Lobdell Car Wheel Company, circa 1830
Christiana Avenue
Wilmington
New Castle County
Delaware

HAER DE-15

HAER
DEL,
2-WILM,
35-

PHOTOGRAPHS

WRITTEN HISTORICAL AND DESCRIPTIVE DATA

Historic American Engineering Record
National Park Service
Department of the Interior
Washington, D. C. 20240

HAER DEL ,2-WILM,35-

HISTORIC AMERICAN ENGINEERING RECORD

Lobdell Car Wheel Company

HAER DE-15

Location:	Foot of Christiana Avenue, near the confluence of the Brandywine and Christiana Rivers in Wilmington, Newcastle County, Delaware. UTM: 454500.4396350 Quad: Wilmington
Date of Construction:	Company originated circa 1830. Surviving structures date from circa 1880.
Present Owner:	Wilmington Marine Terminal and St. Lawrence Realty Company.
Present Use:	Storage space
Significance:	An important example of heavy industry in Delaware, and at one time, the largest manufacturer of chilled cast-iron wheels in the United States.
Historian:	Christopher S. Derganc, 1976.

It is understood that access to this material rests on the condition that should any of it be used in any form or by any means, the author of such material and the Historic American Engineering Record of the National Park Service at all times be given proper credit.

Company History

From a mere 23 miles of track in 1830, American railroad mileage grew to over 30,000 miles by 1860. [1] This tremendous expansion of the U. S. rail network prior to the Civil War created an unprecedented demand for a new variety of manufactured products. The multitude of new roads contructed during these years required crossties, rails, spikes, locomotives, passenger coaches, freight cars and a vast miscellany of hardware and wood products. Many of these items were initially imported from Great Britain, but America soon developed the industry required to support the rapid expansion of its railroads. [2]

The Lobdell Car Wheel Company of Wilmington, Delaware was one of the first and most successful firms to emerge from the pre-war period. Beginning as a local foundry producing "castings of all types," it became one of the largest manufacturers of a specialty line of chilled cast iron products including, but not limited to, railroad car wheels. [3] [Photos DE-15-1 through 5] It was, ". . .not only one of the largest and oldest manufactories of any kind in Wilmington, but the oldest car wheel establishment in the country, and. . .the best equipped and most complete for making chilled car wheels in the world."[4] Thus, the Lobdell Car Wheel Company not only represented a significant example of Delaware heavy industry, but a vital element in the development of American railroading as well.

Jonathan Bonney, an experienced foundry man and ironworker, cast his first car wheel in 1828 at the Mount Savage Iron Works near Frostburg, Maryland. He did experimental work for the Baltimore and Ohio Railroad and was one of the first to learn the casting of car wheels. Sometime around 1830, Bonney moved to Wilmington and formed a partnership with Charles Bush, one of Wilmington's wealthiest men. Bonney and Bush, located at 2nd and Lombard Streets, sold a custom line of machinery castings and about 10 car wheels per day. [5] The firm at this time employed 15 hands and produced about $20,000 worth of iron castings yearly. [6]

Wilmington proved a fortunate location for the new firm. An early flour milling center, by 1830, although somewhat in decline, Wilmington still provided a viable market for mill machinery castings. Located on a major north-south route, it possessed excellent shipping facilities, plentiful land, abundant pools of capital and labor and some of the most advanced banking and insurance facilities in the nation. [7]

Despite these advantages, Bonney and Bush faced major limitations due to the nature and size of the market. Casting tended to be a geographically restrictive industry, with markets largely confined

to local mills and farms:

> For ambitious ironmasters there were two ways to increase sales. They could widen their coverage of the market for existing products, or they could develop new products for new markets. Bonney and Bush did both. They attempted to sell casting and machinery outside the Wilmington area, and they developed a practical cast-iron wheel to obtain entry into the growing business of supplying railroad equipment. [8]

The firm preferred not to sell in the northern industrial states where competition was stiffest. It concentrated its sales efforts in the South and around Wilmington. Throughout the 1830s, the ". . .sales of castings and machinery to local and southern customers absorbed a majority of the firm's energies." [9] However, the collapse of the Second Bank signalled the beginning of the end for the southern trade. Northern banks were unwilling to accept payments drawn on local southern banks after the removal of the Second Bank's stabilizing influence. Southern notes were often unsalable in Wilmington and had to be discounted at a high rate of interest in Philadelphia. [10] Bonney realized the growing potential of the railroad market, and the poor financial situation only served to hasten the company's retreat from southern trade.

The firm now began a serious effort in this new field; by 1838 Bonney had patented a durable car wheel--a wheel with a hard tread to resist wear, and with soft flanges and hub to resist shocks and permit easy machining:

> It was a one-piece casting with a rim of "chilled iron", and the firm's ability to produce it cheaply and in quantity gave it a head start over many of its competitors. [11]

As the railroad network expanded, Bonney and Bush increasingly specialized in the production of chilled cast iron car wheels. By 1860, the firm was the largest producer of these wheels in the United States. [12]

In 1832 George G. Lobdell, Bonney's orphaned nephew, joined his uncle in Wilmington as an ironmaster's apprentice. He immediately displayed a great deal of aptitude for the business and was soon in charge of the foundries and machine shops. Bonney died in 1838 and Lobdell, at 21, assumed Bonney's interest in the firm, now known as Bonney and Lobdell. Lobdell became the practical head of the business; he supervised all production and sales and conducted a comprehensive research program:

> Specialization on a single product permitted Lobdell to carry on research which produced a wide variety of wheels embodying a series of technical improvements. The firm developed an extensive line of railroad wheels and locomotive tires that met the requirements of rapidly multiplying types of rolling stock. [13]

The existing facilities were soon outgrown by rapid development in this new field, and in 1844 a new site was purchased at the foot of Pine Street on the Christiana Hundred. [Photo DE-15-6] Plant capacity was 150 wheels per day, with about 50 fitted to axles utilizing a hand screw press. [14]

In 1854 fire destroyed this foundry and a new one was soon constructed on the same site with an increased capacity of 200 wheels per day. An hydraulic press was introduced at this time allowing 80 wheels per day to be fitted to axles. Bush died in 1855, and Lobdell continued in partnership with the Bush family until 1859, when he assumed complete control. In 1867 he incorporated the firm as the Lobdell Car Wheel Company. [Photo DE-15-7]

Production capacity had increased to over 250 wheels per day with an annual value of over $500,000. The firm now employed 200 persons and had a capital value of $200,000. [15] Steady growth continued, and in 1882 a new and final plant was erected on approximately 16 acres at the confluence of the Branydwine and Christiana Rivers. The plant had a capacity of 500 wheels per day. [Photo DE-15-8]

The foundry building at this new site included a chilled roll shop, [Photos DE-15-9, 10] machine shop, pattern shop, a number of railroad sidings, wharves and a canal from the Christiana River to facilitate raw material receipt and product shipment. [16] Further, during this period extensive properties, including ". . . two charcoal [iron] blast furnaces and about ten thousand acres of ore, wood and farming land. . ." were purchased in Virginia and ". . .about five thousand acres of timber and farming land" in North Carolina. [17] Until the early 20th century, when Lake Superior iron became readily available, the company continued to procure raw materials from its southern properties when necessary to meet production requirements.

By 1912 Lobdell turned out 700 wheels per day for horse cars, street cars, electric railways, mine cars and overhead cranes. The firm now employed over 300 workers and had the largest melting capacity in Wilmington. Each of its two 84-inch diameter cupolas could melt 15 tons of iron per hour. [18] Control of the firm had passed to Lobdell's son William in 1894. Upon his death in 1914, George Jr. assumed the presidency. Prosperity continued through the First World War; Lobdell's capital value was estimated at over $1,000,000 in 1918. [19] But the post war period brought the first sustained production decrease in company history. Lobdell Car Wheel failed to show a profit from 1926 to 1940, [Photos DE-15-11, 12, 13, 14] and suffered losses in 1939 and 1940.

Development of a practical steel car wheel and Lobdell's reluctance to shift production emphasis to this new and better product precipitated the company's downfall. The Depression of the

'30s severely crippled the railroads, Lobdell's principal market and exacerbated the situation. The firm ceased car wheel production in 1940 and soon thereafter dropped "Car Wheel" from its name.

Last ditch attempts at diversification proved dismal and in 1946 the Lobdell Company was sold to Walter H. Lippincott of Conshohoken, Pennsylvania. Lippincott operated the firm until 1949. He sold out to United Engineering and Foundry of Pittsburgh. In February 1950, the foundry machinery and equipment were sold at public auction in Wilmington. The Lobdell site today is owned by the Wilmington Marine Terminal and the St. Lawrence Realty Company, and is utilized primarily as warehouse space.

The history of the Lobdell Car Wheel Company presents an interesting paradox. The firm's fortune was won and ultimately lost on the basis of a single product, the chilled cast iron car wheel. Jonathan Bonney, at the forefront of a new technology in the 1830s, displayed exceptional foresight and skill in adapting to a changing market situation. Loss of the southern machinery business was rather easily overcome as Bonney and Bush entered the promising, yet still fledgling, railroad car wheel market. Concentration upon, and improvement of this one product soon brought the firm to a position of national preeminence in the industry.

Bonney's descendants however, were not blessed with the same daring and foresight. Unable to cope with the constantly shrinking market for chilled cast iron car wheels, the company suffered through 20 years of marginal operation before finally succumbing in 1946. The reasons underlying this failure are by no means clear and much further study must be undertaken before they are fully understood. It is clear, however, that the advent of a cheap homogeneous steel, suitable for railroad car wheels, was the principal factor behind the demise of cast iron wheels.

Why Lobdell failed to make the transition from iron to steel is not certain. The two technologies were not vastly different. They were, in fact, quite similar. It would not have required a large amount of capital to re-tool for steel wheel production, and that transition could have been done gradually while cast iron wheels still held a respectable portion of the market.

Others in the industry were quick to realize the potential of steel in the last 30 years of the 19th century. Experiments with steel wheels were conducted as early as 1872 by A. Whitney and Sons in Philadelphia, less than 30 miles from Wilmington. [20] From 1870 on, the Boston and Albany Railroad employed steel-tired wheels under their passenger equipment. [21] The Boston and Providence Railroad used cast steel wheels under one of the trucks and tender of the locomotive "Daniel Tyler" in 1873, and by 1877 steel wheels were in general use as locomotive drive wheels. [22] In 1887 the

Dickson Manufacturing Company contracted to furnish the Baltimore and Ohio Railroad with the "Boise" steel wheel, already in use on 37 railroads. [23]

The decades after 1870 witnessed a fervent and, at times, hostile debate concerning the relative merits of steel and iron car wheels. Cost (reflected in the cost of manufacture and in useful wheel life) was of primary concern to most. In the 1870s and 1880s iron held a decided advantage over steel in this area. However, with the practical development of the open-hearth process in the 1890s, a steel cheaper and more chemically uniform than even charcoal iron became readily available. In practice, a very small portion of cast iron wheels had been evenly chilled, and this led to defects within the iron which caused cracks or flat spots on the wheel tread (which in turn damaged the softer rails). The open-hearth process permitted precise control of the chemical composition of steels and resulted in wheels that were slightly softer than rails. This prolonged rail and wheel life. [24]

Advances in other fields of railroad technology, particularly the introduction of the Westinghouse air brake, hastened the demise of chilled cast iron wheels. Faster trains carrying heavier loads in the late 19th century placed increased stress upon the wheels, stress which cast iron wheels often were unable to handle:

> The cost was far less for iron wheels, but they failed to wear as well as the steel wheels, and were considered by many to be less safe, hence the use of steel wheels in increasing numbers under passenger cars as the century drew to a close. The controversy was still raging as late as 1899. [25]

By 1913 the controversy seemed to have subsided somewhat as the Committee on Car Wheels of the Master Car Builder's Association established specifications for wrought steel wheels. [26] Steel wheels, with a greater margin of safety, were regularly employed under passenger cars in the early 20th century, but many freight roads still used chilled cast iron where personal safety was of less concern.

Throughout this controversy, the Lobdell Company remained wholly committed to chilled cast iron, yet apparently with the realization of steel's eventual triumph. Around the turn of the century, a small steel foundry was constructed on Lobdell property to produce steel street car wheels. For reasons unknown, this venture was soon abandoned. [27] More revealing, however, is the following statement taken from a Lobdell trade catalogue dated 1892:

> In spite. . .of the prophecies of some advocates of steel wheels--that the chilled wheel is doomed--we think the manufacturers of the latter can rest easy in the assurance that, if they will make a good, honest article, their trade will not dwindle into nothingness, for at least several decades to come, although it is probable that, as the price of steel decreases, the steel wheels will be more or less used under the finer passenger coaches and engines. [Author's emphasis.] [28]

Implicitly, at least, Lobdell in 1892 had relinquished eventual victory to steel, yet the company continued to produce chilled cast iron wheels exclusively. W. Stewart Allmond, a descendant of Lobdell and former board member, summarized the situation in his recollection of a 1926 board meeting. Allmond was asked his opinion concerning the state of the company:

> "I think the thing that is wrong is that you are trying to do business in 1926 with the equipment and the ideas of about 50 years ago!" They had been putting nothing into the plant. . . "You've got machinery in the plant that was old 20 years ago. You haven't replaced any. You have no sales organization!" There was a lack of modernizing. [29]

During the interview Allmond continued:

> One of the great troubles then [during the 1920s and 30s] was that our major product was a declining industry. . .We were letting it go without anything to replace it. . .[30]

Summarizing, the Lobdell Car Wheel Company began as a small, innovative firm based on the development of a new and extremely successful car wheel. The company grew vigorously for several decades, becoming a large and very conservative manufacturer primarily concerned with maintenance of the status quo. Eventually, chilled cast iron wheels were replaced by those of steel. Lobdell did not adapt to this changing market situation and consequently failed.

Charcoal Iron and the Technology of The Chilled Iron Wheel

As a manufacturer of railroad car wheels, Lobdell was faced with a dichotomy:

> . . .the plates and hub of the wheel must be. . .soft enough to be bored or machined, while the tread is so hard that the finest tempered file will not affect it. [31]

The wheel tread had to resist wear and maintain a true round, while the plates and hub had to withstand the extreme transverse shocks generated by the train's motion. Until the advent of a practical

steel wheel, "chilled" cast iron wheels were the industry standard under locomotives as well as passenger and freight cars. In 1895 there were over 100 establishments in this country producing over 1,000,000 chilled cast iron car wheels annually; and as late as 1958 it was estimated that fifty percent of the wheels under freight cars were made of chilled cast iron. [32]

Iron is generally cast in sand, a relatively poor conductor of heat. Pig iron, from which cast iron is made, contains between 2.5% and 5% carbon in the form of iron carbide or cementite (Fe_3C), in chemical composition with the iron. If molten pig iron is allowed to cool slowly in a sand mold, some carbon (the amount depends upon the rate of cooling) separates from the iron and forms 3-dimensional "flakes" of graphite within the iron matrix. This type of cast iron, known as gray cast iron, is relatively soft and easily machined. Conversely, a fast cooling of molten pig iron prevents the separation of carbon, and produces a hard, crystalline structure. Known as white cast iron, it possesses excellent cleavage (the direct separation of the material along crystallographic planes known as cleavage planes) and, as such, is quite brittle.

Gray cast iron was well suited as a material for the hub and plate sections of a car wheel, but far too plastic for the tread. In order to achieve hardness in the wheel tread, Lobdell and other wheel manufacturers placed a metallic rim, or "chill", around the outer edge of the wheel mold. This chill, a relatively good conductor of heat, caused the outer section of the cast to freeze (solidify) more rapidly than that in contact with the sand, producing an outer edge of white cast iron.

> In this way, a cementitic structure about 1/2 inch thick (the tread) and free of graphite is obtained which provides wear resistance. The composition is such that the structure of the hub and web (plates), which are not chilled, consists of graphite and pearlite. A narrow mottled zone exists at the junction of white and gray structures and consists of a mixture of graphite and iron carbide in a pearlite matrix. [33]

The quality of the iron utilized in the above process was of the utmost importance in the production of long-wearing wheels, because most manufacturers melted the pig down without additional refining. The Lobdell Car Wheel Company used, almost exclusively, cold blast charcoal pig in its castings:

> It is sufficient to say that our long experience (over 55 years) had taught us that, as a rule, charcoal irons will chill better than anthracite or coke irons of the same grades, and that cold blast charcoal irons will chill better than warm blast irons of the same grade. [34]

Charcoal iron chilled well because it was generally low in silicon and other elements that tended to induce graphitization. [35]

Charcoal irons were, however, expensive. Its price in 1872 was about fifty percent higher than for other types of iron. And charcoal's inherent fragility mitigated large-scale production. Furnaces were rarely taller than 35 feet, while those fueled with coke were often as tall as 100 feet.[36] But perhaps the most irksome problem faced by charcoal ironmasters was merely obtaining sufficient quantities of charcoal at moderate prices. Furnaces were located deep in woodlands, close to charcoal and iron supplies, but far from potential markets. [37]

Yet the superior quality of most charcoal irons, made from high-grade ore and a very pure fuel, kept demand high. Although in relative decline since 1855, vis-a-vis coke or anthracite irons, charcoal iron production continued to increase until about 1890: [38]

> The survival of charcoal iron-making was due to the quality of the product. . . .Customers cheerfully paid the higher cost of charcoal iron in order to be sure of securing castings and forgings of a better quality. Its chief markets were foundries making car wheels and malleable castings. [39]

These markets remained viable through the first quarter of the twentieth century when, as a result of increased competition from steel as well as other types of iron, they finally gave way.

The casting of chilled charcoal-iron wheels itself of considerable interest and is described in detail below. The following refers to Figure 1 [40], a cross-section of the Washburn-Attwood wheel mold. This mold, along with Lobdell's, was extensively used in the late 19th century. (See page 16.)

AA is the chill mold--that part of the mold which the outer wheel tread comes into contact with, and which produces the chilling effect. It is constructed of iron, accurately turned on the inside to the form of the tread and flange sections of the wheel. The chill mold is first inverted from the position shown and wooden patterns, from which the wheel is cast, are laid into it.

Sand is then forced into B, the nowell, and on top of the wheel pattern. The nowell, or underside of the mold, is attached to the mold proper by pins and lugs, CC. A "bottom board" is next placed over the nowell and the entire assembly is inverted and set resting on the board.

The cope DD is then fastened to the chill mold by a series of bolts. The cope is constructed with a hollow cylinder, E, in the center, riveted to its outer rim by 10 radial arms, 2-1/2 inches thick and 3/8 inches apart. Sand is then rammed between the radial arms and into the cylinder, leaving 3 holes or spews, about 1-1/4 inches in diameter.

The entire mold is then again inverted, the nowell taken off and the wooden patterns removed. The nowell is replaced and the mold is returned to the position shown, ready to receive molten iron through the spews left in the sand.

Double plate wheels (that is, wheels with 2 plates cast between the hub and tread) require a curve, FF, to be laid into the mold, held into position by 3 small iron pins or chaplets, G, and 3 projections on the core, H.

Notes

[1] Stover, John F., American Railroads. Chicago, University of Chicago Press, 1961, pp. 264, 266.

[2] Livesay, Harold C., "The Lobdell Car Wheel Company: 1830-1867", Business History Review, vol. XLII, no. 2, Summer, 1968. p. 171.

[3] Clark, Victor S., History of Manufacturers in the United States, vol. I. New York, Peter Smith, 1949. p. 505. Lincoln, Anna T., Wilmington, Delaware: Three Centuries Under Four Flags. Rutland, Vermont, Tuttle Publishing Company, 1937. p. 258.

Other products manufactured by Lobdell included chilled rolls for paper makers, rubber, flour and rolling mills; the machinery used to produce these rolls; and miscellaneous castings by special order.

[4] Scharf, J. Thomas, History of Delaware. Philadelphia, L. J. Richards and Co., p. 775.

[5] Association of Manufacturers of Chilled Car Wheels, Historical Sketch of the Lobdell Car Wheel Company, 1836-1936, np, nd.

[6] McLane, Louis, Documents Relative to the Manufactures in the United States, vol II. New York, Augustus M. Kelley, 1969. p. 735.

[7] Livesay, "Lobdell," pp. 173-174.

[8] Ibid., p. 174.

[9] Ibid., p. 176.

[10] Ibid., p. 77

[11] Ibid., p. 178.

[12] Clark, Manufactures, vol. I, p. 505; Lincoln, Wilmington, p. 258.

[13] Livesay, "Lobdell," p. 180.

[14] Scharf, Delaware, p. 776.

[15] Conrad, Henry C., History of the State of Delaware, vol. I Wilmington, H. C. Conrad, 1908. p. 374.

[16] Scharf, Delaware, p. 776.

[17] Conrad, History, p. 374.

Bonney and Bush initially purchased their iron directly from local furnaces, but by 1840 Lobdell needed larger quantities and began buying iron from a commission merchant in Philadelphia. The acquisition of these southern properties in the 1880s gave the firm control of its own source of raw materials.

[18] Taped interview with S. Stewart Allmond by John Scafidi and Faith Pizor, 10 June 1969 and 1 July 1969, deposited at the Eleutherian Mills Historical Library, Wilmington, Delaware. pp. 6, 13.

[19] Thomas' Register of American Manufacturers. New York, Thomas Publishing Company, 1918. p. 497.

[20] Railroad Gazette, New York, S. Wright, Dunning and M.N. Forney, 20 April 1872. p. 175.

[21] Ibid., 29 January 1887. p. 62.

[22] Ibid., 18 April 1884, p. 305; 12 January 1877, pp. 16-17.

[23] Ibid., 4 February 1887, p. 80.

[24] Tyler, The Charcoal Iron Industry in Decline, 1855-1925. Unpublished M. A. thesis, University of Delaware, 1967. p. 48.

[25] Ibid.,p. 45.

[26] Ibid., p. 49.

[27] Allmond interview, pp. 7-8.

[28] Lobdell Car Wheel Company, Car Wheels Manufactured by the Lobdell Car Wheel Company. Philadelphia, Allen, Lane and Scott, 1892. p. 11.

[29] Allmond interview, p. 38.

[30] Ibid., p. 42.

[31] Lobdell, William W., Chilled Cast Iron Car Wheels, Association of Manufacturers of Chilled Cast Iron Car Wheels, 1895. p. 9.

[32] Ibid.,p. 5; Lobdell Car Wheel Company, Car Wheels Manufactured by the Lobdell Car Wheel Company, p. 12; Tyler, The Charcoal Industry.

[33] Gagnebin, Albert P., The Fundamentals of Iron and Steel Castings. International Nickel Company, Inc., 1957. p. 57.

[34] Lobdell Company, Car Wheels, p. 1.

[35] Heine, Richard W., Principles of Metal Casting. New York, McGraw-Hill, 1967. p. 495.

[36] Tyler, Charcoal Iron, pp. 19, 40. Some charcoal furnaces reached as high as 60 feet, but this was the exception rather than the rule.

[37] Ibid., p. 21.

[38] Ibid., p. 1.

[39] Clark, Manufactures, vol. II, p. 150.

[40] The description and Figure 1 taken from the Railroad Gazette, 23 November 1887. p. 516.

Selected Bibliography

Books

Brandt, D. J. O., The Manufacture of Iron and Steel. London, English Universities Press, Ltd., 1953.

Clark, Victor S., History of Manufactures in the United States. 3 volumes, New York, Peter Smith, 1949.

Conrad, Henry C., History of the State of Delaware, 3 volumes, Wilmington, H. C. Conrad, 1908.

Edwards, Richard, ed., Industries of Delaware, Wilmington, Richard Edwards, 1880.

Gagnebin, Albert P., The Fundamentals of Iron and Steel Castings. International Nickel Company, Inc., 1957.

Heine, Richard W., Principles of Metal Casting. New York, McGraw-Hill, 1967.

Lincoln, Anna T., Wilmington, Delaware: Three Centuries Under Four Flags, Portland, Vermont, Tuttle Publishing Company, 1937.

Longden, Edward, Densening and Chilling in Foundry Work. Charles Griffin and Company Ltd., 1954.

Moldenke, Richard, Charcoal Iron. Lime Rock, Connecticut, Salisbury Iron Corporation, 1920.

Scharf, J. Thomas, History of Delaware. Philadelphia, L. J. Richards and Company, 1888.

Thomas' Register of American Manufacturers. New York, Thomas Publishing Company, 1918.

Articles

Livesay, Harold C., "The Lobdell Car Wheel Company: 1830-1867," Business History Review, vol. XLII, no. 2, Summer, 1968.

Very complete and well researched work on the early history of the Lobdell Car Wheel Company--utilized extensive material from the 70,000 item collection of the Lobdell Company Papers at the Pennsylvania Historical Society, Philadelphia, Pennsylvania.

Pamphlets

Association of Manufacturers of Chilled Car Wheels, Historical Sketch of the Lobdell Car Wheel Company, 1836-1936. nd, np.

Lobdell, William W., Cast Iron Chilled Car Wheels. Association of Manufacturers of Chilled Cast Iron Car Wheels, 1895.

Periodicals

Railroad Gazette, New York, S. Wright, Dunning and M. N. Forney, various dates.

Trade Catalogues

Lobdell Car Wheel Company, Car Wheels Manufactured by the Lobdell Car Wheel Company. Philadelphia, Allen, Lane and Scott, 1892.

Unpublished

Lewis, David W., The Making of Iron and Steel, unpublished research report for the Eleutherian Mills Historical Library, nd.

Sinclair, Bruce, Delaware Industries: A Survey 1820-1860. Eleutherian Mills Historical Library report, 1958.

Tyler, John D., The Charcoal Iron Industry in Decline, 1855-1925. Unpublished M.A. thesis, University of Delaware, 1967.

Taped interview with W. Steward Allmond by John Scafidi and Faith Pizor, 10 June 1969 and 1 July 1969, typewritten manuscript deposit at Eleutherian Mills-Hagley Library.

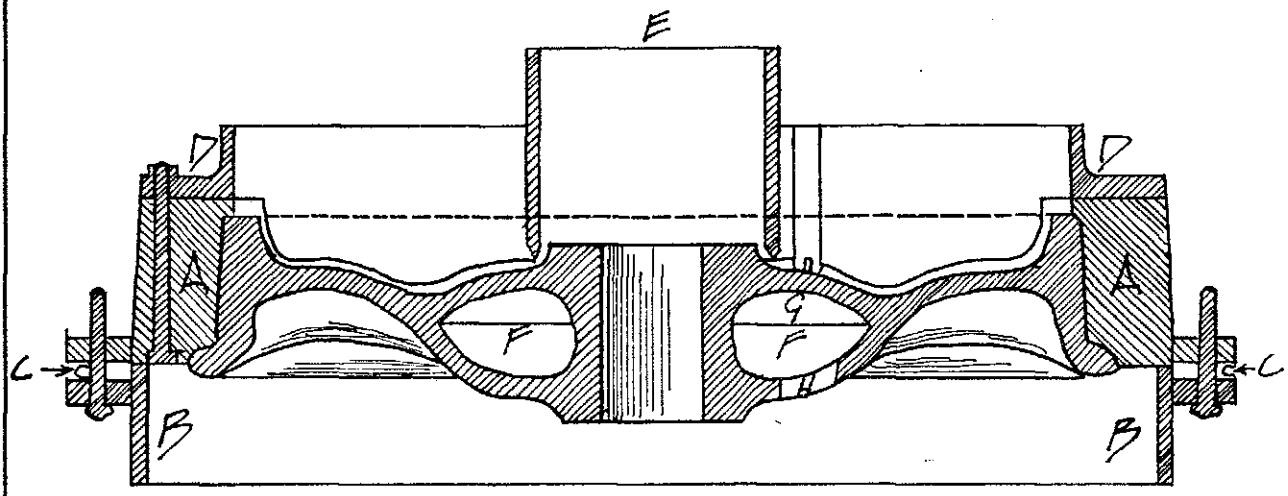

FIGURE 1