Vol. 44—No. 33
2-15-79
PAGES
9733-10037

# federal register

THURSDAY, FEBRUARY 15, 1979

## highlights

**HAZARD WARNING LABELS**

DOT/MTB restates color standards for labels printed directly on surfaces of packagings used in transportation; effective 3-19-79 ..... 9756

**INDUSTRIAL, SCIENTIFIC, AND MEDICAL EQUIPMENT**

FCC revises proposal governing measuring and determining compliance with technical specifications; comments by 5-1-79 and reply comments by 6-1-79 ..... 9771

**MIGRATORY BIRD HUNTING**

Interior/FWA proposes 1979-80 rules for hunting seasons, daily bag and possession limits, and shooting hours for specific species; comments by 5-16-79 (Part II of this issue) ..... 9928

**MEDICAID PROGRAM**

HEW/HCFA makes appeals proceedings available to skilled nursing and intermediate care facilities; effective 5-16-79 ..... 9749

**POWER LAWN MOWERS**

CPSC adopts performance requirements and label standards for certain walk-behind mowers; promulgation effective date 2-26-79; performance requirements effective date 12-31-81; label requirements effective date 12-31-79 (Part V of this issue) ..... 9990

CPSC proposes certification requirements for certain walk-behind mowers; comments by 4-16-79 (Part V of this issue) .. 1033

**SECURITIES**

SEC withdraws certain proposals and publishes for comment new proposals concerning tender offers; comments by 3-30-79 (Part IV of this issue) ..... 9956

**TRUTH IN LENDING**

FRS proposes to suspend rule and interpretation dealing with certain open-end accounts secured by consumers' residences; comments by 4-16-79 ..... 9761

**DISABILITY INSURANCE**

HEW/SSA announces availability of draft regulations ..... 9888

**INTRASTATE FARES AND ROUTES**

CAB sets interim policies for routes with intrastate authority and invites comments; effective 2-14-79 (Part III of this issue) . 9940

CAB adopts interim rules and invites comments; comments by 4-16-79, reply comments by 5-7-79 (Part III of this issue) (2 documents) ..... 9953

**EDUCATION/PAPERWORK CONTROL**

HEW publishes list of data acquisition activities for School Year 1979-1980 ..... 9872

CONTINUED INSIDE

## AGENCY PUBLICATION ON ASSIGNED DAYS OF THE WEEK

The following agencies have agreed to publish all documents on two assigned days of the week (Monday/Thursday or Tuesday/Friday). This is a voluntary program. (See OFR notice 41 FR 32914, August 6, 1976.)

| Monday | Tuesday | Wednesday | Thursday | Friday |
|---|---|---|---|---|
| DOT/COAST GUARD | USDA/ASCS | | DOT/COAST GUARD | USDA/ASCS |
| DOT/NHTSA | USDA/APHIS | | DOT/NHTSA | USDA/APHIS |
| DOT/FAA | USDA/FNS | | DOT/FAA | USDA/FNS |
| DOT/OHMO | USDA//FSQS | | DOT/OHMO | USDA/FSQS |
| DOT/OPSO | USDA/REA | | DOT/OPSO | USDA/REA |
| CSA | MSPB*/OPM* | | CSA | MSPB*/OPM* |
| | LABOR | | | LABOR |
| | HEW/FDA | | | HEW/FDA |

Documents normally scheduled for publication on a day that will be a Federal holiday will be published the next work day following the holiday.

Comments on this program are still invited. Comments should be submitted to the Day-of-the-Week Program Coordinator, Office of the Federal Register, National Archives and Records Service, General Services Administration, Washington, D.C. 20408.

***NOTE: As of January 1, 1979, the Merit Systems Protection Board (MSPB) and the Office of Personnel Management (OPM) will publish on the Tuesday/Friday schedule. (MSPB and OPM are successor agencies to the Civil Service Commission.)**

federal register

Area Code 202 · Phone 523-5240

Published daily, Monday through Friday (no publication on Saturdays, Sundays, or on official Federal holidays), by the Office of the Federal Register, National Archives and Records Service, General Services Administration, Washington, D.C. 20408, under the Federal Register Act (49 Stat. 500, as amended; 44 U.S.C., Ch. 15) and the regulations of the Administrative Committee of the Federal Register (1 CFR Ch. I). Distribution is made only by the Superintendent of Documents, U.S. Government Printing Office, Washington, D.C. 20402.

The FEDERAL REGISTER provides a uniform system for making available to the public regulations and legal notices issued by Federal agencies. These include Presidential proclamations and Executive orders and Federal agency documents having general applicability and legal effect, documents required to be published by Act of Congress and other Federal agency documents of public interest. Documents are on file for public inspection in the Office of the Federal Register the day before they are published, unless earlier filing is requested by the issuing agency.

The FEDERAL REGISTER will be furnished by mail to subscribers, free of postage, for $5.00 per month or $50 per year, payable in advance. The charge for individual copies is 75 cents for each issue, or 75 cents for each group of pages as actually bound. Remit check or money order, made payable to the Superintendent of Documents, U.S. Government Printing Office, Washington, D.C. 20402.

There are no restrictions on the republication of material appearing in the FEDERAL REGISTER.

## INFORMATION AND ASSISTANCE

Questions and requests for specific information may be directed to the following numbers. General inquiries may be made by dialing **202-523-5240.**

**FEDERAL REGISTER,** Daily Issue:

| | |
|---|---|
| Subscription orders (GPO) | 202-783-3238 |
| Subscription problems (GPO) | 202-275-3054 |
| "Dial - a - Reg" (recorded summary of highlighted documents appearing in next day's issue). | |
| Washington, D.C. | 202-523-5022 |
| Chicago, Ill | 312-663-0884 |
| Los Angeles, Calif | 213-688-6694 |
| Scheduling of documents for publication. | 202-523-3187 |
| Photo copies of documents appearing in the Federal Register. | 523-5240 |
| Corrections | 523-5237 |
| Public Inspection Desk | 523-5215 |
| Finding Aids | 523-5227 |
| **Public Briefings: "How To Use the Federal Register."** | 523-5235 |
| **Code of Federal Regulations (CFR)** | 523-3419<br>523-3517 |
| Finding Aids | 523-5227 |

**PRESIDENTIAL PAPERS:**

| | |
|---|---|
| Executive Orders and Proclamations. | 523-5233 |
| Weekly Compilation of Presidential Documents. | 523-5235 |
| Public Papers of the Presidents | 523-5235 |
| Index | 523-5235 |

**PUBLIC LAWS:**

| | |
|---|---|
| Public Law numbers and dates | 523-5266<br>523-5282 |
| Slip Law orders (GPO) | 275-3030 |
| U.S. Statutes at Large | 523-5266<br>523-5282 |
| Index | 523-5266<br>523-5282 |
| **U.S. Government Manual** | 523-5230 |
| **Automation** | 523-3408 |
| **Special Projects** | 523-4534 |

---

## HIGHLIGHTS—Continued


**FIRE SUPPRESSION ASSISTANCE**

HUD/FDAA proposes amendments to cost reimbursement policies; comments by 4-16-79 ..... 9770

**CRIMINAL VIOLENCE**

Justice/LEAA solicits preliminary research proposals for grants; submissions due by 4-13-79 ..... 9813

**SUGAR**

USDA/CCC permits processors to substitute New Crop Sugar for Loan Sugar; effective 1-24-79 ..... 9733

**AIR BRAKE SYSTEMS**

DOT/NHTSA solicits views regarding new standards for trucks, buses, and trailers; comments by 4-16-79, applications for financial assistance in preparation of comments by 3-7-79. 9783

**OIL, GAS AND SULFUR OPERATIONS IN THE OUTER CONTINENTAL SHELF**

Interior/GS announces public hearings on 2-27, 3-1, and 3-5-79 ..... 9771

**MEETINGS—**

Commerce/NOAA: National Marine Fisheries Service, Marine Fisheries Advisory Committee and three subcommittees, March 1979 ..... 9794

NTIA: U.S. INMARSAT Preparatory Committee Working Group, 3-13-79 ..... 9794

CRC: Colorado Advisory Committee, 3-3-79 ..... 9793

Massachusetts Advisory Committee, 3-7-79 ..... 9794

West Virginia Advisory Committee, 3-1-79 ..... 9794

DOD/Air Force: Scientific Advisory Board Ad Hoc Committee on Space Defense, 3-12 and 3-13-79 ..... 9795

Scientific Advisory Board Ad Hoc Committee on Turbine Engine Monitoring Systems, 3-5 and 3-6-79 ..... 9795

Secy: Defense Science Board Task Force on ECM, 3-9-79 ..... 9795

DOE: National Energy Extension Service Advisory Board, and the Ad Hoc Subcommittee, 3-6 and 3-7-79 ..... 9795

HEW: Office of Assistant Secretary for Health, Advisory Committees, March 1979 ..... 9868

NFAH: National Council on the Arts, Expansion Arts Advisory Panel, 3-6, 3-7, and 3-8-79 ..... 9813

National Council on the Arts, Folk Arts Advisory Panel, 3-8, 3-9, and 3-10-79 ..... 9814

NRC: Advisory Committee on Reactor Safeguards, Subcommittee on Anticipated Transients Without Scram, 3-2-79. 9814

**SUNSHINE ACT MEETINGS** ..... 9889

**SEPARATE PARTS OF THIS ISSUE**

Part II, Interior/FWS ..... 9928

Part III, CAB ..... 9940

Part IV, SEC ..... 9956

Part V, CPSC ..... 9990

# contents


**AGRICULTURAL MARKETING SERVICE**

**Rules**

Oranges (navel) grown in Ariz. and Calif ..... 9733

**Proposed Rules**

Milk marketing orders:
Tennessee Valley ..... 9761

**AGRICULTURE DEPARTMENT**

*See* Agricultural Marketing Service; Commodity Credit Corporation.

**AIR FORCE DEPARTMENT**

**Notices**

Meetings:
Scientific Advisory Board (2 documents) ..... 9795

**ALCOHOL, DRUG ABUSE, AND MENTAL HEALTH ADMINISTRATION**

**Notices**

Confidentiality authorization:
Mental health research; Kent State University employees.. 9868
Mental health research; University of California employees ..... 9868

**ARMY DEPARTMENT**

**Rules**

Recruiting and enlistments ..... 9745

**ARTS AND HUMANITIES, NATIONAL FOUNDATION**

**Notices**

Meetings;
Expansion Arts Advisory Panel ..... 9813
Folk Arts Advisory Panel ..... 9814

**CIVIL AERONAUTICS BOARD**

**Rules**

Policy statements:
Airline Deregulation Act of 1978; preemption provisions implementation; interim ..... 9948
Intrastate fare levels, domestic; interim suspension policy ..... 9940

**Proposed Rules**

Policy statements:
Airline Deregulation Act of 1978; preemption provisions implementation; inquiry ..... 9953
Intrastate fare increases, domestic; suspension policy; inquiry ..... 9953

**Notices**

Hearings, etc.:
Air Haiti, S. A ..... 9787
Ontario Worldair Ltd ..... 9789
Travelair AG ..... 9791

**CIVIL RIGHTS COMMISSION**

**Notices**

Meetings; State advisory committees:
Colorado ..... 9793
Massachusetts ..... 9794
West Virginia ..... 9794

**COMMERCE DEPARTMENT**

*See* National Oceanic and Atmospheric Administration; National Telecommunications and Information Administration.

**Notices**

Semi-annual agenda of regulations; postponement of publication date ..... 9795

**COMMODITY CREDIT CORPORATION**

**Rules**

Loan and purchase programs:
Sugar ..... 9733

**COMMUNITY SERVICES ADMINISTRATION**

**Rules**

Grantees; funding:
Authority delegation to Regional Directors for grant and contract making; determination criteria ..... 9753

**CONSUMER PRODUCT SAFETY COMMISSION**

**Rules**

Lawn mowers, walk-behind power; safety standards ..... 9990

**Proposed Rules**

Lawn mowers, walk-behind power; safety standards; certification requirements ..... 1033

**DEFENSE DEPARTMENT**

*See also* Air Force Department; Army Department.

**Notices**

Meetings:
Science Board Task Forces ..... 9795

**ECONOMIC REGULATORY ADMINISTRATION**

**Notices**

Consent orders:
Wood Oil Co ..... 9796

**ENERGY DEPARTMENT**

*See also* Economic Regulatory Administration; Federal Energy Regulatory Commission.

**Notices**

Meetings:
National Energy Extension Service Advisory Board ..... 9795

**FEDERAL AVIATION ADMINISTRATION**

**Rules**

Airport security; law enforcement compliance record requirements; notification of OMB approval and effective date ..... 9744
Airworthiness directives:
Beech ..... 9740
Boeing ..... 9735
Britten-Norman Ltd ..... 9737
Embraer ..... 9740
Gulfstream American Corp ..... 9738
Hiller Aviation ..... 9739
Standard instrument approach procedures ..... 9742
Transition areas ..... 9742
VOR Federal airways ..... 9741

**Proposed Rules**

Airworthiness directives:
Fokker (2 documents) ... 9763, 9764
Control zone and transition area ..... 9765
Transition areas (5 documents) ..... 9765-9768
VOR Federal airways; withdrawal ..... 9769

**Notices**

Active Beacon Collision Avoidance System (BCAS); proposed National Aviation Standard; inquiry; amendments ..... 9822

**FEDERAL COMMUNICATIONS COMMISSION**

**Rules**

Conduct standards; outside activity or employment ..... 9754

**Proposed Rules**

Communications equipment:
Industrial, scientific, and medical equipment; procedures for measuring and determining compliance ..... 9771
Radio services; special:
Maritime services; separation of handheld pilot radio equipment from ship station equipment ..... 9782

**Notices**

Hearings, etc.:
TRT Telecommunications Corp. et al. ..... 9796

**FEDERAL DISASTER ASSISTANCE ADMINISTRATION**

**Proposed Rules**

Fire suppression; cost reimbursement eligibility ..... 9770

**Notices**

Disaster and emergency areas:
New Mexico ..... 9804

FEDERAL ENERGY REGULATORY COMMISSION

Notices

Meetings; Sunshine Act ..... 9889

FEDERAL INSURANCE ADMINISTRATION

Proposed Rules

Flood elevation determinations:
Mississippi, correction ..... 9770

FEDERAL MINE SAFETY AND HEALTH REVIEW COMMISSION

Notices

Meetings; Sunshine Act ..... 9889

FEDERAL RAILROAD ADMINISTRATION

Notices

Petitions for exemptions, etc.:
Massena Terminal Railroad Co. ..... 9824

FEDERAL RESERVE SYSTEM

Proposed Rules

Truth-in-lending (Regulation Z):
Right of rescission; open end credit plans; interpretation; suspension ..... 9761

Notices

Applications, etc.:
Cuba Bancorporation ..... 9804
Gary-Wheaton Corp. ..... 9804

FISH AND WILDLIFE SERVICE

Rules

Fishing:
Quivira National Wildlife Refuge, Kans ..... 9760

Proposed Rules

Migratory bird hunting:
Seasons, limits, and shooting hours, establishment, etc ..... 9928

GEOLOGICAL SURVEY

Proposed Rules

Outer Continental Shelf, oil and gas operations:
Hearings ..... 9771

Notices

Outer Continental Shelf; oil, gas, and sulphur operations:
Halogenated phenols; proposed ban on use; inquiry ..... 9813

HEALTH, EDUCATION, AND WELFARE DEPARTMENT

*See also* Alcohol, Drug Abuse, and Mental Health Administration; Health Care Financing Administration; Public Health Service; Social Security Administration.

Notices

Paperwork control procedures; education data acquisition activities for school year 1979-80; list ..... 9872

HEALTH CARE FINANCING ADMINISTRATION

Rules

Medical assistance programs (Medicaid):
Skilled nursing and intermediate care facility services; appeals proceedings for denial, termination or nonrenewal of certifications and provider agreements ..... 9749

HOUSING AND URBAN DEVELOPMENT DEPARTMENT

*See* Federal Disaster Assistance Administration; Federal Insurance Administration.

IMMIGRATION AND NATURALIZATION SERVICE

Rules

Students, nonimmigrant; admission for duration of status; correction ..... 9734

INTERIOR DEPARTMENT

*See* Fish and Wildlife Service; Geological Survey; Land Management Bureau; Reclamation Bureau.

INTERSTATE COMMERCE COMMISSION

Notices

Fourth section applications for relief (2 documents) ..... 9841
Motor carriers:
Permanent authority applications ..... 9824
Temporary authority applications (2 documents) ..... 9844, 9850
Transfer proceedings ..... 9841
Petitions, applications, finance matters (including temporary authorities), railroad abandonments, alternate route deviations, and intrastate applications ..... 9857
Railroad operation, acquisition, construction, etc.:
Chessie System, Inc., et al ..... 9839
Seacoast Transportation Co ..... 9841

JUSTICE DEPARTMENT

*See also* Immigration and Naturalization Service; Law Enforcement Assistance Administration.

Rules

Organization, functions, and authority delegations:
Assistant Attorney General, Land and Natural Resources Division; responsibilities under the Uranium Mill Tailings Radiation Control Act; correction ..... 9744

Notices

Pollution control; consent judgments; U.S. versus listed companies, etc.:
Corporacion Azucarera de Puerto Rico ..... 9813

LAND MANAGEMENT BUREAU

Notices

Applications, etc.:
New Mexico (3 documents) ..... 9806
Wyoming (14 documents) ..... 9808–9812
Motor vehicles, off-road, etc.; area closures:
Oregon ..... 9807
Survey plat filings:
Arizona ..... 9805
Wilderness areas; characteristics, inventories, etc.:
California; Alaska natural gas transmission system, western leg ..... 9807
New Mexico; workshop schedule ..... 9807
Wyoming ..... 9812
Wilderness management policy and guidelines:
Nevada ..... 9808
Withdrawal and reservation of lands, proposed, etc.:
Nevada ..... 9805
New Mexico; correction ..... 9806

LAW ENFORCEMENT ASSISTANCE ADMINISTRATION

Notices

Grants solicitation, competitive research:
Criminal violence; correlates, causes, and control ..... 9813

MANAGEMENT AND BUDGET OFFICE

Notices

Agency forms under review (2 documents) ..... 9815, 9816

MATERIALS TRANSPORTATION BUREAU

Rules

Hazardous materials:
Label and placard colors on packaging ..... 9756

NATIONAL HIGHWAY TRAFFIC SAFETY ADMINISTRATION

Proposed Rules

Motor vehicle safety standards:
Air brake systems; advance notice ..... 9783

Notices

Motor vehicle safety standards; exemption petitions, etc.:
International Harvester Corp.; tire selection and rims for vehicles other than passenger cars ..... 9824

NATIONAL OCEANIC AND ATMOSPHERIC ADMINISTRATION

Notices

Meetings:
Marine Fisheries Advisory Committee ..... 9794

NATIONAL TELECOMMUNICATIONS AND INFORMATION ADMINISTRATION

Notices

Meetings:
INMARSAT Preparatory Committee Working Group ..... 9794

NATIONAL TRANSPORTATION SAFETY BOARD

Notices

Meetings; Sunshine Act ..... 9889
Safety recommendations and accident reports; availability, responses, etc ..... 9814

NUCLEAR REGULATORY COMMISSION

Notices

Meetings:
Reactor Safeguards Advisory Committee ..... 9814

POSTAL RATE COMMISSION

Notices

Meetings; Sunshine Act ..... 9889
Rural delivery; plans to close:
Graves Mill, Va.; petition for appeal ..... 9818

POSTAL SERVICE

Notices

Mail classification schedule:
Parcel post; temporary change ..... 9819

PUBLIC HEALTH SERVICE

Notices

Meetings:
Advisory committees; March .. 9868

RECLAMATION BUREAU

Notices

Environmental statements; availability, etc.:
Central Valley Project, Calif .. 9812

SECURITIES AND EXCHANGE COMMISSION

Proposed Rules

Tender offers; filing, delivery, and disclosure requirements, antifraud provisions, etc ..... 9956

Notices

Hearings, etc.:
Dymo Industries, Inc ..... 9819
Entenmann's Inc ..... 9820
Self-regulatory organizations; proposed rule changes:
National Securities Clearing Corp ..... 9820

SOCIAL SECURITY ADMINISTRATION

Notices

Disability insurance benefits and aid programs; draft regulations availability ..... 9888

SMALL BUSINESS ADMINISTRATION

Notices

Applications, etc.:
Central Capital Corp ..... 9821
First American Lending Corp.. 9822

TENNESSEE VALLEY AUTHORITY

Notices

Environmental statements; availability, etc.:
Uranium mining; Edgemont, S. Dak.; hearing ..... 9822

TRANSPORTATION DEPARTMENT

*See also* Federal Aviation Administration; Federal Railroad Administration; Materials Transportation Bureau; National Highway Traffic Safety Administration.

Rules

Conduct standards; employment and financial interest statements, list of employees required to submit ..... 9755

TREASURY DEPARTMENT

Rules

Claims collection; dollar limits on administrative terminations ..... 9745

# list of cfr parts affected in this issue

The following numerical guide is a list of the parts of each title of the Code of Federal Regulations affected by documents published in today's issue. A cumulative list of parts affected, covering the current month to date, follows beginning with the second issue of the month.

A Cumulative List of CFR Sections Affected is published separately at the end of each month. The guide lists the parts and sections affected by documents published since the revision date of each title.


**7 CFR**

907 ..... 9733
1435 ..... 9733

PROPOSED RULES:

1011 ..... 9761

**8 CFR**

214 ..... 9734

**12 CFR**

PROPOSED RULES:

226 ..... 9761

**14 CFR**

39 (6 documents) ..... 9735, 9737-9740
71 (2 documents) ..... 9741, 9742
97 ..... 9742
107 ..... 9744
399 (2 documents) ..... 9940, 9948

PROPOSED RULES:

39 (2 documents) ..... 9763, 9764
71 (7 documents) ..... 9765-9769
399 (2 documents) ..... 9953

**16 CFR**

1205 ..... 9990

**16 CFR—Continued**

PROPOSED RULES:

1205 ..... 1033

**17 CFR**

PROPOSED RULES:

240 ..... 9956

**24 CFR**

PROPOSED RULES:

1917 ..... 9770
2205 ..... 9770

**28 CFR**

0 ..... 9744

**30 CFR**

PROPOSED RULES:

250 ..... 9771
252 ..... 9771

**31 CFR**

5 ..... 9745

**32 CFR**

571 ..... 9745

**42 CFR**

431 ..... 9749
442 ..... 9749

**45 CFR**

1067 ..... 9753

**47 CFR**

19 ..... 9754

PROPOSED RULES:

18 ..... 9771
83 ..... 9782

**49 CFR**

99 ..... 9755
172 ..... 9756

PROPOSED RULES:

571 ..... 9783

**50 CFR**

33 ..... 9760

PROPOSED RULES:

20 ..... 9928


# reminders

(The items in this list were editorially compiled as an aid to FEDERAL REGISTER users. Inclusion or exclusion from this list, has no legal significance. Since this list is intended as a reminder, it does not include effective dates that occur within 14 days of publication.)

## Rules Going Into Effect Today

CAB—Elimination of CAB Form 41 Schedule P-13, "Passenger Revenue and Traffic Data by Type of Fare—48 States".. 3471; 1-17-79

Treasury/Customs—Customs bonds, change of policy relating to foreign landing certificates ..... 59288; 12-19-78

## List of Public Laws

NOTE: No public laws have been received by the Office of the Federal Register for assignment of law numbers and inclusion in today's listing

[Last Listing Jan. 24, 1979]

# CUMULATIVE LIST OF CFR PARTS AFFECTED DURING FEBRUARY

**The following numerical guide is a list of parts of each title of the Code of Federal Regulations affected by documents published to date during February.**


**1 CFR**

Ch. I ..... 6349

**3 CFR**

ADMINISTRATIVE ORDERS:

Presidential Determinations:
No. 79-2 of January 17, 1979 ..... 7103
No. 79-3 of January 22, 1979 ..... 7105

Memorandums:
February 8, 1979 ..... 8861

EXECUTIVE ORDERS:

10973 (Amended by EO 12118) ..... 7939
11958 (Amended by EO 12118) ..... 7939
12117 ..... 7937
12118 ..... 7939

PROCLAMATIONS:

4635 ..... 6347
4636 ..... 6893
4637 ..... 7651
4638 ..... 8859
4639 ..... 9367

**5 CFR**

213 ..... 6705, 8239, 9369
900 ..... 8520

PROPOSED RULES:

720 ..... 8570

**6 CFR**

705 ..... 9585, 9586
706 ..... 9585, 9586

**7 CFR**

270 ..... 8240
271 ..... 8240
277 ..... 8548
282 ..... 8240
401 ..... 7107
724 ..... 7108
726 ..... 7114
781 ..... 7115
905 ..... 6349, 9589
907 ..... 6350, 7941, 9733
910 ..... 6705, 8240
911 ..... 9370
913 ..... 8863
915 ..... 9370
928 ..... 6706
959 ..... 6895
971 ..... 7941
1064 ..... 7653
1065 ..... 7654
1421 ..... 6351, 9371
1435 ..... 9733
1803 ..... 6352
1823 ..... 6353
1888 ..... 6353
1901 ..... 6353
1933 ..... 6353
1942 ..... 6353, 6354
1980 ..... 6354
2880 ..... 9371

PROPOSED RULES:

Ch. IX ..... 7724, 7729, 8880
725 ..... 9389

**7 CFR—Continued**

PROPOSED RULES—Continued

726 ..... 9391
932 ..... 8897
1011 ..... 9761
1133 ..... 8897
1464 ..... 9393
1933 ..... 7971
1951 ..... 8898

**8 CFR**

214 ..... 9734
341 ..... 8240

**9 CFR**

318 ..... 9371

PROPOSED RULES:

78 ..... 8271
318 ..... 6735
381 ..... 6735

**10 CFR**

35 ..... 8242
205 ..... 7922, 8562
210 ..... 7064, 7070
211 ..... 6895, 7064
212 ..... 7070, 9372
456 ..... 6378, 9375
790 ..... 9375

PROPOSED RULES:

Ch. I ..... 8276
50 ..... 7736
210 ..... 7934
211 ..... 7934
212 ..... 7934
516 ..... 9570
790 ..... 8276

**12 CFR**

15 ..... 7118
225 ..... 7120
226 ..... 7942
265 ..... 7120
303 ..... 7122

PROPOSED RULES:

19 ..... 6922
24 ..... 6922
26 ..... 6421
226 ..... 9761
238 ..... 6421
348 ..... 6421
563f ..... 6421
711 ..... 6421

**14 CFR**

11 ..... 6897
39 ..... 6379, 6902, 6903, 9735, 9737-9740
71 ..... 6379, 6904, 7942-7943, 9741, 9742
97 ..... 9742
107 ..... 9744
207 ..... 6645
208 ..... 6645, 9376
212 ..... 6645

**14 CFR—Continued**

215 ..... 6646
221 ..... 9576
223 ..... 9377
244 ..... 6646
249 ..... 6646
252 ..... 7655
291 ..... 7655, 9590
296 ..... 6634
302 ..... 9576
385 ..... 6647
389 ..... 6647
399 ..... 9940, 9948

PROPOSED RULES:

23 ..... 7057
25 ..... 7057
39 ..... 6929, 9763, 9764
71 ..... 6428, 9765-9769
135 ..... 7057
221 ..... 9579
241 ..... 9394
299 ..... 7736
302 ..... 9395, 9579
399 ..... 9953

**15 CFR**

PROPOSED RULES:

30 ..... 7738
922 ..... 6930

**16 CFR**

13 ..... 6380, 7124, 7943, 8866, 9378
1205 ..... 9990

PROPOSED RULES:

13 ..... 7739, 9395, 9398, 9400
1205 ..... 1033

**17 CFR**

150 ..... 7124
239 ..... 7868, 8245
249 ..... 7877
250 ..... 8250
256 ..... 8250
270 ..... 7869, 8247
274 ..... 7868
275 ..... 7877
279 ..... 7878

PROPOSED RULES:

9 ..... 6428
31 ..... 6737
240 ..... 9956

**18 CFR**

270 ..... 7944
803 ..... 8867

PROPOSED RULES:

2 ..... 7971
3 ..... 7740
35 ..... 7744
154 ..... 7744
157 ..... 7740
271 ..... 7971
281 ..... 8900
284 ..... 7976

19 CFR

PROPOSED RULES:
101 ... 8276

20 CFR

PROPOSED RULES:
416 ... 6429

21 CFR

73 ... 7128
81 ... 7128
136 ... 7129
184 ... 6706
193 ... 7944
510 ... 7132
520 ... 7129–7131
522 ... 6707
544 ... 8260
555 ... 7131
556 ... 6707
558 ... 7132
561 ... 7946

PROPOSED RULES:
Subchapter J ... 9542
172 ... 7149
176 ... 7149
182 ... 7149, 9402
184 ... 7149
186 ... 9402
436 ... 9404
1010 ... 7149

23 CFR

140 ... 9379
655 ... 6708
922 ... 6380, 7656

PROPOSED RULES:
652 ... 7979
663 ... 7979

24 CFR

207 ... 8194
213 ... 8194
220 ... 8194
221 ... 7947, 8196
227 ... 8194
231 ... 8194
232 ... 8194
234 ... 8194
236 ... 8194
241 ... 8194
242 ... 8194
244 ... 8194
1914 ... 6381, 6905, 7656, 7658, 7659
1915 ... 6382, 6383, 6907, 6908, 7133
1917 ... 6386–6388, 7660–7694, 8261, 8262

PROPOSED RULES:
201 ... 8900, 9597
280 ... 8901
501 ... 9700
806 ... 9700
1917 ... 6441–6464, 6934–6944, 7150–7176, 8277–8288, 9770
2205 ... 9770

25 CFR

PROPOSED RULES:
258 ... 9598

26 CFR

9 ... 6715
53 ... 7137

PROPOSED RULES:
1 ... 7177, 9404
4 ... 6740
5 ... 6740
7 ... 6740, 9404

27 CFR

240 ... 7139
245 ... 7140

PROPOSED RULES:
4 ... 8288
5 ... 8288
7 ... 8288

28 CFR

0 ... 8868, 9744
4 ... 6890
4a ... 6890
15 ... 9379

PROPOSED RULES:
47 ... 6752

29 CFR

552 ... 6715
1910 ... 7140, 8577
1926 ... 8577

PROPOSED RULES:
402 ... 8294
403 ... 8293, 8294
2520 ... 8294
2530 ... 8294
2618 ... 7178, 9603

30 CFR

75 ... 9379
77 ... 9379
715 ... 6682

PROPOSED RULES:
Ch. II ... 7980
250 ... 9771
251 ... 8302
252 ... 9771

31 CFR

1 ... 7141
5 ... 9745

PROPOSED RULES:
Ch. I ... 8310
14 ... 6753

32 CFR

552 ... 7948
571 ... 9745
644 ... 8184
705 ... 6389
1453 ... 6716

PROPOSED RULES:
552 ... 7183
806b ... 6944

32A CFR

1901 ... 9381
1902 ... 9382
1903 ... 9384

33 CFR

110 ... 6910
117 ... 7950, 7951
127 ... 8869
222 ... 9591

PROPOSED RULES:
110 ... 6956, 8902
117 ... 7981, 8903
127 ... 7982
157 ... 8984
161 ... 6956
164 ... 9035
165 ... 7982

36 CFR

1227 ... 7143

38 CFR

PROPOSED RULES:
21 ... 7745

39 CFR

10 ... 6392
601 ... 8262
3002 ... 7695

PROPOSED RULES:
310 ... 7982
320 ... 7982

40 CFR

15 ... 6910
35 ... 7143
50 ... 8202, 8221
51 ... 8223
52 ... 7711–7713
60 ... 7714
61 ... 7714
65 ... 6911, 7715–7718, 8263
81 ... 6395
85 ... 7718
162 ... 7695
180 ... 7952, 7953
418 ... 9388
440 ... 7953
1502 ... 8264

PROPOSED RULES:
51 ... 8311
52 ... 7780, 8311, 9404
65 ... 6465–6469, 6754, 7184, 7785, 8311, 8313, 8315, 9406, 9603, 9604
81 ... 8909
85 ... 7780
86 ... 6650, 9464
250 ... 7785, 8917, 9407
720 ... 6957

41 CFR

Ch. 101 ... 8264
101-25 ... 7954

PROPOSED RULES:
3-1 ... 7776
3-3 ... 7776
3-4 ... 7776
3-5 ... 7776
3-7 ... 7763
3-11 ... 7776
3-16 ... 7774
3-30 ... 7776
3-50 ... 7776
3-56 ... 7776

**42 CFR**

50 ..... 6716
405 ..... 6912
431 ..... 9749
441 ..... 6717
442 ..... 9749

PROPOSED RULES:

124 ..... 6842
405 ..... 6958
442 ..... 6958
463 ..... 9605

**43 CFR**

18 ..... 7144
405 ..... 6395
3830 ..... 9720
3833 ..... 9720

PROPOSED RULES:

4 ..... 7983
3300 ..... 6471
3800 ..... 6481

**45 CFR**

70 ..... 8265
190 ..... 9388
220 ..... 6718
222 ..... 6718
228 ..... 6718
1067 ..... 6396, 9753

PROPOSED RULES:

86 ..... 8318
114 ..... 9726
116 ..... 7914
116a ..... 7914
1067 ..... 6960

**46 CFR**

221 ..... 7699
310 ..... 7700
502 ..... 9593
509 ..... 8265
512 ..... 6718, 6719
531 ..... 7144
536 ..... 7144

PROPOSED RULES:

30 ..... 9041
32 ..... 9041
34 ..... 9042

**47 CFR**

19 ..... 9754
68 ..... 7955
73 ..... 6721, 6722, 7959, 7960
81 ..... 8872
83 ..... 8872, 8874, 8878
87 ..... 7961

PROPOSED RULES:

1 ..... 6755, 6960
18 ..... 9771
25 ..... 6755
73 ..... 6757, 6758, 7186, 8903
83 ..... 9782
89 ..... 7987
91 ..... 7987
93 ..... 7987
95 ..... 6759
97 ..... 6759

**49 CFR**

Ch. X ..... 8270
25 ..... 7700
99 ..... 9755
171 ..... 6915
172 ..... 9756
173 ..... 6915
571 ..... 6915, 7961

**49 CFR—Continued**

574 ..... 7963
1033 ..... 6416, 6728-6731, 6916-6919, 7964, 8878
1062 ..... 7965
1126 ..... 8879
1201 ..... 9730

PROPOSED RULES:

171 ..... 7989
172 ..... 7989
173 ..... 7989
174 ..... 7989
175 ..... 7989
176 ..... 7989
177 ..... 7989
193 ..... 8142
195 ..... 6961
571 ..... 9783
1033 ..... 6759
1132 ..... 6759

**50 CFR**

20 ..... 7146
26 ..... 6417
32 ..... 6418
33 ..... 6417-6419, 7708, 7969, 9760
602 ..... 7708
651 ..... 6732
653 ..... 7711

PROPOSED RULES:

17 ..... 7060
20 ..... 9928
23 ..... 9690
230 ..... 9608
258 ..... 8905
296 ..... 7777
403 ..... 7777
611 ..... 6761
652 ..... 6961
661 ..... 7988


## FEDERAL REGISTER PAGES AND DATES—FEBRUARY

| *Pages* | *Date* | *Pages* | *Date* |
|---|---|---|---|
| 6347-6704 | Feb. 1 | 8239-8858 | 9 |
| 6705-6892 | 2 | 8859-9365 | 12 |
| 6893-7102 | 5 | 9367-9587 | 13 |
| 7103-7649 | 6 | 9589-9731 | 14 |
| 7451-7935 | 7 | 9733-10037 | 15 |
| 7937-8237 | 8 | | |

# rules and regulations

This section of the FEDERAL REGISTER contains regulatory documents having general applicability and legal effect most of which are keyed to and codified in the Code of Federal Regulations, which is published under 50 titles pursuant to 44 U.S.C. 1510.

The Code of Federal Regulations is sold by the Superintendent of Documents. Prices of new books are listed in the first FEDERAL REGISTER issue of each month.

[3410-02-M]

## Title 7—Agriculture

## CHAPTER IX—AGRICULTURAL MARKETING SERVICE (MARKETING AGREEMENTS AND ORDERS; FRUITS, VEGETABLES, NUTS), DEPARTMENT OF AGRICULTURE

[Naval Orange Regulation 453]

## PART 907—NAVEL ORANGES GROWN IN ARIZONA AND DESIGNATED PART OF CALIFORNIA

### Limitation of Handling

AGENCY: Agricultural Marketing Service, USDA.

ACTION: Final rule.

SUMMARY: This regulation establishes the quantity of fresh California-Arizona navel oranges that may be shipped to market during the period February 16-22, 1979. Such action is needed to provide for orderly marketing of fresh navel oranges for this period due to the marketing situation confronting the orange industry.

EFFECTIVE DATE: February 16, 1979.

FOR FURTHER INFORMATION CONTACT:

Charles R. Brader, (202) 447-6393.

SUPPLEMENTARY INFORMATION: *Findings.* Pursuant to the marketing agreement, as amended, and Order No. 907, as amended (7 CFR Part 907), regulating the handling of navel oranges grown in Arizona and designated part of California, effective under the Agricultural Marketing Agreement Act of 1937, as amended (7 U.S.C. 601-674), and upon the basis of the recommendations and information submitted by the Navel Orange Administrative Committee, established under this marketing order, and upon other information, it is found that the limitation of handling of navel oranges, as hereafter provided, will tend to effectuate the declared policy of the act by tending to establish and maintain such orderly marketing conditions for such oranges as will provide, in the interests of producers and consumers, an orderly flow of the supply thereof to market throughout the normal marketing season to avoid unreasonable fluctuations in supplies and prices, and is not for the purpose of maintaining prices to farmers above the level which it is declared to be the policy of Congress to establish under the act. This regulation has not been determined significant under the USDA criteria for implementing Executive Order 12044.

The committee met on February 13, 1979, to consider supply and market conditions and other factors affecting the need for regulation and recommended a quantity of navel oranges deemed advisable to be handled during the specified week. The committee reports the demand for navel oranges has eased somewhat.

It is further found that it is impracticable and contrary to the public interest to give preliminary notice, engage in public rulemaking and postpone the effective date until 30 days after publication in the FEDERAL REGISTER (5 U.S.C. 553), because of insufficient time between the date when information became available upon which this regulation is based and the effective date necessary to effectuate the declared policy of the act. Interested persons were given an opportunity to submit information and views on the regulation at an open meeting. It is necessary to effectuate the declared purposes of the act to make these regulatory provisions effective as specified, and handlers have been apprised of such provisions and the effective time.

§ 907.753 Navel Orange Regulation 453.

*Order.* (a) The quantities of navel oranges grown in Arizona and California which may be handled during the period February 16, 1979, through February 22, 1979, are established as follows:

(1) District 1: 765,000 cartons;

(2) District 2: 135,000 cartons;

(3) District 3: unlimited movement.

(b) As used in this section, "handled", "District 1", "District 2", "District 3", and "carton" mean the same as defined in the marketing order.

(Secs. 1-19, 48 Stat. 31, as amended; 7 U.S.C. 601-674)

Dated: February 14, 1979.

CHARLES R. BRADER,
*Acting Director, Fruit and Vegetable Division, Agricultural Marketing Service.*

[FR Doc. 79-5193 Filed 2-14-79; 11:50 am]

---

[3410-05-M]

## CHAPTER XIV—COMMODITY CREDIT CORPORATION, DEPARTMENT OF AGRICULTURE

### SUBCHAPTER B—LOANS, PURCHASES, AND OTHER OPERATIONS

[Amendment 5 to the Price Support Loan Program for 1977 Crop Sugar beets and Sugarcane; Amendment 4 to the Price Support Loan Program for 1978 Crop Sugar beets and Sugarcane]

## PART 1435—SUGAR

### Substitution of New Crop Sugar For Loan Sugar

AGENCY: Commodity Credit Corporation, USDA.

ACTION: Final rule.

SUMMARY: This rule permits processors to substitute sugar of a subsequent crop year for 1977 crop or 1978 crop sugar under loan. The required quantity of loan collateral must nevertheless be maintained in approved storage space at all times. Prior permission for substitution must be obtained from the loan-making office.

The current regulations governing the 1977 crop and 1978 crop price support loan programs require a processor to maintain "a quantity of eligible sugar sufficient to cover the loan." Eligible sugar is defined as sugar processed from that part of the 1977 or 1978 crop, as applicable, grown by eligible producers. This restriction prevents the substitution of sugar processed from a subsequent year's crop of sugar beets or sugarcane as collateral for the loan.

The quality of raw cane sugar tends to decline as it remains in storage, and a decline in quality reduces the raw value quantity represented. With refined sugar, quality loss caused by extended storage can require reprocessing and also result in a quantity loss. To the extent that newer crop sugar is substituted by processors for sugar

under loan, losses in quality and quantity of both loan sugar and sugar forfeited to CCC will be minimized. Processors (and producers who share in any processor losses) will be better able to avoid loss by marketing older sugar before it declines in quality. The government will, where loan sugar is forfeited, be more likely to take title to newer sugar which is less subject to declines in quality and resulting losses in quantity.

EFFECTIVE DATE: This amendment shall become effective on January 24, 1979.

FOR FURTHER INFOMATION CONTACT:

Laurence E. Ackland, ASCS, PSD, (202-447-5647); P.O. Box 2415, Washington, D.C. 20013.

SUPPLEMENTARY INFORMATION: Section 902 of the Food and Agriculture Act of 1977 (Pub. L. 95-113, 91 Stat. 949, effective October 1, 1977) amended Section 201 of the Agricultural Act of 1949 to provide that the price of the 1977 and 1978 crops of sugar beets and sugarcane shall be supported through loans or purchases with respect to the processed products thereof.

On November 11, 1977, a final rule was published in the FEDERAL REGISTER (42 FR 58734) implementing a program effective as of November 8, 1977, to support prices in the marketplace for producers of 1977 crop sugar beets and sugarcane through nonrecourse loans made to sugar processors. The price support loan program for the 1977 crop was amended on May 17, 1978 (43 FR 21317), on August 23, 1978 (43 FR 34719), on August 30, 1978 (43 FR 38686), and on October 30, 1978 (43 FR 50409). On November 29, 1978 a final rule implementing an extended 1977 crop sugar loan program was published in the FEDERAL REGISTER (43 FR 55742).

A final rule implementing a price support loan program for the 1978 crop of sugar beets and sugarcane was published in the FEDERAL REGISTER on June 7, 1978 (43 FR 24663). Amendments to the 1978 crop program were published on August 23, 1978 (43 FR 37419), on August 30, 1978 (43 FR 38686), and on October 30, 1978 (43 FR 50410).

The Hawaiian sugar industry has informed the Department that it wishes to remove substantial quantities of 1978 crop loan sugar now located in remote or marginal storage facilities and substitute for such collateral 1979 crop production which is both newer (production began in early January of 1979) and better located. Florida processors wish to complete relocation of 1977 crop loan sugar before loan maturity dates. In some cases where loading newly produced 1978 crop sugar may be more convenient or economical than for the 1977 crop, they may wish to substitute 1978 crop sugar for 1977 crop sugar now under loan.

For substitution provisions to be available to processors in Florida and Hawaii, it is essential that this action be implemented as soon as possible. In view of this situation, and because of the benefit to the government, it is hereby determined that it is impractical and contrary to the public interest to comply with applicable requirements for public rulemaking as provided for by 5 U.S.C. 553 and Executive Order 12044.

This regulation has not been determined significant under the USDA criteria implementing Executive Order 12044.

Accordingly, 7 CFR Part 1435 is amended as follows:

### Subpart—Price support Loan Program for 1977 Crop Sugar beets and Sugarcane

1. Section 1435.22 is amended by revising that portion of paragraph (a)(1) immediately preceding the proviso to read as follows:

**§ 1435.22 Loan maintenance and liquidation.**

(a)(1) *Maintenance of the commodity under loan.* A processor shall maintain in eligible storage a quantity of eligible sugar sufficient to cover the loan except that the processor may substitute other sugar of the same or a subsequent crop year which is of at least equal quantity and quality as the sugar which was originally put under loan, if prior permission is obtained from the loan-making office: * * *

* * * * *

### Subpart—Price Support Loan Program for 1978 Crop Sugar beets and Sugarcane

2. Section 1435.41 is amended by revising that portion of paragraph (a) immediately preceding the provisio to read as follows:

**§ 1435.41 Loan maintenance and liquidation.**

(a) *Maintenance of the commodity under loan.* A processor shall maintain in eligible storage a quantity of eligible sugar sufficient to cover the loan except that the processor may substitute other sugar of the same or a subsequent crop year which is of at least equal quantity and quality as the sugar which was originally put under loan, if prior permission is obtained from the loan-making office: * * *

* * * * *

(Secs. 201 and 401 et seq. of the Argicultural Act of 1949, as amended (7 U.S.C. 1446, 1421 et seq.).)

Signed at Washington, D.C., on February 9, 1979.

BOB BERGLAND,
*Secretary.*

[FR Doc. 79-4941 Filed 2-14-79; 8:45 am]

---

[4410-10-M]

## Title 8—Aliens and Nationality

## CHAPTER I—IMMIGRATION AND NATURALIZATION SERVICE, DEPARTMENT OF JUSTICE

## PART 214—NONIMMIGRANT CLASSES

### Admission of Nonimmigrant Students for Duration of Status; Correction

AGENCY: Immigration and Naturalization Service, Justice.

ACTION: Correction of Final Rule.

SUMMARY: This document is being published in order to correct FR Doc. 78-32739 appearing at pages 54618-21 in the FEDERAL REGISTER of November 22, 1978, by restoring material included in the earlier regulation and inadvertently omitted from the final rule.

FOR FURTHER INFORMATION CONTACT:

James G. Hoofnagle, Jr., Instructions Officer, Immigration and Naturalization Service. Telephone: (202) 633-3048.

SUPPLEMENTARY INFORMATION: In FR Doc. 78-32739 appearing at page 54621 in the FEDERAL REGISTER of November 22, 1978, the first sentence of subparagraph (6a) of § 214.2(f) is corrected by dividing it into two separate sentences to read as follows: "If a student requests permission to accept or continue employment in order to obtain practical training, an authorized school official must certify that the employment is recommended for that purpose and will provide the student with practical training in his field of study and upon information and belief. would not be available to the student in the country of his foreign residence. Permission to accept or continue temporary employment to obtain practical training may be granted in increments of not more than 6 months for a maximum of not more than 12 months in the aggregate."

This material corrects that appearing at lines 35-41 in the first column

of page 56421 of the FEDERAL REGISTER of November 22, 1978.

Dated: February 12, 1979.

LEONEL J. CASTILLO,
*Commissioner of Immigration and Naturalization.*

[FR Doc. 79-4951 Filed 2-14-79; 8:45 am]

---

[4910-13-M]

## Title 14—Aeronautics and Space

## CHAPTER I—FEDERAL AVIATION ADMINISTRATION, DEPARTMENT OF TRANSPORTATION

[Docket No. 78-NW-9-AD; Amdt. 39-3410]

SUBCHAPTER C—AIRCRAFT

## PART 39—AIRWORTHINESS DIRECTIVES

### Boeing Model 727 Series Airplanes

AGENCY: Federal Aviation Administration (FAA), DOT.

ACTION: Final rule.

SUMMARY: This amendment adopts a new airworthiness directive (AD) which requires inspections and/or replacement of main landing gear lock system components on Boeing Model 727 series airplanes whose failure have resulted or could result in a gear-up landing.

EFFECTIVE DATE: March 12, 1979.

ADDRESSES: Boeing Service Bulletins specified in this directive may be obtained upon request to the Boeing Commercial Airplane Company, P.O. Box 3707, Seattle, Washington 98124. These documents may also be examined at FAA Northwest Region, 9010 East Marginal Way South, Seattle, Washington 98108.

FOR FURTHER INFORMATION CONTACT:

Mr. Gerald R. Mack, Airframe Section, ANW-212 Engineering and Manufacturing Branch, 9010 East Marginal Way South, Seattle, Washington 98108; telephone (206) 767-2516.

SUPPLEMENTARY INFORMATION:

#### HISTORY

Failures in the main landing gear lock system on Boeing Model 727 series airplanes have occurred which caused missequencing and subsequent jamming of the gear and wheel well door. Several of these jamming occurrences resulted in gear-up landings. Also, failures have occurred in the main landing gear manual extension system which prevented extension of the landing gear by manual means, resulting in gear-up landings. This service experience and a fatigue evaluation conducted by The Boeing Company indicate that many components in the main landing gear lock system, including several which have not failed in service, must now have life limits.

#### PUBLIC PARTICIPATION

A Notice of Proposed Rule Making (NPRM) was published in the Federal Register (43 FR 17364) on April 24, 1978, proposing an airworthiness directive which would require inspections and/or replacement of main landing gear lock system components on Boeing Model 727 series airplanes to prevent further gear-up landings.

Subsequent to issuance of the NPRM, The Boeing Company notified the FAA of its efforts to develop a design which would prevent jamming of the main landing gear and wheel well doors, upon failure of a lock system component. This design would constitute terminating action for a portion of the proposed AD involving components whose failure can cause a missequencing condition. Based on this information, the comment period was extended to provide time for Boeing to refine the design changes and permit the operators to evaluate the changes prior to making final comments on the NPRM (43 FR 29585, June 30, 1978). On August 31, 1978, Boeing presented the design change to the operators. Following that meeting, it became evident that further time was necessary for an evaluation of the advantages/disadvantages of the changes and, accordingly, the comment period was further extended (43 FR 43312, September 13, 1978). The design consists of a modification/replacement of the door safety bar mechanism.

#### COMMENTS

In response to the proposal, the Air Transport Association of America (ATA) submitted comments on behalf of its member airlines. The majority of the airlines commented that the new safety bar installation under development by Boeing should become terminating action to the applicable portions of the AD and stated their intent to retrofit their aircraft on a long term basis. From discussions with Boeing, it appears that the safety bar modification may be acceptable as terminating action for a major portion of the AD. Final approval, however, is contingent upon completion of substantiating tests and review. Certification is scheduled for mid 1979. If approval is granted, an amendment to the AD will be issued at a later date to include these terminating action provisions. One commentator cited minor errors in the part numbers listed in Table I of the proposed AD. These errors have been corrected. Several commentators stated their objections to the inclusion of lock system components which have not failed in service. The airworthiness requirements applicable to the Model 727 series airplane require the availability of an emergency (alternate) means of extending the landing gear in the event of any reasonably probable failure in the normal extension/retraction system.

The NPRM was issued because the service history has shown that a failure in the normal extension/retraction system can result in an inability to fully extend the landing gear. Therefore, the FAA has determined that all components whose failure can result in a similar condition as that experienced in service must have life limits established to assure compliance with the applicable airworthiness requirements. As an alternate to replacement, upon accumulation of the life limits, the components may be inspected at intervals which have been determined acceptable for assuring continued proper landing gear extension. The AD as adopted, does not include components which have life limits considerably higher than the present high time Model 727 airplanes. Those components and their corresponding life limits will be included in the next revision to Type Certificate Data Sheet No. A3WE.

Two commentators stated that the lock system components are not serialized and are interchanged between aircraft during main gear overhaul. Since no records exist on the number of landings (and/or hours) of each individual component, the commenters requested that a statement be included in the final rule which stipulates that the threshold apply to the airplane on which the component is installed, unless the operator has records to determine the actual number of landings on a component. The FAA concurs and the rule, as adopted, includes such a statement.

Several operators requested higher inspection intervals which are compatible with their normal maintenance intervals. After further consideration, the FAA has increased the intervals for some components. These intervals were selected from available service data. The FAA believes that circumstances may exist to justify further increases in the inspection intervals; a provision to permit such increases, when substantiated, is included in the final rule. Several operators objected to the requirement contained in paragraph B of the proposal for replacement of the main gear manual extension gearbox. The proposal, as written, would require accomplishment of Boeing Service Bulletin No. 32-164 which involves replacement of the manual extension horizontal support with an improved configuration. The

new support requires larger attaching hardware; however, the holes of the housing lugs which attach to the support cannot be enlarged due to insufficient edge margins, thereby requiring a new housing. Some operators have installed bushings (and the original fasteners) in the new supports to permit the use of the same housing. The FAA believes that this procedure is acceptable. Therefore, paragraph B of the proposal has been amended accordingly.

Several comments were made regarding proposed paragraph C which would require repetitive force tests of the main gear uplock hook assembly due to sticking bungees and binding uplock hooks. Improper hook positioning can cause gear/door missequencing. One operator suggested that Boeing Service Bulletin No. 727-32-245, which modifies the uplock assembly with an improved bungee and link with improved bushings, be made terminating action. The FAA agrees and paragraph C, as adopted, has been revised accordingly. One operator stated that it is presently accomplishing only the bushing replacement covered by Boeing Service Bulletin No. 727-32-245, and feels this action should also be considered as terminating action. This operator states that it has not experienced difficulty with the existing bungee and attributes its success to proper installation and maintenance. The rule permits alternate means of compliance and, if an operator can show equivalent safety, relieving action can be granted. Three commentators recommended that the proposed 5,000 landing interval for the force tests be increased to 6,000 landings, 8,000 flight hours, and five (5) years, respectively. After further consideration, the FAA believes that the interval could be extended to 6,000 landings, which would permit an operator to conduct the tests at every other "C" maintenance check and the rule so provides.

Finally, comments were received regarding the use of alternate fasteners and parts. One operator has procured parts which it believes to be equivalent to the corresponding Boeing parts. The AD contains provisions for the use of both equivalent parts and inspection methods when adequate substantiation is submitted. The alternate fasteners mentioned by the commentators have not been included in the related approved service bulletins and thus must be presented for approval with substantiating data.

ADOPTION OF THE AMENDMENT

Accordingly, pursuant to the authority delegated to me by the Administrator, § 39.13 of Part 39 of the Federal Aviation Regulations (14 CFR 39.13) is amended, by adding the following new Airworthiness Directive: BOEING: Applies to all Boeing Model 727 series airplanes certificated in all categories. Compliance required as indicated below. To prevent main landing gear-up landings as a result of a structural failure in the lock system, accomplish the following:

A. Unless already accomplished, within the next 1,500 landings from the effective date of this AD, or prior to the accumulation of the threshold listed in the table below, whichever occurs later, replace the components listed in the table in accordance with Boeing Service Bulletin Nos. 727-32-211, Revision 3, or 727-32-237, Revision 1, or in a manner approved by the Chief, Engineering and Manufacturing Branch, FAA Northwest Region.

As an alternate to replacement, the applicable components may be inspected for cracks in accordance with inspection methods specified in Boeing Service Bulletin No. 727-32-211, Revision 3, or other methods approved by the Chief, Engineering and Manufacturing Branch, FAA Northwest Region, at the intervals specified in the table. Cracked parts must be replaced prior to further flight.

| Component | Part No. | Replacement or initial inspection threshold (landings) | Repeat inspection interval not to exceed (landings) |
|---|---|---|---|
| Down Lock Torque Shaft | 65-78698-1, -2, -5, -6, -7, -8 | 35,000 | 3,000. |
| Down Lock Rod Assy | 69-2-0527-2, 65-33654-1, 65-33654-2, 65-33654-3, 65-33654-4. | 12,000 | 1,500. |
| | 65-33654-5 | 35,000 | 3,000. |
| Down Lock Torque Tube Assy | 65-26921-17, 26921-18 | 37,000 | 3,000. |
| Uplock Universal Block | 65-24488-1 | 10,000 flt hrs or 4 years, whichever occurs first. | 1,500. |
| Uplock Universal Bolt | NAS 1106-44, 6947743-1 | 11,000 | To be replaced. |
| Uplock Upper Assy | 65-25851-1, 25851-2, 25851-5, 25851-6. | 35,000 | 3,000. |
| Uplock Lower Crank | 65-49325-1, -2, 65-49325-5, -6, 65-49325-7, -8. | 3,000 | 1,500. |
| Uplock Lower Crank Bolt | NAS 1105-28 | 7,000 | To be replaced. |
| | BACP18T5-( ) | 7,000 | |
| | MS20392-5C( ) (Oversize Option) | 12,000 | |
| | MS20392-6C( ) (Oversize Option) | 50,000 | |
| Down Lock Rod Bolt (Inboard) | NAS 1105-13DW | 20,000 | To be replaced. |
| | BACB30LJ5U13 | 20,000 | To be replaced. |
| | Optional Bolts: BACB30NE5-13 BACB30GE5-14 NAS 1105-14 | | |
| | BACB30NE5-15 | 20,000 | To be replaced. |
| | Optional Bolts: BACB30LJ5U15 BACB30LJ5-16 | | |
| | BACB30NE5-15 | 20,000 | To be replaced. |
| | Optional Bolts: BACB30GE5-16 BACB30LJ5U15 | | |
| Down Lock Rod Bolt (Outboard) | NAS 1105-13DW | 20,000 | To be replaced. |
| | BACB30LM5DU12 | 20,000 | To be replaced. |
| | Optional Bolts: BACB30NE5D12 BACB30GE5D12 NAS 1305-12D | | |

B. Unless already accomplished, within the next 3,000 landings from the effective date of this AD, replace (1) the left and right hand main gear manual extension gearbox horizontal supports, P/N 65-24575-1, with P/N 65-69156-1 and (2) the left and right hand main gear manual extension support yokes, P/N 65-26300-1/-2 or 65-26300-7/8, 65-81412-1-2, with P/N 65-26300-21/-22 or 65-26300-23/-24 in accordance with the applicable procedures of Boeing Service Bulletin Numbers 32-164, Revision 1, and 727-32-204, Revision 1, or in a manner approved by the Chief, Engineering and Manufacturing Branch, FAA Northwest Region. Replacement of the gearbox housing is not required if an approved bushing/fastener configuration is used with horizontal support, P/N 65-69156-1. As an alternate to replacement of the manual extension support yokes, within the next 3,000 landings from the effective date of this AD, and thereafter at intervals not to exceed 3,000 landings, penetrant or eddy current inspect the support yokes in accordance with the procedures specified in Paragraph III, Part I—Inspection, of Boeing Service Bulletin No. 727-32-204, Revision 1, or in a manner approved by the Chief, Engineering and Manufacturing Branch, FAA Northwest Region. After inspection, apply corrosion inhibitor to the yoke clevis. Cracked parts must be replaced prior to further flight.

C. 1. Within the next 1,500 landings from the effective date of this AD, unless accomplished within the last 4,500 landings, and thereafter at intervals not to exceed 6,000 landings, accomplish the rotational force tests on the main landing gear uplock hook assembly in accordance with Paragraph III of Boeing Service Bulletin No. 727-32-212, Revision 1, or in a manner approved by the Chief, Engineering and Manufacturing Branch, FAA Northwest Region. Rework and replace uplock hook assembly components as required to obtain the acceptable hook rotational forces specified in the service bulletin.

2. Accomplishment of the main landing gear uplock hook assembly modification per Boeing Service Bulletin No. 727-32-245, or in a manner approved by the Chief, Engineering and Manufacturing Branch, FAA Northwest Region, constitutes terminating action to the inspections of paragraph C.1 above.

D. Unless already accomplished, within the next 3,000 landings from the effective date of this AD, accomplish the inspection/cleanup and replacement, as necessary, of the main landing gear manual extension support yoke attach bolts (2 per side) in accordance with Figures 1 and 2, as applicable, of Boeing Service Bulletin No. 727-32-251, or in a manner approved by the Chief, Engineering and Manufacturing Branch, FAA Northwest Region.

E. Within the next 1,500 landings after the effective date of this AD, or prior to the accumulation of 6,000 landings whichever occurs later, and thereafter at intervals not to exceed 1,500 landings, magnetic particle or eddy current inspect the main landing gear uplock lower shaft assemblies, P/Ns 65-24489-3 and 65-43772-1/-2 in accordance with Boeing Service Bulletin No. 727-32-257, Revision 1, or in a manner approved by the Chief, Engineering and Manufacturing Branch, FAA Northwest Region.

Cracked parts must be replaced with serviceable parts prior to further flight. Terminating action consists of replacement of the uplock lower shaft assembly with an improved shaft in accordance with Figure 2 of Boeing Service Bulletin No. 727-32-257, Revision 1, or in a manner approved by the Chief, Engineering and Manufacturing Branch, FAA Northwest Region.

F. Airplanes may be ferried to a maintenance base for replacement of parts in accordance with FAR 21.197.

G. Upon request of the operator, an FAA maintenance inspector, subject to prior approval of the Chief, Engineering and Manufacturing Branch, FAA Northwest Region, may adjust the repetitive inspection intervals specified in this AD to permit compliance at an established inspection period of the operator if the request contains substantiating data to justify the increase for that operator.

H. For the purpose of this AD, when conclusive records are not available to show the total number of landings accumulated by a particular part (or assembly), the number of landings may be computed by dividing the airplane time-in-service since the part (or assembly) was installed in the airplane by the operator's fleet average time per flight for his Model 727 series airplanes.

For those operators who are unable to determine the total time-in-service or landings accumulated on a part (or assembly) since new, the total number of landings of the airplane on which it is installed may be used. This applies only to the establishment of the total landings for the initial compliance threshold.

The manufacturer's specifications and procedures identified and described in this directive are incorporated herein and made a part hereof pursuant to 5 U.S.C. 552(a)(1).

All persons affected by this directive who have not already received these documents from the manufacturer, may obtain copies upon request to Boeing Commercial Airplane Company, P.O. Box 3707, Seattle, Washington 98124. These documents may also be examined at FAA Northwest Region, 9010 East Marginal Way South, Seattle, Washington 98108.

(Secs. 313(a), 601, and 603, Federal Aviation Act of 1958, as amended (49 U.S.C. 1354(a), 1421, and 1423) and Section 6(c) of the Department of Transportation Act (49 U.S.C. 1655(c); and 14 CFR 11.89)

NOTE.— The FAA has determined that this document involves a regulation which is not considered to be significant under the procedures and criteria prescribed by Executive Order 12044 and as implemented by interim Department of Transportation guidelines (43 FR 9582; March 8, 1978).

Issued in Seattle, Washington, on February 5, 1979.

C. B. WALK, Jr.,
*Director, Northwest Region.*

NOTE.—The incorporation by reference provisions in the document were approved by the Director of the Federal Register on June 19, 1967.

[FR Doc. 79-4811 Filed 2-14-79; 8:45 am]

---

[4910-13-M]

[Docket No. 18711; Amdt. 39-3412]

## PART 39—AIRWORTHINESS DIRECTIVES

### Britten-Norman (Bembridge), Ltd., BN-2A Mk III Series Trislander Airplanes

AGENCY: Federal Aviation Administration (FAA), DOT.

ACTION: Final rule.

SUMMARY: This amendment adopts a new airworthiness directive which requires inspection and modification of the attachment of the landing gear shock absorber mounting flange to the main landing gear leg extension tube on Britten-Norman (Bembridge) Ltd., Model BN-2A Mk III series Trislander airplanes. The inspection and modification are necessary to ensure the functional and structural integrity of the landing gear system. The AD is prompted by reports of in-service failure of the shock absorber mounting flange attachment which could result in malfunction or failure of the main landing gear.

DATES: Effective February 27, 1979. Compliance schedule—As prescribed in the body of the AD.

ADDRESSES: The applicable service bulletin may be obtained from: Product Support Department, Britten-Norman (Bembridge) Ltd., Bembridge—Isle of Wight, England.

A copy of the service bulletin is contained in the rules docket for this amendment in Room 916, 800 Independence Avenue, S.W., Washington, D.C. 20591.

FOR FURTHER INFORMATION CONTACT:

D. C. Jacobsen, Chief, Aircraft Certification Staff, AEU-110, Europe, Africa and Middle East Region, Federal Aviation Administration, c/o American Embassy, Brussels, Belgium, Telephone 513.38.30., or Chris Christie, Federal Aviation Administration, Engineering and Manufacturing Division, AFS-100, 800 Independence Avenue, S.W., Washington, D.C. 20591 (202) 426-8374.

SUPPLEMENTARY INFORMATION: There have been reports of in-service failure of the shock absorber mounting flange attachment to the main landing gear extension leg tube on Britten-Norman BN-2A Mk III series Trislander airplanes. The FAA has determined that a design weakness exists which, if left uncorrected, could result in structural failure and possible landing gear collapse. Since this condition is likely to exist or develop on other airplanes of the same type design, the AD requires inspection and modification of the affected component to prevent failure of the main landing gear.

Since a situation exists that requires the immediate adoption of this regulation, it is found that notice and public procedure hereon are impracticable and good cause exists for making this amendment effective in less than 30 days.

BRITTEN-NORMAN (Bembridge) LTD. Applies to Model BN-2A Mk III Trislander series airplanes, certificated in all categories.

Compliance is required, as indicated, unless already accomplished.

To prevent structural failure of the main landing gear:

(a) Within the next 10 hours time in service after the effective date of this AD, inspect the shock absorber mounting flange, P/N NB-40-C-075, at attachment point to the lower extremity of the main landing gear leg extension tube, PIN NB-40-D-337, for sheared or loose rivets and general structural integrity in accordance with paragraph "ACTION" of Britten-Norman Service Bulletin BN-2/SB.118 (Service Bulletin), dated July 25, 1978, or an FAA-approved equivalent.

(b) If, during any inspection required by this AD, sheared or loose rivets or indications of movement of the mounting flange within the extension tube are found, before further flight, accomplish the appropriate rectification and modification in accordance with paragraph "Rectification/Modification" (Mod. NB/M/1007) of the Service Bulletin, or an FAA-approved equivalent.

(c) If, during the inspection required by paragraph (a) of this AD, no sheared or loose rivets or indications of movement of the mounting flange within the extension tube are found, the airplane may be returned to service and thereafter, prior to the accumulation of 200 hours time in service after the completion of the inspection required by paragraph (a) of this AD, accomplish the rectification and modification required by paragraph (b) of this AD.

(d) If, prior to the accomplishment of the rectification and modification required by this AD, the landing gear is abused, e.g., the aircraft experiences hard or rough landings, a blown tire, sharp turns pivoting about a braked wheel, or taxiing over rough or soft surfaces, before further flight, inspect the shock absorber mounting flange, P/N NB-40-C-075, at attachment point to the lower extremity of the main landing gear extension tube, P/N NB-40-D-337, for sheared or loose rivets and general structural integrity in accordance with paragraph "ACTION" of the Service Bulletin, or an FAA-approved equivalent.

(e) Within the next 10 hours time in service after the effective date of this AD, fabricate and install in the cockpit near the limitation placard a temporary placard, which must remain in place until the rectification and modification required by this AD are accomplished, which states:

CAUTION

1. Avoid sharp turns pivoting about a braked wheel.

2. Avoid taxiing over rough or soft surfaces.

3. Record any abuse of the landing gear, e.g., hard or rough landings, blown tire, sharp turns pivoting about a braked wheel, taxiing over rough or soft surfaces, in the aircraft maintenance log book or other appropriate maintenance record and have inspected in accordance with AD 79-03-05 prior to next flight.

4. These limitations must be observed until the modification required by AD 79-03-05 is incorporated.

(f) Before installation on aircraft, incorporate Britten-Norman Mod. NB/M/1007 or an FAA-approved equivalent on main landing gear extension tube assemblies held as spares which do not already incorporate that modification.

This amendment becomes effective February 27, 1979.

(Secs. 313(a), 601, 603, Federal Aviation Act of 1958, as amended (49 U.S.C. 1454(a), 1421, and 1423); Sec. 6(c), Department of Transportation Act (49 U.S.C. 1655(c); 14 CFR 11.89.)

Issued in Washington, D.C., on February 1, 1979.

C. A. McKay,
*Acting Director,*
*Flight Standards Service.*

[FR Doc. 79-4689 Filed 2-14-79; 8:45 am]

---

[4910-13-M]

[Docket No. 79-SO-11; Amdt. No. 39-3408]

## PART 39—AIRWORTHINESS DIRECTIVES

### Gulfstream American Corp., Model GA-7

AGENCY: Federal Aviation Administration (FAA), DOT.

ACTION: Final rule.

SUMMARY: This amendment adopts a new Airworthiness Directive (AD) which requires inspection and modification of the rudder bellcrank torque tube on Gulfstream American Model GA-7. The AD is needed to prevent loosening of the rudder bellcrank torque tube which could result in partial loss of rudder control.

DATES: Effective February 15, 1979. Compliance within 10 hours time in service after the effective date of this AD, unless already accomplished.

ADDRESSES: The applicable GAC Service Bulletin may be obtained from Gulfstream American Corporation, P.O. Box 2206, Savannah, Georgia 31402, telephone (912) 964-3000. A copy of the Service Bulletin is located in Room 275, Engineering and Manufacturing Branch, FAA, 3400 Whipple Street, East Point, Georgia.

FOR FURTHER INFORMATION CONTACT:

Curtis Jackson, Aerospace Engineer, Engineering and Manufacturing Branch, FAA, Southern Region, P.O. Box 20636, Atlanta, Georgia 30320, telephone (404) 763-7407.

SUPPLEMENTARY INFORMATION: Four occurrences of wearing of the rudder bellcrank torque tube on GAC Model GA-7 aircraft have been reported. Since this situation is likely to occur on other aircraft of the same type design, an Airworthiness Directive is being issued which requires inspection and modification of the rudder bellcrank torque tube and compliance with GAC Service Bulletin ME-16.

Since a situation exists that requires the immediate adoption of this regulation, it is found that notice and public procedure hereon are impracticable and good cause exists for making this amendment effective in less than 30 days.

ADOPTION OF THE AMENDMENT

Accordingly, pursuant to the authority delegated to me by the Administrator, § 39.13 of Part 39 of the Federal Aviation Regulations (14 CFR 39.13) is amended by adding the following new Airworthiness Directive (AD):

GULFSTREAM AMERICAN CORPORATION (GAC) (Formerly Grumman American Aviation Corporation): Applies to GAC Model GA-7 serial numbers GA7-0002 through GA7-0038, GA7-0040, and GA7-0042 through GA7-0087, airplanes certificated in all categories.

Compliance is required as indicated, unless already accomplished.

To prevent partial loss of rudder control, accomplish the following within 10 hours time in service after the effective date of this AD:

1. Inspect and modify the rudder assembly as appropriate in accordance with GAC Service Bulletin ME-16 dated January 31, 1979, or later revision approved by the Chief, Engineering and Manufacturing Branch, FAA, Southern Region.

(a) If the freeplay exceeds the maximum allowed in Service Bulletin ME-16 (.040 inches or 1 degree), modify the rudder assembly in accordance with this bulletin before further flight; however, if the freeplay does not exceed .080 inches or 2 degrees, the aircraft may be flown to a base for repairs in accordance with FAR 21.197.

(b) If the freeplay is .040 inches (1 degree) or less, modify the rudder system in accordance with Service Bulletin ME-16 within 100 hours time in service after the effective date of this AD.

2. An equivalent method of compliance may be used if approved by the Chief, Engineering and Manufacturing Branch, FAA, Southern Region.

This amendment is effective February 15, 1979.

(Secs. 313(a), 601, and 603, Federal Aviation Act of 1958, as amended (49 U.S.C. 1354(a), 1421, and 1423); Sec. 6(c), Department of Transportation Act (49 U.S.C. 1655(c)); 14 CFR 11.89.)

Issued in East Point, Georgia, on January 31, 1979.

PHILLIP M. SWATEK,
*Director, Southern Region.*

[FR Doc. 79-4685 Filed 2-14-79; 8:45 am]

---

[4910-13-M]

[Docket No. 79-NW-2-AD; Amdt. 39-3409]

## PART 39—AIRWORTHINESS DIRECTIVES

### Hiller Aviation Model UH-12D and UH-12E Helicopters as Modified by Soloy Conversions, Limited STC Nos. SH177WE and SH178WE Respectively

AGENCY: Federal Aviation Administration (FAA), DOT.

ACTION: Final Rule.

SUMMARY: This amendment adopts a new Airworthiness Directive (AD) which requires removal from service certain main rotor tachometer generators which have exhibited an unacceptably high failure rate and their replacement with units found to be more reliable. Failure of this main rotor tachometer generator activates the low rotor speed (LRS) warning system initiating unnecessary emergency procedures on the part of the crew. Some of these emergency procedures have involved the unnecessary deployment of external loads, posing a hazard to ground personnel, and the execution of unnecessary full autorotations, posing a hazard to both aircraft and ground personnel.

DATES: Effective date Febraury 21, 1979. Compliance Schedule: As indicated in text of the AD.

ADDRESSES: The applicable service bulletin may be obtained from Soloy Conversions, Limited, Post Office Box 60, Chehalis, Washington 98532. This doucment may also be examined at FAA Northwest Region, 9010 East Marginal Way South, Seattle, Washington 98108.

FOR FURTHER INFORMATION, CONTACT:

Mr. Daniel I. Cheney, Propulsion Section, ANW-214, Engineering and Manufacturing Branch, FAA Northwest Region, 9010 East Marginal Way South, Seattle, Washington 98108, (206) 767-2520.

SUPPLEMENTARY INFORMATION: There have been reports of numerous in-service failures of certain main rotor tachometer generators. Since the low rotor speed (LRS) warning system monitors the output signal of this generator, each of these failures result in the activation of the cockpit LRS warning light and horn. In several cases, the most recent involving an accident on December 22, 1978, flight crew emergency procedures following this generator failure and LRS system activation have resulted in the deployment of external loads as well as execution of full autorotations. The FAA feels that, in considering the hazard posed to flight and ground personnel associated with repeated execution of emergency procedures following these generator failures, replacement of these suspect generators with units shown to be more reliable is necessary.

Since a situation exists that requires immediate adoption of this regulation, it is found that notice of public procedures hereon are impracticable and good cause exists for making this amendment effective in less than thirty (30) days.

ADOPTION OF THE AMENDMENT

Accordingly, pursuant to the authority delegated to me by the Administrator, Section 39.13 of Part 39 of the Federal Aviation Regulations (14 CFR 39.13) is amended, by adding the following new Airworthiness Directive:

HILLER AVIATION: Applies to Model UH-12D and UH-12E helicopters which have been converted to turbine power in accordance with Soloy Conversions, Limited, STC Nos. SH177WE and SH178WE respectively, certificated in all categories. Compliance required as indicated unless already accomplished.

To reduce the hazard to aircraft and ground personnel as a result of repeated execution of emergency procedures involving unnecessary external load deployment and full autorotation following false low rotor speed warning system activation, accomplish the following:

A. Within the next 200-hours time in-service, or 1 month calendar time, whichever occurs first after the effective date of this AD, replace Globe Industries' P/N 22A571 or P/N 22A580 main rotor tachometer generator with Globe Industries' P/N 22A623 main rotor tachometer generator in accordance with Soloy Conversions, Limited Service Bulletin 03-560 dated March 31, 1978, or later FAA approved revisions. Silicone sealing procedures required for installation of this new style generator are described in this bulletin.

B. Equivalent methods of compliance with this AD must be approved by the Chief, Engineering and Manufacturing Branch, FAA Northwest Region.

The manufacturer's specifications and procedures identified and described in this directive are incorporated herein and made a part hereof pursuant to 5 U.S.C. 552(a)(1).

All persons affected by this directive who have not already received these documents from the manufacturer, may obtain copies upon request to Soloy Conversions, Limited, Post Office Box 60, Chehalis, Washington 98532. These documents may also be examined at FAA Northwest Region, 9010 E. Marginal Way South, Seattle, Washington 98108.

This amendment becomes effective February 21, 1979.

(Secs. 313(a), 601, 603, Federal Aviation Act of 1958, as amended, (49 U.S.C. 1354(a), 1421, 1423); and Section 6(c) of the Department of Transportation Act (49 U.S.C. 1655(c); and 14 CFR 11.89.)

NOTE.—The FAA has determined that this document involves a regulation which is not considered to be significant under the procedures and criteria prescribed by Executive Order 12044 and as implemented by interim Department of Transportation guidelines (43 FR 9582; March 8, 1978).

Issued in Seattle, Washington, on February 1, 1979.

C. B. WALK, Jr.,
*Director, Northwest Region.*

NOTE.—The incorporation by reference provisions in the documents were approved by the Director of the Federal Register on June 19, 1967.

[FR Doc. 79-4680 Filed 2-14-79; 8:45 am]

---

[4910-13-M]

[Docket No. 78-CE-7-AD; Amendment 39-3413]

## PART 39—AIRWORTHINESS DIRECTIVES

### Beech 50, 65 and 70 Series Airplanes

AGENCY: Federal Aviation Administration (FAA), DOT.

ACTION: Revision of final rule.

SUMMARY: This Amendment revises Airworthiness Directive (AD), AD 78-11-01, Amendment 39-3220, as revised by Amendment 39-3277, applicable to all Beech 50, 65 and 70 series airplanes, by deleting those airplanes modified in accordance with STC SA76SW. This revision is necessary because the continuous type fire detector system cannot be installed in these modified airplanes in accordance with Beech Service Kit 80-9010 as presently required by AD 78-11-01.

EFFECTIVE DATE: February 6, 1979.

FOR FURTHER INFORMATION CONTACT:

Donald L. Page, Aerospace Engineer, Engineering and Manufacturing Branch, FAA, Central Region, 601 East 12th Street, Kansas City, Missouri 64106; telephone (816) 374-3446.

SUPPLEMENTARY INFORMATION: The last revision of Amendment 39-3220, AD 78-11-01, namely Amendment 39-3277, added Beech Models C50, D50, D50A, D50B, D50C and D50E airplanes modified in accordance with STC SA76SW to the applicability statement. Subsequent to this action, the FAA determined that the instructions contained in Beech Service Kit 80-9010 are not applicable to those airplanes so modified. The holder of STC SA76SW and the FAA's Southwest Region will develop appropriate instructions for installation of these kits in the modified airplanes. When these instructions are available, the Southwest Region will issue an AD requiring the actions prescribed in AD 78-11-01 on the modified airplanes. Therefore, the agency is altering Amendments 39-3220 and 39-3277 by amending the AD to remove those airplanes modified in accordance with STC SA76SW.

Since this amendment is relieving in nature and imposes no additional burden on any person, notice and public procedure hereon are impracticable and good cause exists for making this amendment effective in less than 30 days after the date of publication in the FEDERAL REGISTER.

ADOPTION OF THE AMENDMENT

Accordingly, pursuant to the authority delegated to me by the Administrator, Amendment 39-3220 (43 FR 22932, 22933) as revised by Amendment 39-3277 (43 FR 35472, 35473), AD 78-11-01, of Section 39.13 of Part 39 of the Federal Aviation Regulations (14 CFR 39.13) is amended as follows:

1) Delete the existing applicability statement and in its place add the following new applicability statement:

"BEECH: Applies to E50, F50, G50, H50, J50, 65, A65, A65-8200, 65-80, 65-A80, 65-A80-8800, 65-B80, 65-88 and 70 model airplanes certified in all categories except those modified in accordance with STCs SA444SW or SA587SW."

2) Delete the existing Paragraph A) and in its place add the following new Paragraph A):

"A) Within the next 25 hours time-in-service after June 1, 1978, install in the existing Airplane Flight Manual, the temporary airplane Flight Manual Supplement included in this AD as Figure 1, or, Beech Aircraft Company Airplane Flight Manual Supplement P/N 50-590211-31 dated May 29, 1978 or subsequent revision."

3) Delete the existing first sentence in Paragraph B) and in its place add the following new first sentence to Paragraph B):

"B) Within the next 100 hours time-in-service after June 1, 1978, except that this compliance time may be extended to 200 hours time-in-service if the inspection of components forward of the firewall required by AD 77-25-01 is accomplished at intervals no greater than 50 hours time-in-service during this compliance time extension."

This amendment becomes effective February 6, 1979.

(Secs. 313(a), 601 and 603 of the Federal Aviation Act of 1958, as amended, (49 U.S.C. 1354(a), 1421 and 1423); Sec. 6(c) Department of Transportation Act (49 U.S.C. 1655(c)); Sec. 11.89 of the Federal Aviation Regulations (14 CFR Sec. 11.89).)

NOTE: The FAA has determined that this document involves a proposed regulation which is not considered to be significant under the procedures and criteria prescribed by Executive Order 12044 and as implemented by interim Department of Transportation guidelines (43 FR 9582; March 8, 1978).

Issued in Kansas City, Missouri on February 6, 1979.

C. R. MELUGIN, Jr.,
*Director, Central Region.*

[FR Doc. 79-4937 Filed 2-14-79; 8:45 am]

---

[4910-13-M]

[Docket No. 79-SO-12; Amdt. No. 39-3411]

## PART 39—AIRWORTHINESS DIRECTIVES

### Embraer; Model EMB-110P1

AGENCY: Federal Aviation Administration (FAA), DOT.

ACTION: Final Rule.

SUMMARY: A telegraphic airworthiness directive (AD) was adopted on January 19, 1979, and made effective immediately upon receipt of the telegram to all known operators of EMBRAER Model EMB-110P1 airplanes. The directive requires inspection and replacement of the shock struts P/N 14570 and 14575; inspection of shock struts P/N 14570A, B, and C; and inspection of half-drag struts P/N 14284, 14284A, 14334 and 14334A. The AD is needed to inspect for cracks in the welded area of the main landing gear torque link-to-shock strut attachment fittings and at the half-drag strut near the hydraulic actuator joint.

DATES: This amendment is effective February 16, 1979, and was effective upon receipt for all recipients of the telegram dated January 19, 1979.

ADDRESSES: The EMBRAER Service Bulletin, 110-32-018, may be obtained from Empresa Brasileira de Aeronautica (EMBRAER), S/A, P.O. Box 343-CEP 12.200, Sao Jose dos Campos, SP, Brazil. A copy of the service bulletin is also located in Room 275, Engineering and Manufacturing Branch, FAA, Southern Region, 3400 Whipple Street, East Point, Georgia.

FOR FURTHER INFORMATION CONTACT:

R. B. Davis, Chief, Airframe Section Engineering and Manufacturing Branch, FAA, Southern Region, P.O. Box 20636, Atlanta, Georgia 30320, telephone (404) 763-7407.

SUPPLEMENTARY INFORMATION: There have been reports of cracks in the welded area of the main landing gear torque link-to-shock strut attachment fitting and at the half-drag strut near the hydraulic actuator joint which could cause failure of the landing gear. Since this condition is likely to exist or develop on other airplanes of the same type design, a telegraphic AD was issued on January 19, 1979, which required inspection and replacement of the shock struts P/N 14570 and 14575; inspection of shock struts P/N 14570A, B, and C; and inspection of half-drag struts P/N 14284, 14284A, 14334, and 14334A.

Since a situation existed that required immediate corrective action, it was found that notice and public procedure thereon were impractical and contrary to the public interest, and good cause existed for making the AD effective immediately to all known operators of EMBRAER Model EMB-110P1 airplanes. This condition still exists and the telegraphic AD, with further additional clarification, is hereby published in the FEDERAL REGISTER.

ADOPTION OF THE AMENDMENT

Accordingly, pursuant to the Authority delegated to me by the Administrator, § 39.13 of Part 39 of the Federal Aviation Regulations (14 CFR 39.13) is amended by adding the following new airworthiness directive:

EMBRAER: Applies to all Model EMB-110P1 airplanes, certificated in all categories. Compliance required as indicated. To prevent failure of the landing gear due to cracks in the welded area of the main landing gear torque link-to-shock strut attachment fittings and at the half-drag strut near the hydraulic actuator joint, accomplish the following:

1. *Aircraft with less than 2,000 landings.* For upper half-drag struts P/N 14284, 14284A, 14334, and 14334A.

A. Prior to the first flight of each day: Using a 10-power magnifying glass, conduct a visual inspection of the external side of the upper region of the half-drag strut, near the hydraulic actuator joint. If cracks are found, replace the failed component.

B. Within the next 200 landings and each 200 landings thereafter, using a dye-penetrant method, inspect the area outlined in 1.A. If cracks are found, replace the failed component.

2. *Aircraft with 2,000 landings or more.* For oil strut assemblies P/N 15164A, B, and C; and 15165A, B, and C on shock struts P/N 14570 and 14575; oil strut assembles P/N 15164D, 001 and 002 and 15165D, 001 and 002 on shock struts P/N 14570A, B, and C and 14575A, B, and C; and upper half-drag struts P/N 14284, 14284A, 14334 and 14334A.

A. Prior to the first flight of each day: Using a 10-power magnifying glass, conduct a visual inspection of the external side of the upper region of the half-drag strut, near the hydraulic actuator joint and at the shock struts of the main landing gear at the weld that joins the torque link-to-shock strut attachment. If cracks are found, replace the failed component.

B. Within the next 200 landings and each 200 landings thereafter, using a dye-penetrant method, inspect the areas outlined in 2.A. If cracks are found, replace the failed component.

3. *For aircraft with 3,000 landings or more, prior to further flight.* Replace shock struts P/N 14570 and 14575.

NOTE: EMBRAER Service Bulletin No. 110-32-018 pertains to this same subject.

Airplanes on which cracks have been found may be flown to a base for replacement of the failed components in accordance with FAR 21.197 and 21.199.

On airplanes on which landings are not recorded, one landing per flying hour may be used to determine number of landings.

This amendment becomes effective February 16, 1979.

(Secs. 313(a), 601, and 603, Federal Aviation Act of 1958, as amended (49 U.S.C. 1354(a), 1421, and 1423); Sec. 6(c), Department of Transportation Act (49 U.S.C. 1655(c)); 14 CFR 11.89).

Issued in East Point, Georgia, on February 5, 1979.

PHILLIP M. SWATEK,
*Director, Southern Region.*

[FR Doc. 79-4938 Filed 2-14-79; 8:45 am]

---

[4910-13-M]

[Airspace Docket No. 78-EA-70]

## PART 71—DESIGNATION OF FEDERAL AIRWAYS, AREA LOW ROUTES, CONTROLLED AIRSPACE, AND REPORTING POINTS

### Extension of Federal Airway

AGENCY: Federal Aviation Administration (FAA), DOT.

ACTION: Final rule.

SUMMARY: This amendment alters V-214 to extend from Martinsburg, W. Va., to Baltimore, Md., via the intersection of the Martinsburg 101° and the Baltimore 308° magnetic radials. This route is presently used as a vector route. Designation of this route as an airway will reduce flight planning and communication time required for its use.

EFFECTIVE DATE: April 19, 1979.

FOR FURTHER INFORMATION CONTACT:

Mr. Everett L. McKisson, Airspace Regulations Branch (AAT-230), Airspace and Air Traffic Rules Division, Air Traffic Service, Federal Aviation Administration, 800 Independence Avenue, SW., Washington, D.C. 20591; telephone: (202) 426-3715.

SUPPLEMENTARY INFORMATION:

HISTORY

On November 30, 1978, the FAA published for comment a proposal to extend V-214 eastward from Martinsburg to Baltimore (43 FR 56051). Interested persons were invited to participate in the rulemaking proceeding by submitting written comments on the proposal to the FAA. The comment received expressed no objection to the proposal. Section 71.123 of Part 71 was republished in the FEDERAL REGISTER on January 2, 1979 (44 FR 307).

THE RULE

This amendment to Part 71 of the Federal Aviation Regulations extends V-214 from Martinsburg to Baltimore via the INT of Martinsburg 094°T(101°M) and Baltimore 300°T(308°M) radials. This route is used extensively as a vector route for departures to the west and northwest. Designation of this route as an airway will reduce the flight planning and communication coordination time that is presently required to use the route.

ADOPTION OF THE AMENDMENT

§ 71.123 [Amended]

Accordingly, pursuant to the authority delegated to me by the Administrator, § 71.123 of Part 71 of the Federal Aviation Regulations (14 CFR Part 71) as republished (44 FR 307) is amended, effective 0901 GMT, April 19, 1979, as follows:

Under V-214 "Martinsburg, W. Va." is deleted and "Martinsburg, W. Va.; to Baltimore, Md." is substituted therefor.

(Secs. 307(a) and 313(a), Federal Aviation Act of 1958 (49 U.S.C. 1348(a) and 1354(a)); Sec. 6(c), Department of Transportation Act (49 U.S.C. 1655(c)); and 14 CFR 11.69.)

The FAA has determined that this document involves a regulation which is not significant under the procedures and criteria prescribed by Executive Order 12044 and implemented by interim Department of Transportation guidelines (43 FR 9582; March 8, 1978).

Issued in Washington, D.C., on February 7, 1979.

WILLIAM E. BROADWATER,
*Chief, Airspace and Air Traffic Rules Division.*

[FR Doc. 79-4939 Filed 2-14-79; 8:45 am]

---

[4910-13-M]

[Airspace Docket No. 78-RM-33]

## PART 71—DESIGNATION OF FEDERAL AIRWAYS, AREA LOW ROUTES, CONTROLLED AIRSPACE AND REPORTING POINTS

### Alteration of Transition Area

AGENCY: Federal Aviation Administration (FAA), DOT.

ACTION: Final Rule.

SUMMARY: This amendment alters the Williston, North Dakota 1,200' transition area to provide controlled airspace for aircraft executing the new RNAV runway 29 standard instrument approach procedure developed for Sloulin Field International Airport, Williston, North Dakota.

EFFECTIVE DATE: 0901 G.m.t., April 19, 1979.

FOR FURTHER INFORMATION CONTACT:

Joseph T. Taber/Pruett B. Helm, Operations, Procedures and Airspace Branch, Air Traffic Division, ARM-500, Federal Aviation Administration, Rocky Mountain Region, 10455 East 25th Avenue, Aurora, Colorado 80010; telephone (303) 837-3937.

SUPPLEMENTARY INFORMATION:

HISTORY

On January 4, 1979, the FAA published for comment, a proposal to alter the Williston, North Dakota 1,200' transition area (44 FR 1121). No objections were received as a result of this notice.

RULE

This amendment to Part 71 of the Federal Aviation Regulations (FAR's) alters the Williston, North Dakota 1,200' transition area. This action is necessary to provide controlled airspace for aircraft executing the new RNAV runway 29 standard instrument approach procedure developed for Sloulin Field International Airport, Williston, North Dakota.

DRAFTING INFORMATION

The principal authors of this document are Joseph T. Taber/Pruett B. Helm, Operations, Procedures and Airspace Branch, Air Traffic Division, and Daniel J. Peterson, Office of Regional Counsel.

ADOPTION OF THE AMENDMENT

Accordingly, pursuant to the authority delegated to me by the Administrator, Part 71 of the Federal Aviation Regulations (14 CFR Part 71) is amended effective April 19, 1979, as follows:

By amending subpart G, section 71.181 (44 FR 442) to alter the following transition area to read:

WILLISTON, NORTH DAKOTA

* * * and that airspace extending upward from 1,200' above the surface within a 13 mile radius of the Williston VOR, latitude 48°15'12" N., longitude 103°45'01" W., extending from the Williston VOR 203° radial clockwise to the Williston VOR 088° radial, and within 9.5 miles southwest and 4.5 miles northeast of the Williston VOR 316° radial, extending from the 13 mile radius area to 18.5 miles northwest of the VOR, and within 45 miles of the Williston VOR extending clockwise from V-430 to V-439.

(Sec. 307(a) Federal Aviation Act of 1958 (49 U.S.C. 1348(a)); Sec. 6(c), Department of Transportation Act (49 U.S.C. 1655(c); and 14 CFR 11.69.)

NOTE: The Federal Aviation Administration has determined that this document does not contain a major proposal requiring preparation of an Economic Impact Statement under Executive Order 11821, as amended by Executive Order 11949, and OMB Circular A-107.

Issued in Aurora, Colorado on January 31, 1979.

M. M. MARTIN,
*Director,*
*Rocky Mountain Region.*

[FR Doc. 79-4681 Filed 2-14-79; 8:45 am]

---

[4910-13-M]

[Docket No. 18700; Amdt. No. 1130]

SUBCHAPTER F—AIR TRAFFIC AND GENERAL OPERATING RULES

## PART 97—STANDARD INSTRUMENT APPROACH PROCEDURES

### Miscellaneous Amendments

AGENCY: Federal Aviation Administration (FAA), DOT.

ACTION: Final rule.

SUMMARY: This amendment establishes, amends, suspends or revokes Standard Instrument Approach Procedures (SIAPs) for operations at certain airports. These regulatory actions are needed because of the adoption of new or revised criteria, or because of changes occurring in the National Airspace System, such as the commissioning of new navigational facilities, addition of new obstacles, or changes in air traffic requirements. These changes are designed to provide safe and efficient use of the navigable airspace and to promote safe flight operations under instrument flight rules at the affected airports.

DATES: An effective date for each SIAP is specified in the amendatory provisions.

ADDRESSES: Availability of matters incorporated by reference in the amendment is as follows:

*For Examination—*

1. FAA Rules Docket, FAA Headquarters Building, 800 Independence Avenue, SW., Washington, D.C. 20591;
2. The FAA Regional Office of the region in which the affected airport is located; or
3. The Flight Inspection Field Office which originated the SIAP.

*For Purchase—*

Individual SIAP copies may be obtained from:

1. FAA Public Information Center (APA-430), FAA Headquarters Building, 800 Independence Avenue, SW., Washington, D.C. 20591; or
2. The FAA Regional Office of the region in which the affected airport is located.

*By Subscription—*

Copies of all SIAPs, mailed once every 2 weeks, may be ordered from Superintendent of Documents, U.S. Government Printing Office, Washington, D.C. 20402. The annual subscription price is $135.00.

FOR FURTHER INFORMATION CONTACT:

William L. Bersch, Flight Procedures and Airspace Branch (AFS-730), Aircraft Programs Division, Flight Standards Service, Federal Aviation Administration, 800 Independence Avenue, SW., Washington, D.C. 20591; telephone (202) 426-8277.

SUPPLEMENTARY INFORMATION: This amendment to Part 97 of the Federal Aviation Regulations (14 CFR Part 97) prescribes new, amended, suspended, or revoked Standard Instrument Approach Procedures (SIAPs). The complete regulatory description of each SIAP is contained in official FAA form documents which are incorporated by reference in this amendment under 5 U.S.C. 552(a), 1 CFR Part 51, and § 97.20 of the Federal Aviation Regulations (FARs). The applicable FAA Forms are identified as FAA Forms 8260-3, 8260-4 and 8260-5. Materials incorporated by reference are available for examination or purchase as stated above.

The large number of SIAPs, their complex nature, and the need for a special format make their verbatim publication in the FEDERAL REGISTER expensive and impractical. Further, airmen do not use the regulatory text of the SIAPs but refer to their graphic depiction of charts printed by publishers of aeronautical materials. Thus,

the advantages of incorporation by reference are realized and publication of the complete description of each SIAP contained in FAA form document is unnecessary. The provisions of this amendment state the affected CFR (and FAR) sections, with the types and effective dates of the SIAPs. This amendment also identifies the airport, its location, the procedure identification and the amendment number.

This amendment to Part 97 is effective on the date of publication and contains separate SIAPs which have compliance dates stated as effective dates based on related changes in the National Airspace System or the application of new or revised criteria. Some SIAP amendments may have been previously issued by the FAA in a National Flight Data Center (FDC) Notice to Airmen (NOTAM) as an emergency action of immediate flight safety relating directly to published aeronautical charts. The circumstances which created the need for some SIAP amendments may require making them effective in less than 30 days. For the remaining SIAPs, an effective date at least 30 days after publication is provided.

Further, the SIAPs contained in this amendment are based on the criteria contained in the U.S. Standard for Terminal Instrument Approach Procedures (TERPs). In developing these SIAPs, the TERPS criteria were applied to the conditions existing or anticipated at the affected airports. Because of the close and immediate relationship between these SIAPs and safety in air commerce, I find that notice and public procedure before adopting these SIAPs is unnecessary, impracticable, or contrary to the public interest and, where applicable, that good cause exists for making some SIAPs effective in less than 30 days.

ADOPTION OF THE AMENDMENT

Accordingly, pursuant to the authority delegated to me, Part 97 of the Federal Aviation Regulations (14 CFR Part 97) is amended by establishing, amending, suspending, or revoking Standard Instrument Approach Procedures, effective at 0901 G.m.t. on the date specified, as follows:

1. By amending § 97.23 VOR-VOR/DME SIAPs identified as follows:

* * * *Effective April 19, 1979*

Sullivan, IN—Sullivan County, VOR/DME-A, Amdt. 4
Detroit Lakes, MN—Detroit Lakes, VOR Rwy 13, Amdt. 4
Detroit Lakes, MN—Detroit Lakes, VOR Rwy 31, Amdt. 2
Ashland, OH—Ashland County, VOR-A, Amdt. 1
Blackwell, OK—Blackwell-Tonkawa Muni, VOR-A, Original

* * * *Effective March 22, 1979*

Tuskegee, AL—Moton Field, VOR-A, Amdt. 2
Hawthorne, CA—Hawthorne Muni, VOR Rwy 7, Amdt. 12
Hawthonr, CA—Hawthorne Muni, VOR Rwy 25, Amdt. 12.
Hawthorne, CA—Hawthrone muni, VOR-A, Amdt. 3
Lamar, CO—Lamar Munie, VOR Rwy 18, Amdt. 8
Pueblo, CO—Pueblo Memorial, VOR Rwy 25R (TAC), Amdt. 21
Waycross, GA—Waycross-Ware County, VOR-A, Amdt. 4
Bedford, IN—Virgil I. Grissom Municipal, VOR/DME Rwy 13, Amdt. 3
Bedford, IN—Virgil I. Grissom Municipal, VOR/DME Rwy 31, Amdt. 2
Manhattan, KS—Manhgattan Muni, VOR Rwy 3, Amdt. 10
Manhattan, KS—Manhgattan Muni, VOR-F, Original
Manhattan, KS—Manhattan Muni, VOR-H, Amdt. 9
Hagerstown, MD—Hagerstown Regional, VOR Rwy 9, Amdt. 5
Pontiac, MI—Oakland-Pontiac, VOR Rwy 9R, Amdt. 20
Pontiac, MI—Oakland-Pontiac, VOR Rwy 27L, Amdt. 11
Great Falls, MT—Great Falls Int'l, VOR Rwy 21, Amdt. 7
Albion, NY—Pine Hill, VOR Rwy 28, Original
Rocky Mount, MC—Rocky Mount-Wilson, VOR/DMME Rwy 22, Amdt. 7, cancelled
Lima, OH—Allen County, VOR Rwy 27, Amdt. 10
Napoleon, OH—Henry County, VOR Rwy 28, Amdt. 1
Sinton, TX—Sinton, VOR Rwy 32, Amdt. 4
Vernal, UT—Vernal, VOR Rwy 34, Amdt. 5
Wenatchee, WA—Pangborn Field, VOR-A, Amdt. 4

* * * *Effective February 22, 1979*

Concord, CA—Buchanan Field, VOR Rwy 19R, Amdt. 8

* * * *Effective January 25, 1979*

Moses Lake, WA—Grant County, VOR Rwy 3, Amdt. 3
Moses Lake, WA—Grant County, VOR Rwy 14L, Amdt. 9
Moses Lake, WA—Grant County, VOR Rwy 32R, Amdt. 16

NOTE.—THE FAA PUBLISHED AN AMENDMENT IN DOCKET NO. 18693, AMDT. NO. 1129 TO PART 97 OF THE FEDERAL AVIATION REGULATIONS VOL 44 FR NO. 18 PAGE 5070; DATED JAN 25, 1979 under Section 97.23 effective March 8, 1979, which is hereby amended as follows. Oklahoma city, OK—Wiley Post, VOR Rwy 35R, Amdt. 5, cancelled. Change effective date to March 22, 1979

2. By amending § 97.25 SDF-LOC-LDA SIAPs identified as follows:

* * * *Effective April 19, 1979*

Akron, OH—Akron Fulton Municipal, LOC Rwy 25, Amdt. 9
Cleveland, OH—Cleveland-Hopkins Internation, LOC Rwy 28R, Original, Cancelled

* * * *Effective March 22, 1979*

Hawthorne, CA—Hawthorne Muni, LOC Rwy 25, Amdt. 2
San Diego, CA—San Diego Int'l-Lindbergh Fld, LOC BC-A, Amdt. 18
San Diego, CA—San Diego Int'l-Lindbergh Fld, LOC/DME BC Rwy 27, Amdt. 5
Pueblo, CO—Pueblo Memorial, LOC BC Rwy 25R, Amdt. 13
Pontiac, MI—Oakland-Pontiac, LOC BC Rwy 27L, Amdt. 4
Youngstown, OH—Youngstown Municipal, LOC Rwy 14, Amdt. 1, cancelled

* * * *Effective February 22, 1979*

Jefferson City, MO—Jefferson City Memorial, LOC Rwy 30, Original
Concord, CA—Buchanan Field, LDA Rwy 19R, Original

3. By amending § 97.27 NDB/ADF SIAPs identified as follows:

* * * *Effective April 19, 1979*

Sullivan, IN—Sullivan County, NDB Rwy 36, Amdt. 3
Akron, OH—Akron Fulton Municipal, NDB Rwy 25, Amdt. 9
Ashland, OH—Ashland County, NDB Rwy 18, Amdt. 3
Cleveland, OH—Cleveland-Hopkins International, NDB Rwy 5R/L, Amdt. 14
Cleveland, OH—Cleveland-Hopkins International, NDB Rwy 23L/R, Amdt. 4
Gainesville, TX—Gainesville Muni, NDB Rwy 17, Amdt. 3

* * * *Effective March 22, 1979*

San Diego, CA—San Diego Int'l-Lindbergh Fld, NDB Rwy 9, Amdt. 17
San Diego, CA—San Diego Int'l-Lindbergh Fld, NDB-B, Amdt. 3
Pueblo, CO—Pueblo Memorial, NDB Rwy 7L, Amdt. 13
Pueblo, CO—Pueblo Memorial, NDB Rwy 25R, Amdt. 10
Waycross, GA—Waycross-Ware County, NDB Rwy 18, Original
Bedford, IN—Virgil I. Grissom Municipal, NDB Rwy 13, Amdt. 2
Bedford, IN—Virgil I. Grissom Municipal, NDB Rwy 31, Amdt. 2
Manhattan, KS—Manhattan Muni, NDB-A, Amdt. 13
Palmer, MA—Metropolitan, NDB Rwy 4, Original, cancelled
Gallipolis, OH—Gallia-Meigs Regional, NDB Rwy 23, Amdt. 2
Lima, OH—Allen County, NDB-A, Amdt. 1
Pickens, SC—Pickens County, NDB Rwy 4, Amdt. 3
Eagle Lake, TX—Eagle Lake, NDB Rwy 17, Original
Hayward, WI—Hayward Municipal, NDB Rwy 20, Amdt. 6
Rice Lake, WI—Rice Lake Municipal, NDB Rwy 36, Amdt. 2

* * * *Effective February 22, 1979*

Jefferson City, MO—Jefferson City Memorial, NDB Rwy 30, Amdt. 4

* * * *Effective January 29, 1979*

Grand Rapids, MI—Kent County International, NDB Rwy 26L, Amdt. 12

* * * *Effective January 25, 1979*

Moses Lake, WA—Grant County, NDB Rwy 32R, Amdt. 12

4. By amending § 97.29 ILS-MLS SIAPs identified as follows:

* * * *Effective April 19, 1979*

Cleveland, OH—Cleveland-Hopkins International, ILS Rwy 5R, Amdt. 6
Cleveland, OH—Cleveland-Hopkins International ILS Rwy 23L, Amdt. 6
Cleveland, OH—Cleveland-Hopkins International, ILS Rwy 28R, Amdt. 15

* * * *Effective March 22, 1979*

San Diego, CA—San Diego Int'l-Lindbergh Fld, ILS Rwy 9, Amdt. 9
Pueblo, CO—Pueblo Memorial, ILS Rwy 7L, Amdt. 16
Pueblo, CO—Pueblo Memorial, ILS Rwy 25R, Amdt. 6
Youngstown, OH—Youngstown Municipal, ILS Rwy 14, Original
Hagerstown, MD—Hagerstown Regional, ILS Rwy 27, Amdt. 2
Detroit, MI—Detroit Metropolitan-Wayne County, ILS Rwy 3R, Amdt. 3
Pontiac, MI—Oakland-Pontiac, ILS Rwy 9R, Amdt. 8

* * * *Effective February 22, 1979*

Windsor Locks, CT—Bradley International, ILS Rwy 6, Amdt. 26
Atlanta, GA—The William B. Hartsfield Atlanta Intl, ILS Rwy 26, Amdt. 13

* * * *Effective January 29, 1979*

Grand Rapids, MI—Kent County International, ILS Rwy 26L, Amdt. 13

* * * *Effective January 25, 1979*

Moses Lake, WA—Grant County, ILS Rwy 32R, Amdt. 14

NOTE.—THE FAA PUBLISHED AN AMENDMENT IN DOCKET NO. 18693, AMDT. NO. 1129 TO PART 97 OF THE FEDERAL AVIATION REGULATIONS (VOL 44 FR NO. 18 PAGE 5070; DATED JAN. 25, 1979) UNDER SECTION 97.29 EFFECTIVE MARCH 8, 1979, WHICH IS HEREBY AMENDED AS FOLLOWS: GRAND RAPIDS, MI—KENT COUNTY, ILS RWY 8R ORIG, CANCELLED SHOULD HAVE READ ILS RWY 8R AMDT 1, CANCELLED. EFFECTIVE 8 MAR 1979.

5. By amending § 97.31 RADAR SIAPs identified as follows:

* * * *Effective April 19, 1979*

Cleveland, OH—Cleveland-Hopkins International, RADAR 1, Amdt. 25

* * * *Effective March 22, 1979*

Pueblo, CO—Pueblo Memorial, RADAR-1, Amdt. 3
Kalamazoo, MI—Kalamazoo Municipal, RADAR 1, Amdt. 2

6. By amending § 97.33 RNAV SIAPs identified as follows:

* * * *Effective April 19, 1979*

Cleveland, OH—Cleveland-Hopkins International, RNAV Rwy 10L, Amdt. 6
Cleveland, OH—Cleveland-Hopkins International, RNAV Rwy 18R, Amdt.
Cleveland, OH—Cleveland-Hopkins International, RNAV Rwy 36L, Amdt. 6
Blackkwell, OK—Blackwell-Tonkawa Muni, RNAV Rwy 17, Original
Blackkwell, OK—Blackwell-Tonkawa Muni, RNAV Rwy 35, Original

* * * *Effective April 5, 1979*

Houston, TX—Hull Field, RNAV Rwy 35, Amdt. 3

* * * *Effective January 25, 1979*

Pascagoula, MS—Jackson County, RNAV Rwy 22, Amdt. 2

[Secs. 307, 313(a), 601, and 1110, Federal Aviation Act of 1958 (49 U.S.C. 1348, 1354(a), 1421, and 1510); sec. 6(c), Department of Transportation Act (49 U.S.C. 1655(c)); and 14 CFR 11.49(b)(3).]

NOTE.—The FAA has determined that this document involves a regulation which is not significant under the procedures and criteria prescribed by Executive Order 12044 and implemented by interim Department of Transportation guidelines (43 FR 9582; March 8, 1978).

Issued in Washington, D.C. on February 2, 1979.

JAMES M. VINES,
*Chief,*
*Aircraft Programs Division.*

NOTE.—The incorporation by reference in the preceding document was approved by the Director of the Federal Register on May 12, 1969.

[FR Doc. 79-4678 Filed 2-14-79; 8:45 am]

---

[4910-13-M]

[Docket No. 16245; Reference Revision of Part 107]

## PART 107—AIRPORT SECURITY

### Law Enforcement Compliance Record Requirements: Effective Date

AGENCY: Federal Aviation Administration (FAA), DOT.

ACTION: Notice of OMB approval.

SUMMARY: This notice prescribes the effective date for certain recording requirements regarding compliance with law enforcement actions under the revised Part 107. At the time those requirements were adopted the required coordination with the Office of Management and Budget had begun but approval had not yet been received. That process has now been completed and the requirements may be made mandatory.

EFFECTIVE DATE: March 29, 1979.

FOR FURTHER INFORMATION CONTACT:

Milford T. Conarroe, Ground Operations Security Division (ACS-300), Civil Aviation Security Service, Federal Aviation Administration, 800 Independence Avenue, SW., Washington, D.C. 20591; telephone (202) 426-8768.

SUPPLEMENTARY INFORMATION: On December 21, 1978, the FAA adopted an amendment revising Part 107 of the Federal Aviation Regulations (43 FR 60786; Dec. 28, 1978). Under § 107.23, certain recording requirements were adopted for which approval by the Office of Management and Budget was required before any person could be required to comply. However, the FAA concluded that the adoption of the remaining portions of that amendment should not be delayed pending that approval. Thus, the amendment was issued and the effectivity of the reporting requirements under § 107.23 was deferred until 30 days after a notice of the approval was published. On January 18, 1979, OMB approved those requirements. A copy of the OMB approval, including the FAA reporting forms approved for use by airport operators, may be examined at the Federal Aviation Administration, Office of the Chief Counsel, Rules Docket, 800 Independence Ave., SW., Washington, D.C. 20591.

Accordingly, this notice prescribes the necessary effective date and provides notice referred to at the time the requirements were adopted. Because this notice is being published more than 30 days before March 29, 1979, the effective date of revised Part 107, § 107.23 will not be effective until that date.

NOTICE OF EFFECTIVE DATE

Accordingly, the provisions of § 107.23 of Part 107 of the Federal Aviation Regulations (14 CFR Part 107) will be effective March 29, 1979.

(Secs. 313, 315, 316, and 601, Federal Aviation Act of 1958, as amended (49 U.S.C. 1354, 1356, 1357, and 1421); sec. 6(c), Department of Transportation Act (49 U.S.C. 1655(c)).

Issued in Washington, D.C. on February 6, 1979.

JONATHAN HOWE,
*Acting Chief Counsel.*

[FR Doc. 79-4829 Filed 2-14-79; 8:45 am]

---

[4410-01-M]

## Title 28—Judicial Administration

## CHAPTER I—DEPARTMENT OF JUSTICE

[Order No. 812-79]

## PART 0—ORGANIZATION OF THE DEPARTMENT OF JUSTICE

### Subpart M—Land and Natural Resources Division; Delegating to the Assistant Attorney General of the Land and Natural Resources Division the Duties Imposed Upon the Attorney General by Section 115(b) of the "Uranium Mill Tailings Radiation Control Act of 1978"; Correction

AGENCY: Department of Justice.

ACTION: Final rule.

SUMMARY: In FR Doc. 79-1481 appearing at page 3273 in the FEDERAL REGISTER of January 16, 1979, paragraph "(h)" of § 0.65 is corrected to read paragraph "(i)."

FOR FURTHER INFORMATION CONTACT:

James W. Moorman, Assistant Attorney General, Land and Natural Resources Division, Washington, D.C. 20530 (202-633-2701).

Dated: February 8, 1979.

LEON ULMAN,
*Deputy Assistant Attorney General, Office of Legal Counsel.*

[FR Doc. 79-5012 Filed 2-14-79; 8:45 am]

---

[4810-25-M]

## Title 31—Money and Finance: Treasury

## SUBTITLE A—OFFICE OF THE SECRETARY OF THE TREASURY

## PART 5—CLAIMS COLLECTION

AGENCY: Department of the Treasury.

ACTION: Final Rule.

SUMMARY: This amends the Treasury Department's Claims Collection regulations at 31 CFR Part 5 by raising the dollar limit of claims which may be administratively terminated, without referral to legal counsel, from $50 to $100.

EFFECTIVE DATE: This amendment is effective February 15, 1979.

FOR FURTHER INFORMATION CONTACT:

Diane K. Smith, Attorney Adviser, Office of the General Counsel, Department of the Treasury, 1500 Pennsylvania Avenue, N.W., Washington, D.C. 20220, 202-566-2327.

SUPPLEMENTARY INFORMATION: Section 5.3 of Title 31 of the Code of Federal Regulations is being amended so that efforts by the Treasury Department to collect claims of $100 or less due the Department of the Treasury can be terminated without having to be referred to counsel. Previously, only claims for $50 or less could be terminated without such referral. It has been determined that it would be cost effective to permit bureaus or offices to compromise or terminate claims under $100 without referral to counsel, since claims which previously would have been in the under $50 category are now in the $50-$100 category.

Although the Department considers all regulations, or amendments to existing regulations, published in the FEDERAL REGISTER and codified in the Code of Federal Regulations to be significant regulations, it has been determined that this final rule is not a significant regulation within the meaning of Executive Order 12044, March 24, 1978, "Improving Government Regulations" and the Department's regulations implementing that Order, 43 FR 52120, November 8, 1978, because it is nonsubstantive, essentially procedural and it does not impose substantial additional requirements or costs on, or substantially alter the legal rights or obligations of, those affected by this rule. Additionally, as this amendment pertains to a rule of agency policy, organization, or procedure, notice and public procedure respecting it is not deemed necessary or appropriate pursuant to 5 U.S.C. 553(b)(A).

§ 5.3 [Amended]

Accordingly, § 5.3 of 31 CFR Part 5 is amended as follows:

Substitute "$100" for "$50" in the last sentence of the section.

W. J. MACDONALD,
*Acting Assistant Secretary (Administration).*

JANUARY 19, 1979.

[FR Doc 79-4952 Filed 2-14-79; 8:45 am]

---

[3710-08-M]

## Title 32—National Defense

## CHAPTER V—DEPARTMENT OF THE ARMY

[AR 601-210]

## PART 571—RECRUITING AND ENLISTMENTS

AGENCY: Department of the Army, DOD.

ACTION: Final rule.

SUMMARY: The Department of the Army has amended the rule on recruiting and enlistments to announce minor changes in the program. In addition the text has been rewritten to reduce the number of pages and to make the regulation easier to read and understand. The provisions of this regulation are designed primarily for use by the U.S. Army Recruiting Command (USAREC) and those oversea commands that exercise recruiting responsibilities.

EFFECTIVE DATE: October 1, 1978.

FOR FURTHER INFORMATION CONTACT:

Sergeant Major W. R. Baird at (202) 695-1463 or write: HQDA (DAPE-MPR-P), WASH DC 20310.

Dated: February 9, 1979.

C. M. MATTHEWS,
*Lieutenant Colonel, GS, Acting Chief, Policy Branch.*

In consideration of the above, 32 CFR is amended by revising Part 571 to read as follows:

## PART 571—RECRUITING AND ENLISTMENTS

Sec.
571.1 General.
571.2 Basic qualifications for enlistment.
571.3 Waivable enlistment criteria including civil offenses.
571.4 Periods of enlistment.
571.5 Enlistment options.

AUTHORITY: Sec. 3012, 70A Stat. 157; 10 U.S.C. 3012

§ 571.1 General.

(a) *Purpose.* This part gives the qualifications for men and women enlisting or reenlisting in the Regular Army (RA). The procedures simplify and standardize the processing of applicants through the recruiting service. The applicant's ability to meet all requirements or exceptions will determine eligibility. This includes obtaining prescribed waivers.

(b) *Definitions.* The following definitions apply to this part:

(1) *Enlistment.* The first voluntary enrollment in the Regular Army as an enlisted member.

(2) *Reenlistment.* The second or subsequent voluntary enrollment in the Regular Army as an enlisted member.

(3) *United States Army.* The Regular Army, Army of the United States (AUS), Army National Guard (ARNG) of the United States, and the United States Army Reserve (USAR).

(4) *Regular Army (RA).* The permanent Army, which is a major component of the United States Army, as used in this part distinguishes it from the other major components.

(5) *Prior Service (PS).* One or more days of completed active duty in a regular component or of extended active duty in a Reserve component of any of the Armed Forces, in the Army National Guard or Army Reserve programs of active duty for training pursuant to the Reserve Forces Act of 1955; in the Reserve Enlistment Program of 1963; or in similar programs of any of the Army Forces. Short periods of active duty for training in any other programs will not meet prior service requirements in this part.

(6) *Non-Prior Service (NPS).* No previous service in any of the Armed Forces of the United States, or previous service without completion of 1 or more days of active duty or active duty for training as given in paragraph 5 of this section.

(7) *Within 3 months of separation.* The 3 month's period when an individ-

ual must reenlist to be eligible for certain benefits. This period begins on the day following separation and ends with the date of the month, 3 months later, that corresponds to the separation date. When there is no corresponding date in the 3rd month, the terminating date will be the last day of that month. For example, an individual separated on 31 January has a terminating date of 30 April.

(8) *Major commanders.* The following have commanding generals, United States Army Forces Command (FORSCOM); United States Army Training and Doctrine Command (TRADOC); US Army Military District of Washington (MDW); US Army Materiel Development and Readiness Command (DARCOM); US Army Intelligence and Security Command (INSCOM); US Army Communications Command (ACCOM); US Army Criminal Investigation Command (CIDC); US Army Health Services Command (HSC); Military Traffic Management Command (MTMC); Commander in Chief, US Army Europe and Seventh Army (CINCUSAREUR): Eighth US Army; and US Army Japan (USAJ).

(9) *Dependent.* The term "dependent" means:

(i) A spouse. This does not include a common law spouse unless so judged by a civil court.

(ii) Any unmarried natural (legitimate or illegitimate) or adopted child of the applicant if the child is under 18 year of age, whether or not the applicant has custody of the child, and regardless of who has guardianship of the child. If the applicant's child has been adopted by another person (Final adoption decree issued and effective) then the child is not the applicant's dependent. The term "natural child" includes any illegitimate child claimed by the applicant to be his/her child or judged to be his/her child by court order.

(iii) Stepchild of the applicant who resides with the applicant if the stepchild is under 18 years of age.

(iv) Any other person who is dependent on the applicant for over one-half of his/her support.

(10) *Applicant without a spouse.* An applicant who is unmarried, is divorced, is legally separated, whose spouse is deceased; has deserted applicant, is incarcerated, is not residing permanently with applicant, or applicant has sole custody of the dependent(s).

(c) *Delayed Entry Program (DEP).* The Commanding General, United States Army Recruiting Command (USAREC) is authorized by 10 U.S.C. 5-11a to organize and administer DEP. Applicants enlisted in DEP are assigned to the United States Army Reserve (USAR) Control Group (Delayed Entry). Only qualified applicants who agree to subsequently enlist in the Regular Army may enlist in DEP.

§ 571.2 Basic qualifications for enlistment.

(a) *Age requirements.* (1) Non-prior service. Applicants must be 17 to 34 years old, inclusive.

(2) Prior service. Applicants must be 17 to 34 years old. If 35 or older but less than 55 years, they will qualify if they:

(i) Have a minimum of 3 years honorable active service in any one of the Armed Forces, with at least 1 or more days of Army service.

(ii) Be not less than 35 years old plus the number of completed years of prior honorable active military service.

(3) Exceptions. Applicants will be exempt from the above age requirements if they can qualify for retirement by age 60, are not 55 or older with 20 or more years of active service, and if they are:

(i) Honorably discharged active duty commissioned or warrant officers who enlist within 6 months after their separation date or who were awarded the Medal of Honor, Silver Star, or the Distinguished Service Cross.

(ii) Enlisted members who separate from the Regular Army with an honorable or general discharge and reenlist within 3 months after separation date.

(4) Parental consent. The written consent of parents or legal guardian is required for applicants under 18 years of age.

(b) *Citizenship requirements.* The applicant must be:

(1) A citizen of the United States, or

(2) An alien who has been lawfully admitted to the United States as a permanent resident, or

(3) A National of the United States (Citizen of Puerto Rico, Guam, American Samoa or the Virgin Islands).

(c) *Trainability requirements.* (1) Non-prior service. For enlistment in mental group category I-III applicants must have a high school diploma (HSD) or General Education Development (GED) Certificate. HSD or GED scores must be 90 or above in one or more aptitude areas in Armed Services Vocational Aptitude Battery (ASVAB) tests. Mental group IV requires two. Non-high-school graduates (NHSG) in mental group I-IIIA require two. Applicants must meet all other criteria for the option they wish to select. (See § 571.2(c)(3).)

(2) Prior service. Applicants must meet the mental requirements in paragraph (c)(3) of this section, or qualify for exemption from these requirements through:

(i) Award of the Medal of Honor.

(ii) Award of the Distinguished Service Cross, Navy Cross, or Silver Star Medal, with less than 20 years of active military service.

(iii) Partially disabling combat wounds with less than 20 years of active military service.

(3) Mental categories and eligibility for enlistment.

| Applicant | Age | Education level [1] | Mental category [2] | Enlistment eligibility [3] DEP | Enlistment eligibility [3] RA | Remarks |
|---|---|---|---|---|---|---|
| NPS—male | 17 | HSG | I-IVB | Yes | Yes | 10th grade minimum unless over 22 years old, then 11th grade minimum. |
| | | GED | I-IIIA | Yes | Yes | |
| | | GED | IIIB-IV | No | No | |
| | | NHSG | I-IIIA | Yes | Yes | |
| | | NHSG | IIIB-IV | No | No | Eligible for RA if graduates. If NHSG, meet criteria of this table. |
| | | HSSR | I-IVB | Yes | (See remarks). | |
| NPS—male | 18 or older. | HSG | I-IVB | Yes | Yes | 10th grade minimum unless over 22 years old, then 11th grade minimum. |
| | | GED | I-IIIB | Yes | Yes | |
| | | GED | IV | No | No | |
| | | NHSG | I-IIIA | Yes | Yes | |
| | | NHSG | IIIB | Yes | Yes | 11th grade minimum regardless of age. |
| | | NHSG | IV | No | No | Eligible for RA if graduates. If NHSG, meet criteria of this table. |
| | | HSSR | I-IVB | Yes | (See Remarks). | |
| NPS—female | | HSG | WST 50 or higher. | Yes | Yes | Eligible for RA if graduates. |
| | | GED | | No | No | |
| | | NHSG | | No | No | |
| | | HSSR | | Yes | Yes | |

| Applicant | Age | Education level [1] | Mental category [2] | Enlistment eligibility [3] DEP | RA | Remarks |
|---|---|---|---|---|---|---|
| Prior service—male | | HSG | I-IIIB and three aptitude scores of 90 or higher. | Yes | Yes | |
| | | GED | | Yes | Yes | |
| | | NHSG | | No | No | |
| Prior service—female | | HSG | Three aptitude scores of 90 or higher. | Yes | Yes | If female is a member of USAR/ARNG prior to RA enlistment, a minimum Womens Selection Test (WST) score of 50 is required in addition to 3 aptitude scores of 90 or higher. |
| | | GED | | Yes | Yes | |
| | | NHSG | | No | No | |

[1] Education definitions:

a. High school graduate (HSG). An applicant who has graduated from an accredited high school with a diploma, a certificate of graduation, or statement of completion.

b. General Education Development (GED) equivalency. An applicant who has evidence of completion of the high school level GED equivalency.

c. Non-high school graduate (NHSG) and high school senior (HSSR). Self explanatory.

[2] CAT I 93-100, CAT II 65-92, CAT IIIA 50-64, CAT IIIB 31-49, CAT IVA 21-30, CAT IVB 16-20.

[3] Applicants must meet the additional prerequisites for training in the selected military occupational specialty (MOS) as indicated by the option and REQUEST System.

(d) *Education requirement.* (1) Applicants must meet the following educational requirements of the specific enlistment option.

(i) Female applicants must be high school graduates.

(ii) Male applicants, 17-22 years of age, must have successfully completed the 10th grade or equivalent. Males, 23 or older at time of entry on active duty, must have successfully completed the 11th grade or equivalent.

(iii) Aliens or applicants completing high school requirements in foreign countries must take the GED or have obtained an evaluation in accordance with Table 2-5, note 5d, AR 601-210 to be considered a high school graduate for enlistment purposes.

(iv) Minimum education requirements, in a foreign country, given in paragraph (d)(1)(iii) of this section are the same in the United States.

(2) Prior service applicant must either:

(i) Possess a diploma or certificate of graduation from high school; or

(ii) Present documentation of successful completion of high school level or higher GED equivalency.

(e) *Physical requirements.* (1) The applicant must:

(i) Meet the enlistment physical fitness standards given in chapter 2, AR 40-501.

(ii) Meet any additional requirement of the specific enlistment option.

(iii) Request a waiver if the AFEES medical examining officer decides an exception to medical standards is appropriate.

(2) Prior service applicants must meet the weight standards in Appendix A, AR 600-9 and

(i) The retention medical fitness standards in chapter 3, AR 40-501, if applicant enlists within 6 months of RA separation.

(ii) The enlistment medical fitness standards in chapter 2, AR 40-501 (except the weight standards of paragraph 2-22, AR 40-501) if applicants enlist 6 months from the last RA separation date, or if applicants last separated from another service or component and meets the weight tables in Appendix A, AR 600-9.

(iii) The retention medical fitness standards in chapter 3, AR 40-501 if applicant is an active member of USAR/ARNG unit and, meets the weight tables at Appendix A, AR 600-9.

(iv) Any additional requirements for the specific enlistment option.

(f) *Dependent criteria.* (1) The applicant may have only three dependents (see paragraph (f)(1) and (iii) of this section).

(i) An applicant without a spouse who has one or more dependents under 18 years of age is disqualified, except as noted in paragraph (f)(1) (ii) and (iii) of this section. No waiver is authorized.

(ii) An applicant may be enlisted when dependent children are in the custody of the other parent by court order, and the applicant is not required to provide child support. No waiver is required.

(iii) An applicant, required to pay child support for no more than 2 dependents under 18 years of age when dependents are in the other parent's custody by court order, may enlist without waiver.

(iv) In meritorious cases, an applicant with a spouse may request waiver of paragraph (f)(1) of this section.

(v) Husband and wife teams who have one or more dependents under 18 years of age are disqualified. No waiver is authorized.

(vi) An applicant with a spouse on active duty with any Service who has 1 or more dependents under 18 years of age is disqualified.

(2) Prior service. Same as non-prior service for pay grades E-1 through E-3. If eligible for pay grade E-4 or higher, may enlist without regard to number and ages of dependents. However, the provisions of paragraph (f)(i), (ii), (iii), (v), and (vi) of the above rule for applicants without prior service apply.

§ 571.3 Waivable enlistment criteria including civil offenses.

(a) *Waivers of enlistment eligibility criteria*—(1) *General.* This section gives the procedures for initiating and processing requests for waiver to meet the basic qualifications for enlistment.

(2) *All waiver authority.* The Commander, U.S. Army Enlistment Eligibility Activity (USAEEA) may act for the Commanding General, U.S. Army Military Personnel Center (MILPERCEN) to process, approve and disapprove waivers for enlistment.

(3) *Waiver disapproval authority.* The responsibility for deciding if a waiver request warrants favorable consideration rests at all levels.

(4) *Validity period.* Unless otherwise stated in the waiver document, waivers are valid for 6 months.

(5) *Waiver approval authorities—eligibility criteria.*

| If disqualification is— | Then approval authority is— |
|---|---|
| (i) Medical: | |
| Non-prior service. | CG, USAREC |
| Prior service | CG, MILPERCEN |
| (ii) Underweight or overweight (+ or −5 lbs.): | |

| If disqualification is— | Then approval authority is— |
|---|---|
| Non-prior service. | AFEES Senior Medical Officer |
| Prior service..... | None. Prior service applicants enlisting in DEP or active Army must meet the AR 600-9 weight standards. No waivers are authorized. |
| (iii) Dependents..... | CG, MILPERCEN |
| (iv) AWOL: | |
| Lost time 1-15 days. | CDR, District Recruiting Command (DRC) |
| Lost time over 15 days. | CG, MILPERCEN |
| (v) Previous discharge for dependency or hardship. | CG, MILPERCEN |
| (vi) Last separated from any of the Armed Forces on the basis of being a sole surviving person and family member or applying for enlistment for the first time. | CG, USAREC |
| (vii) Previous conscientious objectors who are no longer conscientious objectors:. | |
| Non-prior service. | CG, USAREC |
| Prior service..... | CG, MILPERCEN |
| (viii) Received one or more convictions by military courts-martial during last period of active service or was discharged with disqualifications (e.g., unsuitability, conviction by civil court, resignation for good of Service, misconduct, fraudulent enlistment, or bar to reenlistment). | CG, MILPERCEN |
| (ix) Desires to enlist as conscientious objector: | |
| Non-prior service. | CG, USAREC |
| Prior service..... | CG, MILPERCEN |
| (x) Was denied reenlistment at time of last separation from active Service under Qualitative Screening Process unless ineligible for enlistment. | CG, MILPERCEN |
| (xi) Discharged under the Trainee Discharge program or Expeditious Discharge program. | CG, MILPERCEN |
| (xii) Primary Military Occupational Specialty (PMOS) Evaluation Score below 70. | CG, MILPERCEN |
| (xiii) Persons whose DD Form 214 (Report of Separation from Active Duty) contains no PMOS evaluation score. | CG, MILPERCEN (Year Group Management) |
| (xiv) Persons enrolled in the Alcohol and Drug Abuse Prevention and Control Program (ADAPCP) at time of last separation from active duty. | CG, MILPERCEN |

(b) *Civil offenses.*—(1) *Moral standards.* Moral standards for enlistment deal generally with the acceptability of persons with records of court convictions or adverse juvenile judgments. The standards screen out persons who may become serious disciplinary cases and who could bring harm to a military mission.

(2) *Waiver approval authorities—civil offenses.*

| If the offense is— | Then approval authority is— |
|---|---|
| (i) Minor traffic offenses..... | CDR, Recruiting Area |
| (ii) Minor non-traffic offenses | CDR, Recruiting Area |
| (iii) Misdemeanors..... | CDR, DRC |
| (iv) Juvenile felonies..... | CG, USAREC |
| (v) Adult felonies..... | CG, MILPERCEN |
| (vi) Civil restraint of unconditional suspended sentence or unconditional. | CDRs in lines (i) through (v) for the offenses involved |

(c) *Rules governing processing of moral waivers.* (1) Individuals require a misdemeanor waiver if arrested, cited, charged, or held and allowed to plead guilty to a lesser offense or to plead guilty to criminal possession of stolen property (value $100 or less). An arrest or questioning with no preferral of charges does not require a waiver. When charges are dismissed without determination of guilt no waiver is required. A waiver is not authorized if a criminal or juvenile court charge is pending or if such a charge was dismissed or dropped at any stage of the court proceedings on condition that the offender enlist in a military service.

(2) To ensure equal treatment of all persons applying for RA enlistment, notwithstanding the wide variance in State statutes, the following guidance is furnished:

(i) *Expunging of the record.* Some states have procedures for (subsequent) "expunging of the record," dismissal of charges, or pardon (upon evidence of rehabilitation of the offender). Such action has the effect of extinguishing the "initial conviction" or "adverse juvenile adjudication." Under the State law, the applicant then has no record of conviction or adverse juvenile decision. Despite the legal effect of this action, a waiver is required to authorize the RA enlistment of such an applicant. The record is also required to be revealed.

(ii) *Juvenile and youthful offenses.* To determine eligibility for RA enlistment, a juvenile or youthful offense is defined as one committed by the applicant under the age that the individual could enlist in the RA without parental consent. Offenses committed below the age of 18 are considered juvenile or youthful offenses regardless of disposition of civil authorities. For example, a juvenile felony is one committed by an applicant under 18, whether or not the result is a civil court conviction or adverse juvenile judgements. On the other hand, an adult felony is one committed by an applicant when 18 years old or older regardless of what type of court makes the decision.

(iii) *Civil court conviction.* This term means the decision of guilty by a court (or a jury) based either on the case's merits, or on the defendant's guilty plea or nolo contendere, regardless of—

(A) Whether sentence was then imposed, withheld, or suspended, or

(B) Subsequent proceedings deleted an initial decision of guilt from court records, based on evidence of rehabilitation or completion of a satisfactory probationary period. Examples of subsequent proceedings in adult offender cases include pardon; expungement; reopening of the case to change the original finding of guilty or nolo contendere, to not guilty, dismissing the charge, amnesty, and setting aside the conviction. These subsequent proceedings merely recognize rehabilitation, they do not alter the fact that the offender committed the criminal act.

(iv) *Adverse juvenile judgements.* This term—

(A) Means that a judge or a jury in a juvenile court proceedings determined that the juvenile was guilty of or committed the alleged acts, that the decision was based either on the complaint's merits or on the juvenile's admission of guilt or plea of guilty; and that the decision was recorded in the court records.

(B) Applies, whether or not sentence was then imposed, withheld, or suspended; and regardless of subsequent proceedings to delete an initial determination of guilt from court records, based on rehabilitation or satisfactory probation or supervision. Examples of subsequent proceedings in juvenile courts include expungement; record sealing; reopening the case to change the original findings of guilty or delinquency, or the plea of guilty or admission of the truth of the allegation, to not guilty; and dismissal of the original petition and setting aside the decision of delinquency. These subsequent proceedings merely recognize rehabilitation. They do not alter the fact that the juvenile committed the act for which he or she was judged.

(C) Includes judgement as a juvenile delinquent, wayward minor, youthful offender, delinquent child or juvenile offender, and declaration of the juvenile as a ward of the court. The term does not include the judgement of the juvenile as dependent, neglected, or abandoned.

(v) *Unconditional suspended sentence and supervised unconditional probation.* These terms mean a suspended sentence or probationary status imposed by a court that places no condition upon the individual—

(A) Concerning individual's freedom of movement.

(B) Requiring the payment of damages. (If paid, this requirement is no bar to waiver consideration.)

(C) Requiring periodic reporting to an officer of the court (including a probation officer).

(D) Involving supervision by an officer of the court (including a probation officer). For example, a sentence suspended on sole condition that the offender must not commit a like offense in the next 12 months does not bar waiver consideration.

(vi) *For prior service personnel.* Although the applicant must reveal all offenses committed, only those require a waiver that are committed during and/or subsequent to the last period of honorable service, and/or those not previously revealed. For Reserve Component personnel of any Service, waivers are required for all offenses shown that require a waiver, whether or not a waiver was authorized for entry into the Reserve Component. Waivers granted to enter the Reserve Components are not valid for Regular Army enlistment.

(d) *Waiting period.* The waiting period following release from civil restraint gives the individual an opportunity to demonstrate a satisfactory adjustment and the Army a basis to judge the applicant's rehabilitation before enlistment.

(e) *Required investigations.* If the applicant does or does not admit a record (to include arrests, charges, juvenile court judgments, and convictions), and the enlisting agency has reason to believe a record exists, enlistment action will be held in abeyance pending an investigation.

(f) *Civil restraint.* (1) If all civil restraint is ended and there is substantial evidence of rehabilitation as a law-abiding member of a civil community, the applicant may be processed for enlistment.

(2) Recruiting personnel will not help directly or indirectly in the release of an individual from a pending charge so that he or she may enlist in the Army as an alternative to further prosecution or further juvenile court proceedings. Equally important, recruiting personnel will in no way contribute, either tacitly or expressly, to the false notion that the Army condones such a practice. Persons subject to a pending charge are not eligible for enlistment. Therefore, they are not eligible for preenlistment processing to determine their mental and medical eligibility.

(g) *Restrictions on help.* Recruitment personnel will not help in any way to secure the release of individuals from any type of civil restraint so that these individuals may enlist or start reenlistment processing. The term "civil restraint" includes confinement, probation, parole, and suspended sentence. Persons under civil restraint that makes them ineligible for enlistment are not eligible for preenlistment processing to determine their mental and medical eligibility for enlistment.

§ 571.4 Periods of enlistment.

Enlistments are authorized for periods of 2, 3, 4, 5, or 6 years. The enlistee's option determines the number of years.

§ 571.5 Enlistment options.

Personnel who enlist in the Regular Army for 2 or more years are authorized certain initial assignment choices. They must meet the criteria given in AR 601-210. Also, a valid Army requirement must exist for the skill under which enlisted.

[FR Doc. 79-4955 Filed 2-14-79; 8:45 am]

---

[4110-35-M]

## Title 42—Public Health

## CHAPTER IV—HEALTH CARE FINANCING ADMINISTRATION, DEPARTMENT OF HEALTH, EDUCATION, AND WELFARE

## PART 431—STATE ORGANIZATION AND GENERAL ADMINISTRATION

## PART 442—STANDARDS OF PAYMENT FOR SKILLED NURSING AND INTERMEDIATE CARE FACILITY SERVICES

### Skilled Nursing and Intermediate Care Facilities: Appeals Proceedings for Denial, Termination or Nonrenewal of Certifications and Provider Agreements

AGENCY: Health Care Financing Administration (HCFA), HEW.

ACTION: Final Regulation.

SUMMARY: The rules require States to make appeals proceedings available to skilled nursing facilities and intermediate care facilities whose participation in the Medicaid program is being denied, terminated, or not renewed. The rules also require States to advise facilities participating in both Medicare and Medicaid that appeal of a denial, termination or nonrenewal of certification will be available through the Medicare review procedures at 42 CFR Part 405, Subpart O, and that any Medicare decision upon that review will be binding on Medicaid.

EFFECTIVE DATE: These rules become effective May 16, 1979.

FOR FURTHER INFORMATION, CONTACT:

James Conrad, Health Standards and Quality Bureau, HCFA, Room 322 East High Rise, 6401 Security Boulevard, Baltimore, Maryland 31325, Telephone: (301) 594-7955.

SUPPLEMENTARY INFORMATION:

BACKGROUND

The current Medicaid statute and regulations do not require that States provide an appeals procedure to providers whose participation in Medicaid is denied, terminated or not renewed. These rules establish such procedures with respect to skilled nursing facilities (SNF's) and intermediate care facilities (ICF's).

1. SCOPE OF THESE RULES

On January 19, 1977, we proposed new rules which had two primary goals: (1) To require that States make appeals proceedings available to SNF's and ICF's for reviewing State agency decisions to deny or terminate a facility's participation in Medicaid; and (2) to clarify the point at which Federal funding of Medicaid payments would cease for a facility that had been terminated from the Medicaid program. Included within the second issue were rules providing retroactive payments for terminated facilities which were determined, after administrative or judicial appeal, to have been qualified to participate, and certain provisions relating to the coterminous nature of Medicare and Medicaid provider agreements. (42 FR 3665)

It was our intention to raise in that Notice the question whether Federal financial participation in payments to facilities should be continued throughout the hearing process and, more specifically, what effect State laws and court injunctions against States which continued State payments to facilities or extended their provider agreements throughout the hearing process should have on Federal Medicaid payments. We now believe, however, that these issues were not adequately addressed in the Notice. We have, therefore, decided not to issue final rules on the Federal financial participation questions contained in the Notice at this time. We intend to address those issues specifically in a new Notice of Proposed Rulemaking.

2. RECODIFICATION

Since publication of the Notice of Proposed Rulemaking, we have reorganized and rewritten the Medicaid regulations. (43 FR Part V, September 29, 1978.) The NPRM has, therefore, been revised to conform to the new organization and style of the Medicaid regulations.

SUMMARY OF NPRM AND FINAL RULES

1. APPEALS PROCEDURES FOR FACILITIES PARTICIPATING ONLY IN MEDICAID

The proposed rules would have required that States establish a two-part hearing process. The rules provided for an informal reconsideration process to be made available to a provider before the effective date of a denial or

termination action by the state. The content of the reconsideration was not specified in the proposed rules. The proposal also required that a full evidentiary administrative hearing be available to a provider within four months of the effective date of a denial or termination action (either before or after, at the State's option.) The specific administrative hearing process would have been formulated by the State but must have, at a minimum, provided for an impartial hearing officer, the right to call and examine witnesses, and a full re-examination of the basis for the determination.

The final rules make it clear that appeal procedures must be available in the case of a nonrenewal, as well as a denial or termination, of a facility's certification or provider agreement. They retain the requirement that States provide facilities the opportunity for a full evidentiary hearing, but expand the minimum content of the full evidentiary hearing specified in the proposed rules. The hearing must include, at the least, timely written notice to the provider of the findings upon which the termination or denial is based and disclosure of the record on which the action is taken; the right of the provider to appear before an impartial reviewer to refute those findings; an opportunity for the provider to cross examine adverse witnesses; the conduct of the hearing by an impartial decision maker; and issuance of a written decision by the impartial decision maker setting forth the reasons for his decision and the evidence upon which he based that decision.

The final rules also clarify the relationship between the informal reconsideration and the full evidentiary hearing. The State must provide either an informal reconsideration proceeding or an evidentiary hearing, but not both, before the effective date of an action. The State must provide the informal reconsideration proceeding only if it elects to provide the full evidentiary hearing after the action.

The minimum elements of the reconsideration proceeding have also been spelled out in the final rules. The States may still develop and implement their own reconsideration proceedings. But Federal rules will now require that that process include, at a minimum, timely written notice of the reasons for the action, a reasonable opportunity for the facility to refute those reasons in writing, and a written decision prior to the effective date of the action.

The final rules also revise the proposed rules to provide that the appeals proceedings required prior to the denial or termination action must be completed prior to the effective date of the action. Any appeals proceeding required by the regulations after the action must be completed within 120 days after that action.

Both the informal reconsideration proceeding and the full evidentiary hearings proceedings may be formulated by the States in accordance with State law and practice, so long as they also meet these essential requirements.

2. PROVISIONS APPLICABLE TO FACILITIES PARTICIPATING IN BOTH MEDICARE AND MEDICAID

The current Medicaid regulations require that a Medicaid provider agreement be subject to the same terms and conditions as a Medicare agreement and that it be coterminous with the Medicare agreement. (42 CFR 442.20) When the Secretary notifies the Medicaid agency that a Medicare agreement with a SNF has been terminated, the State must terminate its Medicaid agreement with that facility. In addition, the State may not enter into another agreement with that facility until the conditions causing the termination are removed and the facility provides reasonable assurance to the survey agency that the conditions will not recur.

The proposed rules expanded § 442.20 to make it applicable also to cases of denials and nonrenewals. The proposed rules also added new requirements that facilities participating jointly in Medicare and Medicaid must pursue the Medicare appeals process if they wish to appeal a denial, termination, or nonrenewal of certification and that States advise them of this requirement. The decision rendered in the Medicare process would be binding on the facility's Medicaid participation.

The final rules retain these provisions of the proposed rules.

ANALYSIS OF PUBLIC COMMENTS

We received twenty seven comments on the January 19, 1977 Notice of Proposed Rulemaking. The comments were addressed primarily to the questions whether a full evidentiary hearing should be provided prior to the termination or denial action, whether the time periods in which the informal reconsideration proceeding and full evidentiary hearing must take place should be revised, and whether the particular elements of the reconsideration and evidentiary hearing proceedings should be revised.

The comments and our responses are as follows:

1. FULL EVIDENTIARY HEARING PRIOR TO ACTION

*Comment:* Some commenters urged that a full evidentiary hearing be provided prior to the termination action. Some commenters argued that a failure to provide such a hearing violated the facility's constitutional due process rights. One commenter noted that the failure to require full evidentiary pre-termination hearings was inconsistent with several court decisions: *Hathaway* v. *Mathews*, 546 F. 2d 227 (7th Cir. 1976); *Case* v. *Weinberger*, 523 F. 2d 602 (1975); and *Ross* v. *State of Wisconsin Department of Health & Social Services*, 369 F. Supp. 570 (E.D. Wisc. 1973) (per curiam).

*Response:* We do not agree that a full evidentiary hearing is constitutionally required prior to a facility's exclusion from the program. We believe that the combination of an informal reconsideration proceeding prior to the State's action and a full evidentiary hearing within 120 days after the action fully satisfies due process standards, as set forth by the United States Supreme Court in *Mathews* v. *Eldridge*, 424 U.S. 319 (1976), its recent leading case on due process requirements for governmental action terminating entitlement to payments under the Social Security Act.

In *Eldridge*, the Supreme Court made clear that due process does not require a full evidentiary pre-termination hearing. The Court reaffirmed that the fundamental requirement of due process is the opportunity to be heard "at a meaningful time and in a meaningful manner" prior to adverse governmental action. 424 U.S. at 333. But "the ordinary principle * * * is that something less than an evidentiary hearing is sufficient prior to adverse administrative action." 424 U.S. at 343. "All that is necessary is that the procedures be tailored, in light of the decision to be made to 'the capacities and circumstances of those who are to be heard,' * * * to insure that they are given a meaningful opportunity to present their case." 424 U.S. at 349.

The Court in *Eldridge* set forth three factors to be evaluated in deriving the specific requirements of due process for a given situation:

(1) The private interest involved;

(2) The reliability of the process in making correct determinations and the probable value of additional safeguards; and

(3) The Government's interest, including the fiscal and administration burdens of additional safeguards. 424 U.S. at 335.

In our view, the requirement that a full evidentiary hearing be completed within 120 days assures that the private interest of the nursing home is not subjected to long, severe deprivations. Moreover, the informal reconsideration assures a high degree of reliability for the State's action and safeguards against an erroneous termination, denial or nonrenewal. We be-

lieve that requiring a full evidentiary hearing prior to the State's action would add to the State's administrative and fiscal burdens, by precluding prompt action and by requiring the continuation of benefit payments pending a conclusion of the hearing, without adding significantly to the reliability of the State's decision.

Our views on the constitutionality of this process are supported by the recent decision of the United States Court of Appeals for the Third Circuit in *Town Court Nursing Center* v. *Beal*, Nos. 77-2221 and 77-2444 (decided September 29, 1978). In that case the Court of Appeals, relying on *Mathews* v. *Eldridge*, determined that a Medicare-Medicaid nursing home which had received the opportunity for reconsideration of the decision to terminate prior to termination and the opportunity for a full evidentiary post-termination hearing, had received full due process protection.

The cases cited by the commenters do not detract from this conclusion. Neither *Case* v. *Weinberger* nor *Hathaway* v. *Mathews* nor *Ross* v. *State of Wisconsin Department of Health & Social Services* address *Eldridge*. *Case* and *Ross* were decided prior to *Eldridge*. *Hathaway* was decided after *Eldridge* but the Court of Appeals in that case did not mention the decision. Indeed the *Town Court Nursing Center* opinion distinguishes *Hathaway* in part on the grounds that *Hathaway* did not treat the impact of *Eldridge* on the case before it.

*Comment:* One commenter felt that a pre-termination hearing was not justified in cases of serious health and safety threats to the patients in the facility.

*Response:* We are deeply concerned that nursing homes fully meet the high quality care standards set by the Federal statute and regulations. Nevertheless, we have determined that the regulations should not make any exception to the requirement that facilities be entitled to some review proceedings prior to exclusion. We believe that the regulations permit sufficient flexibility for the States to develop expedited reconsideration and hearing proceedings to be used in cases of serious health and safety deficiencies. Under the rules, States may develop their own timetables for these proceedings as long as they are reasonable and fall within the boundaries set out by the Federal rules. In addition, we believe that increasingly diligent State action in monitoring nursing home conditions and enforcing Federal standards should minimize the situations in which serious health and safety threats occur.

2. TIMING OF INFORMAL RECONSIDERATION AND EVIDENTIARY HEARING PROCEEDINGS

*Comment:* One commenter urged that the regulations specify how long before termination the informal reconsideration should take place. Another commentator argued that in order for a pretermination hearing to be held four months before termination, the state survey would have to occur five to six months prior to expiration of the agreement.

*Response:* The proposed regulations did permit, but not require, the States to hold full evidentiary hearings as early as four months before denial or termination. We believe that the commenter raises a valid point: a health and safety survey five or six months before the beginning of the new provider agreement term may be too far away in time to constitute a meaningful evaluation of the facility's status in that forthcoming term. Nonetheless, Federal rules do not specify the timing for a survey and particular circumstances may require greater flexibility in the timing of the appeals provisions before termination or nonrenewal. For that reason, the final regulations eliminate any particular time requirements for the appeals proceedings prior to an action, except that they be completed before the administrative action becomes effective.

We also considered and rejected specifying timetables for each phase of the appeals proceedings. We believe that leaving these matters to the States serves two useful purposes: it permits the States greater flexibility to adopt any existing appeals procedures which are consonant with these rules and it permits the States to consider their particular needs, including the number of facilities potentially involved and State staff workloads, in developing the required appeals procedures.

*Comment:* One commenter expressed the view that there would not be time to hold an informal hearing before termination, because the provider is entitled to have until the last day of the agreement to correct deficiencies.

*Response:* While the provider agreement may be valid until the end of its term, the survey agency may nonetheless inspect the facility at any time and, if the inspection reveals deficiencies, move to cancel the provider agreement. A facility with deficiencies is not entitled to remain in the program until the expiration of its provider agreement. Nor is it entitled to remain in the program after the expiration of its provider agreement pending the completion of a hearing. This informal process prior to a termination is intended to provide the facility with reasonable opportunity to convince the State that it should not be terminated, without hindering the State from taking prompt measures when necessary, subject to the full due process of an evidentiary hearing after the termination.

*Comment:* One commenter argued that the hearing process should be completed within a very short time after termination; another commenter felt that the Department should expand the allowable time period to provide for a hearing within eight months after termination.

*Response:* We believe that the time necessary to conduct properly a full evidentiary hearing is such that to shorten the time period during which the hearing must be held, after an action, to less than 120 days would place unrealistic requirements on the States. However, we also believe that an eight-month period is more time than should be necessary for the States and the facilities to prepare their cases to be brought to hearing, particularly in light of the fact that the record of the State's decision will necessarily have been developed and disclosed to the provider before its action.

3. ELEMENTS OF THE INFORMAL RECONSIDERATION AND FULL EVIDENTIARY HEARINGS PROCEEDINGS

*Comment:* One commenter felt that several of the terms used in the proposed regulations, for example, "informal reconsideration", "administrative hearing", and "full reexamination" have no generally accepted meanings and should be defined more fully in the regulations. Some commenters offered suggestions of the specific elements to be included in the evidentiary hearing: An impartial hearing officer; a hearing officer who is a licensed lawyer; a reviewer from another agency; a reviewer who is not an employee involved in decertification or nonrenewal actions; timely written notice to the provider of the claimed violations; disclosure to the provider of the evidence against it; the right of the provider to be represented by retained counsel; an opportunity for the provider to be heard in person and to present witnesses and documentary evidence; an opportunity for the parties to confront and cross-examine adverse witnesses; a written statement by the hearing officer as to the evidence relied on and reasons for the action taken; and issuance of a hearing decision within the applicable time frames.

*Response:* We agree that greater specification as to the nature of the informal reconsideration and full evidentiary hearings proceedings is needed. For that reason, the final rules do spell out more fully the minimum requisites for these processes.

States may add additional elements to them (for example, the opportunity for an oral meeting in the reconsideration proceeding), but they must afford at least the protections specified in the rules.

Under the new rules, an informal reconsideration proceeding must provide at least the following: Written notice to the provider; a reasonable opportunity for the facility to refute those reasons in writing; and issuance of the decision to the provider prior to the effective date of the action.

A full evidentiary hearing under the new rules must provide at least timely written notice to the provider of the basis for the action and disclosure of the evidence on which the action is taken; the right of the provider to appear before an impartial reviewer to refute those reasons; the right of the provider to be represented by counsel or another representative; the opportunity of the provider or its representatives to be heard in person, to call witnesses, and to present documentary evidence; the opportunity of the provider to cross-examine witnesses; and a written decision by the impartial decision maker setting forth the reasons for his decision and the evidence upon which he based that decision.

We have rejected the suggestion that the hearing officer be a licensed lawyer. We believe that the States should have flexibility in obtaining individuals with the qualifications to conduct the reconsideration and evidentiary hearing proceedings and that individuals other than lawyers might also serve well in this capacity.

We also believe that such impartial individuals may well be within the same agency holding the informal reconsideration or full evidentiary hearing proceeding and might well be involved generally in decertification or nonrenewal actions, and that that employment in itself should not bar an individual from serving as decision maker. We intend that the requirement of impartiality exclude any individual who has been directly involved (in a personal or supervisory capacity) in the survey or reconsideration of the facility being heard.

*Comment:* One commenter suggested that the regulations should provide for judicial review of the hearing decision.

*Response:* We believe that the decision whether there should be judicial review of these appeals proceedings should be left to State law, particularly in light of the diversity of appeals proceedings which might be established in accordance with these rules.

*Comment:* The proposed rules require the hearing to be held by the survey agency; the Medicaid agency should be allowed the option of being the hearing agency.

*Response:* The States should have flexibility in deciding how to formulate hearings proceedings, including use of a unified State hearing system. The State would have the responsibility of assuring that the agency performing this function had sufficient knowledge of and expertise on technical aspects of nursing home certification and provider agreement standards and processes.

*Comment:* The situations in which providers are entitled to an appeal are not clear when the Medicaid agency decides not to renew for reasons other than failure to meet certification standards.

*Response:* The final rules have been revised to clarify that the provider is entitled to an appeal not only of a certification decision, but also in the situation in which certification standards are met by the State, for other reasons (such as overbedding), decides not to issue the facility a provider agreement.

*Comment:* One commenter suggested that the hearing not be mandatory.

*Response:* We believe it is essential that there be a requirement that appeals proceedings be available. The facility is not required to pursue an appeal if it does not wish to.

*Comment:* One commenter suggested that the rules not apply to facilities in appeal status on the effective date of the new rule.

*Response:* We agree that it would be unduly disruptive of existing state hearings systems and proceedings to make these rules applicable to facilities against whom actions have already been taken. In order to provide adequate opportunity for the States to establish these procedures, the effective date of the rules will be delayed until 90 days after publication in the FEDERAL REGISTER. The appeals rules will apply to all facilities that are denied, terminated, or not reviewed after that date.

*Comment:* The appeals provisions should be expanded to cover audit adjustments of $5,000 or more.

*Response:* The final rules are designed to avoid injury which may result from an erroneous, total exclusion from the Medicaid program. Questions on audit exceptions would rarely have that impact and could well be decided after the action. In addition, many States have waived their sovereign immunity in contract actions and, therefore, other forums exist for a provider to achieve appropriate redress.

4. PROVISIONS APPLICABLE TO FACILITIES PARTICIPATING IN BOTH MEDICARE AND MEDICAID

*Comment:* Several commenters opposed these provisions. One suggested that they would require a State to continue a facility's Medicaid agreement for 30-60 days beyond its compliance with Federal standards and questioned the Secretary's authority under section 1910 of the Social Security Act to mandate State Medicaid expenditures for a facility which the State had found did not meet Medicaid standards.

*Response:* Section 1910 of the Social Security Act evinces a strong congressional policy that certification for Medicaid be coterminous with Medicare. The statute requires that whenever the Secretary certifies an institution in a State to be qualified as a SNF under Medicare, the institution shall be deemed to meet the standards for certification as a SNF for purposes of section 1902(a)(28). (See section 1910(a)(1) of the Act.) It also requires the Secretary to notify the State Medicaid agency of his approval or disapproval of any institution which has applied for certification by him as a qualified Medicare SNF. (Section 1910(a)(2) of the Act.) The Senate Report on this statutory provision states:

> The Committee's amendment provides, therefore, that determination of basic eligibility of skilled nursing homes under . . . [Medicaid] be made by the Secretary. S. Rep. No. 92-1230 (92nd Cong. 2d Sess. 286 (1972)).

The Secretary's determination of the certifiability of the nursing home must be binding on the Medicaid agency.

*Comment:* A commenter objected to a requirement that a Medicaid-Medicare facility must pursue Medicare administrative and judicial review procedures; the commenter challenged Medicare procedures on the ground that they are constitutionally deficient in not providing hearings before termination or nonrenewal.

*Response:* We believe that the extensive Medicare reconsideration and hearings proceedings fully satisfy due process standards. (*See Town Court Nursing Center* v. *Beal, supra.*) Nonetheless, we intend to issue a Notice of Proposed Rulemaking raising the question whether the Medicare reconsideration process should be completed prior to termination, nonrenewal, or denial.

*Comment:* A provider should be permitted to withdraw voluntarily from Medicare and still continue in Medicaid.

*Response:* We agree. It was not our intent to cover this situation in the NPRM, although we agree that the

language might have been read that way. We think our redraft of § 422.20(b) clarifies this point.

*Comment:* One commenter suggested that if Medicaid and Medicare agreements are to terminate at the same time, they should also begin at the same time.

*Response:* We believe that there is considerable merit to this suggestion and are considering the development of a notice of proposed rulemaking dealing with the question of the initial effective dates of Medicare and Medicaid provider agreements.

*Comment:* Since Medicaid termination is governed by Medicare, Medicare denial should be effective no sooner than the date on which the State agency receives actual notice of the action.

*Response:* Under section 1910, the effective date of Medicaid termination should be the date on which the Medicare action is effective. We intend to issue new instructions to Medicare staff to ensure immediate notice to the States of denial, nonrenewal, or termination actions. The final rules have been revised to make clear that Medicaid action must be effective on the same date as Medicare.

*Comment:* The State should be held harmless for any retroactive decertification of a facility by Medicare.

*Response:* Our policy is not to permit retroactive decertification of a facility; therefore, this problem should not arise in the future.

1. 42 CFR Part 431 is amended by adding a new Subpart D, to read as follows:

## PART 431—STATE ORGANIZATION AND GENERAL ADMINISTRATION

* * * * *

Subpart D—Appeals Process for SNF's and ICF's

Sec.
431.151 Scope and applicability.
431.152 State plan requirements.
431.153 Evidentiary hearing.
431.154 Informal reconsideration.

Subparts E-K—[Reserved]

* * * * *

AUTHORITY: Sec. 1102, Social Security Act (42 U.S.C. 1302).

### Subpart D—Appeals Process for SNF's and ICF's

§ 431.151 Scope and applicability.

This subpart specifies the appeal procedures the State must make available to a skilled nursing facility (SNF) or intermediate care facility (ICF) for which the State denies, terminates, or fails to renew certification or a provider agreement for the Medicaid program.

§ 431.152 State plan requirements.

The State plan must provide for appeals procedures that, as a minimum, satisfy the requirements of §§ 431.153 through 431.155.

§ 431.153 Evidentiary hearing.

(a) Except as specified in paragraph (d) of this section, any SNF or ICF whose certification or provider agreement is denied, terminated, or not renewed must be given an opportunity for a full evidentiary hearing on the denial, termination or nonrenewal.

(b) If the facility requests a hearing, it must be completed either before the effective date of the denial, termination or nonrenewal or within 120 days after that date.

(c) The hearing must, at a minimum, include—

(1) Timely written notice to the facility of the basis for the decision and disclosure of the evidence on which the decision is taken;

(2) An opportunity for the facility to appear before an impartial decision maker to refute the basis for the decision;

(3) An opportunity for the facility to be represented by counsel or another representative;

(4) An opportunity for the facility or its representatives to be heard in person, to call witnesses, and to present documentary evidence;

(5) An opportunity for the facility to cross-examine witnesses; and

(6) A written decision by the impartial decision maker, setting forth the reasons for the decision and the evidence upon which the decision is based.

(d) If a SNF is participating, or seeking to participate, in both Medicare and Medicaid, and if the basis for the State's denial, termination or nonrenewal of participation in Medicaid is also a basis for denial, termination or nonrenewal of participation in Medicare, the State must advise the facility that—

(1) The facility is entitled to the review procedures specified for Medicare facilities in Part 405, Subpart O of this title, in lieu of the procedures specified in this subpart; and

(2) A final decision entered under the Medicare review procedures will be binding for purposes of Medicaid participation.

§ 431.154 Informal reconsideration.

(a) If the State decides to provide the opportunity for an evidentiary hearing required by § 431.153 only after the effective date of a denial, termination or nonrenewal, the State must offer the facility an informal reconsideration, to be completed before the effective date.

(b) The informal reconsideration must, at a minimum, include—

(1) Written notice to the facility of the denial, termination or nonrenewal and the findings upon which it was based;

(2) A reasonable opportunity for the facility to refute those findings in writing, and

(3) A written affirmation or reversal of the denial, termination, or nonrenewal.

## PART 442—STANDARDS OF PAYMENT FOR SKILLED NURSING AND INTERMEDIATE CARE FACILITY SERVICES

2. 42 CFR 442.20(b) is revised to read as follows:

§ 442.20 Additional requirements for agreements with SNF's participating in Medicare.

* * * * *

(b) If the Secretary notifies the Medicaid agency that he has denied, terminated, or refused to renew a Medicare agreement with a SNF, the agency must deny, terminate, or refuse to renew its Medicaid agreement with that SNF. The denial, termination, or refusal to renew the Medicaid agreement must be effective on the same date as the denial, termination, or refusal to renew the Medicare agreement.

* * * * *

(Sec. 1102, Social Security Act (42 U.S.C. 1302))

(Catalog of Federal Domestic Assistance Program No. 13.714, Medical Assistance Program.)

Dated: December 4, 1978.

LEONARD D. SCHAEFFER,
*Administrator, Health Care Financing Administration.*

Approved: February 7, 1979.

JOSEPH A. CALIFANO, Jr.,
*Secretary.*

[FR Doc. 79-4958 Filed 2-14-79; 8:45 am]

---

[6315-01-M]

## Title 45—Public Welfare

## CHAPTER X—COMMUNITY SERVICES ADMINISTRATION

## PART 1067—FUNDING OF CSA GRANTEES

## Subpart—Criteria for Determining the Delegation of Grant and Contract Making Authority to Regional Directors

AGENCY: Community Services Administration.

ACTION: Final rule.

SUMMARY: The Community Services Administration is filing a rule establishing criteria for delegating grant and contract making authority to Regional Directors. The proposed rule implements a 1978 Amendment to Section 601(c) of the Economic Opportunity Act of 1964, as amended, requiring the Director to promulgate rules and regulations regarding the final approval of grants and contracts. The effect of the rule is to allow for decentralization of authority to approve grants and contracts for which authority has been delegated to the Assistant Director for Community Action by delegating concurrent authority to Directors of Regional Offices meeting the stated criteria.

DATES: Effective date: This rule is effective March 19, 1979, since this affects CSA internal administration only. However, comments are welcome and will be considered in any future revision of the rule. Comments must be submitted on or before March 19, 1979.

ADDRESS: Send comments to: Joan Lenihan, Community Services Administration, Office of Community Action, 1200 19th Street, N.W., Washington, D.C., 20506.

FOR FURTHER INFORMATION CONTACT:

Joan Lenihan, Tel. (202) 254-5670, Teletypewriter: (202) 254-6218.

SUPPLEMENTARY INFORMATION: Section 601(c) of the Community Services Act of 1974 prohibited delegation of grant and contract making authority after June 15, 1975 to any regional official. The change created difficulty in maintaining accountability as grants and contracts were administered by Regional Offices, detailed records of eligibility and compliance status were located at those offices, but funding decisions were made at the Headquarters level by the Assistant Director for Community Action. However, the Economic Opportunity Amendments of 1978 returned authority to the Director to delegate grant and contract making authority to those officials, provided the Director promulgated rules and regulations regarding final approval of grants and contracts. This rule is designed to provide criteria which can be used by the Assistant Director for Community Action in determining whether grant and contract making power should be delegated to a regional official, after consultation with the Director.

(The provisions of this subpart are issued under the authority of sec. 602, 78 Stat. 530; 42 U.S.C. 2942)

GRACIELA (GRACE) OLIVAREZ,
*Director.*

45 CFR 1067 is amended by adding a new subpart as follows:

Subpart—Criteria for Determining the Delegation of Grant and Contract Making Authority to Regional Directors

Sec.
1067.61-1 Applicability.
1067.61-2 Policy.

## Subpart—Criteria for Determining the Delegation of Grant and Contract Making Authority to Regional Directors

AUTHORITY: Sec. 692, 78 Stat. 530; 42 U.S.C. 2942.

### § 1067.61-1 Applicability.

The criteria established in this subpart will be used to determine delegation of authority to Regional Directors for the approval of grants and contracts made under any section of the Economic Opportunity Act of 1964, as amended, for which funding authority has been delegated to the Assistant Director for Community Action.

### § 1067.61-2 Policy.

The determination whether to delegate grant and contract making authority to Regional Directors will be made by the Assistant Director for Community Action based on the following criteria:

(a) Whether the Regional Office has internal management systems adequate for the purpose of controlling obligations, processing applications and maintaining records. A Regional Office must have an acceptable funding plan, an acceptable allotment control register, established procedures to receive and process applications in a timely manner and records adequate to accurately reflect the status of grants, amendments thereto, and grantee compliance;

(b) Whether the Regional Office has grantee eligibility and compliance certification procedures adequate to insure that major eligibility and compliance areas are reviewed prior to funding and that issues are resolved in a timely manner. This must include an acceptable system for the timely review and resolution of audit problems, and a satisfactory human rights plan for grantees; and

(c) Whether the Regional Office has an acceptable plan for overseeing grantee programs. Regional Offices must establish and carry out an oversight plan, including field visits to provide technical assistance; to assess, in accordance with CSA requirements, grantee planning, proposed work programs, performance, eligibility and compliance; etc.

[FR Doc. 79-4676 Filed 2-14-79; 8:45 am]

---

[6712-01-M]

## Title 47—Telecommunication

## CHAPTER I—FEDERAL COMMUNICATIONS COMMISSION

[FCC 79-16]

## PART 19—EMPLOYEE RESPONSIBILITIES AND CONDUCT

### Employees Outside Activity or Employment

AGENCY: Federal Communications Commission.

ACTION: Final rule.

SUMMARY: Recognizing that its rules may have discouraged past publishing activities by employees or appeared to do so, the FCC has amended its rules governing such activities. A prohibition on activities which will cause unfavorable and reasonable criticism of the Commission has been deleted. A prohibition against activities which reasonably might be regarded as official Commission actions or will bring discredit upon the Commission has been modified so as not to apply to publishing activities. A procedure for prior clearance of articles submitted for publication has been replaced by the requirement of a disclaimer disassociating the Commission from the article, if it identifies the author as a Commission employee. The use for an employee's private gain of publications which relate to his official responsbilities has been prohibited.

EFFECTIVE DATE: February 21, 1979.

ADDRESSES: Federal Communications Commission, Wash., D.C. 20554.

FOR FURTHER INFORMATION CONTACT:

Upton Guthery, Federal Communications Commission, Office of General Counsel, 202-632-6444.

SUPPLEMENTARY INFORMATION:

Adopted: January 17, 1979.

Released: February 8, 1979.

*Order.* In the matter of amendment of § 19.735-203 rules and regulations.

1. We have recently completed a review of procedures and restrictions relating to the publication of articles by members of the Commission or its staff which are set out in § 19.735-203 of the rules (47 CFR 19.735-203) and have decided to eliminate or modify certain of those provisions which may have either discouraged past publishing activities or have appeared to do so.

2. Section 19.735-203(a)(3) has heretofore prohibited outside activities which "reasonably might be regarded as official Commission actions, or which will bring discredit upon, or cause unfavorable and reasonable criticism of, the Commission or the Government." This provision is being amended so as not to apply to publishing activities and to delete entirely the prohibition on activities which will cause "unfavorable and reasonable criticism." Commissioners and employees will continue to be subject to the general prohibition against outside activity "which is in conflict with or otherwise not compatible with the full and proper discharge of (their) duties and responsibilities" as employees (§ 19.735-203(a)). This provision is taken from the rules of the Civil Service Commission (5 CFR 735.203(a)), which are applicable to all Government employees.

3. Section 19.735-203(c) has heretofore required prior approval of articles which will identify the author with the Commission. This provision is being replaced by a requirement that articles identifying the author as a Commission employee include a disclaimer disassociating the Commission from the article and the views expressed therein. Section 19.735-203(c) is being amended further to provide that publications which relate to an employee's official duties shall not be used for his private gain.

4. Authority for adoption of these amendments is contained in Sections 4(i) and 303(r) of the Communications Act of 1934, as amended, 47 U.S.C. 154(i) and 303(r). Because they are procedural in nature and/or concern internal agency administrative matters, compliance with the prior notice and effective date provisions of 5 U.S.C. 553 is unnecessary.

5. *Accordingly, it is ordered,* Effective February 21, 1979, That Section 19.735-203 is amended as set out below.

FEDERAL COMMUNICATIONS COMMISSION,
WILLIAM J. TRICARICO,
*Secretary.*

In § 19.735-203 of Part 19 of Chapter I of Title 47 of the Code of Federal Regulations, paragraphs (a)(3) and (c) are revised to read as follows:

§ 19.735-203 Outside employment and other activity.

(a) * * *

(3) Outside employment or activities (excluding the publication of articles) which reasonably might be regarded as official actions or bring discredit upon the Commission.

* * * * *

(c) Employees of the Commission are encouraged to engage in teaching, lecturing and writing that is not prohibited by law, the Executive Order, the Civil Service Regulations or the provisions of this chapter. However, an employee shall not, either with or without compensation, engage in teaching, lecturing or writing (including such as is involved in the preparation of a person or class of persons for a Civil Service or Foreign Service examination) that is dependent on information obtained as a result of his Government employment, except when that information has been made available to the general public or will be made available on request, or when the Chairman gives written authorization for the use of non-public information on the basis that its use is in the public interest. Except in the case of a Commissioner, articles which identify the author as a Commission employee shall include the following disclaimer:

The views expressed are those of the author and do not necessarily reflect the views of the Commission.

Documents prepared in the course of, and publications relating to, an employee's official duties shall not be used for his private gain. In addition, the Commissioners shall not receive compensation or anything of monetary value for any consultation, lecture, discussion, writing, or appearance the subject matter of which is devoted substantially to the responsibilities, programs, or operations of the Commission, or which draws substantially on official data or ideas which have not become part of the body of public information. (See also 47 U.S.C. 154(b) and § 735.203(b)(2)).

[FR Doc. 79-4943 Filed 2-14-79; 8:45 am]

---

[4910-06-M]

## Title 49—Transportation

## SUBTITLE A—OFFICE OF THE SECRETARY OF TRANSPORTATION

[Docket No. OST 16]

## PART 99—EMPLOYEE RESPONSIBILITIES AND CONDUCT

### Appendix C—List of Employees Required To Submit Statements of Employment and Financial Interests

AGENCY: Federal Railroad Administration (FRA), Department of Transportation (DOT).

ACTION: Final rule.

SUMMARY: The purpose of this rule is to revise Appendix C of DOT's regulations governing employee conflict of interest. This rule makes several changes to the list of FRA positions, the incumbents of which are required to submit statements of employment and financial interests.

EFFECTIVE DATE: February 15, 1979.

FOR FURTHER INFORMATION CONTACT:

Principal Attorneys: Frederick Millhiser (202-426-8220), and Mary Mix-Livingston (202-472-5305), Office of Chief Counsel, FRA. Principal Program Persons: Robert S. Sherman, Chief, Labor/Employee Relations Division, Office of Personnel and Training, FRA (202-755-7690); and Stephen R. Oldham, Chief, Employment Division, Office of Personnel and Training, FRA (202-426-9771).

SUPPLEMENTARY INFORMATION: This rule is published to discharge the responsibility of the Federal Railroad Administrator, under 49 CFR 99.735-31(b), to ensure that the portion of Appendix C which enumerates the FRA employees who must submit statements of employment and financial interests is current and accurate.

This rule amends Appendix C so as to include additional positions, some of which are occupied by incumbents classified below GS-13, for which statements were not previously required. These additions were made in order to include employees engaged in decisions and actions which have an economic impact on the interests of a non-Federal enterprise. Written Civil Service Commission approval has been sought and received for inclusion of positions occupied by employees classified below GS-13.

Since this amendment relates to Departmental management, procedures and practices, notice and public procedures are unnecessary and it may be made effective before March 19, 1979.

In consideration of the foregoing, Part 99 of Title 49 Code of Federal Regulations, is amended by revising Appendix C, Section VI, to read as set forth below.

(Sec. 9(e), Department of Transportation Act, 49 U.S.C. 1657(e); 49 CFR 99.735-31(b))

VI. FEDERAL RAILROAD ADMINISTRATION

OFFICE OF THE ADMINISTRATOR

Deputy Administrator
Special Assistant to the Administrator, GS-13 and above
Director, Special Projects Staff
Executive Director, Minority Business Resource Center
Civil Rights Officer
Public Affairs Officer

OFFICE OF PLANNING AND BUDGET DEVELOPMENT

Director
Chief, Budget Development Division
Chief, Planning Division
Chief, Program Review Division

OFFICE OF ADMINISTRATION

Associate Administrator
Director, Office of Procurement
Supervisory Contract Specialist, GS-14 and above
Contract Specialist, GS-13
Director, Office of Management Systems
Director, Office of Financial and Administrative Services
Director, Office of Personnel and Training
Auditor

OFFICE OF CHIEF COUNSEL

Chief Counsel
Deputy Chief Counsel
Assistant Chief Counsel, Safety Regulation Division
Assistant Chief Counsel, Enforcement Division
Assistant Chief Counsel, General Law Division
Assistant Chief Counsel, Freight Economics and Finance Division
Assistant Chief Counsel, Intercity Passenger Programs Division

OFFICE OF FEDERAL ASSISTANCE

Associate Administrator
Financial Analyst GS-15
Director, Office of National Freight Assistance Programs
Director, Office of State Assistance Programs
Chief, State Planning Assistance Division
Chief, Financial Analysis and Administration Division
Chief, State Programs Division
Chief, Special Programs Division
Chief, Rail Passenger Programs Division

NORTHEAST CORRIDOR PROJECT

Director
Deputy Director
Associate Directors
Chief, Operations Staff
Chief, Project Control Division
Chief, Planning and Analysis Division
Chief, Design Division
Chief, Construction Division
Chief, Systems Engineering Division
Program Manager, Philadelphia

OFFICE OF RESEARCH AND DEVELOPMENT

Associate Administrator
Director, Office of Freight Systems
Director, Office of Passenger Systems
Director, Office of Rail Safety Research

OFFICE OF POLICY AND PROGRAM DEVELOPMENT

Associate Administrator
Deputy Associate Administrator
Director, Office of Capital Policy and Planning
Director, Office of Systems Analysis and Information
Director, Office of Economics and Operations Policy

OFFICE OF SAFETY

Associate Administrator
Deputy Associate Administrator
Director, Office of Safety Programs
Director, Office of Standards Procedures

REGIONAL OFFICES

Regional Administrators
Directors of Railroad Safety
Directors of Federal Assistance
Supervisory Railroad Safety Inspectors
Railroad Safety Inspection Specialists
Railroad Safety Inspectors, GS-11/12

TRANSPORTATION TEST CENTER

Director
Chief, Facility Management Division
Contract Specialist

ALASKA RAILROAD

General Manager
Assistant General Manager
Chief, Administration Division
Real Estate Officer
Chief, Contracts and Procurement
Chief Counsel
Traffic Officer
Operations Officer
Assistant Operations Officer—(Northern Region)
Chief Engineer
Assistant Chief Engineer
Chief Mechanical Officer
General Mechanical Foreman—(Fairbanks)
Transportation Officer
Chief, Budget and Accounting
Supply Officer
Chief, Data Processing
General Attorney
Freight Agent, Anchorage

Issued in Washington, D.C. on February 8, 1979.

JOHN M. SULLIVAN,
*Federal Railroad Administrator.*

[FR Doc. 79-4953 Filed 2-14-79; 8:45 am]

---

[4910-60-M]

## CHAPTER I—RESEARCH AND SPECIAL PROGRAMS ADMINISTRATION, DEPARTMENT OF TRANSPORTATION, MATERIALS TRANSPORTATION BUREAU

[Docket No. HM-151A, Amdt. No. 172-50]

## PART 172—HAZARDOUS MATERIALS TABLE AND HAZARDOUS MATERIALS COMMUNICATIONS REGULATIONS

### Label and Placard Colors

AGENCY: Materials Transportation Bureau, Research and Special Programs Administration, DOT.

ACTION: Final rule.

SUMMARY: This rule restates requirements applicable to colors specified for labels printed directly onto the surfaces of packagings used in the transportation of hazardous materials.

Existing standards prescribing colors required to appear on hazardous materials warning labels and placards are color tolerance charts displaying the colors represented by Munsell notations as the basis for evaluating compliance.

The quality of colors of labels printed on the various materials used to manufacture boxes, bags and other packagings have proved difficult to control, because of the printing processes which must be used and the porosity and pigmentation of such surfaces. Therefore, a two-year suspension of the color standards was provided for labels printed directly onto the surfaces of packagings so that adjustments to printing techniques and inks could be made and, if necessary, so modification to the color standards could be made (42 FR 34283, July 5, 1977). This final rule contains color standards for such hazard warning labels to replace those existing standards that would otherwise apply on and after March 1, 1979.

DATES: The provisions of this rule are effective March 19, 1979.

ADDRESS COMMENTS TO: Dockets Branch, Materials Transportation Bureau, Washington, D.C. 20590. It is requested that five copies be submited.

FOR FURTHER INFORMATION CONTACT:

Douglas A. Crockett, Standards Division, Office of Hazardous Materials Regulation, Washington, D.C. 20590 (phone: 202-426-2075).

SUPPLEMENTARY INFORMATION: A color standard for label and placard colors was published as a final rule under Docket No. HM-103/112 on April 15, 1976 (41 FR 15972), compliance with which became mandatory on January 1, 1977. That standard, proposed in 1974 under Docket No. HM-103 (39 FR 3164, January 24, 1974) and amended by Docket No. HM-151 (42 FR 34283, July 5, 1977), involved two series of color charts provided by DOT that display standard colors. The colors on the charts are also numerically described by Tables 1 and 2 of Appendix A to Part 172 through certain technical specifications (Munsell notations). The visual display on each chart incorporates a degree of latitude, or tolerance, to account for variations in printing materials and processes and to serve as a visual control on label and placard colors, while the Munsell notations were provided to ensure constancy and reproducibility of the Color Tolerance Charts.

In 1976 it became necessary to suspend that standard so far as it applied to labels printed directly onto the surfaces of a packaging, because such surfaces could not be controlled for printing purposes without great expense. Fiberboard, for example, is both pigmented and porous, with the result that pigments applied to it are absorbed and their visual effects modi-

fied. The suspension terminates on March 1, 1979, at which time the previously published standard applies. During the suspension, several trade associations concerned with aspects of packaging manufacture have examined existing conditions and have recommended to the Materials Transportation Bureau (Bureau) that the previously published standard be modified to account for the difficulties encountered in printing on kraft and fiberboard.

This amendment contains a color standard recommendation that was developed during the past 18 months by representatives of the container Corporation of America, the Fibre Box Association and the Paper Shipping Sack Manufacturing Association. The Bureau has reviewed this recommendation, finds it reasonably consistent with the existing standard, and adopts it. To produce this recommended standard, inks were selectively obtained and mixed and an improved quality control was used in the printing processes. Although reproduction of the previously published DOT color tolerances was the object of this industry effort, the printing processes and the porosity and pigmentation variations of kraft paper and fiberboard surfaces necessitate new color tolerances. Similar difficulties have caused these associations to advise that they are not able to produce color tolerance charts for visual reference for compliance. Consequently, the color tolerances developed in this manner are represented in Table 3 by Commission Internationale de L'Eclariage (C.I.E.) coordinates only. DOT will use the existing color charts for compliance purposes, although resort to instrumentation will be necessary where an initial visual reference indicates that the colors of a label printed on a packaging surface are improper.

To assist those who may prefer instrumentation to ensure compliance with color requirements for placards and for labels which are not printed on packaging surfaces, the C.I.E. coordinates have been added to the Munsell notation for the existing Color Tolerance Charts (see new Tables 1 and 2). This will result in C.I.E. coordinates being available for instrumentally evaluating all hazardous materials warning labels and placards.

Although the work described above was performed with variations of kraft and fiberboard surfaces, the Bureau has made the standards applicable to labels printed on any packaging surface, regardless of the substrate. Kraft paper and fiberboard represents the most difficult case, but other situations may exist wherein the manufacturer's inability to select a printing substrate, due to structural requirements and economic factors affecting packaging construction, may result in deviations from the previously published standard. The temporary two-year suspension of the previously published standard has been extended to July 1, 1979, to allow time for packaging manufacturers to modify their processes to bring them into compliance with the new standard published in this document. However, they have a choice of compliance with either Table 1, 2, or with Table 3.

Since the previously published standard would otherwise apply to labels printed on packaging surfaces after March 1, 1979, the less restrictive standards published in this document constitute a relaxation of existing requirements. This amendment is not expected to impose any additional costs or burdens on the public, industry or government, or to have any significant environmental or economic impact. The amendment in fact results from petitions received from the fiberboard and kraft paper packaging industries. In view of the above, the Bureau finds that public notice is unnecessary. However, comments are welcome and should be sent to the address indicated earlier.

Primary drafters of this document are Lee E. Metcalfe and Douglas A. Crockett, Office of Hazardous materials Regulation.

In view of the foregoing, Part 172 of Title 49, Code of Federal Regulations, is amended as follows:

1. In § 172.407 paragraph (d)(5) is revised to read as follows:

§ 172.407 Label specifications.

* * * * *

(d) * * *

(5) The requirements of paragraph (d) of this section do not apply to labels printed directly onto the surface of a packaging before July 1, 1979: *Provided*, The colors of such labels comply with the appropriate colors described in §§ 172.411 through 172.450. Such labels printed on or after July 1, 1979, must comply with color specifications in one of the appropriate tables in Appendix A to this Part.

* * * * *

2. In Appendix A to Part 172, the headings and Tables 1 and 2 are revised: Table 3 is added to read as follows:

APPENDIX A—HAZARDOUS MATERIALS COLOR TOLERANCE TABLES

* * * * *

TABLE 1.—*Paint, Lacquer, Enamel, and Plastic Color Specifications in Munsell Notations and CIE Coordinates*[1]

| Color | Munsell notations | CIE data for source C | | |
|---|---|---|---|---|
| | | Y | x | y |
| Red: | | | | |
| Central color | 7.5R 4.0/14 | 12.00 | .5359 | 3269 |
| Orange | 8.5R 4.0/14 | 12.00 | .6937 | 3389 |
| Purple and vivid | 6.5R 4.0/14 | 12.00 | .5869 | .3184 |
| Grayish | 7.5R 4.0/12 | 12.00 | .5603 | .3321 |
| Vivid | 7.5R 4.0/16 | 12.00 | .6260 | .3192 |
| Light | 7.5R 4.5/14 | 15.57 | .5775 | .3320 |
| Dark | 7. 5R 3.5/14 | 09.00 | .6226 | .3141 |
| Orange: | | | | |
| Central color | 5.OYR 6.0/15 | 30.05 | .5510 | .4214 |
| Yellow and Grayish | 6.25YR 6.0/15 | 30.05 | .5452 | .4329 |
| Red and vivid | 3.75YR 6.0/15 | 30.05 | .5552 | .4091 |
| Grayish | 5.OYR 6.0/13 | 30.05 | .5311 | .4154 |
| Vivid | 5.OYR 6.0/16 | 30.05 | .5597 | .4239 |
| Light | 5.OYR 6.5/15 | 36.20 | .5427 | .4206 |
| Dark | 5.OYR 5.5/15 | 24.58 | .5606 | .4218 |
| Yellow: | | | | |
| Central color | 5.OY 8.0/12 | 59.10 | .4562 | .4788 |
| Green | 6.5Y 8.0/12 | 59.10 | .4498 | .4865 |
| Orange and vivid | 3.5Y 8.0/12 | 59.10 | .4632 | .4669 |
| Grayish | 5.OY 8.0/10 | 59.10 | .4376 | .4601 |
| Vivid | 5.OY 8.0/14 | 59.10 | .4693 | .4920 |
| Light | 5.OY 8.5/12 | 63.40 | .4508 | .4754 |
| Dark | 5.OY 7.5/12 | 50.63 | .4620 | .4823 |
| Green: | | | | |
| Central color | 7.5G 4.0/9 | 12.00 | .2111 | .4121 |
| Bluish | 0.5BG 4.0/9 | 12.00 | .1974 | .3809 |
| Green-yellow | 5.0G 4.0/9 | 12.00 | 2237 | .4399 |
| Grayish A | 7.5G 4.0/7 | 12.00 | .2350 | .3922 |
| Grayish B [2] | 7.5G 4.0/6 | 12.00 | .2467 | .3822 |
| Vivid | 7.5G 4.0/11 | 12.00 | .1848 | .4319 |
| Light | 7.5G 4.5/9 | 15.57 | .2204 | .4060 |
| Dark | 7.5G 3.5/9 | 09.00 | .2027 | .4163 |
| Blue: | | | | |
| Central color | 2.5PB 3.5/10 | 0.900 | .1691 | .1744 |
| Purple | 4.5PB 3.5/10 | 0.900 | .1793 | .1711 |
| Green and vivid | 10.0B 3.5/10 | 0.900 | .1557 | .1815 |
| Grayish | 2.5PB 3.5/8 | 0.900 | .1633 | .1964 |
| Vivid | 2.5PB 3.5/12 | 0.900 | .1516 | .1547 |
| Light | 2.5PB 4.0/10 | 12.00 | .1605 | .1888 |
| Dark | 2.5PB 3.0/10 | 0.655 | .1576 | .1660 |

TABLE 1.—*Paint, Lacquer, Enamel, and Plastic Color Specifications in Munsell Notations and CIE Coordinates* [1]—Continued

| Color | Munsell notations | CIE data for source C | | |
|---|---|---|---|---|
| | | Y | x | y |
| Purple: | | | | |
| Central color | 10.0P 4.5/10 | 15.57 | .3307 | .2245 |
| Reddish purple | 2.5RP 4.5/10 | 15.57 | .3584 | .2377 |
| Blue purple | 7.5P 4.5/10 | 15.57 | .3068 | .2145 |
| Reddish gray | 10.0P 4.5/8 | 15.57 | .3280 | .2391 |
| Gray [2] | 10.0P 4.5/6.5 | 15.57 | .3254 | .2519 |
| Vivid | 10.0P 4.5/12 | 15.57 | .3333 | .2101 |
| Light | 10.0P 5.0/10 | 19.77 | .3308 | .2328 |
| Dark | 10.0P 4.0/10 | 12.00 | .3306 | .2162 |

[1] Maximum chroma is not limited.

[2] For the colors green and purple, the minimum saturation (chroma) limits for porcelain enamel on metal are lower than for most other surface coatings. Therefore, the minimum chroma limits of these two colors as displayed on the Charts for comparison to porcelain enamel on metal is low, as shown for green (grayish B) and purple (gray).

NOTE.—CIE=Commission Internationale de L'Eclairage.

TABLE 2.—*Specifications and CIE Coordinates for Color Tolerance Charts for Use With Labels and Placards Surfaced With Ink*

| Color/series | Munsell notation | CIE data for source C | | |
|---|---|---|---|---|
| | | Y | x | y |
| Red: | | | | |
| Central series: | | | | |
| Central color | 6.8R 4.47/12.8 | 15.34 | .5510 | .3286 |
| Grayish | 7.2R 4.72/12.2 | 17.37 | .5368 | .3348 |
| Purple | 6.4R 4.49/12.7 | 15.52 | .5442 | .3258 |
| Purple and vivid | 6.1R 4.33/13.1 | 14.25 | .5529 | .3209 |
| Vivid | 6.7R 4.29/13.2 | 13.99 | .5617 | .3253 |
| Orange | 7.3R 4.47/12.8 | 15.34 | .5572 | .3331 |
| Orange and grayish | 7.65R 4.70/12.4 | 17.20 | .5438 | .3382 |
| Light series: | | | | |
| Light | 7.0R 4.72/13.2 | 17.32 | .5511 | .3322 |
| Light and orange | 7.4R 4.96/12.6 | 19.38 | .5365 | .3382 |
| Light and purple | 6.6R 4.79/12.9 | 17.94 | .5397 | .3289 |
| Dark series: | | | | |
| Dark A | 6.7R 4.19/12.5 | 13.30 | .5566 | .3265 |
| Dark B | 7.0R 4.25/12.35 | 13.72 | .5522 | .3294 |
| Dark and purple | 7.5R 4.23/12.4 | 13.58 | .5577 | .3329 |
| Orange: | | | | |
| Central series: | | | | |
| Central color | 5.0YR 6.10/12.15 | 31.27 | .5193 | .4117 |
| Yellow and grayish A | 5.8YR 6.22/11.7 | 32.69 | .5114 | .4155 |
| Yellow and grayish B | 6.1YR 6.26/11.85 | 33.20 | .5109 | .4190 |
| Vivid | 5.1YR 6.07/12.3 | 30.86 | .5226 | .4134 |
| Red and vivid A | 3.9YR 5.87/12.75 | 28.53 | .5318 | .4038 |
| Red and vivid B | 3.6YR 5.91/12.6 | 29.05 | .5291 | .4021 |
| Grayish | 4.9YR 6.10/11.9 | 31.22 | .5170 | .4089 |
| Light series: | | | | |
| Light and vivid A | 5.8YR 6.78/12.7 | 39.94 | .5120 | .4177 |
| Light and yellow | 6.0YR 6.80/12.8 | 40.20 | .5135 | .4198 |
| Light and vivid B | 4.9YR 6.60/12.9 | 37.47 | .5216 | .4126 |
| Dark series: | | | | |
| Dark and yellow | 5.8YR 5.98/11.0 | 29.87 | .5052 | .4132 |
| Dark A | 5.1YR 5.80/11.1 | 27.80 | .5127 | .4094 |
| Dark B | 5.0YR 5.80/11.0 | 27.67 | .5109 | .4068 |
| Yellow: | | | | |
| Central series: | | | | |
| Central color | 4.3Y 7.87/10.3 | 56.81 | .4445 | .4589 |
| Vivid A | 4.5Y 7.82/10.8 | 55.92 | .4503 | .4658 |
| Vivid B | 3.3Y 7.72/11.35 | 54.24 | .4612 | .4624 |
| Vivid and orange | 3.2Y 7.72/10.8 | 54.25 | .4576 | .4572 |
| Grayish A | 4.1Y 7.95/9.7 | 58.18 | .4380 | .4516 |
| Grayish B | 5.1Y 8.06/9.05 | 60.12 | .4272 | .4508 |
| Green-yellow | 5.2Y 7.97/9.9 | 58.53 | .4356 | .4605 |
| Light series: | | | | |
| Light | 5.4Y 8.59/10.5 | 70.19 | .4351 | .4628 |
| Light and green-yellow | 5.4Y 8.56/11.2 | 69.59 | .4414 | .4692 |
| Light and vivid | 4.4Y 8.45/11.4 | 67.42 | .4490 | .4662 |
| Dark series: | | | | |
| Dark and green-yellow | 4.4Y &.57/9.7 | 51.82 | .4423 | .4562 |
| Dark and orange A | 3.4Y 7.39/104 | 48.86 | .4584 | .4590 |
| Dark and orange B | 3.5Y 7.41/10.0 | 49.20 | .4517 | .4544 |
| Green: | | | | |
| Central series: | | | | |
| Central color | 9.75G 4.26/7.75 | 13.80 | .2214 | .3791 |
| Grayish | 10G 4.46/7.5 | 15.25 | .2263 | .3742 |
| Blue A | 1.4BG 4.20/7.4 | 13.36 | .2151 | .3625 |
| Blue B | 1.0BG 4.09/7.75 | 12.60 | .2109 | .3685 |
| Vivid | 8.4G 4.09/8.05 | 12.59 | .2183 | .3954 |
| Vivid green-yellow | 7.0G 4.23/8.0 | 13.54 | .2292 | .4045 |
| Green-yellow | 7.85G 4.46/7.7 | 15.23 | .2313 | .3914 |

TABLE 2.—*Specifications and CIE Coordinates for Color Tolerance Charts for Use With Labels and Placards Surfaced With Ink*—Continued

| Color/series | Munsell notation | CIE data for source C | | |
|---|---|---|---|---|
| | | Y | x | y |
| Light series: | | | | |
| Light and vivid | 9.5G 4.45/8.8 | 15.21 | .2141 | .3863 |
| Light and blue | 0.2BG 4.31/8.8 | 14.12 | .2059 | .3814 |
| Light and green-yellow | 8.3G 4.29/9.05 | 14.01 | .2219 | .4006 |
| Dark series: | | | | |
| Dark and green-yellow | 7.1G 4.08/7.1 | 12.55 | .2354 | .3972 |
| Dark and grayish | 9.5G 4.11/6.9 | 12.70 | .2232 | .3764 |
| Dark | 8.5G 3.97/7.2 | 11.78 | .2269 | .3874 |
| Blue: | | | | |
| Central series: | | | | |
| Central color | 3.5PB 3.94/9.7 | 11.53 | .1885 | .1911 |
| Green and grayish A | 2.0PB 4.35/8.7 | 14.41 | .1962 | .2099 |
| Green and grayish B | 1.7PB 4.22/9.0 | 13.50 | .1898 | .2053 |
| Vivid | 2.9PB 3.81/9.7 | 10.78 | .1814 | .1852 |
| Purple and vivid A | 4.7PB 3.53/10.0 | 9.15 | .1817 | .1727 |
| Purple and vivid B | 5.0PB 3.71/9.9 | 10.20 | .1833 | .1788 |
| Grayish | 3.75PB 4.03/9.1 | 12.17 | .1943 | .1961 |
| Light series: | | | | |
| Light and green A | 1.7PB 4.32/9.2 | 14.22 | .1904 | .2056 |
| Light and green B | 1.5PB 4.11/9.6 | 12.72 | .1815 | .1971 |
| Light and vivid | 3.2PB 3.95/10.05 | 11.70 | .1831 | .1868 |
| Dark series: | | | | |
| Dark and grayish | 3.9PB 4.01/8.7 | 12.04 | .1982 | .1992 |
| Dark and purple A | 4.8PB 3.67/9.3 | 9.95 | .1918 | .1831 |
| Dark and purple B | 5.2PB 3.80/9.05 | 10.76 | .1985 | .1885 |
| Purple: | | | | |
| Central series: | | | | |
| Central color | 9.5P 4.71/11.3 | 17.25 | .3274 | .2165 |
| Red | 1.0RP 5.31/10.8 | 22.70 | .3404 | .2354 |
| Red and vivid A | 1.4RP 5.00/11.9 | 19.78 | .3500 | .2274 |
| Red and vivid B | 0.2RP 4.39/12.5 | 14.70 | .3365 | .2059 |
| Vivid | 8.0P 4.04/12.0 | 12.23 | .3098 | .1916 |
| Blue | 7.0P 4.39/10.8 | 14.71 | .3007 | .2037 |
| Grayish | 8.8P 5.00/10.3 | 19.73 | .3191 | .2251 |
| Light series: | | | | |
| Light and red A | 0.85RP 5.56/11.1 | 25.18 | .3387 | .2356 |
| Light and red B | 1.1RP 5.27/12.3 | 22.27 | .3460 | .2276 |
| Light and vivid | 9.2P 4.94/11.95 | 19.24 | .3247 | .2163 |
| Dark series: | | | | |
| Dark and grayish | 9.6P 4.70/10.9 | 17.19 | .3283 | .2204 |
| Dark and vivid | 8.4P 4.05/11.6 | 12.35 | .3144 | .1970 |
| Dark and blue | 7.5P 4.32/10.5 | 14.19 | .3059 | .2078 |

TABLE 3.—*Specification for Colors for Use With Labels Printed on Packagings Surfaces*

| CIE data for source C | Red | Orange | Yellow | Green | Blue | Purple |
|---|---|---|---|---|---|---|
| x | .424 | .460 | .417 | .228 | .200 | .377 |
| y | .306 | .370 | .392 | .354 | .175 | .205 |
| x | .571 | .543 | .490 | .310 | .255 | .377 |
| y | .306 | .400 | .442 | .354 | .250 | .284 |
| x | .424 | .445 | .390 | .228 | .177 | .342 |
| y | .350 | .395 | .430 | .403 | .194 | .205 |
| x | .571 | .504 | .440 | .310 | .230 | .342 |
| y | .350 | .430 | .492 | .403 | .267 | .284 |
| Y (high) | 23.0 | 41.6 | 72.6 | 20.6 | 15.9 | 21.2 |
| Y (low) | .77 | 19.5 | 29.1 | 7.4 | 6.5 | 8.2 |

(49 U.S.C. 1803,1804,1808,49 CFR 1.53).

NOTE.—The Materials Transportation Bureau has determined that this final rule will not result in a major economic impact under the terms of Executive Order 12044 and DOT implementing procedures (43 FR 9582). A regulatiory evaluation is available in the docket.

Issued in Washington, D.C., on February 6, 1979.

L. D. SANTMAN,
*Director, Materials Transportation Bureau.*

[FR Doc. 79-4694 Filed 2-14-19; 8:45 a.m.]

[4310-55-M]

## Title 50—Wildlife and Fisheries

## CHAPTER 1—UNITED STATES FISH AND WILDLIFE SERVICE, DEPARTMENT OF THE INTERIOR

## PART 33—SPORT FISHING

### Opening of Quivira National Wildlife Refuge, Kans., to Sport Fishing

AGENCY: Fish and Wildlife Service, Interior.

ACTION: Special Regulation.

SUMMARY: The Director has determined that the opening to sport fishing of Quivira National Wildlife Refuge is compatible with the objectives for which the area was established, will utilize a renewable natural resource, and will provide additional recreational opportunity to the public.

DATES: May 1, 1979, through September 30, 1979.

FOR FURTHER INFORMATION CONTACT:

Charles R. Darling, Refuge Manager, P.O. Box G, Stafford, Kansas 67578. 316-486-2393.

SUPPLEMENTARY INFORMATION:

§ 33.5 Special regulations; sport fishing; for individual wildlife refuge areas.

Sport fishing is permitted on the Quivira National Wildlife Refuge, Kansas, only on the areas designated by signs as being open to fishing. These areas comprising 990 acres are delineated on maps available at the refuge headquarters and from the office of the Area Manager, U.S. Fish and Wildlife Service, Suite 106, Rockcreek Office Building, 2701 Rockcreek Parkway, North Kansas City, Missouri 64116. Sport fishing shall be in accordance with all applicable State regulations subject to the following conditions:

1. Fishing will be with closely attended rod(s) and line(s) only
2. The use of boats is not permitted. One-man floater tubes may be used.
3. Overnight camping is not permitted.

The provisions of this special regulation supplement the regulations which govern fishing on wildlife refuge areas generally which are set forth in Title 50 Code of Federal Regulations, Part 33. The public is invited to offer suggestions and comments at any time.

The U.S. Fish and Wildlife Service has determined that this document does not contain a major proposal requiring preparation of an Economic Impact Statement under Executive Order 11949 and OMB Circular A-107.

CHARLES R. DARLING,
*Refuge Manager, Quivira National Wildlife Refuge, Stafford, Kansas.*

JANUARY 26, 1979.

[FR Doc. 79-4984 Filed 2-14-79; 8:45 am]

# proposed rules

This section of the FEDERAL REGISTER contains notices to the public of the proposed issuance of rules and regulations. The purpose of these notices is to give interested persons an opportunity to participate in the rule making prior to the adoption of the final rules.

[3410-02-M]

## DEPARTMENT OF AGRICULTURE

Agricultural Marketing Service

[7 CFR Part 1011]

[Docket No. AO-251-A21]

### MILK IN THE TENNESSEE VALLEY MARKETING AREA

Extension of Time for Filing Exceptions to the Recommended Decision on Proposed Amendments to Tentative Marketing Agreement and to Order

AGENCY: Agricultural Marketing Service, USDA.

ACTION: Extension of time for filing exceptions.

SUMMARY: This action extends the time for filing exceptions to the January 18, 1979, recommended decision for the order regulating the handling of milk in the Tennessee Valley marketing area.

DATE: Exceptions are now due on or before March 9, 1979.

ADDRESS: Exceptions (four copies) should be filed with the Hearing Clerk, Room 1077 South Building, U.S. Department of Agriculture, Washington, D.C. 20250.

FOR FURTHER INFORMATION CONTACT:

Richard A. Glandt, Marketing Specialist, Dairy Division, Agricultural Marketing Service, U.S. Department of Agriculture, Washington, D.C. 20250, (202) 447-4829.

SUPPLEMENTARY INFORMATION: Prior documents in this proceeding:

Notice of hearing: Issued August 23, 1978; published August 28, 1978 (43 FR 38412).

Recommended Decision: Issued January 18, 1979; published January 23, 1979 (44 FR 4696).

Notice is hereby given that the time for filing exceptions to the recommended decision with respect to the proposed amendments to the tentative marketing agreement and to the order regulating the handling of milk in the Tennessee Valley marketing area which was issued January 18, 1979 (44 FR 4696) is hereby extended to March 9, 1979.

This notice is issued pursuant to the provisions of the Agricultural Marketing Agreement Act of 1937, as amended (7 U.S.C. 601 *et seq.*), and the applicable rules of practice and procedure governing the formulation of marketing agreements and marketing orders (7 CFR Part 900).

Signed at Washington, D.C., on February 9, 1979.

JAMES E. SPRINGFIELD,
*Acting Deputy Administrator, Marketing Program Operations.*

[FR Doc. 79-4942 Filed 2-14-79; 8:45 am]

---

[6210-01-M]

## FEDERAL RESERVE SYSTEM

[12 CFR Part 226]

[Reg. Z; Docket No. R-0202]

### TRUTH IN LENDING

Right of Rescission

AGENCY: Board of Governors of the Federal Reserve System.

ACTION: Proposed suspension of rule and interpretation.

SUMMARY: The Board is proposing to suspend its recent amendment and interpretation of regulation Z which allow creditors an alternative to providing the right of rescission and notice of that right for each transaction under certain open end accounts secured by consumers' residences. The Board is soliciting comment on whether it should suspend or repeal the amendment and interpretation, on whether the amendment should be modified to provide additional protections to consumers, and on whether creditors that intend to offer open end credit plans under the amendment should be required to notify the Board of that intention and provide the Board with a copy of the initial Truth in Lending disclosures to be made in connection with the plans. The Board is also requesting information about plans currently being offered pursuant to the amendment. This action is being taken because it appears that when the amendment was initially proposed for comment, interested parties may not have been aware of the proposal and, therefore, may not have submitted relevant data, views, comments, or arguments regarding possible risks and benefits to consumers which might result from the amendment.

DATE: Comments must be received on or before April 16, 1979.

ADDRESS: Secretary, Board of Governors of the Federal Reserve System, Washington, D.C. 20551.

FOR FURTHER INFORMATION CONTACT:

Glenn E. Loney, Section Chief, Division of Consumer Affairs, Board of Governors of the Federal Reserve System, Washington, D.C. 20551, (202) 452-3867.

SUPPLEMENTARY INFORMATION: Effective August 3, 1978, (43 FR 34111) the Board amended Regulation Z by creating an alternative to providing the right of rescission and notice of that right for each individual transaction under certain open end accounts secured by consumers' residences. Under the terms of that amendment, § 226.9(g)(6) of Regulation Z, if a creditor provides customers of such accounts with a disclosure of their rights at the time their accounts are opened, prior to any increase in their lines of credit, prior to a change in the terms of their accounts, and at the time a security interest in a customer's residence is added to an existing account, as well as an annual reminder that their homes stand as security for their accounts, the creditor need not provide the right of rescission and notice of that right for individual transactions on the accounts. At the same time, the Board issued Interpretation § 226.904 which provides sample disclosures which creditors may use to meet certain of the amendment's requirements. The interpretation was amended, effective October 31, 1978, (43 FR 50672). For convenient reference, the amendment and interpretation are reproduced below:

§ 226.9 Right to Rescind Certain Transactions.

* * * * *

(g) Exceptions to general rule. * * *

(6) Individual transactions under an open end credit account; *Provided:*

(i) That the creditor and the seller are not the same or related persons.[1a]

(ii) That the creditor provides the disclosure required by § 226.9(b) at the time the disclosures required under § 226.7(a) are required to be made, or, if the security inter-

[1a] For purposes of § 226.9(g)(6) a person is related to a creditor if that person would be deemed related to the creditor under footnote 9b to § 226.7(k).

est is not retained or acquired at the time the § 226.7(a) disclosures are required to be made, at the time the security interest is retained or acquired.

(iii) That the creditor does not change the terms of a customer's account within the meaning of § 226.7(f) or increase the customer's line of credit without affording the customer the opportunity to refuse the change in terms or the increase. If the customer refuses the change in terms, the creditor need not extend any further credit on the account; however, the customer shall have the right to repay any existing obligation on the account under the then existing terms of the account. At the time a disclosure of a change in terms under § 226.7(f) is required to be made or prior to an increase in the customer's line of credit, the creditor shall provide the customer with two copies of a disclosure setting forth, as applicable: The fact that the creditor intends to change the terms or increase the line of credit of the customer's account; the fact that the account is secured by the customer's real property; and the fact that the customer may refuse the change in terms and repay any existing obligation under the then existing terms of the account, or refuse the increase in the line of credit, by giving the creditor written notice within three business days of the date of the disclosure.

(iv) That at least once each calendar year the creditor furnishes to the customer a disclosure of the fact that the customer's account is secured by the customer's real property and that failure to pay any outstanding balance in accordance with the terms of the account could result in the loss of the customer's real property.

(v) That each disclosure provided pursuant hereto is made on one side of a statement separate from any other documents, that the disclosure sets forth the name of the creditor and, in the case of the disclosures required by subparagraph (iii) hereof, the creditor's address, the date on which the disclosure is furnished to the customer, the date by which the customer should give notice of refusal of the increase in the line of credit or the change in terms of the account, and the fact that one copy of the disclosure can be used for that purpose.

### § 226.904 Right of rescission for certain open end credit accounts.

Section 226.9(g)(6) provides an exception to the right of rescission for individual transactions on an open end credit account provided, among other things, that the disclosures required by that section are made at the times specified. The question arises as to what disclosures will satisfy the requirements of §§ 226.9(g)(6)(iii) and (iv).

The disclosures set forth below, if accurate and when properly completed, will satisfy the requirements, as to form and content, of the indicated sections of the regulation. No specific type size or style is required. If the real property on which the security interest may arise does not include a dwelling, the creditor may substitute such words as "the property you are purchasing" for "your home" or "lot" for "home" where these words appear in the disclosures.

Section 226.9(g)(6)(iii) (Increase in line of credit).

NOTICE TO CUSTOMER REQUIRED BY FEDERAL LAW

(Name of creditor) ———— HAS APPROVED AN INCREASE IN THE AMOUNT OF CREDIT AVAILABLE TO YOU ON YOUR OPEN END ACCOUNT SECURED BY YOUR HOME. ANY ADDITIONAL CREDIT YOU USE WILL ALSO BE SECURED BY YOUR HOME. YOU HAVE A RIGHT TO REFUSE TO ACCEPT THIS INCREASE. YOU MAY EXERCISE THIS RIGHT WITHIN THREE BUSINESS DAYS FROM (date disclosure delivered to customer) ———— BY NOTIFYING US AT (Address of creditor's place of business) ———— BY MAIL OR TELEGRAM SENT NOT LATER THAN MIDNIGHT OF (date) ————

YOU MAY ALSO USE ANY OTHER FORM OF WRITTEN NOTICE TO REFUSE THE INCREASE IF IT IS DELIVERED TO THE ABOVE ADDRESS NOT LATER THAN THAT TIME. THIS NOTICE MAY BE USED FOR THAT PURPOSE BY DATING AND SIGNING BELOW.

I HEREBY REFUSE THE INCREASE IN THE CREDIT AVAILABLE ON MY ACCOUNT.

———————— (date).

————————
(customer's signature)

Section 226.9(g)(6)(iii) (Change in terms)

NOTICE TO CUSTOMER REQUIRED BY FEDERAL LAW

(Name of creditor) ———— INTENDS TO CHANGE THE TERMS OF YOUR OPEN END CREDIT ACCOUNT WHICH IS SECURED BY YOUR HOME. YOU HAVE A RIGHT TO REFUSE TO ACCEPT THIS CHANGE IN TERMS. IF YOU REFUSE THIS CHANGE IN TERMS, YOU HAVE THE RIGHT TO CONTINUE TO REPAY YOUR EXISTING OBLIGATION UNDER THE PRESENT TERMS OF THE ACCOUNT. HOWEVER, WE WOULD THEN HAVE THE RIGHT TO REFUSE TO EXTEND ANY FURTHER CREDIT, EXCEPT PURSUANT TO THESE NEW TERMS. YOU MAY EXERCISE YOUR RIGHT TO REFUSE THE CHANGE IN TERMS WITHIN THREE BUSINESS DAYS OF ———— (date disclosure delivered to customer) ———— BY NOTIFYING US AT (Address of creditor's place of business) ———— BY MAIL OR TELEGRAM SENT NOT LATER THAN MIDNIGHT OF (date) ————. YOU MAY ALSO USE ANY OTHER FORM OF WRITTEN NOTICE TO REFUSE THE CHANGE IN TERMS IF IT IS DELIVERED TO THE ABOVE ADDRESS NOT LATER THAN THAT TIME. THIS NOTICE MAY BE USED FOR THAT PURPOSE BY DATING AND SIGNING BELOW.

I HEREBY REFUST THE CHANGE IN THE TERMS OF MY ACCOUNT.

————————
———————— (date)

————————
(customer's signature)

Section 226.9(g)(6)(iv) (Annual disclosure)

NOTICE TO CUSTOMER REQUIRED BY FEDERAL LAW

THIS IS TO REMIND YOU THAT YOUR OPEN END CREDIT ACCOUNT WITH ———— (Name of creditor) IS SECURED BY A LIEN, MORTGAGE, OR OTHER SECURITY INTEREST ON YOUR HOME. THIS MEANS THAT YOUR FAILURE TO PAY ANY OUTSTANDING BALANCE IN ACCORDANCE WITH THE TERMS OF THE ACCOUNT COULD RESULT IN THE LOSS OF YOUR HOME.

It appears that when the amendment was first proposed for public comment in December 1977, interested parties may not have been aware of the proposal and, consequently, may not have submitted to the Board relevant data, views, comments, or arguments regarding possible risks and benefits to consumers which may result from the amendment. Therefore, the Board believes that it may be advisable to suspend the amendment and interpretation for additional study and public comment.

In addition to comment on the question of whether or not to suspend the amendment, the Board also desires to receive comments on the amendment and interpretation themselves. The Board is interested in comment on whether the amendment and interpretation should be repealed or whether there are additional protections or limitations which could be included in the amendment and/or interpretation which would reduce any perceived risk to consumers presented by open end plans secured by consumers' homes. Examples of possible protections or limitations are maximum or minimum credit limits which could be offered in connection with such plans, limitations on the purposes for which the plans could be used, and maximum or minimum limits on the amount of individual extensions of credit under the plans. The Board is also interested in receiving comment from creditors and customers of open end plans presently being offered under the amendment regarding such things as the terms of the plans, the purposes for which they are being used, and the degree of customer satisfaction or dissatisfaction with the plans.

The Board also desires to receive comment on a proposal to impose, as a condition to offering open end credit plans pursuant to the amendment, a requirement that creditors notify the Board of their intention to offer such plans and furnish the Board with a copy of the initial Truth in Lending disclosures required to be made pursuant to § 226.7(a) of Regulation Z in connection with the plans. By imposing such a requirement, the Board would ascertain the number and identity of creditors offering such plans as well as the underlying terms of the plans. After obtaining this information, the Board would periodically make inquiries of the creditors to determine whether the plans were affecting consumers adversely by, for example, resulting in increases in delin-

quency, default, or foreclosure. The Board would also make relevant inquiries to determine benefits of the plans when compared to closed end credit transactions secured by consumers' residences.

Therefore, pursuant to the authority granted in 15 U.S.C. 1604 (1976), the Board:

(1) Proposes to suspend § 226.9(g)(6) and Interpretation § 226.904 of Regulation Z, 12 CFR Part 226, for further study and public comment;

(2) Solicits comment on the proposed suspension and on whether § 226.9(g)(6) and § 226.904 should be modified or repealed;

(3) Requests information regarding plans currently being offered pursuant to § 226.9(g)(6) and § 226.904;

(4) Proposes to add a new subsection (vi) to § 226.9(g)(6) of Regulation Z, 12 CFR Part 226, as follows:

§ 226.9 Right to rescind certain transactions.

* * * * *

(g) Exceptions to general rule.* * *

(6) Individual transactions under an open end credit account: *Provided:* * * *

(vi) That prior to opening such an account or within 90 days of the effective date of this subparagraph (vi), whichever is later, the creditor notifies the Secretary, Board of Governors of the Federal Reserve System, Washington, D.C. 20551, in writing of the creditor's intention to offer such accounts, and provides the Secretary with a copy of the disclosures required to be made pursuant to § 226.7(a) in connection with such accounts.

To aid in the consideration of these matters by the Board, interested persons are invited to submit relevant data, views, comments, or arguments. Any such material should be submitted in writing to the Secretary, Board of Governors of the Federal Reserve System, Washington, D.C. 20551, to be received no later than April 16, 1979, and should include the docket number R-0202. The material submitted will be made available for public inspection and copying, except as provided in § 261.6(a) of the Board's Rules Regarding Availability of Information (12 CFR 261.6(a)).

By order of the Board of Governors, February 7, 1979.

GRIFFITH L. GARWOOD,
*Deputy Secretary of the Board.*

[FR Doc. 79-4956 Filed 2-14-79; 8:45 am]

---

[4910-13-M]

## DEPARTMENT OF TRANSPORTATION

### Federal Aviation Administration

[14 CFR Part 39]

[Docket No. 18722]

### AIRWORTHINESS DIRECTIVES

### Fokker F-27 Airplanes

AGENCY: Federal Aviation Administration (FAA), DOT.

ACTION: Notice of proposed rulemaking.

SUMMARY: This notice proposes to adopt an airworthiness directive (AD) that would require the replacement of unshielded electrical wire in the propeller auto-feathering circuit with shielded wire and segregation of some wires on certain plugs and receptacles in the feathering circuit on Fokker F-27 airplanes. The proposed AD is needed to remove an incorrect type of wire from the propeller control circuit which could permit that circuit to become inadvertently energized and result in an unwanted auto-feathering of the propeller during flight, adversely affecting control of the airplane.

DATES: Comments must be received on or before April 12, 1979.

ADDRESSES: Send comments on the proposal in duplicate to:

Federal Aviation Administration, Office of the Chief Counsel, Attn: Rules Docket (AGC-24) Docket No. 18722, 800 Independence Avenue, S.W., Washington, D.C. 20591.

The applicable service bulletin may be obtained from:

FOKKER-VFW, Technical Publications Dept., P.O. Box 7600, Schiphol—Oost, The Netherlands.

A copy of the service bulletin is contained in the Rules Docket, Rm 916, 800 Independence Avenue, S.W., Washington, D.C. 20591.

FOR FURTHER INFORMATION CONTACT:

Don C. Jacobsen, Chief, Aircraft Certification Staff, AEU-100, Europe, Africa and Middle East Region, Federal Aviation Administration, c/o American Embassy, Brussels, Belgium, Telephone 513.38.30., or Chris Christie, Federal Aviation Administration, Engineering and Manufacturing Division, AFS-110, 800 Independence Avenue, S.W., Washington, D.C. 20591 (202) 426-8374.

SUPPLEMENTARY INFORMATION: Interested persons are invited to participate in the making of the proposed rule by submitting such written data, views, or arguments as they may desire. Communications should identify the regulatory docket number and be submitted in duplicate to the address specified above. All communications received on or before the closing date for comments, will be considered by the Administrator before taking action on the proposed rule. The proposals contained in this notice may be changed in the light of comments received. All comments will be available, both before and after the closing date for comments in the Rules Docket for examination by interested persons. A report summarizing each FAA-public contact concerned with the substance of the proposed AD, will be filed in the Rules Docket.

The FAA has determined that on certain serial number Fokker F-27 airplanes the propeller auto-feathering system wire between the firewall and the cockpit pedestal became unintentionally unshielded thereby reducing its protection against inadvertent or unwanted feathering which could occur in any regime of airplane operation and adversely affect control of the airplane. Since this condition is likely to exist or develop on other airplanes of the same type design, the proposed AD would require replacement of unshielded wire found in the propeller auto-feathering system between the firewall and the pedestal with shielded wire, re-routing certain wires, and rework of certain electrical receptacles as installed in the propeller auto-feathering system of certain Fokker F-27 airplanes.

### THE PROPOSED AMENDMENT

Accordingly, the Federal Aviation Administration proposes to amend § 39.13 of Part 39 of the Federal Aviation Regulations (14 CFR 39.13) by adding the following new airworthiness directive:

FOKKER—VFW b.v. Applies to F-27 series airplanes, serial numbers 10105 through 10248 which have incorporated Fokker Service Bulletin F27/61-9(G6), 10249 through 10507 which have not incorporated Fokker Service Bulletin F27/61-10(G7), and 10508 through 10553, certificated in all categories.

Compliance is required as indicated, unless already accomplished.

To prevent propeller auto-feathering caused by inadvertent potential being introduced into the propeller auto-feathering circuit, accomplish the following:

(a) Within the next 500 hours time in service after the effective date of this AD, for airplane serial numbers 10105 through 10248 if Fokker Service Bulletin F27/61-9(G6) has been incorporated, and for airplane serial numbers 10249 through 10507 if Fokker Service Bulletin F27/61-10(G7) has not been incorporated, rework the cockpit floor and wiring on receptacles, replace, route and connect the wiring, and finish shielding in accordance with paragraph 2, "Accomplishment Instructions", Part I of Fokker Service Bulletin F27/61-29, dated October 17, 1977, or an FAA-approved equivalent.

NOTE.—Paragraph 2, Part I, Steps B, C, and D are not applicable for airplane serial numbers 10105 through 10248 if Fokker Service Bulletin F27/61-9(G6) has been incorporated.

(b) Within the next 500 hours time in service after the effective date of this AD, for airplane serial numbers 10508 through 10553, rework the cockpit floor and wiring on receptacles, replace, route and connect the wiring, and finish shielding in accordance with paragraph 2, "Accomplishment Instructions", Part II of Fokker Service Bulletin F27/61-29, dated October 17, 1977, or an FAA-approved equivalent.

(c) For purposes of this AD, an FAA-approved equivalent must be approved by the Chief, Aircraft Certification Staff, FAA, Europe, Africa, and Middle East Region, c/o American Embassy, Brussels, Belgium, and the request must be submitted through an FAA Maintenance Inspector and contain substantiating data to justify a method of compliance for that operator.

(Secs. 313(a), 601, 603, Federal Aviation Act of 1958, as amended, (49 U.S.C. 1354(a), 1421, 1423); sec. 6(c), Department of Transportation Act (49 U.S.C. 1655(c); 14 CFR 11.85.)

NOTE.—The FAA has determined that this document involves a proposed regulation which is not considered to be significant under the procedures and criteria prescribed by Executive Order 12044 and as implemented by interim Department of Transportation guidelines (43 FR 9582; March 8, 1978).

Issued in Washington, D.C., on January 31, 1979.

JAMES M. VINES,
*Acting Director,*
*Flight Standards Service.*

[FR Doc. 79-4679 Filed 2-14-79; 8:45 am]

---

[4910-13-13]

[14 CFR Part 39]

[Docket No. 18723]

## AIRWORTHINESS DIRECTIVES

### Fokker Model F-27, Mks 100, 200, 300, 400, 500, 600, 700 Airplanes

AGENCY: Federal Aviation Administration (FAA), DOT.

ACTION: Notice of proposed rulemaking.

SUMMARY: This notice proposes to adopt an Airworthiness Directive (AD) that would require a one-time inspection of the nose wheel axles installed on Fokker Model F-27 airplanes including axles held as spares or installed in certain spare nose landing gears to detect incorrect machining of the bore, rework or removal from service of those axles found to be improperly machined, and application of an identifying mark on those found to be properly machined. This AD is needed to prevent development of fatigue failure of improperly machined axles which could result in an accident upon landing or during ground operation of the airplane.

DATES: Comments must be received on or before April 12, 1979.

ADDRESSES: Send comments on the proposal in duplicate to: Federal Aviation Administration, Office of the Chief Counsel, Attn: Rules Docket (AGC-24) Docket No. 18723, 800 Independence Avenue, S.W., Washington, D.C. 20591.

The applicable service bulletins may be obtained from:

Dowty Rotol Ltd., Staverton West, Sully Road, Sterling, Va. 22170.

Dowty Rotol Ltd., Cheltenham Road, Gloucester, England GL29QH.

Fokker-VFW b.v., P.O. Box 7600, Schiphol Cost, The Netherlands.

A copy of the service bulletin is contained in the Rules Docket, Rm 916, 800 Independence Avenue, S.W., Washington, D.C. 20591.

FOR FURTHER INFORMATION CONTACT:

D. C. Jacobsen, Aircraft Certification Staff, AEU-100, Europe, Africa and Middle East Region, Federal Aviation Administration, c/o American Embassy, Brussels, Belgium, Telephone 513.38.30, or Chris Christie, FAA Eng. & Mfg Div., AFS-110, 800 Independence Ave. S.W., Washington, D.C. 20591 (202) 426-8374.

SUPPLEMENTARY INFORMATION: Interested persons are invited to participate in the making of the proposed rule by submitting such written data, views, or arguments as they may desire. Communications should identify the regulatory docket number and be submitted in duplicate to the address specified above. All communications received on or before the closing date for comments will be considered by the Administrator before taking action upon the proposed rule. The proposals contained in this notice may be changed in the light of comments received. All comments will be available, both before and after the closing date for comments, in the Rules Docket for examination by interested persons. A report summarizing each FAA-public contact, concerned with the substance of the proposed AD, will be filed in the Rules Docket.

There have been reports of improper machining of the bore of the Dowty Rotol nose wheel axle installed on certain Fokker Model F-27 airplanes that could result in axle failure and cause an accident while operating the airplane on the ground.

Since this condition is likely to exist on other airplanes of the same type design, the proposed AD would require a one-time inspection of the bore to determine proper machining of nose wheel axles, Dowty Rotol P/N 9009Y12, installed on certain Fokker Model F-27 airplanes and certain spare nose landing gears, and all axles of the same part number held as spares, removal from service of those nose wheel axles found to be improperly machined, and unique marking of all axles determined to have a properly machined bore.

### THE PROPOSED AMENDMENT

Accordingly, the Federal Aviation Administration proposes to amend § 39.13 of Part 30 of the Federal Aviation Regulations (14 CFR 39.13) by adding the following new airworthiness directive:

FOKKER-VFW. Applies to Model F-27 Mark 100, 200, 300, 400, 500, 600, 700 airplanes, certificated in all categories, all serial numbers up to and including 10569 which have Dowty Rotol nose landing gears other than type 200565001, 200568001, and 200678001 installed, except serial numbers 10549, 10561, 10562, and 10563.

Compliance is required as indicated, unless already accomplished.

To prevent fatigue failure of improperly machined nose wheel axles, accomplish the following:

(a) Within the next 500 hours time in service after the effective date of this AD or at the next nose wheel change, whichever occurs first, inspect the bore of the nose wheel axle (Dowty Rotol P/N 9009Y12) in accordance with Section 2, "Accomplishment Instructions", of Fokker Service Bulletin No. F27/32-129 dated May 1, 1978, and Section 2, "Accomplishment Instructions" of Dowty Rotol Service Bulletin No. 32-100B, dated April 25, 1978 or Dowty Rotol Service Bulletin No. 32-30S, dated April 25, 1978, as appropriate, (hereinafter referred to as the Dowty Rotol Service Bulletin) or an FAA-approved equivalent and—

(1) If no undercut is found and the change in section from the central bore to the threaded bore is a 0.25 inch maximum radius or a 20° tapered chamfer, identify the axle in accordance with item 2.B.(1) of the Dowty Rotol Service Bulletin, or an FAA-approved equivalent and return the axle to service.

(2) If an undercut is found and both ends have a smooth transition to the adjacent area and provided the axle wall thickness is 0.115 inches or more, identify the axles in accordance with paragraph item 2.B.(1) of the Dowty Rotol Service Bulletin or an FAA-approved equivalent and return the axle to service.

(3) If an undercut is found and the axle wall thickness is less than 0.115 inches, or if either or both ends of the undercut do not have a smooth transition to the adjacent area, remove the axle from service and replace with an axle which is identified in accordance with paragraph (a)(1) or (a)(2) of this AD.

(b) Before release to service, inspect and identify or remove from service, in accordance with paragraph (a) of this AD, all nose wheel axles (Dowty Rotol P/N 9009Y12) held as spares and delivered prior to February 2, 1978.

(c) Before releasing to service any spare nose wheel landing gears delivered prior to February 2, 1978, inspect and identify or

remove from service and replace in accordance with paragraph (a) of this AD all nose wheel axles (Dowty Rotol P/N 9009Y12) installed in these spare nose wheel landing gears.

NOTE: Dowty Rotol Service Bulletin 32-30S is identical to Dowty Rotol Service Bulletin No. 32-100B but applies only to Fokker Model F-27 Mk 500.

(Secs. 313(a), 601, 603, Federal Aviation Act of 1968, as amended; (49 U.S.C. 1354(a), 1421, 1423); sec. 6(c), Department of Transportation Act (49 U.S.C. 1655(c); 14 CFR 11.85)

NOTE.—The FAA has determined that this document involves a proposed regulation which is not considered to be significant under the procedures and criteria prescribed by Executive Order 12044 and as implemented by interim Department of Transportation guidelines (43 FR 9582; March 8, 1978).

Issued in Washington, D.C., on February 5, 1979.

J. A. FERRARESE,
*Acting Director,*
*Flight Standards Service.*

[FR Doc. 79-4683 Filed 2-14-79; 8:45 am]

---

[4910-13-M]

[14 CFR Part 71]

[Airspace Docket No. 79-RM-02]

## TRANSITION AREAS

### Proposed Establishment

AGENCY: Federal Aviation Administration (FAA), DOT.

ACTION: Notice of Proposed Rulemaking.

SUMMARY: This notice of proposed rulemaking (NPRM) proposes to establish a 700' and 1,200' transition area at Britton, South Dakota to provide controlled airspace for aircraft executing the new NDB standard instrument approach procedure developed for the Britton Municipal Airport, Britton, South Dakota.

DATES: Comments must be received on or before February 28, 1979.

ADDRESSES: Send comments on the proposal to: Chief, Air Traffic Division, Attn: ARM-500, Federal Aviation Administration, 10455 East 25th Avenue, Aurora, Colorado 80010.

A public docket will be available for examination by interested persons in the office of Regional Counsel, Federal Aviation Administration, 10455 East 25th Avenue, Aurora, Colorado 80010.

FOR FURTHER INFORMATION CONTACT:

Pruett B. Helm, Airspace and Procedures Specialist, Operations, Procedures and Airspace Branch (ARM-530), Air Traffic Division, Federal Aviation Administration, Rocky Mountain Region, 10455 East 25th Avenue, Aurora, Colorado 80010, telephone (303) 837-3937.

SUPPLEMENTARY INFORMATION:

### COMMENTS INVITED

Interested persons may participate in the proposed rulemaking by submitting such written data, views, or arguments as they may desire. Communications should be submitted in triplicate to the Chief, Air Traffic Division, Federal Aviation Administration, 10455 East 25th Avenue, Aurora, Colorado 80010. All communications received will be considered before action is taken on the proposed amendment. No public hearing is contemplated at this time, but arrangements for informal conferences with Federal Aviation Administration officials may be made by contacting the Regional Air Traffic Division Chief. Any data, views, or arguments presented during such conferences must also be submitted in writing in accordance with this notice in order to become part of the record for consideration. The proposal contained in this notice may be changed in the light of comments recieved.

### AVAILABILITY OF NPRM

Any person may obtain a copy of this Notice of Proposed Rulemaking (NPRM) by submitting a request to the Federal Aviation Administration, Office of Public Affairs, Attention: Public Information Center, APA-430, 800 Independence Avenue, S.W., Washington, D.C. 20591, or by calling (202) 426-8058. Communications must identify the notice number of this NPRM. Persons interested in being placed on a mailing list for future NPRM's should also request a copy of Advisory Circular No. 11-2 which describes the application procedure.

### THE PROPOSAL

The Federal Aviation Administration (FAA) is considering an amendment to Subpart G of Part 71 of the Federal Aviation Regulations (14 CFR Part 71) to establish 700' and 1,200' transition areas at Britton, South Dakota. This proposal is necessary to provide controlled airspace for aircraft executing the new NDB standard instrument approach procedure developed for the Britton Municipal Airport, Britton, South Dakota. It is proposed to make the establishment of the transition areas coincident with the effective date of the new standard instrument approach. Accordingly, the Federal Aviation Administration proposes to amend Subpart G of Part 71 of the Federal Aviation Regulations (14 CFR Part 71) as follows:

By amending § 71.181 so as to establish the following transition areas to read:

BRITTON, S. DAK.

That airspace extending upward from 700' above the surface within a 6.5 mile radius of the Britton Municipal Airport (latitude 45°48'57" N., longitude 97°44'37" W.) and within 3 miles each side of the 321° bearing from the Britton NDB (latitude 45°48'50.4" N., longitude 97°44'36.8" W.) extending from the 6.5 mile radius to 8.5 miles northwest of the Britton NDB, and that airspace extending upward from 1,200' above the surface bounded on the west by longitude 98°30'00" W., on the north by latitude 46°30'00" N., on the east by longitude 97°00'00", and on the south by latitude 44°30'00" N., excluding the Gwinner, North Dakota, Fargo, North Dakota, Watertown, South Dakota, Huron, South Dakota, Aberdeen, South Dakota 1,200' transition areas and all Federal airways.

### DRAFTING INFORMATION

The principal authors of this document are Pruett B. Helm, Air Traffic Division, and Daniel J. Peterson, office of the Regional Counsel, Rocky Mountain Region.

This amendment is proposed under authority of section 307(a) of the Federal Aviation Act of 1958, as amended, (49 U.S.C. 1348(a)), and of section 6(c) of the Department of Transportation Act (49 U.S.C. 1655(c)).

NOTE: The Federal Aviation Administration has determined that this document does not contain a major proposal requiring preparation of an Economic Impact Statement under Executive Order 11821 and OMB Circular A-107.

Issued in Aurora, Colo., on January 31, 1979.

M. M. MARTIN,
*Director,*
*Rocky Mountain Region.*

[FR Doc. 79-4682 Filed 2-14-79; 8:45 am]

---

[4910-13-M]

[14 CFR Part 71]

[Airspace Docket No. 78-EA-120]

## CONTROL ZONE AND TRANSITION AREA, CALVERTON, N.Y.

### Proposed Alteration

AGENCY: Federal Aviation Administration (FAA), DOT.

ACTION: Notice of Proposed Rule Making.

SUMMARY: This notice proposes to alter the Calverton, N.Y., Control Zone & Transition Area, over Peconic River Plant (Grumman) Airport, Calverton, N.Y. A new VOR RWY 5 instrument approach procedure has been developed for the airport. This alteration will provide protection to aircraft executing the new instrument approach by increasing the controlled

airspace. An instrument approach procedure requires the designation of controlled airspace to protect instrument aircraft utilizing the instrument approach. The airport geographical coordinates have also been revised.

DATES: Comments must be received on or before April 12, 1979.

ADDRESSES: Send comments on the proposal in triplicate to: Chief, Airspace & Procedures Branch, AEA-530, Eastern Region, Federal Aviation Administration, Federal Building, Jamaica, New York 11430. The docket may be examined at the following location: FAA, Office of Regional Counsel, AEA-7, Federal Building, J.F.K. International Airport, Jamaica, New York 11430.

FOR FURTHER INFORMATION CONTACT:

Charles J. Bell, Airspace & Procedures Branch, AEA-530, Air Traffic Division, Federal Aviation Administration, Federal Building, J.F.K. International Airport, Jamaica, New York 11430, Telephone (212) 995-3391.

COMMENTS INVITED

Interested parties may participate in the proposed rulemaking by submitting such written data, views or arguments as they may desire. Communications should identify the airspace docket number and be submitted in triplicate to the Director, Eastern Region, Attention: Chief, Air Traffic Division, Federal Aviation Administration, Federal Building, J.F.K. International Airport, Jamaica, New York 11430. All communications received on or before April 12, 1979, will be considered before action is taken on the proposed amendment. The proposals contained in this notice may be changed in the light of comments received. All comments submitted will be available, both before and after the closing date for comments, in the Rules Docket for examination by interested persons.

AVAILABILITY OF NPRM

Any person may obtain a copy of this notice of proposed rulemaking (NPRM) by submitting a request to the Chief, Airspace & Procedures Branch, AEA-530, Eastern Region, Federal Aviation Administration, Federal Building, Jamaica, New York 11430, or by calling (212) 995-3391.

Communications must identify the docket number of this NPRM. Persons interested in being placed on a mailing list for future NPRMs should also request a copy of Advisory Circular No. 11-2 which describes the application procedures.

THE PROPOSAL

The FAA is considering an amendment to Subparts F and G of Part 71 of the Federal Aviation Regulations (14 CFR Part 71) to alter the control zone and transition area over Peconic River Plant (Grumman) Airport. The alteration will add a control zone extension to the southwest of about 3.5 miles and a width of six miles. The alteration to the transition area will note the new coordinates.

THE PROPOSED AMENDMENT

Accordingly, pursuant to the authority delegated to me, the Federal Aviation Administration proposes to amend Sections 71.171 and 71.181 of Part 71 of the Federal Aviation Regulations (14 CFR Part 71) as follows:

1. Amend Section 71.171 of Part 71 of the Federal Aviation Regulations by deleting the description of the Calverton, N.Y. control zone and by inserting the following in lieu thereof:

"Within a 5-mile radius of the center, 40°54'55"N., 72°47'43"W., of Peconic River Plant (Grumman) Airport, Calverton, N.Y.; within 3 miles each side of the Calverton, N.Y. VORTAC 210° radial, extending from the 5-mile radius zone to 8.5 miles southwest of the VORTAC. This control zone is effective from 0800 to 1630 hours, local time, Monday through Friday."

2. Amend Section 71.181 of Part 71 of the Federal Aviation Regulations by deleting the description of the Calverton, N.Y. 700-foot floor transition area and by inserting the following in lieu thereof:

"That airspace extending upward from 700 feet above the surface within an 8.5-mile radius of the center, 40°54'55"N., 72°47'43"W., of Peconic River Plant (Grumman) Airport, Calverton, N.Y."

Section 307(a) of the Federal Aviation Act of 1958 (72 Stat. 749; 49 U.S.C. 1348(a)) and of Section 6(c) of the Department of Transportation Act (49 U.S.C. 1655(c)); and 14 CFR 11.65.

NOTE.—The FAA has determined that this document involves a proposed regulation which is not considered to be significant under the procedures and criteria prescribed by Executive Order 12044 and as implemented by interim Department of Transportation guidelines (43 FR 9582; March 8, 1978).

Issued in Jamaica, New York, on January 31, 1979.

LOUIS J. CARDINALI,
*Acting Director, Eastern Region.*

[FR Doc. 79-4802 Filed 2-14-79; 8:45 am]

---

[4910-13-M]

[14 CFR Part 71]

[Airspace Docket No. 78-EA-119]

## TRANSITION AREA: NEWBURGH, N.Y.

### Proposed Alteration

AGENCY: Federal Aviation Administration (FAA), DOT.

ACTION: Notice of proposed rulemaking.

SUMMARY: This notice proposes to alter the Newburgh, N.Y., Transition Area. A new NDB RWY 3 instrument approach procedure has been developed for Orange County Airport, and a new NDB RWY 26 approach for Randall Airport. This alteration will provide protection to aircraft executing the new and revised instrument approaches by increasing the controlled airspace. An instrument approach procedure requires the designation of controlled airspace to protect instrument aircraft utilizing the instrument approach.

DATES: Comments must be received on or before April 12, 1979.

ADDRESSES: Send comments on the proposal in triplicate to: Chief, Airspace & Procedures Branch, AEA-530, Eastern Region, Federal Aviation Administration, Federal Building, Jamaica, New York 11430. The docket may be examined at the following location: FAA, Office of Regional Counsel, AEA-7, Federal Building, J.F.K. International Airport, Jamaica, New York 11430.

FOR FURTHER INFORMATION CONTACT:

Charles J. Bell, Airspace & Procedures Branch, AEA-530, Air Traffic Division, Federal Aviation Administration, Federal Building, J.F.K, International Airport, Jamaica, New York 11430, Telephone (212) 995-3391.

COMMENTS INVITED

Interested parties may participate in the proposed rulemaking by submitting such written data, views or arguments as they may desire. Communications should identify the airspace docket number and be submitted in triplicate to the Director, Eastern Region, Attention: Chief, Air Traffic Division, Federal Aviation Administration, Federal Building, J.F.K. International airport, Jamaica, New York 11430. All communications received on or before April 12, 1979, will be considered before action is taken on the proposed amendment. The proposals contained in this notice may be changed in the light of comments received. All comments submitted will be available, both before and after the closing date

for comments, in the Rules Docket for examination by interested persons.

AVAILABILITY OF NPRM

Any person may obtain a copy of this notice of proposed rulemaking (NPRM) by submitting a request to the Chief, Airspace & Procedures Branch, AEA-530, Eastern Region, Federal Aviation Administration, Federal Building, Jamaica, New York 11430, or by calling (212) 995-3391.

Communications must identify the docket number of this NPRM. Persons interested in being placed on a mailing list for future NPRMs should also request a copy of Advisory Circular No. 11-2 which describes the application procedures.

THE PROPOSAL

The FAA is considering an amendment to Subpart G of Part 71 of the Federal Aviation Regulations (14 CFR Part 71) to alter the Newburgh, N.Y., transition area. The alteration would add one mile each side of the present transition area as follows; the addition on the west side of the extension will be approximately two miles in length while the addition on the east will be about 5 miles in length. Another addition about two square miles in size would be added in the area located about seven miles southeast of the OTIMS LOM. The alteration will also reduce the lenght of the present extension by three and one half miles.

THE PROPOSED AMENDMENT

Accordingly, pursuant to the authority delegated to me, the Federal Aviation Administration proposes to amend Section 71.181 of Part 71 of the Federal Aviation Regulations (14 CFR Part 71) as follows:

1. Amend Section 71.181 of Part 71 of the Federal Aviation Regulations so as to amend the description of the Newburgh, N.Y. 700-foot floor transition area as follows:

a. Delete, "within 3.5 miles each side of the Orange County Airport ILS localizer south course, extending from the OM to a point 14 miles south of the OM" and insert the following in lieu thereof, "within 4.5 miles each side of the Orange County Airport ILS localizer south course, extending from the OTIMS LOM (41°26'42"N., 74°17'33"W.) to 10.5 miles south of the LOM."

b. Following, "extending from the Huguenot VORTAC to 10 miles east of the Huguenot VORTAC", insert, "within 8 miles south and 3.5 miles north of a 081° bearing from the OTIMS LOM, extending from the LOM to 11.5 miles east of the LOM."

Section 307(a) of the Federal Aviation Act of 1958 (72 Stat. 749; 49 U.S.C. 1348(a)) and of Section 6(c) of the Department of Transportation Act (49 U.S.C. 1655(c)); and 14 CFR 11.65.

NOTE.—The FAA has determined that this document involves a proposed regulation which is not considered to be significant under the procedures and criteria prescribed by Executive Order 12044 and as implemented by interim Department of Transportation guidelines (43 FR 9582; March 8, 1978).

Issued in Jamaica, New York, on January 31, 1979.

LOUIS J. CARDINALI,
*Acting Director, Eastern Region.*

[FR Doc. 79-4804 Filed 2-14-79; 8:45 am]

---

[4910-13-M]

[14 CFR Part 71]

[Airspace Docket No. 78-EA-115]

## TRANSITION AREA: MONTICELLO, N.Y.

### Proposed Alteration

AGENCY: Federal Aviation Administration (FAA), DOT.

ACTION: Notice of proposed rulemaking.

SUMMARY: This notice proposes to alter the Monticello, N.Y., Transition Area, over Sullivan County International Airport, Monticello, N.Y. A new VOR/DME RWY 33 approach procedure has been developed for the airport. This alteration will also change the VOR RWY 1 approach procedure course for Monticello Airport, Monticello, N.Y., by one degree as well as provide protection to aircraft executing the new instrument approach by increasing the controlled airspace. An instrument approach procedure requires the designation of controlled airspace to protect instrument aircraft utilizing the instrument approach.

DATES: Comments must be received on or before April 12, 1979.

ADDRESSES: Send comments on the proposal in triplicate to: Chief, Airspace & Procedures Branch, AEA-530, Eastern Region, Federal Aviation Administration, Federal Building, Jamaica, New York 11430. The docket may be examined at the following location: FAA, Office of Regional Counsel, AEA-7, Federal Building, J.F.K. International Airport, Jamaica, New York 11430.

FOR FURTHER INFORMATION CONTACT:

Charles J. Bell, Airspace & Procedures Branch, AEA-530, Air Traffic Division, Federal Aviation Administration, Federal Building, J.F.K. International Airport, Jamaica, New York 11430, Telephone (212) 995-3391.

COMMENTS INVITED

Interested parties may participate in the proposed rulemaking by submitting such written data, views or arguments as they may desire. Communications should identify the airspace docket number and be submitted in triplicate to the Director, Eastern Region, Attention: Chief, Air Traffic Division, Federal Aviation Administration, Federal Building, J.F.K. International Airport, Jamaica, New York 11430. All communications received on or before April 12, 1979, will be considered before action is taken on the proposed amendment. The proposals contained in this notice may be changed in the light of comments received. All comments submitted will be available, both before and after the closing date for comments, in the Rules Docket for examination by interested persons.

AVAILABILITY OF NPRM

Any person may obtain a copy of this notice of proposed rulemaking (NPRM) by submitting a request to the Chief, Airspace & Procedures Branch, AEA-530, Eastern Region, Federal Aviation Administration, Federal Building, Jamaica, New York 11430, or by calling (212) 995-3391.

Communications must identify the docket number of this NPRM. Persons interested in being placed on a mailing list for future NPRMs should also request a copy of Advisory Circular No. 11-2 which describes the application procedures.

THE PROPOSAL

The FAA is considering an amendment to Subpart G of Part 71 of the Federal Aviation Regulations (14 CFR Part 71) to alter the transition area over Sullivan County International Airport. The alteration will increase the size of the present transition area to the southeast by approximately three miles in length and eight miles in width.

THE PROPOSED AMENDMENT

Accordingly, pursuant to the authority delegated to me, the Federal Aviation Administration proposes to amend Section 71.181 of Part 71 of the Federal Aviation Regulations (14 CFR Part 71) as follows:

1. Amend § 71.181 of Part 71 of the Federal Aviation Regulations so as to amend the description of the Monticello, N.Y. 700-foot floor transition area as follows:

a. Following, "(41°45'59"N., 74°51'39"W.);" insert, "within 4.5 miles each side of the Huguenot, N.Y., VORTAC 333° radial, extending from 5.5 miles northwest of the VORTAC to 22.5 miles northwest of the VORTAC;"

b. Delete, "338° radial extending from the 5-mile radius area to 9 miles north of the VORTAC." and insert the following in lieu thereof, "337° radial, extending from the 5-mile radius area to 9 miles northwest of the VORTAC."

Section 307(a) of the Federal Aviation Act of 1958 (72 Stat. 749; 49 U.S.C. 1348a) and of Section 6(c) of the Department of Transportation Act (49 U.S.C. 1655(c)); and 14 CFR 11.65.

NOTE.—The FAA has determined that this document involves a proposed regulation which is not considered to be significant under the procedures and criteria prescribed by Executive Order 12044 and as implemented by interim Department of Transportation guidelines (43 FR 9582; March 8, 1978).

Issued in Jamaica, New York, on February 2, 1979.

L. J. CARDINALI,
*Acting Director, Eastern Region.*

[FR Doc. 79-4805 Filed 2-14-79; 8:45 am]

---

[4910-13-M]

[14 CFR Part 71]

[Airspace Docket No. 79-EA-1]

## TRANSITION AREA: SPRING VALLEY, N.Y.

### Proposed Designation

AGENCY: Federal Aviation Administration (FAA), DOT.

ACTION: Notice of proposed rulemaking.

SUMMARY: This notice proposes to designate a Spring Valley, N.Y., transition area over Ramapo Valley Airport, Spring Valley, N.Y. This designation will provide protection to aircraft executing the new VOR RWY 8 instrument approach which has been developed for the airport. An instrument approach procedure requires the designation of controlled airspace to protect instrument aircraft utilizing the instrument approach.

DATES: Comments must be received on or before April 12, 1979.

ADDRESSES: Send comments on the proposal in triplicate to: Chief, Airspace & Procedures Branch, AEA-530, Eastern Region, Federal Aviation Administration, Federal Building, Jamaica, New York 11430. The docket may be examined at the following location: FAA, Office of Regional Counsel, AEA-7, Federal Building, J.F.K. International Airport, Jamaica, New York 11430.

FOR FURTHER INFORMATION CONTACT:

Charles J. Bell, Airspace & Procedures Branch, AEA-530, Air Traffic Division, Federal Aviation Administration, Federal Building, J.F.K. International Airport, Jamaica, New York 11430, Telephone (212) 995-3391.

SUPPLEMENTARY INFORMATION:

COMMENTS INVITED

Interested parties may participate in the proposed rulemaking by submitting such written data, views or arguments as they may desire. Communications should identify the airspace docket number and be submitted in triplicate to the Director, Eastern Region, Attention: Chief, Air Traffic Division, Federal Aviation Administration, Federal Building, J.F.K. International Airport, Jamaica, New York 11430. All communications received on or before April 12, 1979, will be considered before action is taken on the proposed amendment. The proposals contained in this notice may be changed in the light of comments received. All comments submitted will be available, both before and after the closing date for comments, in the Rules Docket for examination by interested persons.

AVAILABILITY OF NPRM

Any person may obtain a copy of this notice of proposed rulemaking (NPRM) by submitting a request to the Chief, Airspace & Procedures Branch, AEA-530, Eastern Region, Federal Aviation Administration, Federal Building, Jamaica, New York 11430, or by calling (212) 995-3391.

Communications must identify the docket number of this NPRM. Persons interested in being placed on a mailing list for future NPRMs should also request a copy of Advisory Circular No. 11-2 which describes the application procedures.

THE PROPOSAL

The FAA is considering an amendment to Subpart G of Part 71 of the Federal Aviation Regulations (14 CFR Part 71) to designate a transition area over Ramapo Valley Airport. The airport is at present overlaid by a 700-foot area and will be controlled in an area generally west to northeast of the airport to a distance of about 11 miles.

THE PROPOSED AMENDMENT

Accordingly, pursuant to the authority delegated to me, the Federal Aviation Administration proposes to amend § 71.181 of Part 71 of the Federal Aviation Regulations (14 CFR Part 71) as follows:

1. Amend § 71.181 of Part 71 of the Federal Aviation Regulations by designating a Spring Valley, New York 700-foot floor transition area as follows:

SPRING VALLEY, N.Y.

That airspace extending upward from 700 feet above the surface within a 6.5-mile radius of the center, 41°06'30" N., 74°01'30" W., of Ramapo Valley Airport, Spring Valley, New York; within a 7-mile radius of the center of the airport, extending clockwise from a 104° bearing to a 146° bearing from the airport; within an 11-mile radius of the center of the airport, extending clockwise from a 256° bearing to a 308° bearing from the airport; within a 12.5-mile radius of the center of the airport, extending clockwise from a 308° bearing to a 016° bearing from the airport; within 5 miles each side of the Sparta, N.J. VORTAC 084° radial, extending from the 6.5-mile radius area to the VORTAC; within 6.5 miles north and 4.5 miles south of the Sparta, N.J. VORTAC 084° radial, extending from 3 miles east of the VORTAC to 20.5 miles east of the VORTAC.

Section 307(a) of the Federal Aviation Act of 1958 (72 Stat. 749; 49 U.S.C. 1348(a)) and of Section 6(c) of the Department of Transportation Act (49 U.S.C. 1655(c)); and 14 CFR 11.65.

NOTE.—The FAA has determined that this document involves a proposed regulation which is not considered to be significant under the procedures and criteria prescribed by Executive Order 12044 and as implemented by interim Department of Transportation guidelines (43 FR 9582; March 8, 1978).

Issued in Jamaica, New York, on January 31, 1979.

LOUIS J. CARDINALI,
*Acting Director, Eastern Region.*

[FR Doc. 79-4809 Filed 2-14-79; 8:45 am]

---

[4910-13-M]

[14 CFR Part 71]

[Airspace Docket No. 79-ASW-2]

## TRANSITION AREA: SPOFFORD, TEX.

### Proposed Designation

AGENCY: Federal Aviation Administration (FAA), DOT.

ACTION: Notice of proposed rule making.

SUMMARY: The nature of the action being taken is to propose designation of a transition area at Spofford, Tex. The intended effect of the proposed action is to provide controlled airspace for aircraft executing instrument approach procedures to the Spofford Airport. The circumstance which created the need for the action is the scheduled establishment of a navigation aid (NDB) at the airport to provide capability for flight under instrument weather conditions to the airport. Coincident with this action, the airport is changed from Visual Flight Rules (VFR) to Instrument Flight Rules (IFR).

DATES: Comments must be received by March 15, 1979.

ADDRESSES: Send comments on the proposal to: Chief, Airspace and Procedures Branch, Air Traffic Division, Southwest Region, Federal Aviation Administration, P.O. Box 1689, Fort Worth, Tex. 76101. The official docket may be examined at the following location: Office of the Regional Counsel, Southwest Region, Federal Aviation

Administration, 4400 Blue Mound Road, Fort Worth, Tex.

An informal docket may be examined at the Office of the Chief, Airspace and Produres Branch, Air Traffic Division.

FOR FURTHER INFORMATION CONTACT:

Ken Stephenson, Airspace and Procedures Branch, ASW-535, Air Traffic Division, Southwest Region, Federal Aviation Administration, P.O. Box 1689, Fort Worth, Texas 76101; telephone 817-624-4911, extension 302.

SUPPLEMENTARY INFORMATION: Subpart G 71.181 (44 FR 442) of FAR Part 71 contains the description of transition areas designated to provide controlled airspace for the benefit of aircraft conducting IFR activity. Designation of the transition area at Spofford, Tex., will necessitate an amendment to this subpart.

COMMENT INVITED

Interest persons may submit such written data, views or arguments as they may desire. Communications should be submitted in triplicate to Chief, Airspace and Produres Branch, Air Traffic Division, Southwest Region, Federal Aviation Administration, P.O. Box 1689, Fort Worth, Texas 76101. All communications received within 30 days after publication of this notice in the FEDERAL REGISTER will be considered before action is taken on the proposed amendment. No public hearing is contemplated at this time, but arrangements for informal conferences with Federal Aviation Administration officials may be made by contacting the Chief, Airspace and Produres Branch. Any data, views or arguments presented during such conferences must also be submitted in writing in accordance with this notice in order to become part of the record for consideration. The proposal contained in this notice may be changed in the light of comments received. All comments submitted will be available, both before and after the closing date for comments, in the Rules Dockets for examination by interested persons.

AVAILABILITY OF NPRM

Any person may obtain a copy of this notice of proposed rule making (NPRM) by submitting a request to the Chief, Airspace and Produres Branch, Air Traffic Division, Southwest Region, Federal Aviation Administration, P.O. Box 1689, Fort Worth, Texas 76101, or by calling 817-624-4911, extension 302. Communications must identify the notice number of this NPRM. Persons interested in being placed on a mailing list for future NPRMs should contact the office listed above.

THE PROPOSAL

The FAA is considering an amendment to Subpart G of Part 71 of the Federal Aviation Regulations (14 CFR Part 71) to designate a transition area at Spofford, Tex. The FAA believes this action will enhance IFR operations at the Spofford Airport by providing controlled airspace for aircraft executing proposed instrument approach procedures using the NDB scheduled for establishment at the airport. Subpart G of Part 71 was republished in the FEDERAL REGISTER on January 2, 1979 (44 FR 442).

THE PROPOSED AMENDMENT

Accordingly, pursuant to the authority delegated to me, the FAA proposes to amend 71.181 of Part 71 of the Federal Aviation Regulations (14 CFR Part 71) as republished (44 FR 442) by adding the Spofford, Tex., transition area as follows:

SPOFFORD, TEX.

That airspace extending upward from 700 feet above the surface within a 5-mile radius of the Spofford Airport (latitude 29°09'58" N., longitude 100°25'05" W.), within 3.5 miles each side of the 204° bearing from the NDB (latitude 29°08'42" N., longitude 100°25'38" W.), extending from the 5-mile radius to 8.5 miles southwest of the NDB.

Section 307(a) of the Federal Aviation Act of 1958 (72 Stat. 749; 49 U.S.C. 1348(a); and Section 6(c), Department of Transportation Act (49 U.S.C. 1655(c)).)

NOTE.—The FAA has determined that this document involves a proposed regulation which is not considered to be significant under the procedures and criteria prescribed by Executive Order 12044 and as implemented by interim Department of Transportation guidelines (43 FR 9582; March 3, 1978).

Issued in Fort Worth, Tex., on February 1, 1979.

PAUL J. BAKER,
*Acting Director, Southwest Region.*

[FR Doc. 79-4810 Filed 2-14-79; 8:45 am]

---

[4910-13-M]

[14 CFR Part 71]

[Airspace Docket No. 77-EA-47]

PROPOSED ALTERATION OF VOR AIRWAYS; WITHDRAWAL OF NPRM

AGENCY: Federal Aviation Administration (FAA), DOT.

ACTION: Withdrawal of notice of proposed rulemaking.

SUMMARY: The notice of proposed rulemaking concerned realignment of segments of VOR low altitude airways (V-36, V-157 and V-273) utilizing the Teterboro, N.J., and Canarsie, N.Y., TVOR/DMEs. New descent procedures into Kennedy International Airport which required the realignment have not been established. For this reason the proposed airway changes are not required at this time and the NPRM is hereby withdrawn.

DATES: February 15, 1979.

FOR FURTHER INFORMATION CONTACT:

Mr. Everett L. McKisson, Airspace Regulations Branch (AAT-230), Airspace and Air Traffic Rules Division, Air Traffic Service, Federal Aviation Administration, 800 Independence Avenue, SW., Washington, D.C. 20591; telephone: (202) 426-3715.

SUPPLEMENTARY INFORMATION: On September 1, 1977, the FAA published for comment a proposal to alter three airways to allow new descent procedures into Kennedy International Airport to be established. Because the new procedures have not been finalized at this time the proposal is withdrawn. The withdrawal of this notice, however, does not preclude the future issuance of a similar notice by the FAA.

WITHDRAWAL OF THE PROPOSAL

Accordingly, pursuant to the authority delegated to me by the Administrator, Airspace Docket No. 77-EA-47, notice of proposed rulemaking, (42 FR 43991), is hereby withdrawn.

(Secs. 307(a) and 313(a), Federal Aviation Act of 1958 (49 U.S.C. 1348(a) and 1354(a)); Sec. 6(c), Department of Transportation Act (49 U.S.C. 1655(c)); and 14 CFR 11.65.)

The FAA has determined that this document involves a proposed regulation which is not significant under the procedures and criteria prescribed by Executive Order 12044 and implemented by interim Department of Transportation guidelines (43 FR 9582; March 8, 1978).

Issued in Washington, D.C., on February 7, 1979.

WILLIAM E. BROADWATER,
*Chief, Airspace and Air Traffic Rules Division.*

[FR Doc. 79-4936 Filed 2-14-79; 8:45 am]

[1505-01-M]

## DEPARTMENT OF HOUSING AND URBAN DEVELOPMENT

### Federal Insurance Administration

[24 CFR Part 1917]

[Docket No. FI-4812]

### NATIONAL FLOOD INSURANCE PROGRAM

### Proposed Flood Elevation Determination for the Town of Jonestown, Coahoma County, Miss.

*Correction*

In FR Doc 79-158, appearing in the issue of Friday, January 5, 1979, on page 1403, the heading should be corrected as set forth above.

---

[4210-01-M]

### Federal Disaster Assistance Administration

[24 CFR Part 2205]

[Docket No. R-79-623]

### FEDERAL DISASTER ASSISTANCE, FIRE SUPPRESSION ASSISTANCE

AGENCY: Federal Disaster Assistance Administration, Department of Housing and Urban Development.

ACTION: Proposed rule.

SUMMARY: This proposed rule amends the Agency's policy regarding fire suppression assistance costs eligible for reimbursement and redesignates § 2205.38 as a new Section 24 CFR 2208.104.

COMMENTS BY: April 16, 1979.

SEND COMMENTS TO: Rules Docket Clerk, Office of General Counsel, Department of Housing and Urban Development, Room 5218, 451 Seventh Street, S.W., Washington, D.C. 20410.

FOR FURTHER INFORMATION CONTACT:

Gene Morath, Office of Public Assistance, FDAA-HUD, Washington, D.C. 20410, Telephone (202) 634-7835.

SUPPLEMENTARY INFORMATION: The proposed rule would amend the cost reimbursement policies contained in 24 CFR 2205.38, incorporate existing cost eligibility criteria contained in the FDAA Fire Suppression Assistance Handbook, 3300.9; and redesignates § 2205.38 as a new Section 24 CFR 2205.104. Consistent with the recodification of FDAA regulations, the balance of subpart C, 24 CFR 2205 will be redesignated as a new subpart G which will include this proposed change. Based on experience in administering the Fire Suppression Assistance program under Section 417, Pub. L. 93-288, and upon consultation with the Forest Service, USDA, and the Bureau of Land Management, DOI, it was determined that the existing eligibility criteria should be expanded to include the cost of certain field support personnel, direct travel and per-diem costs, and the operation of field camps. In accordance with the provisions of Section 417, Pub. L. 93-288, such reimbursement of eligible costs to States pursuant to a Federal-State agreement would be conditioned upon a determination by the FDAA Administrator that the incident fire on publicly or privately owned forest and grassland threatens such destruction as would constitute a major disaster.

Interested persons may participate in this proposed rule making by submitting written data, views or arguments to the Rules Docket Clerk, Office of General Counsel, Room 5218, Department of Housing and Urban Development, 451 7th Street, S.W., Washington, D.C. 20410. Each person submitting a comment should identify this notice, and give reasons for any recommendations. Comments received within 60 days following publication in the FEDERAL REGISTER will be considered before final action is taken on this proposal. Copies of all written comments received will be available for examination by interested persons at the above address. This proposal may be changed in light of the comments received.

A Finding of Inapplicability of Section 102(2)(c) of the National Environmental Policy Act of 1969 has been made in accordance with HUD Handbook 1390.1 (38 FR 19182). Interested parties may inspect and obtain copies of this Finding of Inapplicability of Environmental Impact at the Office of the Rules Docket Clerk of the Department of Housing and Urban Development in Washington, D.C. 20410.

Accordingly, Federal regulations, 24 CFR 2205, are proposed to be revised by deleting § 2205.38 and adding a new § 2205.104 as follows:

(a) Payment is made to the State for its actual eligible costs, subject to verification, as necessary, by Federal inspection and audit. When requested by the State, such payments may be made directly to other Federal agencies for eligible assistance provided by them.

(b) Eligible Costs. Eligible State costs are reimbursed in accordance with the terms and provisions of the Agreement. Only certain costs incurred in Fire Suppression operations are eligible for reimbursement. The following paragraphs describe those specific items which are clearly eligible or clearly ineligible.

(1) Eligible costs of the State consist of the following costs directly related to fire suppression:

(i) All compensation for employees, except as noted under (2)(i) below, directly engaged in authorized fire suppression activities. Included are field support personnel, such as cooks, guards, timekeepers, and supply personnel.

(ii) Travel and per diem costs for employees directly engaged in fire suppression activities.

(iii) Expenses to provide field camps and meals when made available to the eligible employees in lieu of per diem costs.

(iv) Cost for use of publicly-owned equipment use on eligible fire suppression work is based on the FDAA published Schedule of Equipment Rates.

(v) Cost for use of privately-owned equipment is based on the rental rate, provided such costs are comparable to the going rate for the same or similar equipment in the locality as determined by the Regional Director.

(vi) Cost to the State for use of U.S. Government-owned equipment is based on reasonable costs as billed by the Federal agency and paid by the State.

(vii) Cost of firefighting tools, materials, and supplies expended or lost, to the extent not covered by reasonable insurance.

(viii) Repair and reconditioning costs of tools and equipment used in eligible fire suppression activities (other than equipment covered by FDAA equipment rate schedule.)

(ix) Replacement value of equipment lost in fire suppression, to the extent not covered by reasonable insurance.

(x) Costs for personal comfort and safety items normally provided by the State under field conditions for fire fighter health and safety.

(xi) Mobilization and demobilization costs directly relating to the Federal fire suppression assistance approved by the Administrator.

(xii) Eligible costs of local governmental fire-fighting organizations reimbursed by the State, pursuant to an existing cooperative agreement, in suppressing an approved incident fire.

(xiii) State costs for suppressing fires on Federal land in cases where the State has a responsibility under a cooperative agreement to perform such action on a non-reimbursable basis.

(2) Costs which are ineligible for reimbursement are:

(i) Any clerical or overhead costs other than field administration and supervision.

(ii) Any costs for presuppression, salvaging timber, restoring facilities, seeding and planting operations.

(iii) Any costs not incurred during the incidence period as determined by the Regional Director other than directly related mobilization and demobilization costs.

(iv) State costs for suppressing a fire on Federal land where such costs are

reimbursable to the State by another Federal agency under another statute.

(3) In those instances in which assistance under Section 417 of the Act is provided pursuant to existing Interstate Forest Fire Protection Compacts, third party eligible costs is reimbursed in accordance with paragraph (b) above.

(Section 417, Public Law 93-288, 88 Stat. 150 (42 U.S.C. 5150), Executive Order 11795 as amended by Executive Order 11910, 39 FR 25939, Delegation of Authority, 39 FR 28227)

Issued at Washington, D.C., February 5, 1979.

WILLIAM H. WILCOX,
*Administrator, Federal Disaster Assistance Administration.*

[FR Doc. 79-4921 Filed 2-14-79; 8:45 am]

---

[4310-31-M]

## DEPARTMENT OF THE INTERIOR

### Geological Survey

[30 CFR Parts 250, 252]

### OIL, GAS, AND SULPHUR OPERATIONS IN THE OUTER CONTINENTAL SHELF

#### Public Hearings

AGENCY: U.S. Geological Survey, Department of the Interior.

ACTION: Notice of Public Hearings.

SUMMARY: Proposed revisions to 30 CFR 250.34, Exploration, Development, and Production Plans, and 30 CFR Part 252, Outer Continental Shelf (OCS) Oil and Gas Information Program, were published in the FEDERAL REGISTER as proposed rules on January 17, 1979 (44 FR 3513 and 44 FR 3524 respectively). This document announces public hearings to receive oral comments and recommendations on the proposed regulations.

DATES: February 27—Los Angeles, California; March 1—New Orleans, Louisiana; and March 5—Washington, D.C.

ADDRESSES:

February 27, 1979—Los Angeles, California 9 a.m. to 5 p.m.; Regency Room, Hyatt Regency-Los Angeles, 711 South Hope Street, Los Angeles, California 90017.

March 1, 1979—new Orleans, Louisiana, 9 a.m. to 5 p.m.; Tulane Room, Grand Hotel, 1500 Canal Street, New Orleans, Louisiana 70140.

March 5, 1979—Washington, D.C., 9 a.m. to 5 p.m.; Departmental Auditorium, Department of the Interior, 1800 "C" Street, N.W., Washington, D.C. 20240.

FOR FURTHER INFORMATION CONTACT:

Don E. Kash, Chief, Conservation Division, U.S. Geological Survey, MS 600, National Center, Reston, Virginia 22092, (703) 860-7524.

SUPPLEMENTARY INFORMATION: Interested persons may make oral or written presentations regarding the proposed rules at any of the hearings listed above.

Individual testimony at these hearings may be limited if the number of people asking to testify so warrants. However, in no case will less than 15 minutes be allowed for each testifier. Requests for time to make presentations should be made before February 20, 1979, as follows:

Persons wishing to testify in Los Angeles, California, should address their requests for time to the Area Oil and Gas Supervisor, 7744 Federal Building, 300 N. Los Angeles Street, Los Angeles, California 90012, (213) 688-2846.

Persons wishing to testify in New Orleans, Louisiana, should address their requests for time to the Conservation Manager—Gulf of Mexico Region, 336 Imperial Office Building, 3301 Causeway Boulevard, P.O. Box 7944, metairie, Louisiana 70011, (504) 837-4720.

Persons wishing to testify in Washington, D.C., should address their requests for time to the Conservation Manager—Eastern Region, 1725 K Street, Suite 204, Washington, D.C., (202) 254-3137.

The comments and recommendations made at the three public hearings listed above will be recorded, and transcripts of the meetings will be made part of the record relating to the promulgation of final rules. Copies of the proposed rules published January 17, 1979 (44 FR 3513 and 44 FR 3524), are available from the officials listed above.

The filing of a written statement at the time of giving oral testimony would be helpful and facilitate the job of the court reporter. Submission of written statements to the Chief, Conservation Division, U.S. Geological Survey, care of the officials listed above, in advance of the hearing dates would greatly assist Geological Survey officials who will attend the hearings. Advance submissions will give these officials an opportunity to consider appropriate questions which could be asked to clarify or solicit more specific information from the person testifying. The record will remain open for receipt of additional written comments until March 16, 1979.

Each of the public hearings will continue on the day identified above until all persons scheduled to speak have been heard. Persons in the audience who have not been scheduled to speak and who wish to do so will be heard at the end of scheduled speakers. The hearings will end on each day after all people scheduled to testify and persons present in the audience who wish to speak have been heard. Persons not scheduled to testify, but wishing to do so, assume the reisk of having the public hearing adjourned on any given day unless they are present in the audience at the time all scheduled speakers have been heard.

Dated: February 7, 1979.

JOAN M. DAVENPORT,
*Assistant Secretary, Energy and Minerals.*

[FR Doc. 79-5010 Filed 2-14-79; 8:45 am]

---

[6712-01-M]

## FEDERAL COMMUNICATIONS COMMISSION

[47 CFR Part 18]

[Docket No. 20718; FCC 79-29]

### INDUSTRIAL, SCIENTIFIC, AND MEDICAL EQUIPMENT

#### Second Notice of Proposed Rulemaking; Overall Revision

AGENCY: Federal Communications Commission.

ACTION: Second Notice of Proposed Rule Making.

SUMMARY: On October 6, 1978, the Commission published a proposed overall revision to Part 18 governing industrial, scientific and medical equipment. The proposed revision was issued to reduce the interference potential of microwave ovens, industrial heaters, and medical equipment. This proposed rule sets forth procedures for measuring and determining compliance with the proposed technical specifications.

DATES: Comments must be received on or before May 1, 1979 and Reply Comments must be received on or before June 1, 1979.

ADDRESSES: Federal Communications Commission, 1919 M. St., N.W., Washington, D.C. 20554.

FOR FURTHER INFORMATION CONTACT:

Art Wall, Office of Chief Engineer, FCC, Washington, D.C. 20554, 202-632-7095.

Adopted: January 18, 1979.

Released: January 29, 1979.

In the matter of overall revision of Part 18 governing industrial, scientific, and medical equipment, Docket 20718, 44 FR 3999, Jan. 19, 1979.

1. The original Notice of Proposed Rule Making[1] in this proceeding stated that the procedures for measuring and determining compliance with the proposed technical specifications would be published at a later date. The test procedures are appended to this second notice.

[1] Notice of Proposed Rule Making, Adopted September 19, 1978, released September 29, 1978, FCC 78-656, 43 FR 46326 October 6, 1978, Paragraph 54, page 21.

2. In addition to the five test procedures for determining compliance, the Commission is proposing to continue the requirement for semi-annual inspection of certain ISM equipment, as stated in the original proposal. The inspection procedure is attached as Appendix A. Comments are requested on the need, benefit, and costs of such inspections. For example, have a sufficient number of deficiencies been uncovered by inspection presently required in 47 CFR 18.105 to warrant continuation of this requirement? Are there alternative means of maintaining the continued compliance of ISM-registered equipment?

3. Interested persons may file comments on or before May 1, 1979, and reply comments on or before June 1, 1979, pursuant to the applicable procedures in § 1.415(b) of FCC rules. In accordance with the provisions of § 1.419.(b) of FCC rules an original and five copies of all statements, briefs, and comments or reply comments shall be furnished to the Commission. Members of the public who wish to express their interest by participating informally in this rulemaking proceeding may do so by submitting one copy of their comment, without regard to form, provided the submission is identified as a comment in Docket 20718. All relevant and timely comments and reply comments will be considered by the Commission before final action is taken. Comments and reply comments, when received will be available for public inspection during regular business hours in the Commission's Docket Reference Room (239) at 1919 M Street, N.W., Washington, D.C.

4. Accordingly, the FCC orders that this second Notice of Proposed Rule Making is included in this proceeding. Authority for these proposed amendments are contained in Sections 4(i), 301, 302, and 303(r) of the Communications Act, as amended.

5. FOR ADDITIONAL INFORMATION CONTACT:

Art Wall, Federal Communications Commission, Office of the Chief Engineer, 2025 M Street, N.W., Washington, D.C. 20554, Phone: (202) 632-7095.

FEDERAL COMMUNICATIONS COMMISSION,
WILLIAM J. TRICARICO,
*Secretary.*

APPENDIX A

THIS IS A PROPOSED REVISION OF BULLETIN OCE-8 DATED SEPTEMBER 17, 1958

This proposed bulletin is issued as a part of the Notice of Proposed Rule Making in FCC Docket 20718. Comments on this bulletin are solicited and should preferably be combined with those on the technical specifications proposed in this proceeding. Comments should clearly reference FCC Docket 20718 and should be submitted by May 1, 1979. Reply comments may be submitted by June 1, 1979. Federal Communications Commission, Office of the Chief Engineer, Washington, D.C. 20554.

1. It is proposed to revise and add Bulletin OCE 8 as a new Appendix A to 47 CFR Part 18 as follows:

APPENDIX A—BULLETIN OCE 8—INSPECTION PROCEDURE FOR ISM EQUIPMENT

*1.0 Introduction* Industrial, Scientific, and Medical (ISM) equipment, such as large industrial heaters, plastic heat sealers, etc., generate and use radio frequency energy to ionize a gas, heat a dielectric material, harden metal, or to perform some other industrial, scientific, or therapeutic function. To provide assurance that this energy is not a source of harmful interference to radio communications, ISM equipment must be manufactured and operated under regulations promulgated by the FCC.

*1.1* ISM equipment is subject to the following rules:

FCC Part 18—Technical specifications governing the manufacture and operation of the equipment.

FCC Part 2 Subpart I—Regulations governing marketing.

FCC Part 2 Subpart J—Procedures for obtaining the required equipment authorization.

FCC Part 2 Subpart K—Regulations governing importation.

*1.2* Equipment that is too large, or for some reason, cannot be measured for compliance on an approved test site, must be tested in at the operating position in accordance with the procedures in Bulletin OCE-49. Such equipment must be individually ISM-registered pursuant to § 18.32 (47 CFR 18.32) of the rules. In addition, each piece of ISM-registered equipment must be inspected semi-annually by a qualified inspector pursuant to § 18.36 of the rules. INSPECTIONS ARE THE OPERATOR/OWNER'S RESPONSIBILITY.

*1.3* The purpose of this bulletin is to assist the inspector in making the required semi-annual inspections of the equipment. The inspection procedures described herein may also be used by the operators of ISM equipment that have received certification from the Commission to insure continued compliance of such equipment.

*2.0 Qualifications of the Inspector.* The inspector shall be a person having training and experience in interference suppression. In addition, it is desirable that he be skilled in making and interpreting field strength measurements. Although the inspector should preferably be an engineer, an electrician or maintenance employee who has received special training in interference control and suppression techniques may be qualified to act as the inspector.

*3.0 Special Inspections.* Notwithstanding the semi-annual inspections, if the operator suspects an unsafe or modified operating condition that may increase the emissions from his equipment, he must have a qualified individual make a special inspection of the equipment, and if necessary, have field strength measurements made to insure continued compliance.

The frequency at which special inspections are made will depend on the inspector's knowledge of the operation and use of the equipment, frequency stability of the oscillator, the care of the equipment by employees, past interference reports, and any other factor that may be applicable to a particular installation.

*4.0 Inspection Procedure.*

*4.1* The inspection should cover everything, which in the opinion of the inspector, is necessary to affirm the continued compliance of the equipment. A visual inspection of the equipment shall include the following checks:

(a) Overall appearance of the equipment. Special attention should be made to any noticeable changes in the equipment or its location since the last inspection; i.e., changes that effect the technical data reported to the Commission.

(b) All missing or lose screws and covering paltes shall be replaced and secured.

(c) A view of the manufacturer's installation instructions and operating manual should be made to vertify the proper instructions are adhered to.

*4.2* Although not required, it may be useful to the inspector to take relative readings with some type of field strenth indicating device, such as a spectrum analyzer, at the time of or just after measurement are taken for ISM-registration. Care must be taken at the time the relative readings are made to note the exact condititions and meter setting that were used.

*4.3* If the equipment is designed to operate on one of the ISM frequencies specified in § 18.100 of the rules (47 CFR 18.100), the fundamental frequency of operation shall be measured under different load conditions. If the equipment is out of tolerance, appropriate steps shall be taken to bring the equipment back on the ISM frequency.

*4.3.1.* Frequency counters can be used directly for frequency measurements on equipment having good frequency stability and little or no modulation on their emissions. Where the equipment is unstable, has its frequency affected appreciably by load affects, is pulsed or heavily modulated, it will be necessary to employ a spectrum analyzer to observe the frequency variations and use a tracking oscillator and frequency counter to measure the frequency of the equipment under the various test conditions.

*5.0 Inspection log required.* Pursuant to § 18.36 (47 CFR 18.36), a log of the inspections shall be maintained by the operator listed on the grant of ISM-registration. The inspector shall enter a note of his findings, and of all corrective actions taken. The entry shall be dated and signed by the inspector. The full name, address, and qualifications of each inspector the equipment shall be included in the log.

APPENDIX B

THIS IS A PROPOSED REVISION OF BULLETIN OCE 20 DATED OCTOBER 1974 (SEE FCC NOTICE OF PROPOSED RULE MAKING IN DOCKET 20718)

This proposed bulletin is issued as a part of the Notice of Proposed Rule Making in FCC Docket 20718. Comments on this bulletin are solicited and should preferably be combined with those on the technical specifications proposed in this proceeding. Comments should clearly reference FCC Docket 20718 and should be submitted by May 1, 1979. Reply comments may be submitted by June 1, 1979. Federal Communications Commission, Office of the Chief Engineer, Washington, D.C. 20554.

2. It is proposed to revise and add Bulletin OCE 20 as a new Appendix B to 47 CFR Part 18 as follows:

APPENDIX B—BULLETIN OCE 20—PROCEDURE FOR MEASURING RADIOFREQUENCY EMISSIONS FROM MICROWAVE ISM EQUIPMENT (1-40 GHz)

*1.0 Introduction.* This bulletin describes the procedures for measuring radiofrequency emission from microwave (1-40 GHz) industrial, scientific, and medical (ISM) equipment. These equipments are subject to the following regulations:

Part 18—Technical specifications governing operations.

Part 2 Subpart I—Marketing regulations.

Part 2 Subpart J—Procedures for obtaining equipment authorization.

Part 2 Subpart K—Regulations governing importation.

Typical examples of microwave ISM equipments, include, but are not limited to domestic microwave ovens, microwave diathermy equipment, microwave food processors, and microwave industrial heaters. Domestic ovens are, by far, the most common example of such equipment.

*2.0 Characteristics To Be Measured.* Procedures described herein are intended for measuring the operating frequency, the maximum power delivered to a load, and the strength of radiations on the fundamental and all harmonic and spurious frequencies up to at least the 10th harmonic or 40 GHz, whichever comes first.

*3.0 Conducted RF Voltage.* The procedure in bulletin OCE-47 shall be used for measuring line conducted RF voltage.

*4.0 Test For Radiation Hazard.* Domestic microwave ovens are required to comply with the current Bureau of Radiological Health Standard for excessive leakage radiation. Personnel making tests are advised to first check for excessive leakage radiation with a suitable probe, e.g. the Narda Model 8100 Electromagnetic Radiation Monitor. Ovens submitted to the FCC in conjunction with the FCC approval and spot checking program which have leakage radiation apparently in excess of the BRH limit will not be tested and will be reported to BRH for their evaluation.

*5.0 Test Facility.* A description of the test facility shall be on file with the Commission pursuant to Section 2.951 of FCC rules. (Note: This requirement is proposed in FCC Docket 21371. If final rules in this proceeding have not been adopted at the time tha pplication for certification is filed, a description of the measurement facilities and site used shall accompany the application for certification.)

*6.0 Equipment Under Test (EUT).* The equipment under test (EUT) shall be configured and operated in a manner which maximizes its emission characteristics in a typical installation. Power and signal distribution, grounding and interconnecting cooling, and physical placement of EUT shall simulate the typical application and usage in so far as practical. If the EUT has several typical installations, tests shall be made for each installation. In each installation a description, complete with a sufficient number of photographs showing the layout of connecting cables and configuration of equipment shall accompany the report of measurements. The EUT shall be furnished with rated (nominal) voltage as specified in the individual equipment power requirements.

*7.0 Operating Conditions.* The EUT shall be operated at the specified loan conditions (mechanical and/or electrical) for which it is designed. Loads may be actual or simulated as described below.

*7.1 Microwave Oven Load.* For all measurements the energy developed by the oven is absorbed by a dummy load consisting of tap water in a beaker. The "Nalgene" Cat. No. 1201-1000 polypropylene beaker, or equivalent, shall be used as the container; however, a beaker of similar dimensions in "Pyrex" or other low-loss material should be equally suitable. If the oven is provided with shelf or other utensil support, tests are made with this in its normal position. The quantity of water to be used is specified in Paragraph 7.1.1, 7.1.2, and 7.1.3. For ovens rated at 1000 watts or less power output, the beaker shall contain the quantities of water given in Paragraphs 7.1.1, 7.1.2, and 7.1.3. For ovens rated at more than 1000 watts output, each quantity is increased by 50% for each 500 watts or fraction thereof in excess of 1000 watts. Additional beakers shall be used, if necessary.

*7.1.1 Load For Measurement of Power Output.* This load consists of 1000 milliliters of water in the beaker, located in the center of the oven.

*7.1.2 Load for Measurement of Frequency.* Frequency measurements are made with a load of 1000 milliliters of water in the beaker, located in the center of the oven.

*7.1.3 Load For Measurement of Radiation on Second and Third Harmonic.* These tests are made with two load quantities, one of 700 and the other 300 milliliters. Each load is tested both with the beaker located in the center of the oven and with it in the right front corner.

*7.1.4 Load For All Other Measurements.* These are made with a load of 700 milliliters, with the beaker located in the center of the oven.

*7.2 Microwave Medical Diathermy Loads.* Diathermy equipment operating at microwave frequencies usually has several applicators of different sizes, but all are essentially similar to a horn or other type of directional antenna. Since it is not advisable to use humans as test subjects in making radiation, conducted and frequency measurements on these equipments, artificial loads must be used.

*7.2.1* The applicator is highly directional, and must be aimed carefully to maximize the observed signal on each test frequency. The receiving antenna also must be oriented and adjusted in height so as to obtain the maximum indication. Usually, but not in all cases, the maximum radiation on harmonic and spurious frequencies emanates from the applicator. There will be significant radiation from the cabinet if the magnetron filament filter is inadequate.

*7.2.2* These diathermy equipments commonly reduce power for treatment purposes by reducing plate supply voltage to the magnetron. At low power levels the magnetron is subject to moding effects due to plate supply voltage variation and output mismatch. Consequently, most such devices have spurious emissions of considerable strength near the operating frequency. In some cases these may be as much as 400 or 500 MHz from the principal emission. Multiple spurious emissions are also common. When measuring spurious emissions are also common. When measuring spurious emissions near the fundamental (in the ranges 2000-2400 MHz and 2500-3000 MHz), it is desirable to use a narrow band pass filter tuned to the frequency of the emission being measured or a narrow band rejection filter tuned to the fundamental (2450 MHz). The attenuation which this filter has at the test frequency should be taken into account when computing the field strength.

*7.2.3* A high-pass filter also may be required when making measurements on harmonic frequencies to assure that the strong signal at the fundamental frequency does not generate harmonics in the input circuit of the field strength meter.

*8.0 Frequency Measurements.* To show compliance with the reduced frequency tolerance requirements for medical diathermy and consumer ISM equipment designed to operate on an ISM frequency, the following frequency measurements are required.

*8.1* For pulsed equipment, frequency measurements are made by beating a transfer oscillator against the fundamental emission of the oven and measuring the frequency of the oscillator with a suitable frequency counter. Ordinary frequency counters cannot be used to measure the equipment frequency directly in pulsed units. Continuous-wave ISM equipment are measured either by the transfer oscillator method or by direct measurement with a frequency counter. Measurements are made of:

(a) The variation of frequency with time, using the load specified in Section 7.1.2, starting with the EUT and load at room temperature and continuing until the load quantity has been reduced by evaporation to approximately 20% of the original quantity. This test is made with nominal rated ac supply voltage.

(b) The variation of frequency for line voltage variation from 80% to 125% of nominal rated voltage, starting with the oven warm from at least 10 minutes use, with a load as specified in Section 7.1.2 and with this load at room temperature at the beginning of the test.

*9.0 Measurement of Radiated Emissions.*

*9.1 Test Set-Up.* When possible, the EUT shall be placed on a turntable at normal operating height (approximately 36" for table-model or built-in units, or 12" for floor-mounted ones). Measurements are made using the load described in Section 7.1 or 7.2, as applicable, with nominal rated act supply voltage applied to the oven.

*9.2 Measuring Equipment.* Measurements are made with standard field strength meters, using dipole antennae on frequencies below 1 GHz and horn antennae above 1 GHz. At the FCC Laboratory a POLARAD FIM is used in the range 1-10 GHz, and Stoddard NM-22A, NM-30A, and NM-52 or Empire Devices NF-105 series field strength meters are used in the range below 1 GHz.

*9.2.1 Detector Circuit.* Measurements are made using the average detector in the field strength meter; The emission from a microwave ISM equipment is often a very complex wave resulting from amplitude and frequency modulation of the rf carrier. The emission bandwidth of various EUT's has been found to range from a fraction to several times the bandwidth (3 to 5 MHz) of usual microwave field strength meter.

*9.3 Measurement Procedure.* Initial measurements are made near the EUT with the measuring antenna 10 feet from the nearest part of the EUT. The dummy load specified in Section 7.1 or 7.2 is used, as applicable. The EUT is rotated about its vertical axis on the turntable, and the polarization and

height of the receiving antenna are varied to obtain the highest field strength on the particular frequency under observation. Measurements at the 10 foot distance are made on a standard test site; with the equipment and antenna located so as to minimize effects due to reflections from the building structure or other items in the field. For measurements above 1 GHz and at 10 feet, an antenna of small aperture (i.e., a small horn, without its reflector) is used, because the field over the area of a large antenna would be non-uniform, and such an antenna would not have the gain normally expected.

*9.3.1* At each test frequency, the reading of the field strength meter is observed during the heating cycle as the following factors are varied:

(a) Orientation

(b) Antenna orientation

(c) Antenna polarization

(d) At the second and third harmonic only, the two load sizes and load locations specified in Section 7.1.3.

(e) For microwave ISM equipment, such as ovens, employing mode stirrers, the test should include several cycles of stirrer rotation.

*9.3.2.* At the second and third harmonics, the recorded data should include the highest reading observed for each load size and load location. At other frequencies the highest reading observed should be recorded.

*9.3.3* When measuring sidebands close to the fundamental (near the edges of the ISM band frequency limits) care must be taken to avoid errors caused by overload from the emission at the fundamental frequency. A tunable filter can be usefully employed to reduce the level of the fundamental relative to that of the particular sideband if overload occurs. Overload can be detected by observing the relative change in indicated signal level for different values of input antenuator, either internal or external to the FIM.

*9.3.4* Since most microwave field strength meters have relatively little rejection at the image frequency, care should be taken to assure that apparent spurious emissions in the vicinity of the image frequency are really present. A tunable filter or band-pass filter can be used to annenuate the fundamental frequency as for the side-bands.

*10.0 Data-Reporting Format.* The measurement results expressed in $\mu$V/m at 3 meters for radiated emissions and millivolts for terminal RF voltage shall be presented in tabular and/or graphical form showing measured level at each frequency for direct comparison with the applicable technical specifications. Instrumentation and instrument settings, calibration data, antenna specifications, EUT arrangement, and all other pertinent details shall be included along with the measurement results.

APPENDIX C

THIS IS PROPOSED REVISION OF BULLETIN OCE 39 DATED OCTOBER 1975 (SEE FCC NOTICE OF PROPOSED RULE MAKING IN DOCKET 20718)

This proposed bulletin is issued as a part of the Notice of Proposed Rule Making in FCC Docket 20718. Comments on this bulletin are solicited and should preferably be combined with those on the technical specifications proposed in this proceeding. Comments should clearly reference FCC Docket 20718 and should be submitted by May 1, 1979. Reply comment may be submitted by June 1, 1979. Federal Communications Commission, Office of the Chief Engineer, Washington, D.C. 20554.

3. It is proposed to revise and add Bulletin OCE 39 as a new Appendix C to 47 CFR Part 18 as follows:

APPENDIX C-OCE 39—PROCEDURE FOR MEASURING RADIO FREQUENCY EMISSIONS FROM MEDICAL DIATHERMY EQUIPMENT

*1.0 Introduction.* Medical diathermy equipment is a class of industry, scientific, and medical (ISM) equipment that generates and uses radio frequency (RF) energy for therapeutic treatment. To provide assurance that this energy is not a source of harmful interference, it must be manufactured and operated under regulations promulgated by the FCC.

This equipment is subject to the following rules:

FCC Part 18—Technical specifications governing the manufacture and operation of the equipment.

FCC Part 2 Subpart I—Regulations governing marketing.

FCC Part 2 Subpart J—Procedures for obtaining the required equipment authorization.

FCC Part 2 Subpart K—Regulations governing importation.

*2.0 Characteristics of Typical Equipments.* Three frequency bands are in current use for therapeutic treatment. Equipments operating in the band at 13.56 MHz use crystal-controlled oscillators; the frequency tolerance limits are too small to permit other types of frequency control. Equipments operating in the band at 27.12 MHz may use crystal-controlled oscillators or self-excited power oscillator circuits. The loading must be restricted for the latter type to enable the equipment to stay within the prescribed frequency tolerance limits. Equipments operating in the band at 2450 MHz usually employ fixed-tuned magnetrons.

*3.0 Characteristics To Be Measured.* The technical specifications for medical diathermy are in Subpart B of Part 18 of the FCC Rules. Test procedures described in this bulletin are given for measuring operating frequency, maximum power delivered to the load and the radiated field strength of all emissions (fundamental, harmonics and spurious) up to at least 40 GHz or the thirtieth harmonic, whichever comes first. The procedure for showing compliance with the RF line conducted voltage limit is delineated in Bulletin OCE-47.

*4.0 Test for Radiation Hazard.* The fields from Equipment Under test (EUT) operating on higher frequencies (above 900 MHz) may be of sufficient magnitude to be a hazard to testing personnel. Such fields should be measured first with a suitable radiation monitor, e.g. NARDA Model 8100. testing personnel should take precautions and not expose themselves to appreciable fields for any extended period of time.

*5.0 Measuring Equipment.*

5.1 Frequency counters can be used directly for frequency measurements on diathermy equipment having good frequency stability and little or no modulation on their emissions. Where the diathermy is unstable, has its frequency affected appreciably by load effects, is pulsed or heavily modulated, it is necessary to employ a spectrum analyzer to observe the frequency variations and use a transfer oscillator and frequency counter to measure the frequency of the equipment under the various test conditions.

5.2 Radiation measurements shall be made with a field strength meter that conforms with the requirements of American National Standard Specification For Electromagnetic Interference and Field Strength Instrumentation 10 kHz to 1 GHz C63.2-1977.* Other instruments, e.g., spectrum analyzer, may be used for certain restricted or specialized measurements when correlation data have been taken to establish the methods of conversion of data to that achieved with C63.2 instrumentation.

5.3 The measuring equipment shall be calibrated frequently enough to insure accuracy of measurements, but not more than 6 months before the measurements are made. Adjustments should be made and correction factors applied in accordance with the instruction manual of the instrument.

5.4 For radiation measurements below 18 MHz, a balanced loop antenna with dimensions such that it will be completely enclosed by a square 0.6 meters on a side shall be used. The loop shall be supported in a vertical plane and be rotatable about the vertical axis. The lowest point of the loop shall be 1 meter above the ground.

5.5 For radiated measurements above 25 MHz and below 1 GHz, a tuned calibrated dipole antenna shall be used. The dipole shall be matched to the feeder by a suitable transforming divice (balun).

5.6 For radiation measurements between 18 MHz and 25 MHz, either the loop or dipole antenna may be used.

5.7 For radiation measurements above 1 GHz and below 40 GHz, an appropriate linearly polarized horn antenna shall be used for each frequency measured. The antenna shall be capable of making separate measurements of the vertical and horizontal component of the radiated field.

5.8 The dector function switch shall be set in average or quasi-peak function position.

5.9 The level of radiation shall be reported in terms of the average value of the field strength (in $\mu$V/m or dB above 1 $\mu$V/m) at the distance specified in the rules.

*6.0 Data-Reporting Format.*

6.1 The test results reported to the Commission in support of the application for certification shall be expressed in the units ($\mu$V/m at the specified distance, millivolts, etc.) specified in the rules and presented in tabular graphical form showing measured level at each frequency. A description of the particular test instrument used, instrument settings, calibration information, antennae specifications, equipment under test arrangement and all other pertinent details shall be included along with the test data.

6.2 To be acceptable for certification, medical diathermy equipment with its applicators must comply with all the technical specifications in Subpart B of Part 18 (47 CFR 18.150 *et seq.*). Since some equipments use more than one set of applicators, there can be instances in which an equipment is in compliance with some applicators and not with others. In such a case, certification can

*A draft copy of this standard, which is approved for publication, is available for $5.00 from Ms. Mary Goulding, Institute of Electrical and Electronic Engineers, 345 E. 47th St., New York, NY 10017. A $5.00 check or money order must accompany the order.

be granted covering only those applicators with which the equipment complies with the technical requirements.

*7.0 Description of Test Facility Required.* Individual making measurements on medical diathermy equipment requiring certification must file a description of their test facility with the Commission in accordance with § 2.951 *et seq.*, of the rules.

NOTE.—This requirement is proposed in FCC Docket 21371. *If final rules in this proceeding have not been adopted at the time* the application for certification is filed, a description of the measurement facilities and site used shall accompany the application for certification.

*8.0 Equipment Under Test (EUT).* The equipment under test (EUT) shall be configured and operated in a manner which maximizes its emission characteristics in a typical installation. Power and signal distribution, grounding and interconnecting cabling and physical placement of EUT shall simulate the typical application and usage in so far as practical. If the EUT has several typical installations, tests shall be made for each installation. In each installation a description, complete with a sufficient number of photographs showing the layout of connecting cables and configuration of equipment shall accompany the report of measurements.

The EUT shall be supplied with rated (nominal) voltage as specified in the individual equipment power requirements. The power supplied to the EUT shall be filtered to meet the requirements of Paragraph 12.3.

*9.0 Applicators and Artificial Loads.* Most equipment operating at 13.56 MHz are provided with more than one set of treatment applicators. These may be either capactive or inductive in nature; that is, they are intended to apply electric or magnetic fields to the area of the body to be treated. Equipment operating at 2450 MHz usually has several applicators of different sizes, but all are essentially similar to a horn or other type of directional antenna. Since it is not advisable to use humans as test subjects in making radiation and frequency measurements on these equipments, artificial loads must be used.

9.1 For inductive applicators, such as cables and inductive drums, the load consists of a flat spiral of three turns of ½" wide shield braid (6" I.D./10" O.D.) connected to two medium-base lamp sockets in series. The spiral is cemented between two 12" discs of insulating material for support, with the sockets attached near the center of the outer face of one disc. In use the assembly is coupled to the applicator at such a spacing with that combination of lamps (one or two 100 watt, 200 watt, 300 watt/120 volt or 100 watt/32 volt lamps) whichever produces the greatest power output into the load. Where only one lamp is used, a plug fuse is inserted into the idle socket to complete the circuit. For cable applicators, a wooden spider is used to form the cable into a coil of dimensions similar to the spiral in the load.

9.2 For capacitive applicators, such as pads and cuffs, the load consists of two coplanar metal sheets (7" x 9" 15" c-c) cemented between two insulating sheets 10" x 23", and connected to two medium-base lamp sockets located along the center-line of the upper insulating sheet. The sockets are arranged so that they can be connected either in series or in parallel. In use, the load assembly is coupled to the applicators at such a spacing and with such a lamp combination as produces the greatest power output into the load, using either one or two lamps of the types listed in paragraph 4.1 in series or parallel.

9.3 For contact applicators, such as vaginal or prostate applicators, the load consists of a three-gallon terracotta or glass jar containing two gallons of physiological saline solution. The contact applicator is immersed in the solution and the jar is placed on the pad or other capactive applicator required to complete the electrical circuit. This load may also be used for microwave diathermy tests if desired; however, it is not usual to test these in the loaded condition, since the radiation is greater for the unloaded condition (a load of this type placed in front of the applicator will absorb power both at the fundamental frequency and at harmonic frequencies).

*10.0 Frequency Measurements.*

10.1 Those treatment conditions which load the diathermy lightly, such as treatment of body extremities, will produce the greatest effect on frequency due to load changes, and nearly approach the condition in which the device is loaded only by the radiation from the applicator leads. For such conditions, the load effect on frequency variation is determined by finding the extreme values of frequency obtainable by adjustment of external controls, applicator spacing, and patient load, for each combination of applicators.

10.2 After a five-minute no-load warm up from a cold start at room temperature (without applicators connected), for each combination of applicators determine the maximum and minimum frequency obtainable for very light load by variation of external controls and applicator spacing.

10.3 Using that combination of applicators, load, and load spacing which produces the maximum observable power output into the load, operate the equipment from a cold start at room temperature for a period of six hours (two hours for portable equipment, i.e., table models). Measure the frequency at the beginning of the run and at frequent intervals until its completion.

10.4 After the run described in Paragraph 10.3, immediately repeat the observations described in Paragraph 10.2 for all applicators.

10.5 Pursuant to § 18.102, the maximum and minimum frequencies measured in the tests described in paragraphs 10.2, 10.3, and 10.4 must be within 70% of the frequency tolerance listed in Section 18.100 for the band used.

*11.0 Radiation Measurements: EUT Operating Below 900 MHz.*

11.1 A search using a FSM or spectrum analyzer with a broadband antenna within 10 feet of the EUT should be made to determine those frequencies on which the equipment has the strongest radiation. This test should be made with all applicator combinations, both with and without load. The frequency selected from this test should include all those within 20 dB of the strongest emission observed in the series, taking into account the calibration of the antenna(s) and equipment used. The frequency range examined should extend from the lowest frequency generated in the EUT to the thirtieth harmonic.

11.2 The EUT shall be placed on a rotatable non-conducting test platform one meter in height, fed with power and control circuits via underground cable. The measuring equipment shall be placed so its receiving antenna is 30 meters from the center of the platform and at a height above ground where the center line of the aerial is the same height as the approximate center of the EUT. The EUT and load, the table on which the applicator and loads are placed, shall be located on the platform that the group is symmetrical about the axis of rotation of the platform. For each frequency, having significant strength for each applicator combination, both with and without load, rotating the platform to determine the orientation giving the maximum observable value. This must be done for both horizontal and vertical polarization of the receiving antenna.

11.3 Some HF diathermy equipment has a discontinuous or pulsed output. It is not possible to obtain accurate measurements of the average value of the emissions from these devices if the field strength meter uses a logarithmic amplifier in the metering circuit. The measurements should be made with one of the non-logarithmic FSM (such as Stoddart NM-30 or Empire NF-105) if possible. If a logarithmic FSM must be used, the observations should be made with the FSM function switch in the quasi-peak position, and the average value computed for each observation on the basis of the measured characteristics of the transmitted pulse.

*12.0 Field Strength Measurements: EUT Operating Above 900 MHz.* Radiation measurements for medical diathermy operating on frequencies above 900 MHz shall follow the test procedure described in Bulletin OCE-20 for microwave ISM equipment.

APPENDIX D

THIS IS A PROPOSED NEW BULLETIN OCE 47

This proposed bulletin is issued as a part of the Notice of Proposed Rule Making in FCC Docket 20718. Comments on this bulletin are solicited and should preferably be combined with those on the technical specifications proposed in this proceeding. Comments should clearly reference FCC Docket 20718 and should be submitted by May 1, 1979. Reply comments may be submitted by June 1, 1979.

Federal Communications Commission, Office of the Chief Engineer, Washington, D.C. 20554.

4. It is proposed to revise and add Bulletin OCE 47 as a new Appendix D to 47 CFR Part 18 as follows:

APPENDIX D-OCE 47—PROCEDURE FOR MEASURING RF LINE CONDUCTED VOLTAGE

*1.0 Introduction:*

*1.1* Many electronic devices in use today generate and use radio frequency (RF) energy as part of their operation. Unless properly filtered, a part of this energy is conducted via the power cord back into the public utility network and is capable of causing malfunctions in other equipment (such as a receiver) connected to this network. A part of the RF energy on the power network may also be radiated and cause malfunctions in equipment which is in the vicinity of the network even though not connected to the network.

To reduce this interference potential, the FCC has adopted limits on the amount of RF energy fed back into the public utility power network for many classes of equip-

ment. For example, radio receivers and low power communication devices are subject to the specifications in Part 15 of FCC rules; low voltage (less than 600 volts r.m.s.) industial, scientific, and medical (ISM) equipment are subject to the specifications in Part 18 of the rules.

*1.2* This bulletin describes the procedure for measuring RF line conducted voltage. The procedure for determining compliance with other technical parameters are described in a number of different OCE Bulletins.

*1.3* In addition to technical specifications, the equipment may also be subject to one or more of the Commission's equipment authorizations (certification, type acceptance, type approval, ISM registration). The procedure for obtaining FCC approval is set out in Subpart J of Part 2 of the Rules. Compliance with both the technical and equipment authorization (if required) specifications is a prerequisite for marketing the equipment. The marketing and importation specifications are set out in Subpart I and K of Part 2 of the rules, respectively.

*2.0 Low Voltage and Low Current RF Devices.* Radio receivers and other low power equipment operating with less than 150 volts (rms) and 3 amperes (single phase) may use the procedure specified in the standard IEEE—213—1961 "RADIO INTERFERENCE: Methods of Measurement of Conducted Interference Output to the Power Line from FM and Television Broadcast Receivers in the Range of 300 kHz to 25 MHz."[1] This procedure may be used for other than broadcast receivers, provided it is modified to account for the different operating conditions. For equipment operating with a current and voltage rating greater than 3A and 125 volts, the procedure in this bulletin shall be used.

*3.0* General Test Conditions. In general, measurements shall be made with the equipment under test (EUT) connected to the power line through a standard radio frequency (RF) impedance which is to be provided by a line impedance stabilization network (See paragraph 3.3). The network must be inserted in series with each current carrying conductor in the line supplying power to the EUT. For ISM equipment, tests shall be made under full load, half load, and no load conditions with any external attachments stretched out in both the horizontal and vertical planes.

*3.1 Test Site.* Powerline measurements should be made in a screened enclosure. A description of the test facility shall be filed with and approved by the Commission, pursuant to § 2.951 of the rules. (Note: This requirement to file a description of the test facility is proposed in FCC Docket No. 21371.)

*3.2 Measuring Instrumentation.*

*3.2.1* Measurements shall be made with a radio noise meter conforming to the requirements of American National Standard Specification For Electromagnetic Interference and Field Strength Instrumentation 10 kHz to 1 GHz C63.2-1977.[2] Other instruments may be used for certain restricted or specialized measurements when correlation of data have been taken to establish the methods of conversion of data to that achieved with C63.2 instrumentation.

*3.2.2* The radio noise meter shall be calibrated and checked frequently enough to assure its accuracy. Adjustments should be made and correction factors applied in accordance with instruction contained in the manual for the radio noise meter.

*3.2.3* The detector function selector of the meter shall be set to average or quasi-peak. Where a correlation can be shown between average and some other detector function for a particular piece or class of equipment, that detector function may be used.

*3.2.4* The bandwidth of the meter shall be set in accordance with the following:

| Measurement Frequency Range | Required Bandwidth |
|---|---|
| 10–250 kHz | 1 kHz |
| 0.250–25 MHz | 10 kHz |

Where these bandwidths cannot be used, another bandwidth may be used provided the measured value is adjusted accordingly.

*3.3 Line Impedance Stabilization Network (LISN).* To insure a defined impedance at radio frequencies across the power feed at the point of measurement of terminal voltage and also to provide isolation of the EUT from the ambient RF energy on the power line, a Line Impedance Stabilization Network (LISN) with the impedance characteristics shown in figure 1 shall be used. For measurements over the frequency range 0.15 to 30 MHz, the network in figure 2 shall be used. For measurement from 0.01 to 30 MHz, the network in figure 3 shall be used.

*3.3.1* A coaxial-type connector shall be provided for connection of the radio-noise meter by means of a 50-ohm cable, or connection of a 50-ohm terminating resistance across the 1000-ohm resistor. Provisions shall be made for bonding the LISN enclosure to the ground plane used. If a direct bond is not possible, for instance with concrete floors, a metal sheet 2 meters square shall be placed under the LISN and bonded to the LISN by a short low impedance connection.

*3.3.2* When isolating and artificial mains networks cannot be used, the method shown in figure 4 shall be used. The measurement shall be made between each line and a suitable earth (earth plate, water pipe, metal tube) with a blocking capacitor C and a resistor such that total impedance between line and earth is 1500 ohms. The effect on the accuracy of measurement of any device used to protect the measuring set against dangerous current shall either be less than 10 dB or be allowed for in the calculations.

*3.3.3* When making voltage measurements, care must be taken to avoid spurious radio frequency voltage being induced into the supply leads by direct pick-up, and it may be necessary to screen the measuring set and the supply leads from the EUT.

*3.4 Operating Conditions.*

*3.4.1* The equipment under test (EUT) shall be operated at the specified load condition (mechanical and electrical) for which it is designed. Load may be actual or simulated as may be described, herein, for particular types of equipment.

*3.4.2* The EUT shall be operated for a sufficient period of time to approximate normal operating conditions. The warm-up time used in the test shall be stated along with the test results.

*3.4.3* The EUT shall be grounded in accordance with the equipment requirements and condition of actual use. When the EUT is furnished with a grounded terminal or internally grounded lead, the ground lead (or connection) shall be connected to the ground plane simulating actual installation condition. Any internally grounded lead included in the plug end of the line cord of the EUT shall be connected to ground through the utility power service. (See also Sections 3.4.4 and 3.6 below.)

*3.4.4* The network in figure 4 may be used for measuring RF line conducted voltage when measured at the user's site. The results of the measurements will be dependent on the impedance presented by the power-system and may vary with time and location due to variations in the power system impedance. If this is the case, the tests shall be repeated over a suitable period of time to determine the variation in measured values. Such test results shall be regarded as unique to the particular installation environment in which the EUT was tested.

*3.4.5* The EUT shall be secured to mounting bases having shock or vibration isolators, if such mounting bases are used in the installation. Any bonding straps furnished with the mounting base shall be connected to the ground plane. When mounting bases do not have bonding straps, bonding straps shall not be used in the test set-up.

*3.5 EUT Configuration.*

*3.5.1* In general, the EUT shall be configured and operated in a manner which tends to maximize its RF emanation characteristics in a typical application. Power and signal distribution, grounding, interconnection cabling and physical placement of subassemblies of the EUT shall simulate the typical application and usage. At least one subassembly of each type shall be operative in each equipment evaluated in a test unit, and for system test units, at least one of each type of equipment that can be included in the possible system configurations shall be included in the test unit. Following this procedure will permit the results of an evaluation of test units having more than one type of module or equipment to be applied to configurations having more than one of each of those modules or equipments.

*3.5.2* In the case of EUT which functionally interacts with other units, including any unit that is dependent on a host unit for its power interface, either the actual interfacing units or simulators may be used to provide representative operating conditions provided the effects of the simulator can be isolated or identified. If a unit of equipment is designed to be a host unit to other equipment, such other equipment may have to be connected in order that the host unit shall operate under normal conditions.

*3.5.3* It is important that any simulator used in lieu of an actual interfacing unit properly represent the electrical and mechanical characteristics of the interfacing unit, especially its RF signals and impedances. Following this procedure will permit the results of measurements of individual equipment system elements to remain valid for system application and integration of the element with other similarly tested ele-

[1] This standard is available for purchase from the Institute of Electrical and Electronics Engineer, Inc., 345 East 47th St., New York, New York 10017. Purchase price is $3.00 as of August 1978.

[2] A draft copy of this standard, which is approved for publication, is available for $5.00 from Ms. Mary Goulding, Institute of Electrical and Electronic Engineers, 345 E. 47th St., New York, NY 10017. A $5.00 check or money order must accompany the order.

ments, including elements produced and tested by different manufacturers.

*3.5.4* Notwithstanding the above and where possible, the EUT shall be placed 40 cm from conducting surface of at least 2-meters square unless it is floor-standing and shall be kept at least 80 cm from any other conducting surface. If the measurement is made in a shielded enclosure, the distance of 40 cm may be referred to one of the walls of the enclosure.

*3.5.5* If the EUT is not equipped with a flexible input power lead, it shall be placed at a distance of 80 cm from the LISN (or mains outlet where a LISN cannot be used) and connected thereto by a lead of length not greater than 1 meter.

*3.5.6* If the EUT is supplied with a flexible lead, the voltage shall be measured at the plug power line end of the lead. The length of the lead in excess of the 80 cm separating the EUT from the LISN (or mains outlet where a LISN cannot be used) shall be folded back and forth so as to form a bundle not exceeding 30 cm to 40 cm in length.

*3.5.7* If the EUT is normally operated with a ground connection, the EUT shall be connected to ground at the LISN through a conductor provided in the flexible lead.

*3.5.8* If the EUT is normally operated while held in the hand, then measurements shall be made using an artificial hand to simulate the effects of the users hand. The artificial hand shall consist of metal foil wrapped round the case, or part thereof, as specified below. The foil shall be connected to one terminal of an RC element consisting of a 200-pF capacitor in series with a 500-ohm resistor; the other terminal of the RC element shall be connected to ground.

When the case of the EUT is entirely of metal, no metal foil is needed. The capacitor of the RC element shall be connected directly to the body of the EUT. When the case of the EUT is entirely of insulating material, metal foil shall be wrapped around the handle(s) and also wrapped around the body that the user may contact. All pieces of metal foil shall be connected together and to the capacitor terminal of the RC element. When the case of the EUT is partly metal and partly insulating material, and has insulating handles, metal foil shall be wrapped around the handles and on the non-metallic part of the body; the metal foils around the handles and the metal foil on the body shall be connected together and to the capacitor terminal of the RC element.

*3.6 EUT Power Leads.*

*3.6.1* All EUT input power leads, except ground leads, shall individually be connected through a LISN to the input power source. All unused 50-ohm connectors of the LISN shall be resistively terminated in 50 ohms when not connected to the radio-noise meter.

*3.6.2* If the EUT is normally used with unshielded power leads, it shall be connected to the LISN and tested with unshielded leads. If the EUT is normally operated with shielded or armored leads, the tests shall be made using such leads.

*3.7 Data Reporting Format.*

*3.7.1* Powerline measurement results shall be expressed in microvolts ($\mu$V) or in dB above 1$\mu$V (dB $\mu$V) developed across the 50 ohm LISN port terminated into a 50 ohm meter. Results shall be presented in tablular or graphical form showing level versus frequency. Instrumentation, all settings, EUT arrangement and all other pertinent details shall be included along with the measurement results. All voltage measurements shall be made at the plug end of the EUT and LISN.

[6712-01-C]

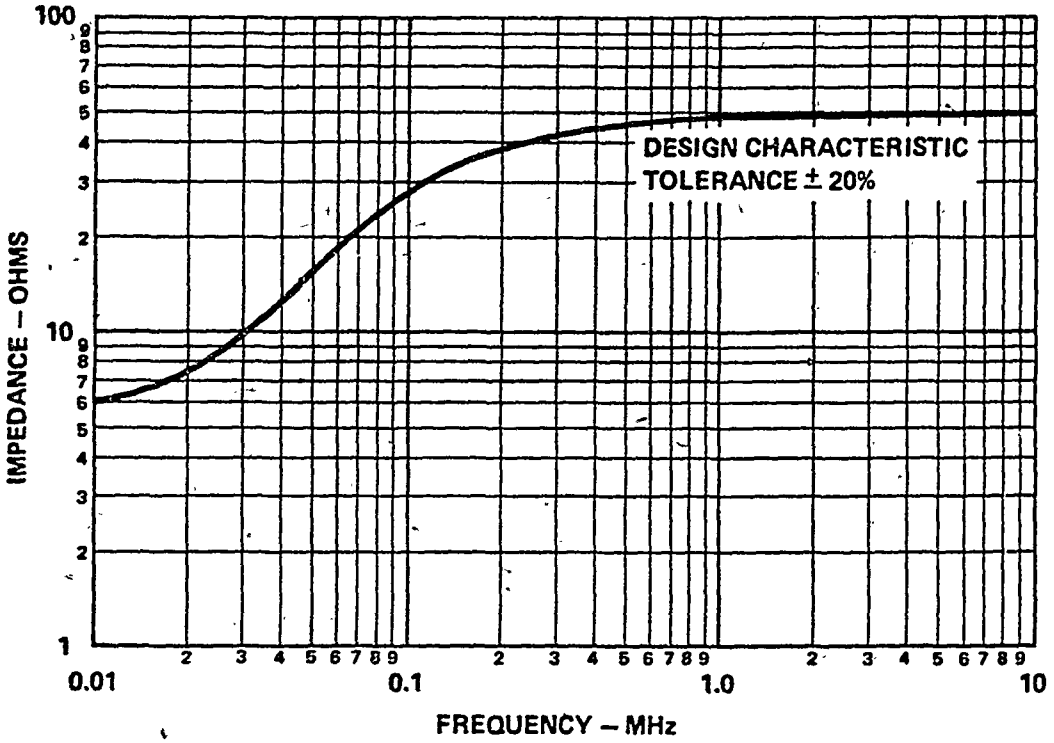


FIGURE 1 IMPEDANCE CHARACTERISTIC OF LISNS: (10 kHz TO 30 MHz)

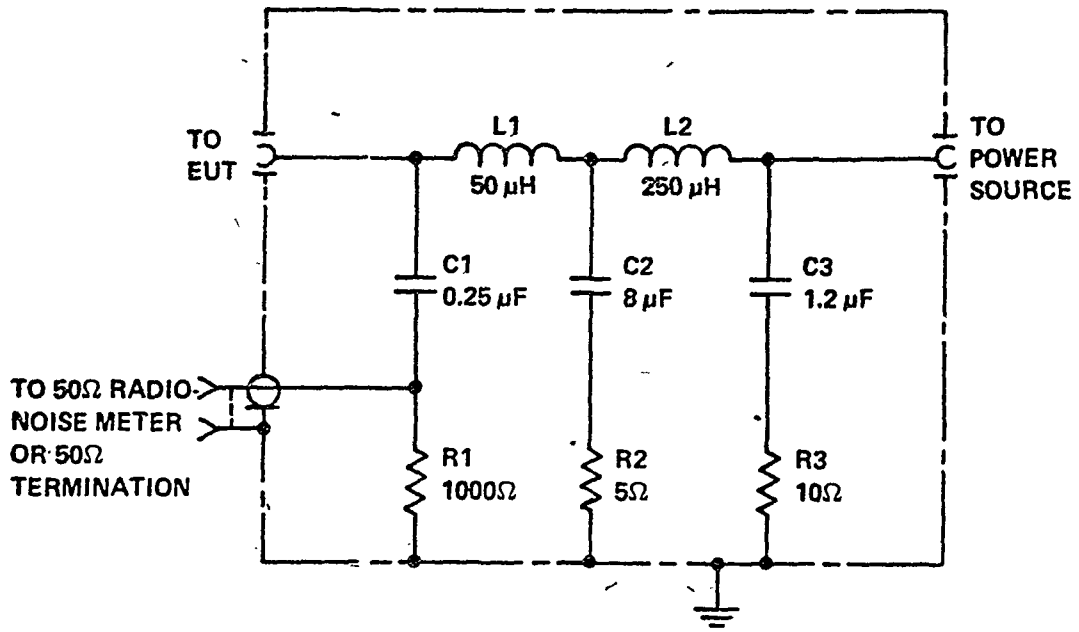


FIGURE 2 CIRCUIT DIAGRAM OF LISN TO PROVIDE IMPEDANCE OF FIGURE 3 FOR THE 0.01 – 30 MHz FREQUENCY RANGE

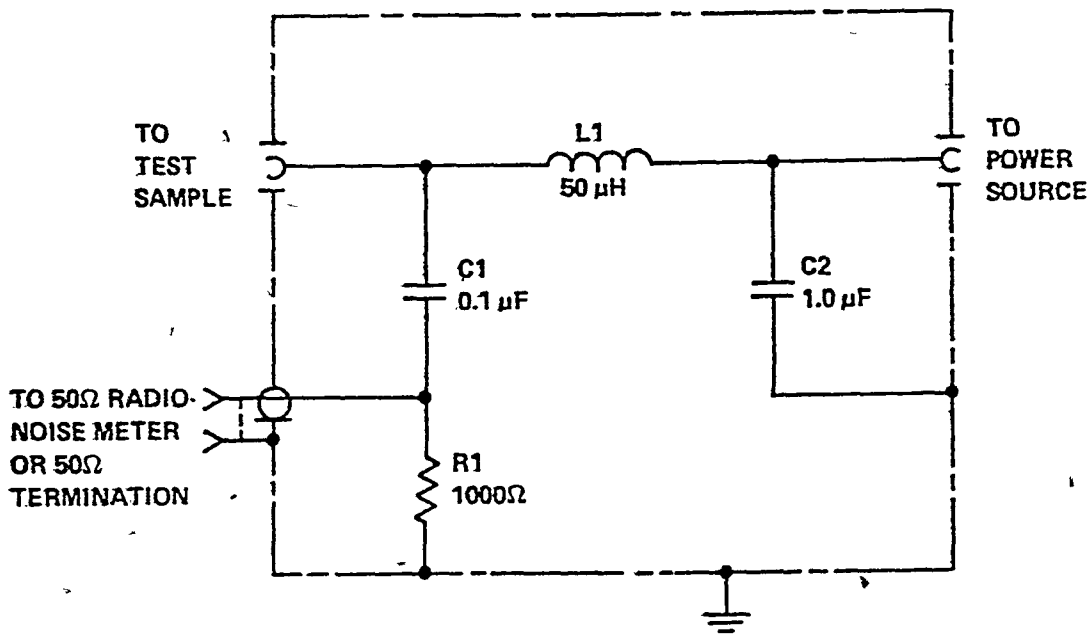


FIGURE 3 CIRCUIT DIAGRAM OF LISN TO PROVIDE IMPEDANCE OF FIGURE 3 FOR THE 0.15 – 30 MHz FREQUENCY RANGE

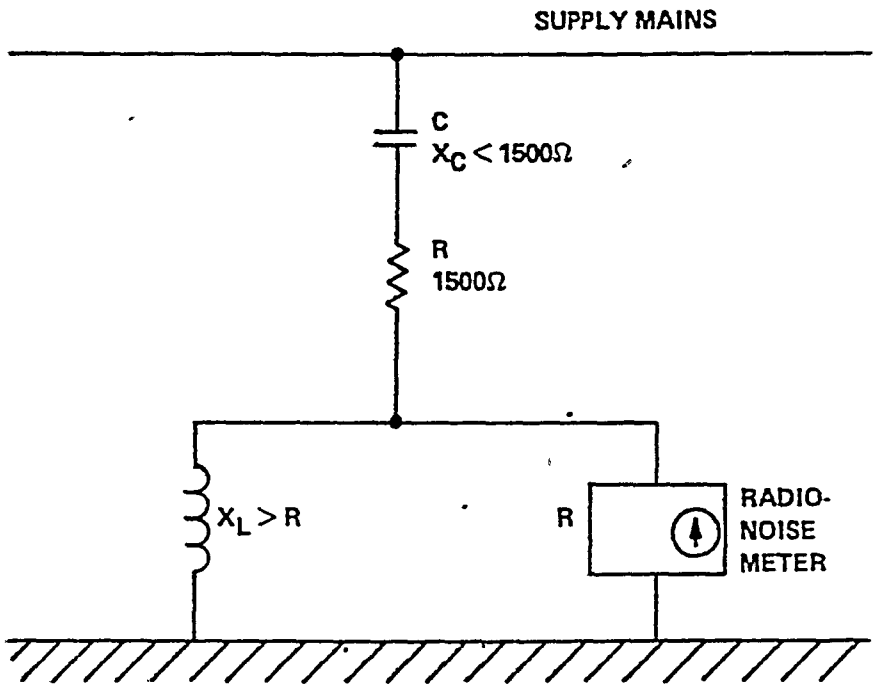


FIGURE 4 LINE PROBE FOR TESTS AT USER'S INSTALLATION

[6712-01-M]

APPENDIX E

THIS IS A PROPOSED NEW BULLETIN OCE 48

This bulletin is issued as a part of the Notice of Proposed Rule Making in FCC DOCKET 20718. Comments on this bulletin are solicited and should preferably be combined with those on the technical specifications proposed in this proceeding. Comments should clearly reference FCC DOCKET 20718 and should be submitted by May 1, 1979. Reply comments may be submitted by June 1, 1979. Federal Communications Commission, Office of Chief Engineer, Washington, D.C. 20554.

5. It is proposed to revise and add Bulletin OCE 48 as a new Appendix E to 47 CFR Part 18 as follows:

APPENDIX E—OCE 48 PROCEDURE FOR MEASURING RADIATED EMISSIONS FROM ISM EQUIPMENT ON APPROVED TEST SITE

*1.0 Introduction.* This bulletin describes the procedure for measuring radiated emissions from Industrial, Scientific, and Medical (ISM) Equipment subject to certification under Part 18 of FCC rules (47 CFR Part 18). Where another procedure is specified in the rules for a particular class or type equipment, that test procedure shall be used; e.g., the procedures for measuring radiated emissions from microwave ovens and medical diathermy equipment are described in Bulletins OCE-20 and OCE-39, respectively. The procedure for measuring line conducted voltage is described in Bulletin OCE-47.

*1.1 Certification Requirement.* ISM equipment capable of being measured on an approved test site requires certification to show compliance with the technical specifications in Part 18. Certification is mandatory for: domestic microwave ovens, consumer ISM products, ultrasonic equipment with less than 500 watts output, and medical ISM products. The procedure for obtaining certification is set out in Subpart J of Part 2 of the rules. ISM equipment that for some practical reason cannot be measured for compliance on an approved test site must be individually approved under the ISM-Registration program. Certification applies to subsequently produced units that are identical to the ISM equipment tested and approved by the Commission, whereas, ISM-Registration applies only to the equipment tested at that one location. If certification is required, importation and marketing is proscribed pursuant to Subpart I of Part 2 of FCC rules until certification is granted by the Commission. All other ISM equipment must comply with the requirements in § 2.809 of Part 2.

*2.0 Characteristics to be Measured.* 2.1 Measurements shall be made of the operating frequency and of all radiated emissions from 10 kHz up through the thirtieth harmonic of the fundamental emission of the Equipment Under Test (EUT), or up to 40 GHz, whichever comes first.

*3.0 Test Site.* The test site for making radiated ISM measurements shall comply with the specifications in § 2.951 of the Commission's Rules. (Notes: These specifications are propsoed in FCC Docket No. 21371.) A description of the test facility must be filed with and approved by the Commission, pursuant to § 2.951 of the rules.

3.1 Radiated measurements shall be made at a distance of 30 meters.

3.2 The distance between the measuring set antenna and the vertical axis of the turntable supporting the EUT shall be set at 30 meters. The EUT shall be disposed on the turntable so that the center of radiation shall be as near as possible to the center of rotation.

3.3 When the equipment is installed at the test site, precautions must be taken with the layout of cables, etc., to ensure that spurious effects do not occur. When the EUT is mounted on a turntable, this shall be substanially non-metallic and its floor shall not be higher than 50 cm above ground level.

3.4 When the EUT is fitted with a special grounding terminal, this shall be connected to earth by a lead as short as possible. When no grounding terminal is provided, the EUT shall be tested as normally connected, that is, any grounding is obtained through the mains supply. When the EUT is supplied with a flexible power cable, as much of this as possible shall be on the ground.

*4.0 Measurement Instrumentation.*

4.1 Field strength measurements shall be made with a radio noise meter conforming to the American National Standard Specifications for Electromagnetic Interference and Field Strength Instrumentation 10 kHz to 1 GHz C63.2-1977.* Other instruments may be used for certain restricted or specialized measurements when correlation data is taken to establish the methods of conversion of data to that achieved with the C63.2 instrumentation.

*4.2* The radio noise meter shall be calibrated and checked frequently to assure its accuracy. Adjustments should be made and correction factors applied in accordance with instructions in the radio noise meter manufacturer's manual.

*4.3* The detector function selector of the meter shall be set to average. Where a correlation can be shown between average and some other detector function for a particular piece or class of equipment, that detector function may be used.

*4.4* The bandwidth selector switch shall be set in accordance with the following:

| Measurement Frequency Range | Required Bandwidth |
|---|---|
| 10-250 kHz | 1 kHz |
| 250 kHz-25 MHz | 10 kHz |
| 25 MHz-1 GHz | Between 100 kHz and 1 MHz |
| 1-10 GHz | 5 MHz |
| 10-40 GHz | As appropriate considering the signal characteristics of the EUT. |

Where these bandwidths cannot be used, another bandwidth may be used: *Provided,* The measured value is adjusted accordingly.

*4.5* A frequency counter can be used directly for frequency measurements on ISM equipment having good frequency stability and little or no modulation on their emissions. Where the EUT is unstable, has its frequency affected appreciably by load effects, is pulsed or heavily modulated, it is necessary to employ a spectrum analyzer to observe the frequency variations and use a tracking oscillator and frequency counter to measure the frequency of the equipment under the various test conditions.

*5.0 Measuring Antennae.*

*5.1 Frequency Range 10 kHz to 30 MHz.* Radiated measurements in this frequency range shall be made with an electrostatically shielded calibrated loop antenna. The aerial dimension shall be such that the antenna can be completely enclosed by a square having a side of 0.6 meters in length. When the antenna is connected, the overall bandwidth requirements for the system shall not exceed the limits of overall selectivity (pass band) specifications in the American National Standard C63.2 radio noise meter. The antenna shall be capable of being orientated so that all polarizations of the incident radiation may be measured. The height of the center of the antenna above ground shall be adjustable between heights of 1 to 4 meters. The balance of the antenna shall be such that, in a uniform field, the ratio between the maximum and minimum indications on the measuring instrument when the aerial is rotated shall be no less than 20 dB.

*5.2 Frequency range 30 MHz to 1000 MHz.* For this frequency range a calibrated resonant dipole shall be used. It shall be tuned and matched to the feeder by a suitable transforming device (balun).

*5.3 Frequency Range 1 GHz to 40 GHz.* For this frequency range, an appropriate linearly polarized horn antenna shall be used for each frequency measured. The antenna shall be capable of making separate measurements of the vertical and horizontal components of the radiated field.

*6.0 General Test Procedure.*

*6.1 Frequency Measurements.*

*6.1.1* For ISM equipment designed to operate on one of the seven ISM frequencies (see Section 18.100 of the proposed rules), the maximum frequency variation due to the load and normal operating conditions shall be measured and reported. These measurements may be performed indoors. The load effect on frequency variation is determined by finding the extreme values of frequency obtainable by combinations of applicators, applicator spacings, external control settings, and various loads.

*6.1.2* After a five-minute no-load warm-up from a cold start at room temperature (without applicators connected), determine the maximum deviations from the ISM frequency—both above and below—by making measurements with different combinations of applicators, applicator spacing, control settings, and load.

*6.1.3* Using that combination of applicators and load spacing which produces the maximum observable power output into the load, operate the equipment from a cold start at room temperature for a period of six hours (two hours for portable equipments, i.e., table models). Measure the frequency at the beginning of the run and every ½ hour until the period has expired.

*6.1.4* After making the last measurement, once again adjust the equipment's controls, vary the load, and change the applicator spacing, to find the combination that yields the worst deviation from the ISM frequency.

*6.2 Field Strength Measurements.*

*A draft copy of this standard, which is approved for publication, is available for $5.00 from Ms. Mary Goulding, Institute of Electrical and Electronic Engineers, 345 E. 47th St., New York, NY 10017. A $5.00 check or money order must accompany the order.

*6.2.1* Radiated measurements shall be made at a distance of 30 meters (except that emissions above 1 GHz shall be measured at 3 meters).

*6.2.2* On an approved test site, the EUT shall be placed on a rotatable test platform, fed with power and control circuits via underground cable. The turntable upon which the EUT is to be mounted shall be substantially non-metallic. Its surface shall be 50 cm above ground level. If the equipment is designed to be operated on a table, a wooden support shall be placed on the test platform such that the EUT sits on a surface 1 meter above ground, with the applicator leads (if any) fully extended in front of the equipment. If for practical reasons it is not feasible to use a rotatable platform, the EUT may be located in a fixed position, with the measurement installation moved around the equipment to locate and measure the maximum level of radiation.

*6.2.3* The EUT and load table are to be located on the platform so that they are symmetrical about the axis of rotation of the platform. The distance between the measuring set antenna and the vertical axis of the turntable supporting the EUT shall be set at 30 meters.

*6.2.4* When the EUT is fitted with a special grounding terminal, this shall be connected to earth ground by a lead as short as possible. When no grounding terminal is provided, the EUT shall be tested as normally connected; that is, any grounding is obtained through the mains supply. When the EUT is supplied with a flexible power cable, as much of this as possible shall be on the ground.

*6.2.5* It is useful to make initial measurements using a calibrated spectrum analyzer with a broadband antenna at 3 meters from the surface of the EUT, to determine those frequencies on which the equipment has the strongest emissions. This test should be made with all applicator combinations, both with and without load. From this initial investigation, frequencies shall be selected for final field strength tests. The frequencies chosen shall be that of the fundamental plus all these within 20 dB of the limits in Part 18, taking into account antenna and equipment calibrations and correction factors. The frequency range to be examined shall extend from the lowest frequency generated in the equipment to the thirtieth harmonic of the fundamental, or to 40 GHz, whichever is the lower.

*6.2.6* For each frequency having significant strength as determined in paragraph 6.2.5, measure the field strength for each applicator combination, both with and without load, rotating the platform to determine the orientation giving the maximum observable value. This must be done for both horizontal and vertical polarization of the receiving antenna.

*7.0 Special Test Conditions.* The following special conditions shall apply in addition to the general test procedure in Paragraph 7.

*7.1 Industrial equipment.* The load used when industrial equipment is tested may be either the load normally used in service or a suitable artificial load. Where means for connecting auxiliary services such as water, gas, air, etc. are provided, connection of these services to the EUT shall be made by insulating tubing not less than 3 meters long. When testing with the load used in service, the electrodes and cables shall be disposed in the manner of their normal use. Measurements shall be made at both maximum output power and at half-maximum output power. Equipment which will normally operate at zero or very low output shall also be tested in this condition.

During the measurement of field strength, the EUT together with its output cables, electrodes and load, whether a dummy load or that used in service, shall be rotated around its vertical axis in order to measure the maximum value of radiation.

If the equipment and its load are too large to be rotated, they may remain fixed and measurements shall be made at as many points around the equipment as are necessary to determine the direction of maximum radiation.

*8.0 Data Reporting Format.* Emission measurements for ISM equipment shall be reported in microvolts per meter (uV/m) measured at a distance of 30 meters for equipment operating below 1000 MHz and uV/m at 3 meters for equipment operating above 1000 MHz. The data shall be presented in tabular or graphical form showing levels measured versus frequency. Instrumentation, settings, EUT arrangement, and all other pertinent details shall be included along with the data.

## APPENDIX F

THIS IS A PROPOSED NEW BULLETIN OCE

This proposed bulletin is issued as a part of the Notice of Proposed Rule Making in FCC DOCKET 20718. Comments on this bulletin are solicited and should preferably be combined with those on the technical specifications proposed in this proceeding. Comments should clearly reference FCC DOCKET 20718 and should be submitted by May 1, 1979. Reply comments may be submitted by June 1, 1979. Federal Communications Commission, Office of the Chief Engineer, Washington, D.C. 20554.

6. It is proposed to revise and add Bulletin OCE 49 as a new Appendix F to 47 CFR Part 18 as follows:

### APPENDIX F-OCE 49 IN-SITU TEST PROCEDURE FOR ISM EQUIPMENT

*1.0 Introduction.* This bulletin describes the procedure for measuring radiated radio frequency emissions from Industrial, Scientific, and Medical (ISM) equipment that cannot be tested on a standard (approved) test site. ISM equipment that complys with the technical specifications in Part 18 of FCC rules may obtain ISM registration in accordance with the procedure in Subpart J of Part 2 of FCC rules (47 CFR Part 2 Subpart J). ISM registration applies only to the particular ISM equipment that was measured and reported to the Commission for that one location. ISM registration is not transferable to another similar equipment installed at a different location. Where the equipment is capable of being measured for compliance on an approved test site, the procedure described in Bulletin OCE-48 shall be used, unless the rules specified a different test procedure. Certification based on measurements on a standard test site is mandatory for: domestic microwave ovens, consumer ISM products, ultrasonic equipment with less than 500 watts output and medical ISM products. The procedure for measuring RF line conducted voltage is described in Bulletin OCE-47. Importation and marketing of all ISM equipment is subject to the provisions in Subparts K and I of Part 2, respectively.

*2.0 Characteristics To Be Measured.*

*2.1* Measurements shall be made of the operating frequency and all radiated emissions from 10 kHz up through the thirtieth harmonic of the fundamental emission of the equipment under test or up to 40 GHz, whichever comes first.

*2.2* For certain ISM equipment subject to *Section 18.108 (Note 2)*, the RF output power must also be measured and reported with the application for ISM registration.

*3.0 Location of Equipment.*

*3.1* Radiated measurements shall be made at a distance of 30 meters from the EUT. Alternatively, for buildings wholly under the control of the operator of the EUT, measurements may be made at a distance of 30 meters from the perimeter of the building in which the EUT is installed.

*4.0 Measurement Instrumentation.*

*4.1* Field strength measurements shall be made with a radio noise meter conforming to the specification of the American National Standard Specification For Electromagnetic Interference and Field Strength Instrumentation 10 kHz to 1 GHz C63.2-1977.* Another instrument may be used for certain restricted or specialized measurements when correlation data is taken to establish the methods of conversion of data to that achieved with the C63.2 instrumentation.

*4.2* The radio noise meter shall be calibrated and checked frequently enough to assure its accuracy. Adjustments should be made and correction factors applied in accordance with instructions in the radio noise meter manufacturer's manual.

*4.3* The detector function selector of the meter shall be set to average or quasi-peak. Where a correlation can be shown between average and some other detector function for a particular piece or class of equipment, that detector function may be used.

*4.4* The bandwidth selector switch shall be set in accordance with the following:

| Measurement Frequency Range | Required Bandwidth |
|---|---|
| 10-250 kHz | 1 kHz |
| 250 kHz-25 MHz | 10 kHz |
| 25 MHz-1 GHz | Between 100 kHz and 1 MHz |
| 1-10 GHz | 5 MHz |
| 10-40 GHz | As appropriate considering the signal characteristics of the EUT. |

Where these bandwidths cannot be used, another bandwidth may be used, provided the measured value is adjusted accordingly.

*4.5* A frequency counter can be used directly for frequency measurements on ISM equipment having good frequency stability and little or no modulation on their emissions. Where the EUT is unstable, has its frequency affected appreciably by load effects, is pulsed or heavily modulated, it may be necessary to employ a spectrum analyzer to observe the frequency variations and use a transfer oscillator and frequency counter to measure the frequency of the equipment under the various test conditions.

*A draft copy of this standard, which is approved for publication, is available for $5.00 from Ms. Mary Goulding, Institute of Electrical and Electronic Engineers, 345 E. 47th St., New York, NY 10017. A $5.00 check or money order must accompany the order.

*5.0 Frequency Measurements.*

*5.1* For ISM equipment designed to operate on one of the seven ISM frequencies (see § 18.100 of the proposed rules), the maximum frequency variation due to the load and normal operating conditions shall be measured and reported. The load effect on frequency variation is determined by finding the extreme values of frequency obtainable by adjustment of external controls, applicator spacing and varying loads, for each combination of applicators.

*5.2* After a five-minute no-load warm up from a cold start at room temperature for each combination of applicators (loading coils), determine the maximum and minimum frequency obtainable for very light load by variation of external controls and applicator spacing.

*5.3* Using that combination of applicators, load, and load spacing which produces the maximum observable power output into the load, operate the equipment from a cold start at room temperature for a period of six hours (two hours for portable equipments, i.e., table models). Measure the frequency at the beginning of the run and at frequent intervals until its completion.

*5.4* After the run described in paragraph 5.3 immediately repeat the observations described in paragraph 5.2 for all applicators.

*6.0* Measuring Antennae.

*6.1 Frequency Range 10 kHz To 30 MHz.* Radiated measurements in this frequency range shall be made with an electrically-screened loop antenna. The aerial dimension shall be such that the antenna can be completely enclosed by a square having a side of 0.6 meters in length. When the antenna is connected, the overall bandwidth requirements for the system shall not exceed the limits of overall selectivity (pass band) specifications in the American National Standard C63.2 radio noise meter. The antenna shall be orientable so that all polarizations of incident radiation may be measured. The height of the center of the antenna above ground shall be adjustable between heights of 1 to 4 meters. The balance of the antenna shall be such that, in a uniform field, the ratio between the maximum and minimum indications on the measuring instrument when the aerial is rotated shall be no less than 20 dB.

*6.2 Frequency Range 30 MHz To 1000 MHZ.* For this frequency range a calibrated dipole shall be used. The antenna shall be tuned and matched to the feeder by a suitable transforming device (balun).

*6.3 Frequency Range 1 GHz To 40 GHz.* For this frequency range, an appropriate linearly polarized horn antenna shall be used for each frequency measured. The antenna shall be capable of making separate measurements of the vertical and horizontal components of the radiated field.

*7.0 General Test Procedure.*

*7.1* It is useful to make initial measurements using a calibrated spectrum analyzer with a broadband antenna within about 10 feet of the EUT, to determine those frequencies on which the equipment has the strongest emissions. This test should be made with all applicator combinations, both with and without load. The frequencies selected from this test should include all of those within 20 dB of the strongest emission observed in the series, taking into account the calibration of the antenna(s) and equipment used. The frequency range examined should extend from the lowest frequency generated in the equipment to the thirtieth harmonic of the fundamental operating frequency of the EUT or 40 GHz, whichever comes first.

*7.2* The load used when industrial equipment is tested may be either the load used in service or an equivalent device. Where means for connecting auxiliary services such as water, gas, air, etc., are provided, connection of these services to the equipment under test shall be made by insulating tubing not less than 3 m long. When testing with the load used in service, the electrodes and cables shall be disposed in the manner of their normal use. Measurements shall be made at both maximum output power and at half-maximum output power. Equipment which will normally operate at zero or very low output shall also be tested in this condition. Measurements shall be made at as many points around the equipment as are necessary to determine the direction of maximum radiation.

*8.0 Data Reporting Format.* Emission measurements for ISM equipment shall be reported in microvolts per meter ($\mu$V/m) measured at a distance of 30 meters for equipment building perimeter operating below 1000 MHz and $\mu$V/m at 3 meters for equipment operation above 1000 MHz. The data shall be presented in tabular or graphical form showing levels measured versus frequency. Instrumentation, settings, EUT arrangement, and all other pertinent details shall be included along with the data.

[FR Doc. 79-4792 Filed 2-14-79; 8:45 am]

---

[6712-01-M]

[47 CFR Part 83]

[SS Docket No. 79-3; RM-2997; FCC 79-6]

## SEPARATION OF HANDHELD PILOT RADIO EQUIPMENT FROM SHIP STATION EQUIPMENT

### Removal of Requirements

AGENCY: Federal Communications Commission.

ACTION: Proposed Rule Making.

SUMMARY: We proposed amendment of Part 83 to remove requirements that pilots who guide vessels through congested waters configure their VHF units to maintain a certain number of channels and a watch on Channel 16. The amendment was recommended by the U.S. Coast Guard and supported by a number of pilots' associations.

DATES: Comments must be received on or before March 22, 1979, and Reply Comments must be received on or before April 2, 1979.

ADDRESSES: Federal Communications Commission, Washington, D.C. 20554.

FOR FURTHER INFORMATION CONTACT:

Penny Wells, Safety and Special Radio Services Bureau (202) 632-7197.

SUPPLEMENTARY INFORMATION:

Adopted: January 8, 1979,

Released: February 12, 1979.

In the matter of amendment of Part 83 of the rules to provide separation of handheld pilot radio equipment from ship station equipment, SS Docket No. 79-3, Rm 2997.

1. By this Notice, the Commission proposes to amend §§ 83.106 and 83.224 of our rules to distinguish handheld VHF radio equipment operated by a pilot temporarily on board a vessel from other radio equipment operated on a vessel. We have also made editorial changes in the two rule sections which will help to clarify their meanings.

2. Section 83.106(b) sets out a minimum of three frequencies on which VHF radiotelephone-equipped ship stations must be able to transmit and receive. Section 83.224 requires each VHF ship station to maintain a watch on the distress, safety and calling frequency 156.8 MHz (Channel 16). A narrow exception to the requirements of these rules is included for "walkie talkies" ("single or dual channel equipment") when they are used solely for bridge-to-bridge communications on vessels which have no other requirements for VHF communications. Generally, this handheld equipment is used by a pilot brought on board to maneuver a vessel through complicated or congested waters. The Coast Guard has requested amendment of these rules.

3. The Coast Guard request was supported by a number of pilots' associations. [1]

4. Thus, as the rules now stand, in the majority of situations, pilots must be able to transmit and receive on three channels and must maintain a watch on Channel 16. The pilots contend that these requirements are unnecessary because usually the main

---

[1] These groups brought to our attention some confusion that exists about the scope of the exemption for handheld transceivers. First of all, the pilots see no reason to distinguish single and dual channel equipment from the multi-channel equipment favored by some pilots as long as the equipment is used solely for navigational communications from the ship's bridge. The pilots argue that all handheld VHF transceivers used only for bridge-to-bridge communications should be exempt from the channeling and watch requirements. Secondly, as the rules currently read, the channeling and watch exemptions apply only to pilots' equipment when used on vessels which "have no requirement for other VHF communications." Generally, such vessels are foreign flag ships not subject to the U.S. laws which require a VHF a radiotelephone capability.

Statements in support of this proposed amendment have been received from the Associated Branch Pilots, the American Waterways Operators, Inc., and the Central Committee on Telecommunications of the American Petroleum Institute.

ship station installation will comply with the rules.[2]

5. We agree with the arguments of the Coast Guard and the pilot's associations. Therefore, we are proposing to amend our rules to provide that when a ship has more than one VHF radiotelephone station aboard, only one station must comply with the channeling and watch requirements. In addition we are eliminating the qualification of "single or dual channel VHF equipment" which is currently exempt from channeling and watch requirements no ships which have on other requirement for VHF communications. We are permitting an exemption for "handheld" equipment instead.

6. As part of an ongoing effort to simplify and clarify our rules, we have made editorial changes to § 83.106(a) of our rules. No substantive change in that paragraph is intended.

7. The proposed amendments to the Commission's rules as set forth below are issued pursuant to the authority contained in Sections 4(i) and 303(c) and (r) of the Communications Act of 1934, as amended.

8. Pursuant to applicable procedures set forth in § 1.415 of the Commission's rules, interested persons may file comments on or before March 22, 1979, and reply comments on or before April 2, 1979. All relevant and timely comments and reply comments will be considered by the Commission before final action is taken in this proceeding. In reaching its decision, the Commission may take into consideration information and ideas not contained in the comments: *Provided*, That such information or a writing indicating the nature and source of such information is placed in the public file: *And provided*, That the fact of the Commission's reliance on such information is noted in the Report and Order.

9. In accordance with the provisions of § 1.419 of the Commission's rules, an original and 5 copies of all statements, briefs or comments filed shall be furnished to the Commission. Responses will be available for public inspection during regular business hours in the Commission's Public Reference Room at its headquarters in Washington, D.C.

10. Regarding questions on matters covered in this document contact Penelope A. Wells, telephone (202) 632-7197.

FEDERAL COMMUNICATIONS COMMISSION,
WILLIAM J. TRICARICO,
*Secretary.*

Part 83 of Chapter I of Title 47 of the Code of Federal Regulations is amended as follows:

Part 83—Stations on Shipboard in the Maritime Services.

1. Section 83.106 is amended to read as follows:

§ 83.106 Required frequencies for radiotelephony.

(a) Except as provided in paragraph (b) of this section, each ship radiotelephone station licensed to operate in the band 1605-3500 kHz shall be able to transmit and receive on 2182 kHz. If the station is used for other than safety communications, it shall also be capable of receiving and transmitting on two other frequencies in that band.

(b) Ship stations on vessels operating exclusively on the Mississippi River and its connecting waterways which operate on high frequency bands above 3500 kHz, as well as on the medium frequency bands may be equipped with only one other frequency in the 1605—3500 kHz band in addition to 2182 kHz. Additional frequencies are permitted when desired.

(c) Except as provided in paragraph (d) of this section, each VHF radiotelephone ship station, or if more than one VHF radiotelephone ship station is being operated from a vessel, then at least one station, shall be able to transmit and receive on the following frequencies:

(1) The distress, safety and calling frequency 156.800 MHz;

(2) The primary intership safety frequency 156.200 MHz;

(3) One or more working frequencies; and

(4) All other frequencies necessary for its service.

(d) Where a ship ordinarily has no requirement for VHF communications, handheld VHF equipment may be used solely for navigational communications to comply with the bridge-to-bridge requirements contained in Subpart X.

2. Section 83.224 is amended to read as follows:

§ 83.224 Watch on 156.8 MHz.

Each VHF ship station, or if more than one VHF ship station is being operated from a vessel (for example, if a pilot is operating his radio equipment onboard the vessel), then at least one station licensed to transmit by telephony, shall, during its hours of service maintain a watch on the frequency 156.8 MHz whenever such station is not being used for exchanging communications. The watch is not required:

(a) Where a ship station is operating only with handheld bridge-to-bridge VHF radio equipment under § 83.106(d); or

* * * * *

[FR Doc. 79-4944 Filed 2-14-79; 8:45 am]

[2]They also point out that because handheld transceivers are incapable of monitoring more than one channel, the Channel 16 watch requirement is impracticable and impinges on their work. The rules are unduly burdensome, they argue, and result in unwarranted duplication of effort.

Even foreign vessels often have a VHF radiotelephone capability. See "Supporting Statement of the Central Committee on Telecommunications of the American Petroleum Institute," p. 3. para. 4.

[4910-59-M]

## DEPARTMENT OF TRANSPORTATION

National Highway Traffic Safety Administration

[49 CFR Part 571]

[Docket No. 79-03; Notice 01; NHTSA 4910-59]

### AIR BRAKE SYSTEMS

AGENCY: National Highway Traffic Safety Administration (NHTSA).

ACTION: Advance Notice of Proposed Rulemaking and invitation for applications for financial assistance in the preparation of comments.

SUMMARY: This notice solicits the views of all interested persons on steps to be taken regarding a new Air Brake Standard No. 130 for trucks, buses, and trailers to replace Air Brake Standard No. 121 in its present form. A separate notice will address longer-range issues of braking technology such as automatic brake adjusters, and other means to improve vehicle stability, including antilock systems. This notice follows a court decision on Standard No. 121 and is intended to lead to resolution of the issues raised by that decision.

DATES: Comments must be received on or before April 16, 1979.

Applications for financial assistance to participate in this proceeding should be submitted no later than March 7, 1979.

ADDRESSES: Comments should refer to the docket number and be submitted to: Room 5108, Nassif Building, 400 Seventh Street, S.W., Washington, D.C. 20590.

Applications for financial assistance should be submitted in writing to: Ms. Jeannette Feldman, Public Affairs and Consumer Participation, National Highway Traffic Safety Administration, Room 5232, 400 Seventh Street, S.W., Washington, D.C. 20590, 202-426-0670.

FOR FURTHER INFORMATION CONTACT:

Mr. Duane Perrin, Office of Vehicle Safety Standards, National Highway Traffic Safety Administration, Washington, D.C. 20590 (202) 426-2153.

SUPPLEMENTARY INFORMATION:

BACKGROUND

Standard No. 121 (49 CFR 571.121) regulates the braking system performance of air-braked trucks, buses, and trailers. The standard has been in

effect for trailers since January 1, 1975, and for trucks and buses since March 1, 1975. Requirements were established for the service, emergency, and parking brake systems of these vehicles.

In January 1975 a petition was filed for review of the standard's promulgation which resulted in invalidation of two major requirements of the standard—that vehicles stop in specified distances and that the wheels not lock uncontrollably during these stops (*PACCAR v. National Highway Traffic Safety Administration and Department of Transportation*, 573 F2d 632 (9th Cir. 1978); cert. denied——U.S.——(October 2, 1978) 41 U.S.L.W. 3910 (Sup. Ct.). The adequacy of certain test procedures and the responsibility of manufacturers to certify compliance with the standard were also addressed by the Ninth Circuit's ruling. The NHTSA's interpretation of the court's three holdings was published in the FEDERAL REGISTER (43 FR 39390; September 5, 1978) (43 FR 48646; October 19, 1978).

Several issues have arisen regarding the air brake standard as a result of the court's invalidation of 60-mph stopping distances for trucks and the "no lockup" requirement for trucks and trailers. Most important are the status of those vehicles on the road already built to comply with the standard prior to the court's ruling, and the status of those vehicles being produced to comply with the standard as modified. The latter issue includes air-braked buses, which were not treated by the Ninth Circuit ruling.

A separate important issue is what future air brake proceedings might be justified. In this regard, comment is solicited on any of the remaining provisions in Standard No. 121 that should become part of a new Air Brake Standard No. 130. The purpose of this notice is to address these and all related issues in order to resolve them with the benefit of comment from all interested persons.

### VEHICLES PRODUCED OR IN SERVICE BEFORE COURT ACTION

Manufacturers, dealers, and users asked whether the court invalidated the "no lockup" and 60-mph stopping distance only as of its October 11th entry of mandate, or whether the court found the requirements invalid back to their January and March 1975 implementation dates. The NHTSA interprets the Ninth Circuit ruling to invalidate these requirements from the effective dates of the standard for affected vehicle types. Thus, the NHTSA does not believe that a vehicle which lacks "no lockup" performance or the specified 60-mph stopping distance capability would be in noncompliance with the existing standard.

A second question was whether a commercial facility (manufacturer, distributor, dealer, or repair business) which is normally prohibited from disconnection or removal of safety systems by § 108(a)(2)(A) of the National Traffic and Motor Vehicle Safety Act (the Act) (15 U.S.C. § 1397(a)(2)(A) is prohibited from disconnection in this case.

The NHTSA has stated it does not consider it to be a violation of § 108(a)(2)(A) for a commercial facility to safely disconnect an antilock system installed in connection with the existing standard or to provide instructions on how it can safely be disconnected. Any modification must be undertaken in conformity with any other relevant regulations and should only be done after consulting with the manufacturer about the safest configuration of the particular vehicle.

There is apparently some misunderstanding about the status of antilock systems on vehicles in use. The agency has received several inquiries from trucking companies asking if they are required to disconnect their antilock systems.

The NHTSA recommends that antilock systems on existing vehicles be maintained in proper working condition, in order to achieve the benefits for which the systems were designed. If a truck operator decides to disconnect an antilock system, the NHTSA recommends that he do so only after consultation with the vehicle manufacturer. Users are not required to disconnect antilock systems on vehicles in use, and may order antilock according to their choice on new vehicles.

A related issue is whether the combination of brake characteristics found in a 121-equipped vehicle after "no lockup" and 60-mph stopping capability are modified or eliminated constitute the most satisfactory configuration. Because of the diversity of vehicle configurations, no general statement on this issue can be made. The NHTSA recommends that truck operators consult with their respective vehicle manufacturers before attempting disconnection of antilock systems on their vehicles. In this regard, the agency hereby requests information to the extent it has not already been provided on manufacturers' recommendations to distributors, dealers, and operators of its products as to the advisability and proper means for disconnection of antilock systems and modification of foundation brake components, including any bulletins to dealers on this subject.

A question raised was whether Canadian-built (or U.S. built-for-export) trucks and trailers which comply with the Canadian air brake standard can now be imported since certain portions of the U.S. standard were invalidated. The Canadian standard came into effect later than the U.S. standard and it differed in not having a "no lockup," stopping distance, timing or dynamometer requirement. Thus, there may be differences remaining between vehicles built for U.S. service and those built for Canadian service.

The agency found that operation of uncertified vehicles in the United States constitutes an importation in violation of § 108(a)(1)(A) of the Act if built after the applicable effective date of Standard No. 121. The invalidation of some of the differences between the U.S. and Canadian standard does not completely eliminate the disparity of required performance between the two groups of vehicles. This applies both to vehicles in service and to newly manufactured vehicles that do not comply with the present standard.

Some persons have urged the NHTSA to make a finding that all vehicles built to conform to the invalidated requirements contain a safety-related defect that justifies their recall. The NHTSA has conducted a vigorous campaign to insure that all defects that might arise in components installed to meet the standard are recalled and fixed before they cause any damage. This program has not uncovered evidence that the componentry installed contains inherent problems that create a hazard to the public. If it had, the agency would have taken action to recall all componentry earlier.

One concern expressed in this regard is that the air modulator valves used in antilock systems are more complex than the so-called standard relay valve, and that safety consequences can arise more easily in the more complex internal construction. The agency has encountered cases where valve problems arose in the change from the standard relay valve to a new design. In all but one case, however, it was factors such as start-up problems that created the difficulty, as in the case of incorrect gasket sealer in a ratio relay valve. In some cases, use of improper antifreeze solution caused swelling of internal parts in an antilock modulator valve. The problems were limited and were resolved through the existing defects reporting mechanism established by §§ 150 through 159 of the Act. For this reason, it is not desirable or necessary to recall all vehicles in service equipped with antilock modulator valves.

The public is requested to provide any information to the NHTSA it may have that bears on the subject of possible inherent defects in past Standard No. 121 designs that would justify their recall. Comments may be made to this docket, but it is requested that any such evidence also be provided as

soon as possible by letter addressed to the Director, Office of Defects Investigations, NHTSA, 400 7th Street SW., Washington, D.C. 20590. The comments should be specific, with compete description of the problem, vehicle manufacturer, identification number (VIN), and antilock system manufacturer.

VEHICLES PRESENTLY BEING PRODUCED TO MEET THE STANDARD

Although the court invalidated major requirements of the standard, air brake requirements remain in effect for trucks and trailers until the new Standard No. 130 is implemented, as follows:

(1) Twenty-mph service brake stopping distances on wet and dry surfaces;

(2) Twenty-mph emergency brake stopping distance on a dry surface;

(3) Stability requirement of remaining within a 12-foot-wide lane while stopping;

(4) Parking brake performance;

(5) Brake activation and release timing;

(6) Brake retardation force requirements for trailers;

(7) High temperature brake fade and recovery performance;

(8) Air compressor capacity;

(9) Air reservoir volume;

(10) Reservoir integrity;

(11) Reservoir pressure protection;

(12) Condensate draining provisions;

(13) Pressure gauges;

(14) Low air pressure warning signal;

(15) Stop lamp activation;

(16) Standardized emergency brake controls; and

(17) Three antilock system failure, warning signal and power source requirements, if the manufacturer chooses to install antilock systems.

It has been recommended by some parties that these requirements be suspended or abolished in their entirety. The primary reason given for abolition of the entire standard is concern that the systems were designed as a whole and that meeting only the remaining requirements is not safe in the absence of all performance formerly required. The agency believes that the key issue is whether the most satisfactory combination of stability characteristics is achieved under the present requirements. The agency has solicited views on the subject from the manufacturers, including PACCAR which testified on this issue and the general question of optimized performance. Only one technical issue has been raised with the NHTSA engineering staff to date by PACCAR engineers.

In the case of an 18,000-pound or larger front axle supplied on some trucks (mostly very heavy dump trucks and concrete mixers), the vehicle configuration and unladen weight characteristics are such that this axle can lock during full braking in the unloaded condition, despite the presence of an automatic pressure limiting valve. While the company can meet the standard without this antilock installation, it is PACCAR's engineering judgment that the wheel lockup presents enough of a safety problem that the company continues to supply antilock on this axle although it believes the Ninth Circuit court ruling in fact relieves it of this obligation. Compliance with the dynamometer requirements of S5.4 necessitates the installation of relatively high torque brakes on these axles. PACCAR plans to request confirmation of its interpretation of the Ninth Circuit ruling on this issue that the dynamometer requirements would not have to be met for these vehicles. PACCAR has detected no similar problems on their high-production vehicles.

With regard to this specific issue or any other area of technical concern about the existing requirements of the air brake standard, the NHTSA by means of this notice solicits views and recommendations from any interested person. As for the most important issue of optimization of the stability and handling of vehicles in new production, the agency requests data and views on—

(1) Recommendations for changes of the existing requirements to be incorporated in the new standard for optimization of handling and stability including specifics about various models and configurations; and

(2) Any models for which the manufacturer continues to provide antilock systems as standard equipment because of concern about stability considerations.

It is noted that the NHTSA has informally requested such data from manufacturers on several occasions, most particularly in the meetings that followed effectuation of the Ninth Circuit mandate the week of October 16th, and during a meeting with the Motor Vehicle Manufacturers Association in Fort Wayne, Indiana on November 6th. Responses to date from International Harvester, White, Ford, and PACCAR Corporation have been general in tone, with some more specific views and information from Freightliner Corporation.

FUTURE PROCEEDINGS ON THE AIR BRAKE STANDARD

Future proceedings on a new standard to replace the existing one would be desirable from several perspectives. Manufacturers of both brake components and vehicles are entitled to know what would be required in the future standard. The agency wishes to maintain the technological gains in braking performance that have been established over the past eight years, consistent with the findings of the Ninth Circuit ruling. All of the travelling public have a stake in the future of braking advancements such as antilock, load proportioning valves, and automatic brake adjusters.

It is the agency's tentative view that the most constructive approach would be to pursue separate initiatives that distinguish between basic braking systems and the more advanced concepts such as automatic adjusters and antilock or other vehicle stability systems. In this way, the generally supported concept of preserving the accepted technological gains in air brakes made since the existing standard's issuance will not be confused with more controversial technological advances.

Thus, the NHTSA intends to publish a second Advance Notice of Proposed Rulemaking (ANPRM) in the near future that will raise these issues of braking and stability advancement. The purpose of this notice will be to separately raise the pros and cons of possible long-term courses of action that may merit future consideration by the agency.

Apart from those issues, this notice solicits, views and recommendations on the consolidation of gains that have been achieved in truck and trailer braking during the eight years since the existing standard was first issued. Given that the requirements of the existing standard have been addressed in the preceding section of this notice, this section addresses the additions to the existing standard that should be considered, along with my deletions or modifications of the requirements that should accompany them.

The most important issue that remains outstanding is whether a 60-mph stopping distance should be reinstated in place of that invalidated by the Ninth Circuit for trucks, in order to prevent depowering of brakes and to address the problem of the very long stopping distances of vehicles such as non-antilock-equipped truck-tractors operating without trailers. Consistent with the court's holding, any such stopping distance would have to be achievable by technological means that do not create any hazard to the public, and a finding to that effect would be made. Quite apart from any legalities, any new stopping distance would have to take into account the present capabilities of vehicles already produced and presently being produced, standards in effect in other countries, and the interplay between dynamometer and stopping distance requirements. The agency must also determine whether or not any new requirements should also apply to school buses which are now temporarily excluded from any stopping distance requirement.

The goal is to establish minimum stopping distances for all air-braked vehicles that do not compromise optimized design for the various configurations of vehicle that would be required to conform to it. It has been pointed out by International Harvestor, for example, that a 60-mph stopping distance appropriate for almost any configuration might still be difficult to meet with complete stability in the case of the unloaded truck-tractor. This might justify a separate service brake stopping distance for this condition of loading, such as is specified for emergency brake stops. Alternatively, a brake system design that reduces the effectiveness of the rear brakes of a lightly-loaded vehicle may be necessary. With such considerations in mind, the NHTSA requests brake test data accumulated to date that demonstrate the minimum stopping distances achievable by a manufacturer's products from 60 mph, while staying within 12-foot-wide lane but with wheel lockup allowed, including the configuration being tested, distances achieved in the fully-loaded and lightly-loaded conditions, and test conditions such as the skid number of the test surface.

The NHTSA intends to pursue simplification of the parking brake requirements, which was proposed in a notice published September 14, 1978 (43 FR 41056). The agency intends to propose such changes in the new standard, based on comments already received. Other changes would be of a minor nature, including the interpretive language which would have applied to an amended standard. However, any suggestions by commenters on other desirable changes in the air brake standard are invited.

Recent findings about the truck braking problem, including the study by the Highway Safety Research Institute of the University of Michigan, will be considered in developing our analysis, to the degree that the preliminary data permit.

To assist what is essentially a technical dialogue on the issues raised in this section, the NHTSA intends to dedicate part or all of its third public technical meeting in Ann Arbor, Michigan, to the subject of the new air brake standard initiatives. That meeting is scheduled for February 21, 1979, and details on its format and timing appear in the FEDERAL REGISTER (43 Fr 60691; December 28, 1978).

### CANCELLATION OF TRAILER "NO LOCKUP" PROPOSAL

The NHTSA hereby terminates its March 1978 proposal to suspend the "no lockup" requirements in the case of trailers subject to the standard (43 FR 9626; March 9, 1978). Because the "no lockup" provision of the standard has been invalidated for trailers by the Ninth Circuit decision, the proposal is no longer relevant. The agency will, however, continue preparations for joining industry-government antilock testing as discussed in that notice. The subject of the demonstration will be addressed in more detail in the separate ANPRM on braking advancement discussed above.

### APPLICATIONS FOR FINANCIAL ASSISTANCE

NHTSA invites all qualified individuals and organizations financially unable to participate in this proceeding to apply for financial assistance. All applications submitted before the deadline specified at the beginning of this notice will be examined by an evaluation board, composed of NHTSA and other Department of Transporation officials, to determine whether each applicant is eligible to receive funding. Consideration of late applications is at the discretion of the evaluation board.

In general, an applicant is eligible if its participation would contribute substantially to a full and fair determination of the issues involved in the proceeding, taking into consideration the novelty, complexity, and significance of the ideas advanced and the ability of the applicant to represent the interests it expouses competently. Additionally it must be demonstrated that the applicant does not have sufficient resources available to participate effectively in the proceeding in the absence of an award under this program.

If more than one applicant representing the same or similar interest is deemed eligible, the board will either select the applicant which can make the strongest presentation or select more than one applicant if justified. Compensation is to the extent the agency's budget for this purpose will permit. Payment is made as soon as possible after the selected applicant has completed its work and submitted a claim, but not later than 60 days after a completed claim is submitted.

Each applicant should specify in its application which rulemaking actions and issues it proposes to address if its application for funding is approved, and the nature of its proposed work product. Applicants must submit as part of their application all information required by section 5.49 of the recently revised DOT regulations governing this financial assistance program (44 FR 4675; January 23, 1979). Failure to submit the required information may result in delays in evaluation and possible disqualification of the application.

Interested persons are invited to submit comments on the notice. It is requested but not required that 10 copies be submitted.

In the case of comments that contain materials for which confidential treatment is requested, those materials should be deleted from the copies submitted to the docket. A copy of the complete comments should be submitted to the Office of Chief Counsel at the above address, with an indication of which portions of the comments are the subject of the request for confidentiality.

All comments received before the close of business on the comment closing date indicated above will be considered, and will be available for examination in the docket at the above address both before and after that date. To the extent possible, comments filed after the closing date will also be considered. However, the rulemaking action may proceed at any time after that date, and comments received after the closing date and too late for consideration in regard to the action will be treated as suggestions for future rulemaking. The NHTSA will continue to file relevant material as it becomes available in the docket after the closing date, and it is recommended that interested persons continue to examine the docket for new material.

The program official and lawyer principally responsible for the development of this document are Duane Perrin and Ted Herlihy, respectively.

(Sec. 103, 119, Pub. L. 89-563, 80 Stat. 718 (15 U.S.C. 3192, 1407); delegation of authority at 49 CFR 1.50 and 501.8).

Issued on February 12, 1979.

MICHAEL FINKELSTEIN,
*Associate Administrator for Rulemaking.*

[FR Doc. 79-5002 Filed 2-14-79; 8:45 am]

# notices

This section of the FEDERAL REGISTER contains documents other than rules or proposed rules that are applicable to the public. Notices of hearings and investigations, committee meetings, agency decisions and rulings, delegations of authority, filing of petitions and applications and agency statements of organization and functions are examples of documents appearing in this section.

[6320-01-M]

## CIVIL AERONAUTICS BOARD

[Order 79-2-55; Docket 33902]

### AIR HAITI, S.A.

#### Statement of Tentative Findings and Conclusions and Order To Show Cause

Adopted by the Civil Aeronautics Board at its Office in Washington, D.C. on the 7th day of February, 1979.

Application of Air Haiti, S.A., for an amended foreign air carrier permit pursuant to section 402 of the Federal Aviation Act of 1958, as amended.

Air Haiti, S.A. is the holder of a foreign air carrier permit authorizing it to engage in foreign air transportation of property and mail (1) between a point or points in Haiti, an intermediate point or points in the Bahamas, and the terminal point Miami, Florida; and (2) between a point or points in Haiti and the terminal point San Juan, Puerto Rico. The carrier is also authorized to operate charter trips in foreign air transportation, subject to the terms, conditions and limitations prescribed by Part 212 of the Board's Economic Regulations.[1]

#### BACKGROUND

By application filed October 19, 1978, Air Haiti requests amendment of its permit to authorize foreign air transportation of persons, property and mail as follows:

1. Between a point or points in Haiti, and intermediate point or points in the Bahamas, and the terminal point Miami, Florida;

2. Between a point or points in Haiti, an intermediate point or points in the Dominican Republic, and the terminal point San Juan, Puerto Rico; and

3. Beteen a point or points in Haiti and the terminal point New York, New York.

On November 20, 1978, Air Haiti filed a petition for the use of show cause procedures, stating its permit should be amended without an oral evidentiary hearing. No answers to Air Haiti's application or petition have been filed.

#### OWNERSHIP AND CONTROL

The applicant is a joint-stock corporation organized under the Haitian Law on August 28, 1960,[2] concerning Joint Stock Companies. The Government of Haiti holds 58 percent of the stock; 2 percent is held by a citizen of Haiti (the Secretary of the company), and 40 percent by a U.S. citizen, Mr. Craig K. Williams, who is Executive Vice-President and a Director of Air Haiti. Three of the six officers of the company are nationals of Haiti; three are citizens of the United States. Three of the five directors are Haitians. The remaining two are Americans.

Because 40 percent of Air Haiti's stock is held by a U.S. citizen occupying a high managerial position in the company, doubts exist as to whether effective control of Air Haiti is in Haitian hands. The Haitian Government does, however, have majority ownership, and nothing on the record indicates that its investment is not genuine. The U.S. paritcpant is not a person otherwise engaged in the business of aviation. Furthermore, Haiti is a friendly and developing country offering reciprocal rights to U.S. carriers. In such circumstances we find that it is in the public interest to waive our traditional ownership and control policy.[3]

#### FINANCIAL AND OPERATING FITNESS

The applicant reports that its capital structure is unchanged from the time its permit was renewed and amended in 1976. As of September 30, 1978, Air Haiti's balance sheet shows current assets of $708,352 and current liabilities of $277,104.4.[4] The carrier states that it is current in the payment of its financial obligations; that it has no financial relationship with any other air carrier; and that it has not been refused insurance or debt financing by a financial institution.

Air Haiti plans to acquire two Boeing 727-100 aircraft early in 1979 to carry passengers, property, and mail on a scheduled basis. The 727's under consideration could operate with 109 tourist seats plus 4,000 pounds of cargo, or 65 passenger seats with 9,000 pounds of cargo, or 40,000 pounds in all-cargo configuration. The applicant now has five Super Curtiss C-46 aircraft, one of which is dry-leased. It plans to continue to operate four daily round trip, all-cargo, scheduled flights between Haiti and Miami and one daily round trip, all-cargo, scheduled flight between Haiti and San Juan, with extra sections to be operated as required. It plans to operate one daily round trip passenger flight between Haiti and New York (JFK) and one daily round trip passenger flight between Haiti and Miami on a scheduled basis. Air Haiti has had no tariff or safety violations or accidents since the latest renewal/amendment of its permit.[5]

#### PUBLIC INTEREST

In support of its application, Air Haiti states that the grant of the requested authority would be in the public interest, that the Haitian Government authorizes operations by U.S. carriers[6] to and from Haiti, carrying passengers, property or mail, and that amendment of its permit should be granted on the basis of comity and reciprocity. There is no bilateral air transport agreement between the United States and Haiti.

---

[1] Air Haiti was issued an initial foreign air carrier permit in Order 71-5-49, approved May 6, 1971 (Docket 22577) for a five-year period. At that time the Board deferred action on that portion of the application seeking authority to serve New York and to carry passengers in the Haiti-Miami and Haiti-San Juan markets. An amended permit was issued in Order 72-11-117, approved November 24, 1972, authorizing Air Haiti to engage in foreign air transportation of property and mail on the routes outlined above in (1) and (2) as well as between a point or points in Haiti and the terminal point New York, New York effective through May 6, 1976. Following a public hearing on Air Haiti's application for renewal, its permit was renewed once again for a period of five years. However, its authority to serve New York was deleted because of non-use of the route and lack of aircraft to operate it (Order 76-11-23, approved November 3, 1976).

[2] Air Haiti was incorporated under the laws of the Republic of Haiti—see Articles of incorporation published in *Le Moniteur*, the official journal of the Republic of Haiti, period ending January 19, 1970. A publication of September 10, 1973 records changes in capital structure, ownership and management (see exhibit 14, pp. 7-9 of Air Haiti's petition to show cause).

[3] See Air Jamaica, 44 CAB 169, 171 (1966).

[4] See exhibit 4 of petition for show cause.

[5] FAA records show a minor violation of its flight operations specifications in April 1974 (FAR 129.11(a)). Air Haiti settled the matter to FAA's satisfaction by payment of a small fine.

[6] Pan American and Eastern operate daily round trip passenger service between Miami and Port-au-Prince; Eastern operates daily round trip passenger flights between Haiti and San Juan; and American provides six weekly round trip Port-au-Prince-New York flights. Source: *Official Airline Guide*, January 15, 1979.

Air Haiti discontinued scheduled flights between Haiti and New York in 1974 after about 18 months of operation because the service proved to be uneconomical and because the route was also being served by American Airlines. In addition, Air Haiti lacked suitable aircraft to operate the route. The carrier now believes that potential traffic between Port-au-Prince and New York can support a viable operation by Air Haiti.

In view of the foregoing and all the facts of record, we tentatively find and conclude that:

1. It is in the public interest to issue a renewed and amended foreign air carrier permit to Air Haiti, S.A. for a period of five years in the specimen form attached;

2. The public interest requires that the exercise of the privileges granted by the permit shall be subject to the terms, conditions, and limitations contained in the specimen permit attached to this order, and to such other reasonable terms, conditions, and limitations as may be prescribed by the Board;

3. Air Haiti, is fit, willing and able properly to perform the transportation described in the specimen permit, and to conform to the provisions of the Federal Aviation Act of 1958, as amended, and the rules, regulations, and requirements of the Board;

4. The public interest does not require an oral evidentiary hearing on the application; [7]

5. The amendment of Air Haiti's foreign air carrier permit would not constitute a "major Federal action significantly affecting the quality of the human environment" within the meaning of section 102(2)(C) of the National Environmental Policy Act of 1969 and will not constitute a "major regulatory action" under the Energy Policy and Conservation Act of 1975, as defined in section 313.4(a)(1) of the Board's Regulations; [8] and

6. Except to the extent granted, the application of Air Haiti, S.A. in Docket 33902 should be denied.

*Accordingly,* 1. We direct all interested persons to show cause why the Board should not (1) make final its tentative findings and conclusions, and (2) subject to the disapproval of the President, issue an amended foreign air carrier permit to Air Haiti, S.A. in the specimen form attached;

2. Any interested person having objection to the issuance of an order making final the Board's tentative findings and conclusions and issuing the amended permit shall file with the Board and serve on the persons named in paragraph 5, no later than March 6, 1979, a statement of objections specifying the parts objected to, and include a summary of testimony, statistical data, and concrete evidence to be relied upon in support of the objections. If an oral evidentiary hearing is requested, the objector should state in detail why such hearing is considered necessary and what relevant and material facts the objector would expect to establish through such hearing which cannot be established in written pleadings. Answers to objections may be filed until March 16, 1979;

3. If timely and properly supported objections are filed, we will give further consideration to the matters and issues raised by the objections before we take further action; *provided,* that we may proceed to enter an order in accordance with our tentative findings and conclusions set forth in the order if we determine that there are no factual issues present that warrant the holding of an oral evidentiary hearing; [9]

4. In the event no objections are filed, all further procedural steps will be deemed to have been waived and the Secretary shall enter an order which (1) shall make final our tentative findings and conclusions set forth in this order, and (2) subject to the disapproval of the President pursuant to section 801(a) of the Act, shall issue an amended foreign air carrier permit to the applicant in the specimen form attached; and

5. We shall serve this order upon Air Haiti, S.A., the Ambassador of Haiti in Washington, D.C. and the United States Departments of State and Transportation.

We shall publish this order in the FEDERAL REGISTER and shall transmit a copy to the President of the United States.

By the Civil Aeronautics Board. [10]

PHYLLIS T. KAYLOR,
*Secretary.*

[Specimen Permit]

PERMIT TO FOREIGN AIR CARRIER (AS AMENDED)

AIR HAITI, S.A.

is authorized, subject to the provisions of the Federal Aviation Act of 1958, as amended, and the orders, rules, and regulations of the Board, to engage in foreign air transportation with respect to persons, property and mail as follows:

1. Between a point or points in Haiti, an intermediate point or points in the Bahamas, and the terminal point Miami, Florida;

2. Between a point or points in Haiti, an intermediate point or points in the Dominican Republic, and the terminal point San Juan, Puerto Rico; and

3. Between a point or points in Haiti and the terminal point New York, New York.

The holder shall be authorized to engage in charter trips in foreign air transportation, subject to the terms, conditions, and limitations prescribed by Part 212 of the Board's Economic Regulations.

The holder, in the performance of its operations over Route 1 of this permit between a point or points in Haiti, an intermediate point or points in the Bahamas, and the terminal point Miami, Florida, shall not pick up or discharge at Miami, Florida, any passengers, property or mail destined for or originating at a point or points in the Bahamas.

The holder shall not operate any aircraft under the authority granted by this permit, unless the holder complies with operational safety requirements at least equivalent to Annex 6 of the Chicago Convention.

The holder shall confrom to the airworthiness and airman competency requirements prescribed by the Government of Haiti for Haitian international air service.

This permit shall be subject to all applicable provisions of any treaty, convention, or agreement affecting international air transportation now in effect, or that may become effective during the period this permit remains in effect, to which the United States and Haiti shall be parties.

This permit shall be subject to the condition that in the event any practice develops which the Board regards as inimical to sound economic conditions, the holder and the Board will consult and will use their best efforts to agree upon modifications satisfactory to the Board and the holder.

This permit shall be subject to the condition that the holder shall keep on deposit with the Board a signed counterpart of Agreement CAB 18900, an agreement relating to liability limitations of the Warsaw Convention and the Hague Protocol approved by Board Order E-23680, May 13, 1966, and a signed counterpart of any amendment or amendments to such agreement which may be approved by the Board and to which the holder becomes a party.

The holder (1) shall not provide foreign air transportation under this permit unless there is in effect third-party liability insurance in the amount of $1,000,000 or more to meet potential liability claims which may arise in connection with its operations under this permit, and unless there is on file with the Docket Section of the Board a statement showing the name and address of the insurance carrier and the amounts and liability limits of the third-party liability insurance provided, and (2) shall not transport any passengers on any foreign air transportation flight operated under this permit unless there is in effect liability insurance sufficient to cover the obligations assumed in its counterpart Agreement CAB 18900, and unless there is on file with the Docket Section of the Board a statement showing the name and address of the insurance carrier, the expiration date of the policy, and the amounts and liability limits

[7] Any interested persons objecting to the issuance of an order making final the Board's tentative findings and conclusions, and issuing the attached permit, shall be allowed 20 days in which to respond from the date of service of this order. Answers to objections shall be filed no later than 10 days thereafter.

[8] Our tentative findings are based upon the fact that amendment of Air Haiti's permit will not result in a significant increase in its current civil aviation operations, nor will it result in an annual increase in fuel consumption of more than 10 million gallons.

[9] Since provision is made for the filing of objections to this order, petitions for reconsideration will not be entertained.

[10] All Members concurred except Member O'Melia who did not vote.

of the passenger liability insurance provided. Upon request, the Board may authorize the holder to supply the name and address of an insurance syndicate in lieu of the names and addresses of the member insurers.

The initial tariff filed by the holder shall not set forth rates, fares and charges lower than those that may be in effect for any U.S. air carrier in the same foreign air transportation; *however*, this limitation shall not apply to a tariff filed after the initial tariff regardless of whether this subsequent tariff is effective before or after the introducton of the authorized service.

By accepting this permit, the holder waives any right it may possess to assert any defense of sovereign immunity from suit in any action or proceeding instituted against the holder in any court or other tribunal in the United States (or its territories or possessions) based upon any claim arising out of operations by the holder under this permit.

The exercise of the privileges granted shall be subject to such other reasonable terms, conditions, and limitations required by the public interest as may be prescribed by the Board.

This permit shall be effective on————, and shall terminate five years later; *Provided*, that if during the period this permit shall be effective, the operation of the foreign air transportation here authorized becomes the subject of any treaty, convention, or agreement to which the United States and Haiti are or shall become parties, then this permit is continued in effect during the period provided in such treaty, convention, or agreement.

The Civil Aeronautics Board, through its Secretary, has executed this permit and affixed its seal on ————.

————,
*Secretary.*

[FR Doc. 79-4998 Filed 2-14-79; 8:45 am]

[6320-01-M]

[Order 79-2-56; Docket 33949]

## ONTARIO WORLDAIR, LTD.

### Statement of Tentative Findings and Conclusions and Order To Show Cause

Adopted by the Civil Aeronautics Board at its office in Washington, D.C. on the 7th day of February, 1979.

Application of ONTARIO WORLDAIR LIMITED for a foreign air carrier permit pursuant to section 402 of the Federal Aviation Act, as amended.

By application filed on November 7, 1978, Ontario Worldair Limited (OWL) requests an initial foreign air carrier permit [1] authorizing it to engage in charter foreign air transportation with large aircraft [2] as follows:

Charter flights with respect to persons and their accompanied baggage, and planeload charter flights of property, between any point or points in Canada and any point or points in the United States.

### Fitness of the Applicant for a Foreign Air Carrier Permit

Ontario Worldair Limited was incorporated in the Province of Ontario, Canada on April 29, 1968. The Air Transport Committee of the Canadian Transport Commission has issued Ontario Worldair Limited License No. A.T.C. 504/74 (CF) dated October 10, 1978, a Class 9-4 license which authorizes the holder to operate international charter commercial air services of persons and property between Canada and any other country from a base at Toronto, Ontario. The licensee is restricted to the use of one aircraft in Group G.[3] At present, the applicant is operating in the Canada-U.S. charter market under exemption authority.[4] The applicant has had no safety or tariff violations or accidents.

No answers to the application have been filed.

We have tentatively decided to grant the applicant the proposed charter authority for a period of five years. Once the five years have elapsed, we shall be in a position to properly exaluate the carrier's performance if a renewal is requested.

The applicant plans to operate approximately 80 charter flights between Canada and points in the United States during the 1978/79 season, carrying a total of approximately 14,000 passengers.

### Financial and Operational Fitness

The applicant's balance sheet for the year ended November 30, 1978 indicates current assets of $764,000 and current liabilities of $336,000. Total assests are $1,364,000 with total liabilities of $763,000.[5] As of December 31, 1978, the applicant had $123,650 cash on hand, and projects a positive cash flow throughout 1979.[6] For the calendar years 1979 and 1980, Ontario Worldair projects net income of $234,000 and $380,000, respectively. These projections are based on commercial charter operations using one leased 185-seat B-707 aircraft with lease of additional aircraft anticipated by July 1980. The applicant plans to operate charter flights to the Caribbean, South America, San Juan, and three points in Florida (Orlando, St. Petersburg and Ft. Lauderdale). Finally, Ontario Worldair states that Canadian regulations require escrow of all passenger funds. Thus, passenger funds are fully protected in the event of flight cancellations, for whatever reason.

As to its operational fitness, the applicant states that its maintenance program is based on FAA approved maintenance planning; that all of its aircraft maintenance (except engines) is performed by Worldair Ltd; and that its engine maintenance is done by Air Canada.

### Public Interest

The applicant relies on the Nonscheduled Air Services Agreement signed by the Governments of Canada and the United States of America on May 8, 1974 as the basis for the grant of the requested authority. By diplomatic note No. 608, dated October 24, 1978, the Government of Canada designated the applicant to perform charter services with large aircraft.

Mr. Peter Linnett, a permanent Canadian resident and landed immigrant from the United Kingdom, owns 49 percent of the shares of Ontario Worldair Limited; [7] Mr. F. G. Carson, 12 percent; Mr. J. L. Jaskula of Western Horizon Holdings Ltd., combined individual and company shares, 19 percent; [8] Mr. Allan McPetrie, 8 percent, Mr. D. E. Cooper, 8 percent, and Mr. J. Marvin, 4 percent. Messrs. Carson, Jaskula, McPetrie, Cooper and Marvin are Canadian nationals. The applicant states that none of its shares are held for the benefit of any other person or orgnaization, and none of its stock is owned by the Government of Canada.

In view of the foregoing and all the facts of record, the Board tentatively finds and concludes that:

1. It is in the public interest to issue a foreign air carrier permit to Ontario Worldair Limited for a period of five years, authorizing it to operate charter foreign air transportation of persons and their accompanied baggage and planeload charters of property between any point or points in Canada and point or points in the United States limited to aircraft prescribed by the Canadian authorities.

[1] Pursuant to the Nonscheduled Air Services Agreement between the United States and Canada dated May 8, 1974.

[2] "Large aircraft" are defined by the Nonscheduled Air Services Agreement as aircraft having both (a) a maximum passenger capacity of more than 30 seats or a maximum payload capacity of more than 7,500 pounds, and (b) a maximum authorized takeoff weight on wheels greater than 35,000 pounds.

[3] Under Canadian Air Transport Committee regulations, aircraft in Group G are permitted a maximum authorized takeoff weight greater than 150,000 pounds, but not greater than 350,000 pounds.

[4] Order 78-12-165, December 22, 1978.

[5] Exhibit 23—supplementary exhibits of the applicant received January 12, 1979.

[6] Exhibit 22. In addition, the applicant has a $600,000 line of credit from the Bank of Nova Scotia Exhibit 21.

[7] Mr. Linnett owns 59 percent of the stock of Strand Holidays Ltd., a registered tour wholesaler in Canada. Strand Holidays is not engaged in the sale of transportation or travel agency services in the United States. While Mr. Linnett is not a Canadian citizen, we are informed that he has applied to become a Canadian citizen. Under these circumstances, we will waive the ownership and control requirement.

[8] Mr. Jaskula holds 8 percent of OWL's stock in his own name and 11 percent under Western Horizon Holdings Ltd. He is the sole shareholder in that company.

2. The public interest requires that the exercise of the privileges granted by the permit shall be subject to the terms, conditions, and limitations contained in the specimen form of permit attached to this order, and to such other reasonable terms, conditions, and limitations required by the public interest as may be prescribed by the Board;

3. Ontario Worldair Limited is fit, willing and able properly to perform the described foreign air transportation and to conform to the provisions of the Act and the rules, regulations, and requirements of the Board;

4. The public interest does not require an oral evidentiary hearing; [9]

5. The issuance to Ontario Worldair Limited of the proposed foreign air carrier permit is not a "major Federal acton significantly affecting the quality of the human environment" within the meaning of section 102(2)(C) of the National Environmental Policy Act of 1969, and will not constitute a "major regulatory action" under the Energy Policy and Conservation Act of 1975, as defined in section 313.4(a)(1) of the Board's regulations; [10] and

6. Except to the extent granted, the application of Ontario Worldair Limited in Docket 33949 should be denied.

Accordingly, 1. We direct interested persons to show cause why the Board should not (1) make final its tentative findings and conclusions, and (2) subject to the disapproval of the President, issue a foreign air carrier permit to Ontario Worldair Limited for a period of five years in the specimen form attached;

2. Any interested person objecting to the issuance of an order making final the Board's tentative findings and conclusions and issuing the attached specimen permit, shall file with the Board and serve on the persons named in paragraph 5, no later than March 6, 1979, a statement of objections specifying the part or parts objected to, and concrete evidence to be relied upon in support of the objections. If an oral evidentiary hearing is requested, the objector should state in detail why such hearing is considered necessary and what relevant and material facts he would expect to establish through such hearing which cannot be established in written pleadings. Answers to objections may be filed until March 16, 1979;

3. It timely and properly supported objections are filed, we will give further consideration to the matters and issues raised by the objections before we take further action; *Provided*, that we may proceed to enter an order in accordance with our tentative findings and conclusions set forth in this order if we determine there are no factual issues present that warrant the holding of an oral evidentiary hearing; [11]

4. In the event no objections are filed, all further procedural steps will be deemed to have been waived and the Secretary shall enter an order which (1) shall make final our tentative findings and conclusions set forth in this order, and (2) subject to the disapproval of the President pursuant to section 801(a) of the Act, shall issue an amended foreign air carrier permit to the applicant in the specimen form attached; and

5. We shall serve this order upon Ontario Worldair Limited, the Ambassador of Canada in Washington, D.C., and the United States Departments of State and Transportation.

We shall publish this order in the FEDERAL REGISTER and shall transmit a copy to the President of the United States.

By the Civil Aeronautics Board. [12]

PHYLLIS T. KAYLOR,
*Secretary.*

[Specimen Permit]

PERMIT TO FOREIGN AIR CARRIER

ONTARIO WORLDAIR, LTD. (CANADA)

is authorized, subject to the provisions of the Federal Aviation Act of 1958, as amended, and the orders, rules, and regulations of the Board, to engage in charter foreign air transportation as follows: Charter flights of persons and their accompanied baggage, and planeload charter flights of property, between any point or points in Canada and any point or points in the United States.

The holder shall be authorized to perform those types of charters originating in Canada and in the United States, as are now or may be prescribed in Annex B of the Nonscheduled Air Services Agreement between the United States and Canada, signed May 8, 1974, including any amendments, supplements, reservations, or supersessions to that Agreement. [1]

This permit shall be subject to the following terms, conditions and limitations:

(1) The authority of the holder to perform United States-originating large aircraft charter flights shall be subject to the provisions of Part 214 of the Board's Economic Regulations, other regulations of the Board governing tours or charters, and all amendments and revisions adopted by the Board. The authority of the holder to perform Canadian-originating charter flights shall be subject to the Air Carrier Regulations of the Canadian Transport Commission. The holder shall, nevertheless, not be authorized to provide charters of a type other than as authorized by Annex B of the Nonscheduled Air Services Agreement between the United States and Canada, signed May 8, 1974, including any amendments, supplements, reservations or supersessions to that Agreement.

(2) The holder shall not engage in foreign air transportation between the United States and any point or points, other than a point or points in Canada, or transport any property or persons whose journey includes a prior, subsequent, or intervening movement by air (except for the movement of passengers independently or any group) to or from a point not in the United States or Canada: *Provided* that the Board may, upon application by the holder, or by regulation, authorize the performance of charters where such movements are involved.

(3) The holder shall not perform United States-originating charter flights which at the end of any calendar quarter would result in the aggregate number of all United States-originating charter flights performed by the holder on or after May 8, 1974 exceeding by more than one-third the aggregate number of all Canadian-originating charter flights performed by the holder on or after May 8, 1974: *Provided*, that the Board may authorize the performance of charters not meeting the requirements set forth. For the purpose of making such computation the following shall apply:

(a) A charter shall be considered to originate in the United States (or Canada) if the passengers or property are first taken on board in that country, and shall be considered as one flight whether the charter be one-way, round trip, circle tour, or open jaw, even if a separate contract is entered into for a return portion of the charter trip from Canada (or the United States).

(b) The computation shall be made separately for (i) "large aircraft" flight of persons; (ii) "large aircraft" flights of property; (iii) "small aircraft" flights of persons; and (iv) "small aircraft" flights of property. [2]

---

[9] Any interested persons having objections to the issuance of an order making final the Board's tentative findings and conclusions, and issuing the attached specimen permit, shall be allowed 20 days to respond from the date of service of this order.

[10] Our tentative finding is based on the fact that issuance of the proposed permit will not result in a significant increase in civil aviation operations, nor will it result in fuel consumption of more than 10 million gallons annually.

[11] Since provision is made for the filing of objections to this order, petitions for reconsideration will not be entertained.

[12] All Members concurred except Member O'Melia who did not vote.

[1] Annex B (II)(B) and (III)(B) presently authorize the following types of large and small aircraft charters originating in Canada: Single Entity Passenger, Single Entity Property, Pro Rata Common Purpose, Advance Booking, and Inclusive Tour, and split passenger charters of the types set forth, subject to Canadian Transport Commission Regulations which presently do not permit Advance Booking Charters for small aircraft. Annex B(II)(A) presently authorizes the following types of large aircraft charters originating in the United States: Single Entity Passenger, Single Entity Property, Pro Rata Affinity, Mixed (Entity/Pro Rata), Inclusive Tour, Study Groups, Overseas Military Personnel, and Travel Group, and split passenger charters of the types set forth. United States-originating small aircraft charters are governed by the definition set forth in condition (1)—see Annex B, (III)(A).

[2] Annex A(I)(A) of the Nonscheduled Air Services Agreement between the United States and Canada, signed May 8, 1974, defines a "large aircraft" as an aircraft having both: (1) a maximum passenger capacity (as determined by CAB Regulations) of more than 30 seats or a maximum payload capacity (as determined by CAB Regulations) of more than 7,500 pounds; and (2) a maximum authorized takeoff weight on wheels (as determined by Canadian Transport Commis-

Footnotes continued on next page

(c) In the case of a lease of aircraft with crew for the performance of a charter flight on behalf and under the authority of another carrier, the flight shall be included in the computation if the holder is the lessee, and shall not be included if the holder is the lessor.

(d) There shall be excluded from the computation:

(i) flights utilizing aircraft having a maximum authorized takeoff weight on wheels (as determined by Canadian Transport Commission Regulations) not greater than 18,000 pounds; and

(ii) flights originating at a United States terminal point of a route authorized pursuant to the Air Transport Services Agreement between the United States and Canada, signed January 17, 1966, as amended, or any agreement which may supersede it, or any supplementary agreement thereto which establishes obligations or privileges thereunder (if, pursuant to any such agreement, the holder also holds a foreign air carrier permit authorizing individually ticketed or individually waybilled service over such route, and provides some scheduled service on any route pursuant to any such agreement), when such flights serve either (a) a Canadian terminal point on such route, or (b) any Canadian intermediate point authorized for service on such route by such foreign air carrier permit.

(4) The holder may grant stopover privileges at any point or points in the United States only to passengers and their accompanied baggage moving on a Canadian-originating large aircraft flight operating under a contract for charter transportation to be provided solely by the holder (even if a different aircraft is used); *Provided*, that the Board may authorize the performance of charters not meeting the requirements set forth.

(5) The Board, by order or regulation and without hearing, may require advance approval of individual charter trips conducted by the holder pursuant to the authority granted by this permit, if it finds such action to be required in the public interest.

(6) The holder shall conform to the airworthiness and airman competency requirements prescribed by the Government of Canada for Canadian international air service.

(7) The holder shall not operate any aircraft under the authority granted by this permit unless the holder complies with operational safety requirements at least equivalent to Annex 6 of the Chicago Convention.

(8) The initial tariff filed by the holder shall not set forth rates, fares, and charges lower than those then in effect for any U.S. air carrier in the same foreign air transportation; *However*, this limitation shall not apply to a tariff filed after the initial tariff regardless of whether this subsequent tariff is effective before or after the introduction of the authorized service.

(9) This permit shall be subject to all applicable provisions of any treaty, convention, or agreement affecting international air transportation now in effect, or that may become effective during the period this permit remains in effect, to which the United States and Canada shall be parties.

(10) This permit shall be subject to the condition that the holder shall keep on deposit with the Board a signed counterpart of CAB Agreement 18900, an agreement relating to liability limitations of the Warsaw Convention and the Hague Protocol approved by Board Order E-23680, May 13, 1966, and a signed counterpart of any amendment or amendments to such agreement which may be approved by the Board to which the holder becomes a party.

(11) The holder (1) shall not provide foreign air transportation under this permit unless there is in effect third-party liability insurance in the amount of $1,000,000 or more to meet potential liability claims which may arise in connection with its operations under this permit, and unless there is on file with the Docket Section of the Board a statement showing the name and address of the insurance carrier and the amounts and liability limits of the third-party liability insurance provided, and (2) shall not provide foreign air transportation of persons unless there is in effect liability insurance sufficient to cover the obligations assumed in CAB Agreement 18900, and unless there is on file with the Docket Section of the Board a statement showing the name and address of the insurance carrier and the amounts and liability limits of the passenger liability insurance provided. Upon request, the Board may authorize the holder to supply the name and address of an insurance syndicate in lieu of the name and address of the member insurers.

(12) By accepting the permit, the holder waives any right it may possess to assert any defense of sovereign immunity from suit in any action or proceeding instituted against the holder in any court or other tribunal in the United States (or its territories or possessions) based upon any claim arising out of operations by the holder under this permit.

The exercise of the privileges granted by this permit shall be subject to such other reasonable terms, conditions, and limitations as may be prescribed by the Board.

This permit shall be effective on _____. Unless otherwise terminated at an earlier date pursuant to the terms of any applicable treaty, convention, or agreement, this permit shall terminate at the earliest of the following times: (1) five years from its effective date, or (2) upon the effective date of any treaty, convention, or agreement, or amendment which shall have the effect of eliminating the charter foreign air transportation here authorized from the transportation which may be operated by carriers designated by the Government of Canada (or in the event of the elimination of part of the charter foreign air transportation here authorized, the authority granted shall be terminated to the extent of such elimination), or (3) upon the effective date of any permit granted by the Board to any other carrier designated by the Government of Canada in lieu of the holder, or (4) upon the termination or expiration of the Nonscheduled Air Services Agreement between the United States and Canada, signed May 8, 1974; *Provided*, that clause (4) of this paragraph shall not apply if, prior to the occurrence of the event specified in clause (4), the operation of the foreign air transportation here authorized becomes the subject of any treaty, convention, or agreement to which the United States and Canada are or shall become parties.

The Civil Aeronautics Board, through its Secretary, has executed this permit and affixed its seal on _____.

_____,
*Secretary.*

[FR Doc. 79-4999 Filed 2-14-79; 8:45 am]

[6320-01-M]

[Order 79-2-57; Docket No. 32038]

## TRAVELAIR AG (SWITZERLAND)

### Statement of Tentative Findings and Conclusions and Order To Show Cause

Adopted by the Civil Aeronautics Board at its office in Washington, D.C. on the 7th day of February, 1979.

Travelair AG (Switzerland) for an indirect foreign air carrier permit pursuant to section 402 of the Federal Aviation Act of 1958, as amended.

By application filed February 7, 1978, Travelair Services AG (Switzerland) requests a foreign air carrier permit authorizing it to engage as a charter tour operator indirectly in foreign air transportation of persons between points in the United States and any point or points outside the United States, for a period of five years. On May 9, 1978 the applicant filed a petition for a show cause order why its application should not be granted without an oral evidentiary hearing.[1] Travelair has submitted supporting exhibits with its show cause motion and also a response to a specific Board request for additional evidence[2] to demonstrate compliance with requirements for grant of an indirect foreign air carrier permit.

In support of its application, Travelair proffered evidence regarding ownership and control requirements and financial and operational fitness. In addtion, the applicant contends that its application is also intended to comply with a consent judgment settling a Board complaint against Trans World Airlines, Inc., and Travellers-related entities and individuals.[3] During 1977 the Bureau of Enforcement (now Bureau of Consumer Protection) had conducted an investigatory proceeding of Travellers Air Services (TAS) which resulted in an allegation that TAS, although apparently a domestic corporation, was a foreign entity due to its domination by Travellers International, A.G. (TI), a Swiss Corporation and, therefore, in violation of the Act because it lacked a 402 permit. While the

Footnotes continued from last page

sion Regulations) greater than 35,000 pounds. A "small aircraft" is defined as an aircraft which is not a "large aircraft".

[1] Further, the applicant disclosed that the name of the company was legally changed to Travelair AG and it also requested that it be granted a waiver from the rquirements of Part 312 of the Board's Procedural Regulations.

[2] Order 78-8-136, August 23, 1978.

[3] *CAB v. Trans World Airlines, Inc., et. al.* 77 Civ. 6081 (USDC, Southern District, New York). The Travellers related entities and individuals include: Travellers Air Services, Inc.; Travellers International Tour Operators, Inc.; Travellers International, A.G.; Gerald T. Herrod; and H. David Seegul.

consent decree did not establish the liabilty of any defendent, it did require a Travellers-connected entity to apply for a 402 permit and included a Board agreement to refrain from enforcement action against 1978 tour operations conducted by TAS during the pendency of a foreign air carrier application, until December 15, 1978, one year after the entrance of the consent decree.[4]

The United States Tour Operators Association (USTOA) has filed objections to Travelair's application and Motion for an Order to Show Cause.[5] Generally, it requests a hearing to fully explore the inter-relationship between the applicant and the TI-related entity, to examine the purpose for this application, and to determine the applicant's compliance disposition. It alleges domination and control by TWA demonstrated by previous TWA-Travellers business arrangements and TWA's discretionary declination to collect charter cancellation charges from TAS, and further contends that no show cause order should be issued due to USTOA's pending litigation in United States District Court against TWA and TAS.[6] It further states that none of the applicant's pleadings have satisfied USTOA that the public interest warrants issuance of a permit to Travelair.

We have tentatively decided to grant Travelair its request for a foreign air carrier permit. We tentatively conclude that grant of this permit would be in the public interest inasmuch as Travelair will offer significant opportunities to the traveling public and the Government of Switzerland grants reciprocal rights to U.S. indirect carriers. Additionally, Travelair's operations will be subject to the Board's charter regulations which provide protection to the traveling public through mandatory surety bonds and escrow arrangements. We do not believe that the issuance of this show cause order to Travelair should in anyway prejudice USTOA's civil court proceeding.

OWNERSHIP AND CONTROL

Travelair has stated that it is a Swiss corporation, 100% owned by Dolf C. Dettling, a Swiss citizen. While some managing employees are U.S. citizens, the majority of the company officers are Swiss nationals. The applicant has disclosed its close working relations with TI and its affiliates. This will include the purchase of land tours from TI which will also provide it with working capital and the managerial expertise necessary to conduct the proposed operations. We see no reason to be concerned about these business arrangements. Indeed, in agreeing to a consent decree last year, we specifically contemplated an association between an applicant for a permit and TI. Moreover, TI is a Swiss corporation. Travelair unqualifiedly denies the existence of any special relationship with TWA, and we have received no evidence from any source to indicate otherwise. Indeed, during the Bureau of Enforcement's investigation, no evidence was uncovered to demonstrate a control relationship between TWA and TI-or any TI-related entity, although the evidence demonstrated the existence of a close business association between them.

USTOA has filed three objections in this docket alleging domination and control by TWA—but it has not yet submitted hard evidence demonstrating this connection. Rather, its reponses are composed of vague, conclusionary allegations, unsubstantiated by corroborative evidence. In view of the pleadings, we see no merit in having a hearing to review the other areas USTOA contends require exploration nor to delay the processing of this permit due to USTOA's pending litigation.[7]

FINANCIAL AND OPERATIONAL FITNESS

Our evidence indicates further that the applicant is financially and operationally fit to conduct these tour operations. As previously stated it will be closely associated with TI and its affiliates which have provided land tours to TWA, TAS, SAS, the Cunard Lines, and British Airways. It will be able to call upon the financial and managerial expertise and experience of TI to operate the types of charter programs previously operated by TAS. Thus, in view of Travelair's stated attempt to comply with the consent decree and all the facts and evidence of record, we tentatively conclude that it is fit, willing and able to properly conduct the foreign air transportation services for which authority is sought.

INTERLOCKING RELATIONSHIPS

We take note of one other consideration tangentially related to issuance of Travelair's permit—the interlocking relationship between the officers/directors of Travellers International Tour Operator, Inc. (TITO), TI, and Travelair. Both Dolf C. Dettling and H. David Seegul are officers/directors of Travelair, A.G. and TITO, while Dettling is also a director of TI. As previously noted TI is primarily engaged in the sale of land packages and TITO, a New York corporation wholly-owned by TI, is similarly engaged. Based upon the evidence of record in this case we tentatively conclude that neither TI or TITO would be deemed air carriers for section 409 purposes.

Finally, similarly to our grants to other foreign indirect air carriers, we shall require that the name Travelair (Switzerland) appear whenever it holds itself out to the general public while conducting its operations.

Since there is no unresolved material issue of fact in dispute requiring oral evidentiary procedures, we tentatively find that there is no impediment to use of show cause procedures in processing Travelair's application. Any person may present factual information which contravenes our tentative findings. We will, of course, evaluate any objections from USTOA or any other interested person, to our tentative findings, including our findings that an oral evidentiary hearing is not required by factual dispute or the public interest, as well as any objections to other tentative conclusions set forth above before issuing any further order.

On the basis of the foregoing, we tentatively find and conclude:

1. That Travelair AG is substantially owned and effectively controlled by nationals of Switzerland;

2. That Travelair AG is fit, willing, and able properly to perform the transportation described in the specimen permit attached to this order, and to conform to the provisions of the Federal Aviation Act of 1958, as amended, and the rules, regulations, and requirements of the Board;

[4] TWA and TAS subsequently requested a section 416 exemption award for formal authority to operate charters during 1978. Order 77-12-103, December 20, 1977. Without deciding the citizenship of TAS, the Board dismissed its request explaining that if TAS were a U.S. citizen it would not need seciton 416 authority since the Board's Regulations automatically exempt U.S. tour operators from certificate requirements and if it were a non-U.S. citizen it could not receive 416 authority since such authority can only be applied to U.S. citizens. (We now have power to exempt foreign air carriers and indirect air carriers, because of the Airline Deregulation Act of 1978, pursuant to section 416(b) of the Act.) The Board denied TWA's application for exemption to conduct the charters with TAS because to do otherwise would be to grant authority indirectly that could not be granted directly.

[5] USTOA again voiced its objections to this application on October 27, 1978 by telegram, alleging that Travelair's response to the Board's August information request did not satisfy USTOA's objections, and demanded an oral hearing.

[6] *United States Tour Operators Association, et. al.* TWA et. al. 77 Civ. 911 (USDC, Southern District of New York). The Court has issued a decision affirming USTOA's allegation of section 401 violations of the Act—due to TWA chartering to an ineligible entity, TAS; however, it has not yet issued an implementing order.

[7] We regard this applicant's compliance with the U.S. District Court consent decree as evidence of its present compliance disposition notwithstanding any apparent taint derived from the court's finding of prior Act violations by a different TI-related entity, TAS. This applicant's submissions demonstrate its willingness to comply with all provisions of the Act, Board regulations, rules and orders.

3. That it is in the public interest to issue an indirect foreign air carrier permit to Travelair, AG (Switzerland) in the specimen form attached, authorizing the carrier, for a period of five years, to engage indirectly in foreign air transportation of persons from any point or points in the United States to any point or points outside the United States, and return;

4. That an oral evidentiary hearing is not required by the public interest;

5. That the public interest requires that the exercise of the privileges granted by the permit shall be subject to the terms, conditions, and limitations contained in the specimen permit attached to this order, and to such other reasonable terms, conditions, and limitations required by the public interest as may from time to time be prescribed by the Board;

(a) With respect to the operations conducted pursuant to the authority granted, the holder shall be subject to the provisions of the Board's Regulations governing charter operations, as now or later amended;

(b) In the performance of any service authorized by this permit, the holder shall not exend or receive any preference or advantage of any nature to or from any direct air carrier, and with respect to all matters which may relate to the services authorized by its permit shall not deal with such direct air carrier except in a manner and on the same basis and terms as are available to any other indirect air carrier;

(c) In using the authority granted here (1) the name Travelair, A. G. (Switzerland) shall appear on all of the holder's advertising tickets, stationery, and other public document; (2) the above name will always be used in its entirety; and (3) words designating the holder's nationality shall be displayed at least as prominently as its most prominently displayed name on any material disseminated to the public. For purposes of this order, the holder's name shall include its legal name, trademarks, tradenames or any other name that may be used in conjunction with any of the above;

6. That the issuance of Travelair's permit will not constitute a "major Federal action significantly affecting the quality of the human environment" within the meaning of section 102(2)(C) of the National Environmental Policy Act (NEPA) and will not constitute a "major regulatory action" under the Energy Policy and Conservation Act (EPCA), as defined in section 313.4(a) of the Board's Regulations;[8]

7. That Travelair's request for a waiver of Part 312 of the Board's Procedural Regulations should be granted; and

8. That except to the extent granted, the application of Travelair AG in Docket 32088 should be denied.

*Accordingly:* 1. We direct all interested persons to show cause why the Board should not (1) make final its tentative findings and conclusions stated here; and (2) subject to the disapproval of the President, issue an indirect foreign air carrier permit to Travelair AG in the specimen form attached.

2. We shall require interested persons having objections to the issuance of an order making final the Board's tentative findings and conclusions issuing the proposed permit to file with the Board and serve upon the persons named in paragraph 5, on or before March 16, 1979, a statement of objections specifying the part or parts of the tentative findings and conclusions objected to, together with a summary of testimony, statistical data and such evidence expected to be relied upon in support of the statement of objections. If an oral hearing is requested, the objector should state in detail why such hearing is considered necessary and what relevant and material facts he would expect to establish through such hearing which cannot be established in written pleadings. Answers to objectons may be filed until March 26, 1979;

3. If timely and properly supported objections are filed, we shall accord full consideration to the matters and issues raised by the objector before further action is taken by the Board; *Provided*, that the Board may proceed to enter an order in accordance with its tentative findings and conclusions set forth in the order if it determines that there are no factual issues present that warrant the holding of an oral evidentiary hearing;[9]

4. In the event no objections are filed, all further procedural steps will be deemed to have been waived, and we shall direct the Secretary to enter an order which (1) shall make final the Board's tentative findings and conclusions set forth in this order; and (2) subject to the disapproval of the President pursuant to section 801(a) of the Act, shall issue an indirect foreign air carrier permit to the applicant in the specimen form attached; and

5. We direct this order to be served upon Travelair AG, the Ambassador of Switzerland in Washington, D.C., the United States Tour Operators Association, Inc., and the Departments of State and Transportation.

We shall publish this order in the FEDERAL REGISTER and transmit it to the President.

By the Civil Aeronautics Board.

PHYLLIS T. KAYLOR,*
*Secretary.*

[Specimen Permit]

PERMIT TO FOREIGN INDIRECT AIR CARRIER

TRAVELAIR AG (SWITZERLAND)

is hereby authorized, subject to the following provision, the provisions of the Federal Aviation Act of 1958, and the orders, rules, and regulations of the Board, to engage indirectly in foreign air transportation of persons and their accompanying baggage between any point or points in the United States and any point or points outside the United States.

This permit is subject to all applicable provisions of any treaty, convention, or agreement affecting the right to engage in indirect air transportation of persons now in effect or that may become effective during the period this permit remains in effect, to which the United States and Switzerland shall be parties.

The exercise of the privileges granted hereby shall be subject to the terms, conditions, and limitation set forth in Order dated ————, and to such other reasonable terms, conditions, and limitations required by the public interest as may from time to time be prescribed by the Board.

By accepting this permit the holder waives anyright it may possess to assert any defense of sovereign immunity from suit in any action or proceeding instituted against the holder in any court or other tribunal in the United States (or its territories or possessions) based upon any claim arising out of operations by the holder under this permit.

This permit shall be effective on ————, and shall terminate five years thereafter: *Provided, however,* that if during said period the operation of the foreign air transportation herein authorized becomes the subject of any treaty, convention, or agreement to which the United States and Switzerland are or shall become parties, then and in that event this permit is continued in effect during the period provided in said treaty, convention, or agreement.

The Civil Aeronautics Board through its Secretary has executed this permit and affixed it seal on ————.

————,
*Secretary.*

[FR Doc. 79-5000 Filed 2-14-79; 8:45 am]

[8]Our tentative findings are based upon the fact that issuance of Travelair's permit will not result in a significant increase in civil aviation operations in the United States. Further, we have no reason to believe that the grant of a permit to Travelair AG will cause an increase in operations requiring use of more than 10 million gallons of fuel annually.

[9]Since provision is made for the filing of objections to this order, petitions for reconsideration will not be entertained.

*All Members concurred except Member O'Melia who did not vote.

[6335-01-M]

## COMMISSION ON CIVIL RIGHTS

### COLORADO ADVISORY COMMITTEE

#### Agenda and Notice of Open Meeting

Notice is hereby given, pursuant to the provisions of the Rules and Regulations of the U.S. Commission on Civil Rights, that a Planning meeting

of the Colorado Advisory Committee (SAC) of the Commission will convene at 9:30 a.m. and will end at 12:00 noon on March 3, 1979, 1405 Curtis Street, Executive Tower Inn, Room 1706, Denver, Colorado 80202.

Persons wishing to attend this open meeting should contact the Committee Chairperson, or the Rocky Mountain Regional Office of the Commission, Executive Tower, 1405 Curtis Street, Suite 1700, Denver, Colorado 80202.

The purpose of this meeting is to be a discussion and planning on Energy Handbook for Policy Makers and possible mini-project in conjunction with International year of the child.

This meeting will be conducted pursuant to the rules and regulations of the Commission.

Dated at Washington, D.C., February 8, 1979.

JOHN I. BINKLEY,
*Advisory Committee Management Officer.*

[FR Doc. 79-4947 Filed 2-14-79; 8:45 am]

[6335-01-M]

## MASSACHUSETTS ADVISORY COMMITTEE

### Agenda and Notice of Open Meeting

Notice is hereby given, pursuant to the provisions of the rules and regulations of the U.S. Commission on Civil Rights, that a planning meeting of the Massachusetts Advisory Committee (SAC) of the Commission will convene at 4:00 p.m. and will end at 6:00 p.m. on March 7, 1979 at 34½ Beacon Street, Boston, Massachusetts.

Persons wishing to attend this open meeting should contact the Committee Chairperson, or the Northeastern Regional Office of the Commission, 26 Federal Plaza, Room 1639, New York, New York 10007.

The purpose of this meeting is to discuss program planning.

This meeting will be conducted pursuant to the provisions of the rules and regulations of the Commission.

Dated at Washington, D.C., February 12, 1979.

JOHN I. BINKLEY,
*Advisory Committee Management Officer.*

[FR Doc. 79-4948 Filed 2-14-79; 8:45 am]

[6335-01-M]

## WEST VIRGINIA ADVISORY COMMITTEE

### Agenda and Notice of Open Meeting

Notice is hereby given, pursuant to the provisions of the Rules and Regulations of the U.S. Commission on Civil Rights, that a Factfinding meeting of the West Virginia Advisory Committee (SAC) of the Commission will convene at 1:00 pm and will end at 5:00 pm on March 1, 1979, West Virginia Human Rights Commission, 1036 Quarrier Street, 2nd Floor, Charleston, West Virginia 25305.

Persons wishing to attend this open meeting should contact the Committee Chairperson, or the Mid-Atlantic Regional Office of the Commission, 2120 L Street, NW., Room 510, Washington, D.C., 20037.

The purpose of this meeting is to discuss civil rights issues within West Virginia.

This meeting will be conducted pursuant to the provisions of the rules and regulations of the Commission.

Dated at Washington, D.C., February 8, 1979.

JOHN I. BINKLEY,
*Advisory Committee Management Officer.*

[FR Doc. 79-4949 Filed 2-14-79; 8:45 am]

[3510-22-M]

## DEPARTMENT OF COMMERCE

### National Oceanic and Atmospheric Administration

## MARINE FISHERIES ADVISORY COMMITTEE

### Public Meetings

Pursuant to section 10(a)(2) of the Federal Advisory Committee Act, 5 U.S.C., Appendix I, notice is hereby given of meetings of the Marine Fisheries Advisory Committee (MAFAC) and three Subcommittees. The Committee meeting (MAFAC XXII) will be held on Wednesday and Thursday, March 7 and 8, 1979, in the Penthouse, Page Building No. 1, 2001 Wisconsin Avenue, N.W., Washington, D.C., with meetings starting at 8:30 a.m. Adjournment is planned for 3:00 p.m., Thursday.

Three Subcommittees will meet on Tuesday, March 6, 1979, at 1:00 p.m. The Subcommittee on Marine Recreational Fisheries will meet in Room 401, Page Building No. 2, 3300 Whitehaven Street, N.W., Washington, D.C; the Subcommittee on Consumer Affairs will meet in Room 357, Page Building No. 2; and the Subcommittee on Vessel Safety and Construction will meet in the Penthouse, Page Building No.1.

Agenda items for the MAFAC Committee meeting include: Presentations by the new NMFS Directors of the Office of Resource Conservation and Management and the Office of Marine Mammals and Endangered Species regarding their programs; Highly Migratory Species (Tuna) and Their Relationship to 200-mile limit, and related U.S. Embargo Policy; Great Lakes Fisheries; Subcommittee reports; and other miscellaneous items.

The Committee and Subcommittee meetings are open to the public and there will be seating for approximately 20 public members available on a first come, first served basis. Members of the public having an interest in specific items for discussion are advised that agenda changes are at times made prior to the meeting. To receive information on changes, if any, made to the agenda, interested members of the public should contact:

Ms. Phyllis Bentz, Executive Secretary, Marine Fisheries Advisory Committee, National Marine Fisheries Service, Washington, D.C. 20235, Telephone: (202) 634-7355.

At the discretion of the Chairperson, interested members of the public may be permitted to speak at times which allow an orderly conduct of Committee business, and a reasonable time relationship between the Committee's discussion of a given subject, and comments to that same subject by a member of the public.

Interested members of the public who wish to submit written comments should do so at the address noted above. To receive due consideration and facilitate their inclusion in the record of the meeting, written statements should be received within 10 days after the close of the committee meeting.

Dated: February 12, 1979.

JACK W. GEHRINGER,
*Deputy Assistant Administrator for Fisheries.*

[FR Doc. 79-4981 Filed 2-14-79; 8:45 am]

[3510-60-M]

### National Telecommunications and Information Administration

## U.S. INMARSAT PREPARATORY COMMITTEE WORKING GROUP

### Meetings

Notice is hereby given that the U.S. INMARSAT Preparatory Committee Working Group will meet at 9:30 a.m., in Room 712A, National Telecommunications and Information Administration, 1800 G Street, N.W., Washington, D.C. on March 13, 1979.

The principal agenda items will development of a work program and national positions relating to the technical, economic and organizational aspects of the INMARSAT system which will be addressed in meetings of the INMARSAT Preparatory Committee in May 1979.

The meetings will be open to the public; any member of the public will be permitted to file a written state-

ment with the Working Group before or after the meetings.

The names of the members of the Working Group, copies of the agendas, summaries of the meetings and other information pertaining to these meetings may be obtained from Melvin Barmat, National Telecommunications and Information Administration, Washington, D.C. 20504 (Tel: 202 395-3782).

CLOYD DODSON,
*Director,*
*Office of Administration.*

[FR Doc. 79-4940 Filed 2-14-79; 8:45 am]

---

[3510-20-M]

Office of the Secretary

IMPROVING GOVERNMENT REGULATIONS

Semi-Annual Agenda of Regulations

Notice is hereby given that the Department's semi-annual agenda of regulations, required pursuant to the Executive Order 12044, "Improving Government Regulations," will be published on or before March 1, 1979, instead of the originally scheduled date of Februrary 15, 1979. The publication date for the second agenda (July 15, 1979) and all subsequent agendas remains unchanged. (43 *FR* xiii)

JUANITA M. KREPS,
*Secretary of Commerce.*

[FR Doc. 79-5013 Filed 2-14-79; 8:45 am]

---

[3910-01-M]

## DEPARTMENT OF DEFENSE

Department of the Air Force

USAF SCIENTIFIC ADVISORY BOARD

Meeting

FEBRUARY 6, 1979.

The USAF Scientific Advisory Board Ad Hoc Committee on Turbine Engine Monitoring Systems will meet on March 5 & 6, 1979 at HQ AFLC, Wright-Patterson Air Force Base, Ohio. The purpose of the meeting will be to review the status of the F100 engine diagnostic system development. The Committee will meet from 9:00 a.m. to 4:30 p.m. each day.

The meeting concerns matters listed in Section 552b(c) of Title 5, United States Code, specifically subparagraph (1) thereof, and accordingly, will be closed to the public.

For further information contact the Scientific Advisory Board Secretariat at (202) 697-8845.

CAROL M. ROSE,
*Air Force Federal Register Liaison Officer.*

[FR Doc. 79-4902 Filed 2-14-79; 8:45 am]

[3910-01-M]

USAF SCIENTIFIC ADVISORY BOARD

Meeting

FEBRUARY 6, 1979.

The USAF Scientific Advisory Board Ad Hoc Committee on Space Defense will meet on March 12 & 13, 1979 at the Pentagon, Washington, DC. The purpose of the meeting is to review the space defense technology options. The Committee will meet from 9:00 a.m. to 4:30 p.m. each day.

The meeting concerns matters listed in Section 552b(c) of Title 5, United States Code, specifically subparagraph (1) thereof, and accordingly, will be closed to the public.

For further information contact the Scientific Advisory Board Secretariat at (202) 697-8845.

CAROL M. ROSE,
*Air Force Federal Register Liaison Officer.*

[FR Doc. 79-4903 Filed 2-14-79; 8:45 am]

---

[3810-70-M]

Office of the Secretary of Defense

DEFENSE SCIENCE BOARD TASK FORCE ON ECM

Advisory Committee Meeting

The Defense Science Board Task Force on ECM will meet in closed session on March 9, 1979 in The Pentagon, Arlington, Virginia.

The mission of the Defense Science Board is to advise the Secretary of Defense and the Under Secretary of Defense for Research and Engineering on scientific and technical matters as they affect the perceived needs to the Department of Defense.

A meeting of the Task Force on ECM has been scheduled for March 9, 1979 to discuss potential technical solutions to several current problems in electronic countermeasures.

In accordance with 5 U.S.C. App. I § 10(d) (1976), it has been determined that this Defense Science Board Task Force meeting concerns matters listed in 5 U.S.C. § 552b(c)(1) (1976), and that accordingly this meeting will be closed to the public.

MAURICE W. ROCHE,
*Director, Correspondence and Directives, DoD/WHS.*

FEBRUARY 12, 1979.

[FR Doc. 79-4982 Filed 2-14-79; 8:45 am]

[6450-01-M]

## DEPARTMENT OF ENERGY

Conservation and Solar Applications

NATIONAL ENERGY EXTENSION SERVICE ADVISORY BOARD

Meeting

Pursuant to the provisions of the Federal Advisory Committee Act (Pub. L. 92-463, 86 Stat. 770), notice is hereby given that the Ad Hoc Subcommittee of the National Energy Extension Service Advisory Board will meet Tuesday, March 6, 1979, from 1:00 p.m. to 5:00 p.m., in Room 8222C, 20 Massachusetts Avenue, N.W., Washington, D.C., and the National Energy Extension Service Advisory Board will meet Wednesday, March 7, 1979, from 9:30 a.m. to 5:00 p.m., in Room 4222C, 20 Massachusetts Avenue, N.W., Washington, D.C.

The Board was eatablished to carry on a continuing review of the comprehensive Energy Extension Service program and approved plans of the Governors of each State for implementing Energy Extension Service activities.

The tentative agenda is as follows:

Ad Hoc Subcommittee—March 6, 1979

1:00 p.m. to 5:00 p.m.—Review the draft report on the Energy Extension Service prepared by the subcommittee and make a recommendation regarding it for the full Board.

Full Committee—March 7, 1979

9:30 a.m.—Welcome and introduction.
10:00 a.m.—Update on EES progress.
11:00 a.m.—Review and act on the ad hoc subcommittee's recommendation regarding the Advisory Board's first report on the Energy Extension Service.
3:00 p.m.—Upcoming Advisory Board activities.
4:45 p.m.—Public Comment (10 minute rule).

The meetings are open to the public. The Chairmen of the Committee and subcommittee are empowered to conduct the meetings in a fashion that will, in their judgment, facilitate the orderly conduct of business. Any member of the public who wishes to file a written statement with the Subcomittee or Committee concerning items on the agenda will be permitted to do so, either before or after the meeting. Members of the public who wish to make oral statements concerning items on the agenda should inform Georgia Hildreth, Director, Advisory Committee Management, 202/252-5187, at least 5 days prior to the meetings and reasonable provision will be made for their appearance on the agenda.

The transcripts of the meetings will be available for public review and copying at the Freedom of Information Public Reading Room, Room GA-

152, Forrestal Building, 1000 Independence Avenue, S.W., Washington, D.C., between the hours of 8:00 a.m. and 4:30 p.m., Monday through Friday, except Federal holidays. Any person may purchase a copy of the transcript from the reporter. An Executive Summary of the meetings may be obtained by calling the Advisory Committee Management Office at the above number.

Issued at Washington, D.C. on February 12, 1979.

GEORGIA HILDRETH,
*Director, Advisory Committee Management.*

[FR Doc. 79-5001 Filed 2-14-79; 8:45 am]

---

[6450-01-M]

## Economic Regulatory Administration

## WOOD OIL CO.

### Action Taken on Consent Order

AGENCY: Economic Regulatory Administration, Department of Energy.

ACTION: Notice of final action taken on consent order.

SUMMARY: The Economic Regulatory Administration (ERA) of the Department of Energy (DOE) as the successor to the Federal Energy Administration (FEA) announces final action of a Consent Order.

EFFECTIVE DATE: February 15, 1979.

FOR FURTHER INFORMATION CONTACT:

Karen Ellis, ERA, 2000 M, Street, N.W., Room 5002-H, Washington, D.C. 20461; 202/632-8761.

SUPPLEMENTARY INFORMATION: On September 27, 1977, the FEA executed a proposed Consent Order with Wood Oil Company (Wood) of Tulsa, Oklahoma. Under 10 CFR 205.199J(c), a proposed Consent Order becomes effective only after the ERA has published notice of its execution and solicits and considers public comments with respect to its terms. Therefore, the ERA published a Notice of Proposed Consent Order and invited interested persons to comment on the proposed Order (43 FR 8005, February 27, 1978).

At the conclusion of the thirty-day comment period, the ERA had received no public comments; however, Wood filed an application for modification on March 3, 1978, seeking to stay the compliance and refund requirements of the proposed Consent Order. Wood argued that the permanent injunction entered by the District Court in *Energy Reserves Group, Inc.* v. *FEA*, 447 F. Supp. 1135 (D. Kan. 1978), constituted significantly changed circumstances under 10 CFR 205.135(b)(2). On January 26, 1978, the district court had permanently enjoined the ERA, as the FEA's successor, from enforcing FEA Ruling 1974-29 against the plaintiffs in that action.

On March 30, 1978, the DOE issued a Decision and Order denying the request for modification since Wood was not a party to the *Energy Reserves* litigation and thus failed to satisfy the standard for significantly changed circumstances under 10 CFR 205.135(b)(2). in addition, the Temporary Emergency Court of Appeals has reversed the district court's judgment and remanded the action for further proceedings (TECKA, Dkt. Nos. 10-15, 10-16, and 10-17; October 31, 1978) (2 Fed. Energy Guidelines Para. 26,112). Accordingly, the ERA has concluded that the Consent Order as executed between the FEA and Wood is an appropriate resolution of the compliance proceedings which it described, and it shall become effective as proposed, without modification, upon publication of this Notice.

Issued in Washington, D.C. on February 7, 1979.

BARTON ISENBERG,
*Assistant Administrator for Economic Rgulatory Administration Department of Energy.*

[FR Doc. 79-4935 Filed 2-14-79; 8:45 am]

---

[6712-01-M]

## FEDERAL COMMUNICATIONS COMMISSION

[FCC 79-77]

## TRT TELECOMMUNICATIONS CORP. ET AL.

### Tariff Revisions Purporting To Implement Flow Through of COMSAT Rate Reductions to the Public

In the matter of TRT Telecommunications Corporation, Transmittal Nos. 821, 823; RCA Global Communications, Inc., CC Docket No. 79-11, Transmittal No. 4411; ITT World Communications, Inc., CC Docket No. 79-12, Transmittal Nos. 2113, 2118, 2130, 2135; Western Union International, Inc., CC Docket No. 79-13, Transmittal Nos. 1289, 1297, 1306; and Cable and Wireless/Western Union International, Inc., CC Docket No. 79-14, Transmittal No. 179.

Adopted: February 6, 1979.

Released: February 9, 1979.

MEMORANDUM OPINION AND ORDER INSTITUTING INVESTIGATION AND HEARING

By the Commission:

1. We consider at this time TRT Telecommunications Corporation's (TRT) Transmittal Nos. 821 and 823, RCA Global Communications, Inc.'s (RCA) Transmittal No. 4411, ITT World Communications, Inc. (ITT) Transmittal Nos. 2113, 2118, 2130, and 2135, Western Union International, Inc. (WUI) Transmittal Nos. 1289, 1297, and 1306 and Cable and Wireless/Western Union International, Inc.'s (C&W/WUI) Transmittal No. 179. Each of these transmittals is filed to voluntarily implement rate reductions for international telex and leased channel services in accordance with the Commission's Memorandum Opinion and Order, FCC 78-312, Docket No. 16070, adopted May 9, 1978 and *ITT World Communications Inc.*, FCC 78-715, adopted October 5, 1978. ITT and RCA filed Petitions for Partial Rejection of TRT's transmittal, and ITT also filed a Petition for Partial Suspension and Investigation. The Department of Defense filed Petitions for Suspension and Investigation against all of the leased channel transmittals. Responsive pleadings followed.

BACKGROUND

2. In our May 9 Order, we concluded a 13 year proceeding to investigate Comsat's charges, practices, and regulations by accepting a Settlement Agreement negotiated by representatives of the Commission, Comsat, and other parties to the proceeding. The Settlement Agreement provided that Comsat would reduce its worldwide satellite facility revenues by 48.5%. Comsat thereupon filed revised tariffs implementing the agreement, establishing a single worldwide rate of $1575 per month per voice grade channel to all points served from U.S. earth stations with the exception of the U.S. Mainland/Puerto Rico route which is $970. This represented a reduction in rates along various routes of from 42% to 68% for Comsat's carrier customers, that is, the various international carriers. Comsat does not generally provide service directly to the ultimate consumer. Rather, it serves the international carriers which in turn provide service to the public. Therefore, the Settlement Agreement (in paragraph 3) also contained provisions designed to protect the interests of all parties, including ultimate consumers, pending voluntary flow through of the Comsat savings by the international carriers to the users or pending resolution of the flow through issues in Docket No. 20639. *American Telephone and Telegraph Company*, 56 FCC 2d 821 (1975), *pleading schedule and issues modified*, 67 FCC 2d 966 (1978). Thus, pending the outcome of Docket No. 20639, Comsat is to continue billing at its previous higher rates unless the carrier involved has agreed to flow through its savings to the user or place these

savings in escrow. In the meantime, Comsat is to place the difference between the old rate and the new rate in an interest bearing escrow account.

3. In *ITT World Communications*, we considered a flow-through tariff filed by ITT, and rejected it, on the grounds that the highly selective rate reductions were apparently discriminatory and that the filing in that context failed to comply with the requirements of Section 61.38 of the Commission's Rules. We also set out factors to aid carriers in refiling more acceptable voluntary flow through tariff revisions. Essentially, those factors are based on the considerations that we normally apply in reviewing tariff changes. The Chief of the Common Carrier Bureau, pursuant to delegated authority, thereafter rejected tariffs of the other international record carriers (IRCs) proposing largely identical flow through plans. In *American Telephone and Telegraph Co.*, FCC 78-802, adopted November 14, 1978, we allowed the message telephone service (MTS) flow-through plans for American Telephone and Telegraph Company, Hawaiian Telephone Company, and All America Cables and Radio, Inc. to go into effect.

THE PROPOSED TARIFF REVISIONS OF TRT

4. TRT was the first IRC to refile a flow through tariff.[1] The reductions it proposes are shown in the appendix. For telex, TRT in general proposes to 1) reduce all present $2.55 per minute rates to $2.50 (this includes most continental European routes and a few other points); 2) reduce all present $3.00 per minute rates for Atlantic basin countries to $2.90; 3) reduce all present $3.00 per minute rates for Pacific basin countries to $2.80; 4) reduce all $4.00 per minute rates to $3.60; and 5) reduce Puerto Rico originated telex rates which are presently $5.00 per minute to $4.00 per minute, and all $4.00 per minute rates to $3.60. With regard to leased channel service, TRT serves only a limited number of points in Latin America and Europe, plus Australia and the Philippines. It proposes the same reductions as in the earlier ITT filing. Essentially, it would 1) reduce European monthly rates from the present $4545 for a voice grade channel to $4225; 2) reduce all Latin American rates which are presently higher than $4460 to $4460; and 3) reduce the present $7900 monthly rate to Australia and the Phillippines to $6000.

5. In its support material TRT projects that for fiscal year 1979 its total savings in satellite facility costs would be $600,900 and that its total reduction to customers would be $831,900, which represents a 138% flow through. The reduction for telex would be $702,500 and the reduction for leased channel services $129,400. In its explanation of the proposed tariff, TRT states that it has attempted to consider and reconcile two sets of equities, that is, those among users of the various classes of services and those among the IRCs, which may generally be compelled by competitive necessity to match the lowest flow through rate proposed by any of the IRCs for each service. Thus, TRT claims to have used industry-wide data on market and service profitability to assure that no carrier would be required to provide any service at a loss, while proposing a more than 100% flow through to be assigned primarily to reductions to telex, which is the principal service provided by the IRCs and also the most profitable service on an industry-wide basis. TRT cites data submitted by the carriers in Docket No. 20778 which indicates that the overall industry rate of return for telex was 28.0% in 1976, while the overall industry return for leased channel service was only 3.3%. It accordingly proposes relatively greater reductions for telex and less for leased channel than would be indicated on the basis of the savings in satellite facilities costs directly attributable to each service.[2]

6. TRT justifies the differences in telex reductions, which range from $.05 to $.40 for mainland routes, or 2 to 10%, on a number of grounds. For countries with a $2.55 per minute rate, primarily Europe, TRT states that the lower reduction of $.05 or about 2% reflects the fact that it is one of the lowest rates already and has a lower return on investment than other telex routes. It explains the $.20 or 6.6% reduction in Pacific $3.00 rates and its $.10 or 3.3% reduction in Atlantic $3.00 rates on the grounds that the industry rate of return is highest for the Pacific region, and that region also had the greatest reduction in satellite circuit rates, 68%. Next, TRT states that the $.40 or 10% reduction in the $4.00 rate is an attempt to reduce the cost of communications between the U.S. and the developing countries who represent the great majority of countries with the $4.00 rate. Finally, it explains its reductions for Puerto Rico originated telex calls as following, where possible, the U.S. rate pattern.

7. For leased channels, TRT states that it has reduced the rates for its two Pacific routes by the greatest amount (from $7900 a month to $6000, or 24%) for the same reasons as in the case of telex, because present rates of return are highest and the Comsat reductions greatest. European routes would be reduced by 7%. For Latin America, TRT states that it believes there to be no basis for the existing large variation in leased channel rates (for example, Argentina and Columbia have rates of $6000 while their neighbors Brazil and Venezuela have rates of $4625) and has therefore proposed the general reduction in rates to $4460 for all of South America. Rates in Central America and the Carribean currently below $4460 would be left unchanged.

TRANSMITTALS OF ITT, RCA, WUI AND C&W/WUI

8. The transmittals of the other IRCs propose reductions which are largely identical with those of TRT. The major exception is that each of these carriers proposes to reduce $3.00 telex rates to the Pacific region to $2.90, rather than to $2.80 as proposed by TRT. Otherwise virtually all of their rates match TRT's where they provide the same services.[3]

9. There are a number of points to which the other carriers provide service which TRT does not serve, particularly for leased channel services. For such Pacific and Far Eastern points (Japan, Hong Kong, Singapore, Thailand, etc.) the monthly rate for a voice grade channel from the mainland is reduced from $7900 to $6000, matching the TRT reduction to Pacific points. For India, Indonesia, and Pakistan the carriers propose no reductions from their current $7500 rates. Similarly, leased channel rates to Africa and the Middle East, which are generally $4625, $4850 or $7500, would remain unchanged. For leased channel from Hawaii to points in the Pacific and Far East, rates would generally be reduced from current rates ranging from $4750 to $5375 down to $4600, though rates to Guam and New Zealand wold stay the same. The rate from the mainland to Guam would be reduced from $8210 to $7500. The rate from Guam to Far Eastern points would be reduced generally to either $5600 or $2800.[4]

[1] TRT's flow through proposal, like the other IRC proposals, deals only with the rate reductions reflecting future savings from the application of the new, lower Comsat rates. None of the IRCs have as yet submitted proposals for refunding monies now held by Comsat in escrow.

[2] TRT's figures indicate that its actual savings for telex would be roughly $280,000, its savings for leased channels roughly $295,000, and the remaining savings for telegram service about $30,000.

[3] One other difference is that WUI and C&W/WUI propose to reduce theleased channel rates between Puerto Rico and the mainland to $3500 per month. TRT and the other carries would offer no reduction, on the grounds that service will shortly be transferred from Comsat to a domestic satellite and that thte flow through of future Comsat rate reductions should not therefore apply to this service.

[4] FTC Communications, Inc. (FTCC) filed its proposed revisions on December 13, 1978. Inasmuch as the process of reviewing its flow-through plan is not complete, we will delegate to the Chief, Common Carrier

Footnotes continued on next page

PETITIONS TO SUSPEND AND REJECT

10. DOD contends that TRT and the other IRCs have not complied with the Commission's guidelines for flow through tariffs, by failing to provide sufficient explanation and detailed information and data to indicate a reasonable basis for its rate reductions and the numerous variations in the general applicability of those rates. DOD also claims that TRT fails to provide the "significant justification" required by the Commission for the variations in leased channel reductions. It notes, for example, that TRT proposes no reduction in leased channel rates to Ascension Island, Puerto Rico, or Central America, with little or no explanation. Finally, DOD contends that the support material does not comply with the requirements or the purpose of Section 61.38 of the Commission's Rules.

11. Both ITT and RCA argue in their Petitions that TRT's proposed reduction of $.20 for the Pacific $3.00 telex rate is unlawfully discriminatory and that the TRT proposal violates the Commission's guidelines. Both urge that the Pacific telex rate be rejected and ITT proposes, in the alternative, that it be suspended for the maximum statutory period and set for investigaton. Basically, they contend that the reduction in the Pacific $3.00 rate should only be $.10, matching the reduction in other $3.00 rates.

DISCUSSION

12. An examination of the tariff transmittals of TRT and the other carriers plainly shows definite improvements over the flow through tariffs we rejected earlier, both in terms of the support material filed and the apparent equity of the proposed reductions. These reductions are more evenly distributed and more adequately explained. This is particularly true for the case of telex. Under the prior transmittals, large reductions were proposed for low density routes but none at all for any of the major European or Pacific routes, and this apparent discrimination was unexplained. Reductions now would go to almost all routes, though the reductions still vary in size. To a certain degree, this variation appears intended to take into account the different rates of return for services to different regions, by in some cases proposing greater reductions for services which yield high returns and thus appear to be relatively overpriced. For leased channel services, the proposed reductions are almost identical to the earlier ITT proposal though some further explanation and justification of the proposed regulations has been provided. However, major omissions to flow through do remain, notably the unchanged rates for Africa and the Middle East.

13. As in the earlier filing, the current data supplied by the carriers seems to show that the proposed reductions would result in sufficient flow through of the Comsat rate reductions. As noted above, TRT's figures indicate that it would flow through 138 percent of its costs savings. The support material filed by the other carriers also indicates that their proposed reductions would result in at least 100 percent flow through, even with the higher $2.90 rate for Pacific telex.

14. There are three principal international record services, public telegraph, telex, and leased channel. For telegraph, TRT and the other carriers all propose no reductions, because the service presently operates at a loss and the actual reduction in costs is almost negligible.

TELEX

15. For telex, the reductions range from 2 to 10 percent for services from the mainland and Hawaii, and are overall significantly greater than the actual savings in costs for satellite facilities used for telex. For example, TRT's support material indicates that the total reduction in its telex rates for fiscal year 1979 would be $702,500 as compared to $129,400 in reduction for leased channel rates. In contrast, the savings directly attributable to facilities used for each is roughly equal. As TRT points out, data submitted by the carriers in Docket No. 20778, while not conclusive, indicates that in 1976 telex service earned a 28 percent rate of return, while leased channel service earned only 3.3 percent. This sort of disparity strongly suggests that telex is relatively overpriced and may be subsidizing the less profitable but currently more competitive leased channel services. TRT's own cost of service study projects that the effect of its flow through proposal would be to reduce its pre-tax rates of return for telex from 39.4 percent to 35.4 percen, while increasing its return on leased channel services from 11.8 percent to 17.6 percent. Its overall rate of return (which reflects taxes as well as losses from telegraph service) would be reduced from 13.4 percent to 12.1 percent. The other carriers also flow through relatively greater amounts to telex as compared to leased channel service. In this respect the transmittals conform with our previous statement that "it may be appropriate for carriers to consider giving more extensive rate reductions to services where revenues substantially exceed the carrier's average rate of return, and a lesser share to services whose existing rates yield a substantially smaller return." *ITT, supra,* at para. 30. In general, then, this proposed allocation of cost reductions for the benefit of the service with the highest rate of return, telex, somewhat less to the lower return service, leased channels, and none for telegraph, which operates at a loss, does not appear unreasonable.

16. The reductions proposed within each service category are questionable. For telex, mainland and Hawaii routes are reduced by 2 to 10% in most cases, while for a few routes no reductions would be offered. Essentially, the smallest reductions are proposed for routes with rates which are already lowest, the highest reductions for routes with the highest rates. Thus, the result is to reduce somewhat the present differences in telex rates for different routes. The smallest reduction would be in the present $2.55 rate, which TRT justifies as reflecting the current industry-wide rates of return for telex. In the studies submitted in Docket No. 20778, the industry rate of return for European telex was 25.3%, for Africa and the Near East 26.8%, for the Caribbean and Central America 29.0%, and for South America 33.0%. The difference between the European rate of return and those of the other regions is thus not great, but does lend some support to giving greater reductions to non-European routes. Because of traffic volume, the $.05 reduction also does result in a substantial decrease in overall revenues. Based upon the data filed by these four carriers, the $.05 reduction would mean a total reduction in telex costs for service to Europe of about $1.8 million in 1979. This is a significant part of the overall $10.4 million telex flow through proposed by the carriers, and increasing the reduction even to $.10 would greatly reduce the amount of flow through benefits available for the rest of the world, while assigning over a third of the total to European routes which already have some of the lowest rates.

17. The $.40 reduction in the current $4.00 rates can also be questioned, but generally does not appear unreasonable. It applies to 55 mostly small and remote African, Pacific, and Middle Eastern countries which generally have relatively little traffic, except for Saudi Arabia. TRT and the other carriers explain the reduction as an attempt to reduce the cost of communications between the U.S. and the developing countries. Service to these countries also has a relatively high rate of return and generally a higher usage of satellite facilities. The result is that the total 1979 flow through for U.S. originated telex traffic to these

Footnotes continued from last page

Bureau authority to act on its tariff revisions in a manner consistent with our action on the captioned applications.

countries would be about $2.2 million, again out of a total of $10.4 million.

18. As mentioned above, TRT and the other carriers part company in the case of the present $3.00 telex rates. TRT proposes to reduce Atlantic basin rates to $2.90 and Pacific basin rates to $2.80, while the other carriers propose a $2.90 rate for both. TRT states that the lower Pacific rate was proposed to reflect the fact the Comsat reductions were greatest in the Pacific and telex rates of return are also highest there. The overall reduction in satellite facility costs was 67.8% in the Pacific as compared to 41.6% in the Caribbean and Central America and 44.7% in the rest of the Atlantic basin. Present telex rates of return as reported by the carriers in Docket No. 20778 are 40.8% in the Pacific, much higher than the 19.8% to 33.0% returns reported for other regions. Thus, it appears that Pacific telex rates are relatively overpriced compared to other regions, and that the greater proportionate reductions in satellite costs for that area might well increase this gap, were the reductions to the public for both regions to be the same.

19. RCA and ITT argue that offering a $.10 reduction for $3.00 Atlantic rates and a $.20 reduction for $3.00 Pacific rates is discriminatory, predatory in effect, and not in compliance with the guidelines. ITT contends that the same principle of non-discrimination which was a basis for rejection of its earlier flow through tariff applies here, because, for example, the reductions represent for TRT a 128% flow through for Latin American telex and 246% for Pacific basin telex. It also contends that the TRT proposal fails to follow the alternatives for allocation of reductions suggested in the guidelines, particularly by using industry-wide rates of return as a basis for the reduction rather than TRT's own rate of return as the guidelines suggested. RCA argues that the lack of uniformity in the $3.00 rate is prima facie discriminatory, and that there is no reasonable basis for the disparity. It cites, for example, various costs which are higher for Pacific service as compared to Latin America. Further, it argues that TRT has structured its reductions in a manner designed to protect its own major market, Latin America, at the expense of its competitors who handle more of the Pacific traffic, and that the Pacific reduction is predatory in effect.

20. It is true, as the other carriers contend, that TRT has a relatively small part of Pacific traffic. It has also had direct service to the Pacific for only a short time. The $.20 reduction in Pacific telex would accordingly have a much greater effect on revenues of the other carriers than on TRT. Moreover, TRT has a quite high rate of return for Latin American services for which it proposes a smaller reduction. Nevertheless, the basic question is whether the proposed Pacific reduction is reasonable, and that in turn depends to some degree upon whether TRT can properly rely upon the high industry-wide rates of return and percentage reductions as a justification for its proposed reductions. Under the particular circumstances of this case, we believe that TRT can. Any final flow through plan among these carriers must inevitably recognize their competitive situations. Generally these carriers will match the rates of their competitors.[5] A flow through plan by a single carrier which takes into account only that carrier's services might be unrepresentative and hence ineffective as a basis for industry-wide flow through. There is accordingly a reasonable basis for TRT's claimed use of industry-wide data as a basis for its flow through proposal, for use of such data is more likely to provide a reliable basis for an industry-wide flow through. Moreover, turning to the particular rates at issue, there is no obvious reason why it is discriminatory to offer different reductions for Pacific telex rates than for some Atlantic basin rates which happen to be presently the same. In *ITT*, we suggested that carriers could consider different reductions for different basins, and also consider giving greater reductions to services with high rates of return. This is what TRT's proposal appears to do. Indeed, a more persuasive argument might be made that reduction of some Atlantic basin rates by $.05 and others by $.10 is less justifiable, yet the other carriers present no objection to that disparity.

21. As to RCA's claim that service to the Pacific is more costly, we are presented with no explanation of why, if this is so, the rate of return there is nonetheless significantly higher. Moreover, it may well be true that TRT will gain some competitive advantage from this rate, but it is difficult to see any public injury in an additional 3.3% reduction in the rates for services which presently appear to earn more than a 40% return, or any public benefit from requiring TRT to increase its proposed Pacific rate.[6] Certainly it is no part of the Commission's purpose to maintain rates which appear to be unnecessarily high in order to prevent revenue losses to the carriers who have obtained questionably high profits for a considerable length of time from those rates. In our view, the difference between these two reductions has a reasonable basis. We, accordingly, find no grounds for rejection of the proposed Pacific rate, nor sufficient cause for suspension and investigation. Subsequent to the filing of petitions against its Pacific Telax rate, TRT filed an application for special permission to modify its proposed tariff. It stated that it believed the Pacific telex reductions to be fully justified, but was reluctantly willing to change them to conform to those of the other carriers if the Commission was of the view that a consensus among the carriers was desirable to permit prompt implementation of flow through. Action on this request for special permission was deferred pending full consideration of TRT's filing. Since we find no adequate reason to suspend or reject the Pacific telex rates, and since TRT's stated reason for seeking special permission was to avoid any delay caused by such suspension or rejection, we will now dismiss TRT's application as moot.

22. Finally, there are a number of telex routes for which no reductions are proposed. These include, in the Caribbean, the $2.00 and $2.50 per minute rates to such points as the Bahamas and the Dominican Republic. TRT explains that it uses no satellite facilities in providing telex service to these points and therefore did not consider it appropriate to include them in the flow through of Comsat's rate reductions. The other major exception is the $2.00 per minute rate to the United Kingdom. TRT explains that it did not reduce this rate because past competitive rate filings already have reduced this rate to a level significantly below that of other European points, which will be $2.50 per minute after these proposed reductions. Although we would have perhaps preferred more detailed information concerning the United Kingdom case, these explanations do not appear to be unreasonable.

23. From our examination of these proposed tariffs, we conclude that the proposed reductions in telex rates are, on an overall basis, generally reasonable. The total amounts are adequate to provide even more than 100% flow through, and the reductions apply to almost all routes. Because there are a few routes which are excluded, and there exist substantial variations in the amounts of the reductions, we

[5] We do not know whether this practice of matching rates reflects a truly competitive market or whether it indicates an oligopolistic uniform pricing policy. While we intend to look into this practice in a future proceeding, we do not believe this question is relevent to the flow through of Comsat savings which is the subject of this proceeding.

[6] If indeed the IRCs are competitors as they claim, it would not be unusual, or contrary to the public interest, for one carrier to attempt to get a competitive advantage by offering a lower rate, particularly in an area where it is competitively weaker. Indeed we generally believe such competition is healthy and in the public interest. Our primary concern in this regard is to insure that competition is fair and that rates do not become unduly discriminatory.

would have wished for fuller explanation and justification of some of these differences and perhaps for some rate adjustments. Nonetheless, these are carrier-made rates and we must ask ourselves whether the problems presented are serious enough to warrant suspension and investigation. In general, we believe that further delay in the implementation of these reductions in telex rates is not necessary, and that the public interest would be better served by allowing the proposed reductions to become effective rather than by undertaking further proceedings concerning telex at this time. This, of course, does not preclude us from investigating the rate structure for international telex in a separate proceeding because the issues would be far broader than the question of whether the flow-through plans are reasonable. We also find no reason for suspending or rejecting TRT's proposed $2.80 rate for Pacific basin telex, and will therefore deny the petitions against it by RCA and ITT.

LEASED CHANNEL SERVICES

24. In its petitions for suspensions and investigation, DOD argues primarily that the carriers have failed to follow the Commission's guidelines for filing information in support of flow through tariff revisions. It notes, for example, that the carriers did not provide rate of return information in support of their claim that a greater proportionate share of flow through was allocated to telex, because telex earns a higher rate of return than leased channel service. These deficiencies have largely been remedied by information subsequently filed by the carriers. The additional information submitted by TRT, for example, does provide cost of service studies and rates of return on services, plus information showing the effect of its flow through proposal on its revenues and rates of return. In general, TRT's support information is adeuate, though further explanation of some of the variations in the proposed reductions would have been helpful.

25. Substantively, DOD argues that there is a substantial likelihood that a portion of the rates and charges proposed by TRT are unjust, unreasonable, and unlawfully discriminatory, noting that for some points TRT proposes no reductions at all.[7] DOD also contends that the proposed rates for all services offer the consumer substantially less than 100% flow through. As to the latter point, DOD is plainly incorrect, for the support data indicates that TRT and the other carriers would flow through significantly more than 100% overall. It is true that the proposed rates give greater reductions to telex than to leased channel services, but as our earlier discussion pointed out, this emphasis appears justifiable in light of the much higher rate of return earned by telex. The remaining question is whether the leased channel reductions are equitably allocated to the various routes served by TRT and the other carriers. On this point DOD notes that the proposed reductions are, with but a few exceptions, identical to those rejected in our earlier opinion and order. It also points out that the reductions are not across the board, whether world-wide or on an area-by-area basis, nor are they proportional to satellite facility costs and usage. Both of these patterns for reduction were suggested in *ITT*. However, those suggestions were not mandatory, but rather were intended to aid the carriers. The question to ask is whether the proposed reductions are properly justified and reasonable.

26. With regard to TRT, there are some parts of the world where it does not provide service, but it does propose reductions for almost all of its leased channel routes, though the reductions vary in size. It also provides further explanation of the proposed reductions. European monthly rates would be reduced from $4545 to $4225, or 7%. This matches the rate proposed by ITT in its rejected filing, but is somewhat higher than the earlier competitive filing by TRT. TRT now explains the reduction as reflecting the relatively low rate of return for European leased channel service. For Latin America, TRT's major market, leased channel rates which now vary from $4625 to $6000 per month would be reduced to $4460, a reduction of from 3.6 to 25.7%. Routes which presently have lower rates would be left unchanged. TRT states that it believes there is no basis for the existing large variations in leased channel rates. For example, service to Argentina, Bolivia, Columbia, and Peru currently costs $6000 per month per channel, while service to the neighboring countries of Brazil, Chile, Ecuador, and Venezuela cost only $4625, even through there is no apparent basis for this large difference. In our earlier opinion we expressed serious reservations about these proposed reductions, because they vary so greatly, because some are even greater reductions than the savings in satellite costs, and because none were explained. We would still have preferred a more detailed explanation of the underlying costs and revenues associated with providing these services. However, it does appear that the disparities in the levels of these leased channel reductions reflects a rationalization of existing, unnecessary disparities in rates, and that the overall reductions are substantial. Despite our earlier reservations, therefore, these differences in reductions do appear to have a reasonable basis.

27. There are a few routes in the Caribbean and Central America, plus Ascension Island in the Atlantic, for which TRT proposes no reductions. The rates for those points are all below the proposed $4460 rate. For example, Honduras, Nicaragua, and Panama have a $3725 rate. TRT states that it did not reduce those rates because they are already significantly lower than other leased channel rates in Latin America. Again, we would prefer a more complete explanation of the exclusion of these routes from flow through reductions. It does appear, however, that there is a reasonable basis for reducing the price of the most expensive services in the region in preference to the services which have lower rates, particularly in view of the distance-insentitive nature of satellite communications facilities which are used provide a large part of these services.

28. TRT's other leased channel services are to Australia and the Philippines. Those rates would be reduced from $7900 to $6000, or 24%. This is a much larger reduction than for other areas, but the reduction in satellite costs was greatest in the Pacific, and leased channel rates of return are highest there, based upon Docket No. 20778 material. Accordingly, this reduction does not appear to be unreasonable.

29. The other carriers propose the same reduction formula as TRT for European, Latin American, and Pacific routes, including some routes in those areas which TRT does not serve. For example, rates from West Coast gateways to Japan, Hong Kong, Singapore, and other Far Eastern points would also be reduced from $7900 to $6000 a month. Service to Guam would be reduced from $8210 to $7500. For India, Indonesia, and Pakistan, the rate would remain at the current $7500 because, as the carriers explain, service to those points is via cable and the Indian Ocean satellite, facilities not affected by the Comsat rate reductions. For leased channel service from Hawaii, present rates to points in the Pacific and Far East range from $4750 to $7100. Most of these rates would be reduced to $4600, reductions of 3 to 14%, though no reductions are proposed for Guam or New Zealand. ITT proposes to reduce the present $5100 rate from Hawaii to Australia to $3975

[7] In treating DOD's petition we recognize that DOD is by far the largest private line customer of the IRCs. It therefore has considerable market power such that it has apparently successfully influenced carriers to offer very low private line rates to those points where DOD has significant service requirements. Therefore, variant private line rate patterns to many parts of the world may reflect, in part, the influence of DOD.

to reflect charges quoted in a competitive government bid.

30. From Guam, ITT proposes to reduce the present $8700 rate for Singapore and $5750 rate for Australia to $5600. Rates for other Far Eastern points, which presently vary from $3200 to $4775, would be reduced to $2800. The other carriers largely match these rates, except that WUI proposes to reduce the Singapore rate to $2800 and the Japan rate to $2010. RCA, which was the first to file these rates, states that it attempted to develop uniform and composite rate levels, taking into account not only the amounts of the Comsat rate reductions, but also the relative costs of cable facilities and operating expenses.

31. In general, the reductions proposed for these routes do not appear to be unreasonable with the exception of the rates from Hawaii and Guam which are submitted without much explanation and with some anomalies. Also, ITT's rate reduction from Hawaii to Australia seems excessive in Comparison to other reductions in the Pacific.

32. The remaining regions, that is, Africa and the Middle or Near East, present the most significant concerns. Neither ITT, RCA, or WUI proposes any reduction for leased channel service to this part of the world, with the exception of Israel. (TRT and C&W/WUI do not provide leased channel service to these areas.) In addition, both ITT and RCA, which provide service from Hawaii to New Zealand and Guam, did not reduce the leased channel rates.

33. ITT explains its failure to propose any Middle East reductions on the grounds that it has experienced relatively little demand for such services, and that leased channel service is, or would be, via varying mixes of overseas circuit facilities involving different costs. For example, some may be via cable to a European point and then up to an Intelsat Indian Ocean satellite, the rates for which have not been reduced; others may be via cable links, and still others by direct satellite transmission.

34. We are thus presented with some very limited explanation of the failure to offer any reduction in leased channel services to this region of the world, but that explanation is insufficient, relying as it does upon claims that reductions for this region would be somehow difficult and minimal. Moreover, in our view, these explanations fall well short of the significant justification for disparities in rates which in *ITT* we stated was necessary and are simply unpersuasive and unacceptable. In the African and Middle Eastern region, present rates are almost all either $7500, for points served by the Indian Ocean satellite, or $4850 for certain Middle Eastern points, or $4625, which appears to apply to all countries with direct service via the Atlantic satellite. With regard to the $7500 rates for India, Pakistan, Indonesia, and some Middle Eastern points, the carriers explain that no Comsat facilities are used to provide the service, which is via Atlantic cable and the Indian Ocean Satellite. Presumably, the same explanation applies to some of the African countries which also have the $7500 rate. Since the Comsat facilities subject to rate reductions are not used to provide these services, it would not appear unreasonable to exclude them from flow through. However, we perceive no reason whatever why rates for routes to the Middle East and Africa which do use Comsat facilites are somehow more difficult to reduce than rates to other countries in other parts of the world. Table 3 of the appendix shows the services in these regions which would receive no reduction from ITT, RCA, or WUI. Jordan and Lebanon have a $4850 rate, Dubai a $6000 rate, and Libya, which has no voice grade service, has a full speed rate of $3500, which would be equivalent to a voice grade rate of $8750. For Israel, ITT offers a $6000 rate, RCA would reduce this to $5625, and WUI would reduce it still further to $4850, matching neighboring Jordan and Lebanon. These are the only reductions proposed in the Middle East or Africa.

35. It might well be justifiable to propose different reductions for some of these routes, which do apparently use varying mixes of facilities. But that is no explanation of the failure to offer any reduction at all, particularly in the case of the rates for service to the 11 African and Middle Eastern countries which presently have a $4625 rate and which apparently receive service directly via the Atlantic satellite.[8] The information submitted by the carriers in Docket No. 20778 indicates that African and Near Eastern leased channel services earned a 5.3% after tax rate of return, higher than the rate for Europe or the Caribbean and Central America, and satellite facility costs were reduced by the same amount as for Europe. There would thus appear to be no reason why these rates should not be reduced by at least as much as European rates. The fact that there may be relatively few circuits to these countries certainly does not justify excluding those few customers from reductions in which they are entitled to share, and denying those reductions to any future customers for those services as well. The fact that there are few circuits also indicates that reasonable reductions for the region would not increase the total flow through by these carriers significantly above the levels they already propose. We are thus presented with no reasonable justification for the discrimination apparent in the exclusion of service between the U.S. and these regions from any share in the flow through reductions.

36. With the exceptions noted above, the leased channel reductions, in light of the supporting data and explanation, appear to be within the realm of reasonableness. As in the case of telex, we would have preferred more complete explanation and justification of some of the variations in these reductions or rate adjustments. Nonetheless, they do appear, at least on the surface to offer reasonably consistent rate schemes and rate reductions.

37. However, the leased channel rates for ITT, RCA, and WUI discussed in paragraphs 32-35, *supra*, do present a problem. These IRCs have made no significant effort to explain the lack of reductions for private line routes to Africa and the Middle East. Nor have they explained the reason for not reducing private line rates from Hawaii to New Zealand and Guam.[9] Thus this part of the flow through plan raises a substantial question as to whether the proposed rates are in violation of Sections 201(b) and 202(a) of the Communications Act of 1934.

38. Indeed, the conduct and motivation of RCA, ITT and WUI with respect to the flow through of cost reductions to their private line customers is highly suspect. The Chief, Common Carrier Bureau, in a letter to all international carriers dated June 23, 1978, indicated a belief that "while all services should generally benefit from flow through . . ., rate reductions do not necessarily have to be uniform." But he went on to say that "all the rationale and reasoning supporting the carriers' rate reductions should be supplied and any variations in general applicability explained." Later, in *ITT World Communications, supra*, following rejection of the initial flow through IRC tariff, primarily for fail-

[8] The Common Carrier Bureau attempted by letter to solicit additional justification for these areas, among others, but the carriers supplied no significant additional support.

[9] Although our primary concern is with the failure of the carriers to propose any reductions for leased channel rates to the Middle East and Africa, and from Hawaii to Guam and New Zealand, we also have serious reservations concerning the large reductions in leased channel rates proposed by ITT from Hawaii to Australia. This rate was proposed after the fact to match the carrier's winning competitive bid for a government contract. We also note that WUI and C&W/WUI are proposing a similar large reduction, to match a government bid, for leased channel service between the mainland and Puerto Rico, but that proposal was filed separately from flow through and is still under consideration.

ure to adequately support the wide variation in rate reductions (or non-reductions), we specifically stated, at para. 32 in guidance to the carriers:

> With respect to rate reductions within a service category, we believe they should generally be more uniform. Specifically, it appears to us that, absent significant justification, reductions should be across the board for each service, either world-wide or within the Comsat service areas subject to reduction.

Following the filing of the instant tariff revisions, the Bureau again requested in letters to RCA, ITT and WUI justification for failure to propose reductions to all points of service. In response, these carriers virtually ignored the Bureau's requests in this regard.

39. Therefore, based on this record as it applies to private line rates, it appears that these carriers have refused suggestions as to the need for reasonable uniformity of flow through rate reductions and repeated requests for significant justification for failure to do so. Accordingly, if the investigation instituted herein reveals the carriers' approach to have been unlawful, we plan to review the conduct of these carriers to determine if monetary forfeiture under Sections 202(c) and/or 503(b) of the Communications Act, 47 U.S.C. 202(c) and 503(b), may be appropriate.

40. However, we do not believe that the apparent violation of Section 202(a) requires our summary rejection of these leased channel tariff filings.[10] We also do not wish to further delay passing on the customers the benefits of lower rates. Therefore, we believe the best course of action is to investigate the reasonableness of the private line tariff reductions of ITT, RCA, and WUI, but without suspension of the tariffs' effectiveness. We will conduct an expedited paper hearing for the purpose of rapidly addressing the apparent discrimination in these carriers' private line reductions. This does not imply that the base rates are lawful. Indeed, after review of the information submitted in connection with the International Audit, Docket No. 20778, 59 FCC 2d 240 (1976), we are concerned about rates of return for various services and routes, and in some cases with rate structure problems. However, exploration of such matters would obviously be complex and time consuming. Therefore, they will be considered separately in other proceedings. Any customers whom we determine were improperly denied a rate reduction can pursue a remedy by way of a complaint to the Commission or a suit for recovery of damages, pursuant to Sec. 207 of the Act.

41. In order to develop a more complete record for this hearing ITT, RCA, and WUI will be required to submit the following information:[11]

(a) A list of overseas points served by each of the carriers for which Comsat satellite service is used, including a breakdown into direct and transiting traffic. This should include instances where the tariff lists a point for which there are presently no customers, but, if there were customers, Comsat facilities would be used.

(b) The facilities mix (Comsat service, non-Comsat satellite service, and cable) by number of circuits used in private line communications to each overseas point. For points where the tariff lists a rate, but there are presently no customers, the carrier should give the facilities mix that would be used if there were customers.

(c) The private line rates prior to the proposed reductions, including the amount of reduction in rates by rate area. In addition supply the old and new Comsat rates for each rate area and the difference between these rates.

(d) The rate base, expense, income, and rate of return information for each route. This information should be divided into direct and indirect costs, and the method of distributing indirect costs should be fully described. Because the same facilities are used for telex, private line and public telegraph service, we would expect information showing the division of costs between service categories. For points that are not presently served, but are listed in the tariff, we would expect projections of what the expense, income, rate base and rate of return information would be if there were customers.

42. Because of the large number of participants in the proceeding and the potential for conflicts between them, we believe that it is appropriate for an Administrative Law Judge to preside over the proceeding. Any such conflicts that may result shall immediately be brought before the Judge, and the Judge shall promptly convene a conference of the parties and issue an immediate ruling on the matter. In order that the Commission may issue a final decision as soon as possible, the Judge shall not issue an Initial Decision, but instead shall certify the record of the proceeding to the Commission.

43. As indicated in paragraph 2, *supra*, Comsat is required to continue billing each international carrier at the old, higher rates until such time as it is advised by the Commission that such carrier has filed an acceptable flow through tariff. The Chief of the Common Carrier Bureau will direct Comsat to bill TRT, ITT, RCA, WUI, and C&W/WUI at the new, lower rate at the time their flow through tariffs become fully effective or as soon as practicable thereafter.

44. One other matter needs addressing in connection with these tariff filings. In none of the support information did the various IRCs predict any change in utilization of facilities that may result from the new lower rates. However, it is likely that lower rates will result in stimulation of international communications traffic, particularly for telex. Since such stimulative effect is an important consideration for rate making purposes, we believe greater efforts should be made by carriers to collect and analyze relevant data in this regard. We are therefore requiring the IRCs to capture the information necessary to calculate the elasticity of demand for each major service category. To be consistent, the period over which quantities are demanded should be measured 12 months before and 12 months after the rate change, thus minimizing any seasonal variations. The carriers shall file this information as a report, and the report shall contain adjustments for the historic growth in communications services.[12]

45. In view of the foregoing, *it is ordered*, That, pursuant to Sections 4(i), 4(j), 201, 202, 203, 204, 205 and 403 of the Communications Act of 1934, as amended, and investigation and hearing shall be conducted into the following leased channel tariff schedules:

(a) Transmittal No. 4411, RCA Global Communications, Inc., FCC Tariff No. 58;

(b) Transmittal Nos. 2113, 2118, 2130 and 2135, ITT World Communications Inc., FCC Tariff No. 43; and

(c) Transmittal Nos. 1289, 1298, and 1306, Western Union International, Inc., FCC Tariff No. 3.

46. *It is further ordered*, That the hearing shall include consideration of the following issues:

(a) whether the reductions in charges (or lack thereof) for leased channel services as published in the

[10] While we are inclined to believe the record before us would support rejection of the private line rates as unlawfully discriminatory on their face in violation of Section 202(a) of the Act, we have the authority not to exercise the power of rejection, within reasonable limits. See *Municipal Light Boards* v. *F.P.C.*, 450 F. 2d 1341 (D.C. Cir. 1971); *American Farm Lines* v. *Black Ball Freight Services*, 397 U.S. 532 (1970). We believe, as indicated above, that the overall public interest is better served by allowing these rate reductions to the majority of users to take effect.

[11] The Administrative Law Judge is empowered to alter information requirements and decide upon any reasonable substitute requirements, if it can be demonstrated that all of these information requirements cannot be reasonably met within the time frame specified in para. 52, infra.

[12] By letter, the Chief, Common Carrier Bureau will request similar information from those carriers providing international MTS.

aforesaid tariffs are or will be unjust and unreasonable within the meaning of Section 201(b) of the Act;

(b) whether such reductions in charges will or could be applied to subject any person or class of persons to unjust or unreasonable discrimination or give any undue or unreasonable preference or prejudice to any person, class of persons, or locality, within the meaning of Section 202(a) of the Act; and

(c) if any of such reductions in charges are found to be unlawful, whether the Commission should, pursuant to Section 205 of the Act, prescribe reduced charges to properly reflect the flow through of Comsat savings, and if so, what reductions should be prescribed.

47. *It is further ordered,* That, with respect to issues (a) and (b), the burden of introduction of evidence and burden of proof are placed upon the proponents of each of the tariff revisions.

48. *It is further ordered,* That RCA Global Communications, Inc., ITT World Communications, Inc., Western Union International, Inc., and the Department of Defense are named parties to this proceeding.

49. *It is further ordered,* That a separated Trail Staff of the Common Carrier Bureau shall participate in the above captioned proceeding. The Chief, Hearing Division of the Common Carrier Bureau and his staff will be separated in accordance with § 1.209 of the Commission's Rules.

50. *It is further ordered,* That the hearing shall be presided over by an Administrative Law Judge who shall be specified in a subsequent order. The Commission has determined, pursuant to § 1.274 of the Rules, that due and timely execution of its functions imperatively and unavoidably requires that an intitial decision not be issued herein. The presiding officer shall accordingly certify the record to the Commission promptly upon completion of the procedures specified in paragraph 52 herein.

51. *It is further ordered,* That anyone wishing to actively participate in the hearing who has not been named as a party may do so by filing a notice of appearance with the Commission and with all parties of record within 20 days of the release date of this order.

52. *It is further ordered,* That the hearing shall be pursuant to the procedures and time periods specified below:

(a) Within 25 days after the release date of this order, ITT, RCA, and WUI, shall present their direct cases on the lawfulness of their tariff revisions and shall file the information requested in paragraph 41, *supra.*

(b) Within 20 days after the filing date for (a), all parties shall present their responsive cases.

(c) Within 10 days after the filing date for (b), ITT, RCA, and WUI shall present their rebuttal cases.

(d) Within 30 days after the filing date for (c), all parties shall file their proposed findings of fact and conclusions of law addressing all matters set for briefing and investigation.

(e) Within 10 days after the filing date for (d), all parties shall file their reply findings of fact and conclusions of law.

(f) Requests for information shall be made anytime until 15 days before the proposed findings of fact and conclusions of law are due to be filed. In order to expedite the proceeding, the response periods for these requests shall be reasonably brief. All information requests and responses shall automatically be entered into the record. Any conflicts concerning requests for information shall immediately be brought to the attention of the Administrative Law Judge who shall promptly convene a conference of the parties and issue an immediate ruling on the conflicts.[13]

(g) As in previous proceedings where we have ordered all evidence to be received initially in writing, we direct the presiding officer herein to convene an oral hearing to the extent required to avoid significant prejudice to any party. See, e.g., *AT&T,* 45 FCC 2d 88 (1974). Any request for an oral hearing should specify the issue to be addressed and identify the witness to be cross-examined. We would not expect that an oral hearing would normally be implemented unless it can be shown that a disputed fact is critical to the resolution of the issues involved.

53. *It is further ordered,* That the Petitions for Partial Rejection and the Petitions for Suspension and Investigation filed by ITT World Communications, Inc. are denied.

54. *It is further ordered,* That the Petitions for Suspension and Investigation filed by the Department of Defense are denied.

55. *It is further ordered,* That Special Permission Application No. 271 of TRT Telecommunications Corporation is denied.

56. *It is further ordered,* That the Communications Satellite Coporation shall bill TRT Telecommunications Corporation at the new lower rate, effective January 18, 1979, and shall bill RCA, WUI, and ITT at the lower rate as directed by letter from the Chief, Common Carrier Bureau.

57. *It is further ordered,* That, within 14 months of the release date of this order ITT, WUI, C&W/WUI, RCA, and TRT shall file with the Commission a report of their elasticity studies for telex and leased channel services as described in paragraph 43.

58. *It is further ordered,* That the Chief, Common Carrier Bureau is delegated authority to act on Transmittal No. 38, FTC Communications, Inc., FCC Tariff Nos. 16 and 17, in a manner consistent with our action herein.

59. *It is further ordered,* That the Secretary shall cause a copy of this order to be published in the FEDERAL REGISTER.

FEDERAL COMMUNICATIONS COMMISSION.,
WILLIAM J. TRICARICO,
*Secretary.*

[13] Alternative flow through plans may be filed with the Commission. They must be accompanied by a request for a waiver of Section 61.59(a) of the Commission's Rules. As is usually the case, the Chief, Common Carrier Bureau, shall rule on any such requests for waiver. If the alternative plans prove to be satisfactory, we may terminate the investigation.

TABLE 1.—*Present and Proposed TRT Voice Grade Private Line Rates**

[Rates for full-time service per month per channel.]

| Area served | Present rate | Proposed rate | Reduction | Reduction (percent) |
|---|---|---|---|---|
| Europe | $4,545 | $4,225 | $320 | 7 |
| South America | 4,625 | 4,460 | 110 | 3.5 |
| | 6,000 | 4,460 | 1,560 | 26 |
| Carribean, Central America | 2,500-5,000 | 2,500-4,460 | 0-540 | 0-10.8 |
| Australia and Phillippines | 7,900 | 6,000 | 1,900 | 24 |

*Rates for telegraph-grade leased channels are proportional to voice grade rates. For example, the full speed or 50 baud rate is 40 percent of the voice grade rate, the half speed rate is two-thirds of the full speed rate, the quarter speed rate is 40 percent of the full speed rate, and the 75 baud rate is 110 percent of the full speed rate.

TABLE 2.—*Present and Proposed TRT Telex Rates, Per Minute*

| Area served | Present rate | Proposed rate | Reduction | Reduction (percent) |
|---|---|---|---|---|
| Africa | $4.00 | $3.60 | $0.40 | 10 |
| | 3.00 | 2.90 | .10 | 3.3 |
| Europe | 2.55 | 2.50 | .05 | 2 |
| | 3.00 | 2.90 | .10 | 3.3 |
| Middle East incl. N. Africa | 4.00 | 3.60 | .40 | 10 |
| | 3.00 | 2.90 | .10 | 3.3 |
| South and Central America | 3.00 | 2.90 | .10 | 3.3 |
| Carribean | 2.00 | 2.00 | 0 | 0 |
| | 2.50 | 2.50 | 0 | 0 |
| | 3.00 | 2.90 | .10 | 3.3 |
| Pacific and Far East | 3.00 | 2.80 | .20 | 6.6 |
| | 4.00 | 3.60 | .40 | 10 |
| United Kingdom | 2.00 | 2.00 | 0 | 0 |

TABLE 3.—*Leased Channel Services to the Middle East and Africa. No Rate Reduction Is Proposed (Monthly Rates for Voice Grade Channels)*

| Country | Carriers | | |
|---|---|---|---|
| | ITT | WUI | RCA |
| Algeria | $4,625 | **$4,625 | $4,625 |
| Bahrain | 7,500 | | |
| Dubai | | | 6,000 |
| Egypt | 4,625 | 4,625 | 5,000 |
| Iran | 4,625 | 4,625 | 4,625 |
| Iraq | | 4,625 | |
| Ivory Coast | | | 4,625 |
| Jordan | | | 4,850 |
| Kenya | 7,500 | **7,500 | 7,500 |
| Kuwait | **9,000 | | |
| Lebanon | 4,850 | 4,850 | 4,850 |
| Liberia | | | 4,625 |
| Libya | **8,750 | **8,750 | **8,750 |
| Malagassy | | 4,625 | 4,625 |
| Morocco | 4,625 | 4,625 | **4,625 |
| Nigeria | 4,625 | 4,625 | 4,625 |
| Saudi Arabia | 7,500 | 7,400 | |
| (or direct) | 4,625 | 4,625 | 4,625 |
| Senegal | | | 4,625 |
| South Africa | 7,500 | **7,500 | |
| Zaire | 7,500 | | **7,500 |
| Zambia | | | 7,500 |

**Denotes that carrier does not provide voice grade channels but does provide telegraph grade channels at a rate equivalent to the listed voice grade rate.

[FR Doc. 79-4934 Filed 2-14-79;8:45 am]

[6210-01-M]

## FEDERAL RESERVE SYSTEM

### CUBA BANCORPORATION

#### Formation of Bank Holding Company

Cuba Bancorporation, Cuba, Illinois, has applied for the Board's approval under § 3(a)(1) of the Bank Holding Company Act (12 U.S.C. § 1842(a)(1)) to become a bank holding company by acquiring 80 per cent or more of the voting shares of State Bank of Cuba, Cuba, Illinois. The factors that are considered in acting on the application are set forth in § 3(c) of the Act (12 U.S.C. § 1842(c)).

The application may be inspected at the offices of the Board of Governors or at the Federal Reserve Bank of Chicago. Any person wishing to comment on the application should submit views in writing to the Reserve Bank, to be received not later than March 7, 1979. Any comment on an application that requests a hearing must include a statement of why a written presentation would not suffice in lieu of a hearing, identifying specifically any questions of fact that are in dispute and summarizing the evidence that would be presented at a hearing.

Board of Governors of the Federal Reserve System, February 8, 1979.

GRIFFITH L. GARWOOD,
*Deputy Secretary of the Board.*

[FR Doc. 79-4904 Filed 2-14-79; 8:45 am]

[6210-01-M]

### GARY-WHEATON CORP.

#### Proposed Acquisition of G-W Life Insurance Co.

Gary-Wheaton Corporation, Wheaton, Illinois, has applied, pursuant to section 4(c)(8) of the Bank Holding Company Act (12 U.S.C. § 1843(c)(8)) and § 225.4(b)(2) of the Board's Regulation Y (12 CFR § 225.4(b)(2)), for permission to acquire voting shares of G-W Life Insurance Company, Phoenix, Arizona, a proposed new corporation.

Applicant states that the proposed subsidiary would engage in the activity of underwriting, as reinsurer, credit life and credit accident and health insurance directly related to extensions of credit by Applicant's banking subsidiary, the Gary-Wheaton Bank, Wheaton, Illinois. This activity would be performed from offices of Applicant's subsidiary in Phoenix, Arizona, and the geographic area to be served is the Chicago banking market. This activity has been specified by the Board in section 225.4(a) of Regulation Y as permissible for bank holding companies, subject to Board approval of individual proposals in accordance with the procedures of section 225.4(b).

Interested persons may express their views on the question whether consummation of the proposal can "reasonably be expected to produce benefits to the public, such as greater convenience, increased competition, or gains in efficiency, that outweigh possible adverse effects, such as undue concentration of resources, decreased or unfair competition, conflicts of interests, or unsound banking practices." Any request for a hearing on this question must be accompanied by a statement of the reasons a written presentation would not suffice in lieu of a hearing, identifying specifically any questions of fact that are in dispute, summarizing the evidence that would be presented at a hearing, and indicating how the party commenting would be aggrieved by approval of the proposal.

The application may be inspected at the offices of the Board of Governors or at the Federal Reserve Bank of Chicago.

Any views or requests for hearing should be submitted in writing and received by the Secretary, Board of Governors of the Federal Reserve System, Washington, D.C. 20551, not later than March 8, 1979.

Board of Governors of the Federal Reserve System, February 8, 1979.

GRIFFITH L. GARWOOD,
*Deputy Secretary of the Board.*

[FR Doc. 79-4905 Filed 2-14-79; 8:45 am]

[4210-01-M]

## DEPARTMENT OF HOUSING AND URBAN DEVELOPMENT

### Federal Disaster Assistance Administration

[Docket No. NFD-665; FDAA-571-DR]

### NEW MEXICO

#### Major Disaster and Related Determinations

AGENCY: Federal Disaster Assistance Administration.

ACTION: Notice.

SUMMARY: This is a Notice of the Presidential declaration of a major disaster for the State of New Mexico (FDAA-571-DR), dated January 29, 1979, and related determinations.

DATED: January 29, 1979.

FOR FURTHER INFORMATION CONTACT:

John Perry, Program Support Staff, Federal Disaster Assistance Administration, Department of Housing and Urban Development, Washington, D.C. 20410 (202/634-7625).

NOTICE: Pursuant to the authority vested in the Secretary of Housing and Urban Development by the President under Executive Order 11795 of July 11, 1974, and delegated to me by the Secretary under Department of Housing and Urban Development Delegation of Authority, Docket No. D-74-285; and by virtue of the Act of May 22, 1974, entitled "Disaster Relief Act of 1974" (88 Stat. 143); notice is hereby given that on January 29, 1979, the President declared a major disaster as follows:

I have determined that the damage in certain areas of the State of New Mexico resulting from flooding beginning about December 19, 1978, is of sufficient severity and magnitude to warrant a major disaster declaration under Public Law 93-288. I therefore declare that such a major disaster exists in the State of New Mexico.

Notice is hereby given that pursuant to the authority vested in the Secretary of Housing and Urban Development under Executive Order 11795, and delegated to me by the Secretary under Department of Housing and Urban Development Delegation of Authority, Docket No. D-74-285, I hereby appoint Mr. Joe D. Winkle of the Federal Disaster Assistance Administration to act as the Federal Coordinating Officer for this declared major disaster.

I do hereby determine the following areas of the State of New Mexico to have been adversely affected by this declared major disaster.

The Counties of:

| | |
|---|---|
| Catron | Lincoln |
| Grant | Sierra |
| Hidalgo | |

(Catalog of Federal Domestic Asst. No. 14.701, Disaster Asst.)

WILLIAM H. WILCOX,
*Federal Disaster Assistance Administration.*

[FR Doc. 79-4922 Filed 2-14-79; 8:45 am]

[4310-84-M]

## DEPARTMENT OF THE INTERIOR

### Bureau of Land Management

[Group 604]

### ARIZONA

#### Filing of Plat of Survey

FEBRUARY 9, 1979.

1. Plat of survey of lands described below will be officially filed in the Arizona State Office, Phoenix, Arizona, effective at 10:00 A.M., on March 28, 1979.

GILA AND SALT RIVER MERIDIAN, ARIZONA

T. 26 N., R. 31 E.

A dependent resurvey of a portion of the east boundary of T. 26 N., R. 30 E., designed to restore the corners in their true and original location, and a survey of a portion of the east boundary of T. 26. N., R. 30 E., and the survey of the boundaries and subdivisional lines of Sec. 7, T. 26 N., R. 31 E., Gila and Salt River Meridian, Arizona.

2. The land encompassed in this survey is located at Window Rock, Arizona. The general elevation ranges from 6670 to 6800 feet above sea level. The soil is a sandy loam. Access is by way of Highway No. 12 and 264, and numerous unimproved or lightly gravelled roads.

3. The vegetation consists of sage brush, scattered cedar and pinyon.

4. There is no evidence of mining activity or minerals.

5. The lands in the area of this survey lie within the Navajo Indian Reservation.

ROBERT L. PETERSON,
*Chief, Branch of Records and Data Management.*

[FR Doc. 79-4908 Filed 2-14-79; 8:45 am]

---

[4310-84-M]

[N-4700]

### NEVADA

#### Proposed Withdrawal and Opportunity for Public Hearing

FEBRUARY 5, 1979.

The Department of Agriculture, U.S. Forest Service, filed an amendment to application N-4700 on November 22, 1978, for the withdrawal of the public land described below from settlement, sale or entry under the public land laws, but not the mining and mineral leasing laws.

MOUNT DIABLO MERIDIAN

T. 25 N., R. 57 E.,
Sec. 3, Lots 2, 3, 4, SW¼NE¼, S½NW¼, SW¼, NW¼SE¼, S½SE¼;
Sec. 10, All.
T. 26 N., R. 57 E.,
Sec. 1, Lots 6, 7, 8, 10, 11, 12, 13, 14, SW¼NW¼, SW¼SW¼;
Sec. 11, NE¼, NW¼SE¼;
Sec. 14, NW¼;
Sec. 15, SE¼;
Sec. 22, NE¼, N½SE¼, SW¼SE¼;
Sec. 27, W½E½, SW¼;
Sec. 34, W½.
T. 27 N., R. 57 E.,
Sec. 12, E½;
Sec. 13, E½;
Sec. 24, NE¼;
Sec. 25, Lots 1, 3, NW¼NE¼NW¼NE¼, S½NE¼NW¼NE¼, W½NW¼NE¼, SE¼NW¼NE¼, SW¼SE¼;
Sec. 36, NW¼NE¼, S½NE¼, N½SE¼, SW¼SE¼.
T. 28 N., R. 56 E.,
Sec. 13, E½;
Sec. 24, E½;
Sec. 26, SE¼;
Sec. 35, E½.
T. 28 N., R. 58 E.,
Sec. 5, W½NE¼, SE¼;
Sec. 8, E½;
Sec. 9, W½W½W½;
Sec. 17, NE¼, N½SE¼, SW¼SE¼;
Sec. 20, W½NE¼, NW¼SE¼;
Sec. 29, W½;
Sec. 30, SE¼;
Sec. 31, NE¼, E½SE¼;
Sec. 32, W½.
T. 29 N., R. 58 E.,
Sec. 3, NE¼, N½SW¼, SW¼SW¼;
Sec. 10, W½NW¼, NW¼SW¼;
Sec. 16, NE¼, W½SE¼;
Sec. 21, W½W½NE¼, W½;
Sec. 28, W½NW¼;
Sec. 29, NE¼, N½SE¼, SW¼SE¼;
Sec. 32, W½E½.
T. 30 N., R. 57 E.,
Sec. 29, SE¼NE¼, SE¼SW¼, SE¼;
Sec. 32, E½NW¼.
T. 30 N., R. 58 E.,
Sec. 13, SE¼;
Sec. 24, Lots 1, 2, 3, E½NE¼, SW¼, NE¼SE¼;
Sec. 25, W½NW¼;
Sec. 26, Lots 1, 2, 3, 4, 5, W½NE¼, NW¼, N½SW¼, NW¼SE¼;
Sec. 35, Lots 2, 3, 4, 5, 7, 8, W½SW¼.
T. 30 N., R. 59 E.,
Sec. 7, NE¼, N½SE¼, SW¼SE¼;
Sec. 18, Lot 4, W½E½, NW¼, N½SW¼, SE¼SW¼;
Sec. 19, Lots 1, 2, 3, E½NW¼.
T. 31 N., R. 57 E.,
Sec. 10, Lots 2 and 3;
Sec. 33, E½E½, SW¼NE¼, W½SE¼.
T. 31 N., R. 59 E.,
Sec. 2, Lot 2, SW¼NE¼;
Sec. 32, Lots 2, 3, 4, 5, 7, 8.
T. 34 N., R. 60 E.,
Sec. 4, Lots 3 and 4;
Sec. 8, S½SE¼;
Sec. 16, SW¼NW¼, NW¼SW¼;
Sec. 22, N½, N½SW¼, SE¼;
Sec. 24, W½SW¼.
T. 35 N., R. 62 E.,
Sec. 32, E½.
T. 36 N., R. 61 E.,
Sec. 2, Lots 1, 2, 7, 8, S½NE¼, N½NE¼ SE¼, NE¼NW¼SE¼.
T. 37 N., R. 61 E.,
Sec. 9, Lot 1;
Sec. 16, Lot 1, SE¼NE¼, E½SW¼, SE¼;
Sec. 20, S½NW¼, SW¼;
Sec. 22, N½, N½SE¼, SE¼SE¼.

T. 41 N., R. 54 E.,
Sec. 17, SW¼NW¼, W½SW¼.
T. 43 N., R. 54 E.,
Sec. 33, N½S½.

The land described above aggregates approximately 15,000 acrea in Elko and White Pine Counties.

The applicant proposes to include the land within the Humboldt National Forest.

The land is temporarily segregated from the operation of the public land laws to the extent that the withdrawal, if effected, would prevent any form of disposal or appropriation under such laws. Current administrative jurisdiction over the land will not be affected by the temporary segregation. In accordance with section 204(b) of the Federal Land Policy and Management Act of 1976, 90 Stat. 2754, the segregative effect of the withdrawal application will terminate 2 years from the date of this notice.

Pursuant to section 204(h) of the Federal Land Policy and Management Act, an opportunity for a public hearing is hereby afforded. All interested persons who desire to be heard on the proposed withdrawal must submit a written request for a hearing to the Bureau of Land Management at the address shown below within 30 days from the date of publication of the notice. Upon determination by the State Director that a public hearing will be held, a notice will be published in the FEDERAL REGISTER, giving the time and place of such hearing.

In lieu of or in addition to attendance at a scheduled public hearing, written comments or objections to the pending withdrawal application may be filed with the undersigned authorized officer of the Bureau of Land Management within the 30—day period allowed.

All correspondence in connection with this withdrawal should be directed to the Bureau of Land Management, Department of the Interior, Chief, Division of Technical Services, 300 Booth Street, Reno, Nevada 89509.

WM. J. MALENCIK,
*Chief,*
*Division of Technical Services.*

[FR Doc. 79-4959 Filed 2-14-79;8:45 am]

---

[4310-84-M]

[NM 35829]

NEW MEXICO

**Proposed Withdrawal and Reservation of Lands: Correction**

FEBRUARY 8, 1979.

FR Doc. Volume 44, No. 8 as published in the FEDERAL REGISTER of Thursday, January 11, 1979, is corrected as follows:

Page 2435, 1st column under T. 24 S., R. 9 E., Sec. 7 is corrected to read lots 1, 2, 3, 4, E½NE¼ and S½ not lots 1, 2, 3, 4, E½NE½ and S½.

Page 2436, 1st column under T. 21 S., R. 11 E., line Sections 25 and 29, inclusive, is corrected to read Sections 25 to 29, inclusive.

Page 2437, 2nd column, the last paragraph of notice, the spelling of proposed is corrected from proposed.

FRED E. PADILLA,
*Chief, Branch of Lands and Minerals Operations.*

[FR Doc. 79-4960 Filed 2-14-79; 8:45 am]

---

[4310-84-M]

[NM 35944 and 35960]

NEW MEXICO

**Applications**

FEBRUARY 6, 1979.

Notice is hereby given that, pursuant to Section 28 of the Mineral Leasing Act of 1920 (30 U.S.C. 185), as amended by the Act of November 16, 1973 (87 Stat. 576), Northwest Pipeline Corporation has applied for five 4½-inch natural gas pipeline rights-of-way across the following lands:

NEW MEXICO PRINCIPAL MERIDIAN, NEW MEXICO

T. 31 N., R. 8 W.,
Sec. 5, SW¼NE¼ and NW¼SE¼.
T. 30 N., R. 14 W.,
Sec. 4, SE¼NE¼;
Sec. 26, SW¼NE¼ and NW¼SE¼;
Sec. 27, SE¼SE¼;
Sec. 34, NE¼NE¼;
Sec. 35, NW¼NW¼.

These pipelines will convey natural gas across 1.534 miles of public lands in San Juan County, New Mexico.

The purpose of this notice is to inform the public that the Bureau will be proceeding with consideration of whether the applications should be approved, and if so, under what terms and conditions.

Interested persons desiring to express their views should promptly send their name and address to the District Manager, Bureau of Land Management, P.O. Box 6770, Albuquerque, New Mexico 87107.

STELLA V. DOUGLAS,
*Acting Chief, Branch of Lands and Minerals Operations.*

[FR Doc. 79-4961 Filed 2-14-79; 8:45 am]

---

[4310-84-M]

[NM 35767]

NEW MEXICO

**Application**

FEBRUARY 6, 1979.

Notice is hereby given that, pursuant to Section 28 of the Mineral Leasing Act of 1920 (30 U.S.C. 185), as amended by the Act of November 16, 1973 (87 Stat. 576), Gas Company of New Mexico has applied for thirty-three 2, 4, 6 and 10-inch natural gas pipelines right-of-way across the following lands:

NEW MEXICO PRINCIPAL MERIDIAN, NEW MEXICO

T. 26 N., R. 6 W.,
Sec. 1, lot 1;
Sec. 3, lots 1, 2, 3, 4, SE¼NE¼, W½SW¼ and E½SE¼;
Sec. 4, lot 1, SE¼NW¼, N½SW¼, SW¼SW¼ and SE¼SE¼;
Sec. 5, N½SW¼, SE¼SW¼ and SE¼;
Sec. 7, E½SE¼;
Sec. 8, E½W½, NW¼NW¼ and W½SW¼;
Sec. 9, NE¼NE¼, SW¼NE¼,N½NW¼, N½SE¼ and SE¼SE¼;
Sec. 10, NE¼NE¼, NE¼SW¼, W½SW¼ and NE¼SE¼;
Sec. 11, E½NE¼ and N½S½;
Sec. 12, SE¼NW¼ and N½SW¼;
Sec. 13, N½NW¼, SW¼NW¼ and NW¼SW¼;
Sec. 14, N½N½, SW¼NW¼ and W½SW¼;
Sec. 15, NE¼NE¼ and W½SW¼;
Sec. 21, NW¼NE¼, S½NE¼, SE¼SW¼ and W½SE¼;
Sec. 28, N½NW¼ and SW¼NW¼;
Sec. 29, SE¼NE¼, SE¼SW¼, E½SE¼ and SW¼SE¼.
T. 27 N., R. 6 W.,
Sec. 33, E½NE¼;
Sec. 34, NE¼NE¼, S½N½ and E½SE¼;
Sec. 35, NW¼NE¼ and SW¼SW¼.
T. 26 N., R. 6 W.,
Sec. 5, lots 1, 2 and 3;
Sec. 7, SE¼SW¼.

These pipelines will convey natural gas across 19.583 miles of public lands in Rio Arriba County, New Mexico.

The purpose of this notice is to inform the public that the Bureau will be proceeding with consideration of whether the application should be approved, and if so, under what terms and conditions.

Interested persons desiring to express their views should promptly send their name and address to the District Manager, Bureau of Land Management, P.O. Box 6770, Albuquerque, New Mexico 87107.

STELLA V. DOUGLAS,
*Acting Chief, Branch of Lands and Minerals Operations.*

[FR Doc. 79-4962 Filed 2-14-79; 8:45 am]

---

[4310-84-M]

[NM 35961]

NEW MEXICO

**Application**

FEBRUARY 6, 1979.

Notice is hereby given that, pursuant to Section 28 of the Mineral Leasing Act of 1920 (30 U.S.C. 185), as amended by the Act of November 16, 1973 (87 Stat. 576), Transwestern Pipeline Company has applied for one 6-

inch natural gas pipeline right-of-way across the following land:

NEW MEXICO PRINCIPAL MERIDIAN, NEW MEXICO

T. 17 S., R 29 E.,
Sec. 19, lot 2.

This pipeline will convey natural gas across 0.05 of a mile of public land in Eddy County, New Mexico.

The purpose of this notice is to inform the public that the Bureau will be proceeding with consideration of whether the application should be approved, and if so, under what terms and conditions.

Interested persons desiring to express their views should promptly send their name and address to the District Manager, Bureau of Land Management, P.O. Box 1397, Roswell, New Mexico 88201.

STELLA V. DOUGLAS,
*Acting Chief, Branch of Lands and Minerals Operations.*

[FR Doc. 79-4963 Filed 2-14-79; 8:45 am]

---

[4310-84-M]

## NEW MEXICO WILDERNESS PROGRAM

### Public Workshop Schedule

FEBRUARY 8, 1979.

AGENCY: Bureau of Land Management.

ACTION: Notice.

SUMMARY: The New Mexico State Office of the Bureau of Land Management announces public meetings and workshops on the proposed Interim Management Policy and Surface Mining Regulations dated January 12, 1979. These documents are available from any BLM office.

Local public meetings are being held in Las Cruces (February 12), Roswell (February 14), and Albuquerque (March 6).

Public workshops are scheduled ad follows:

March 7, 1979—New Mexico State Office Workshop—1:00 p.m. to 4:30 p.m.—Four Seasons—Cavalier Room—2550 Carlisle, NE—Albuquerque, New Mexico.

March 8, 1979—New Mexico State Office Workshop—1:00 p.m. to 4:30 p.m.—New Mexico State University Corbett Center—University Avenue & Locust—Dona Ana Room—Level 3 (West)—Parking—South of Building—Las Cruces, New Mexico.

March 14, 1979—End of 60-day comment period.

FOR FURTHER INFORMATION CONTACT:

Any of the following New Mexico BLM offices:

Albuquerque District Office, P.O. Box 6770, Albuquerque, New Mexico 87107, Phone No. 766-2455.

Las Cruces District Office, P.O Box 1420, Las Cruces, New Mexico 88001, Phone No. 523-5571.

Socorro District Office, P.O. Box 1217, Socorro, New Mexico 87801, Phone No. 835-0412.

Roswell District Office, P.O. Box 1397, Roswell, New Mexico 88201, Phone No. 622-7673.

New Mexico State Office, P.O. Box 1449, Santa Fe, New Mexico 87501, Phone No. 988-6227.

LARRY L. WOODARD,
*Acting State Director.*

[FR Doc. 79-4910 Filed 2-14-79; 8:45 am]

---

[4310-84-M]

## OREGON

### Motorized Vehicles on Public Lands; Restriction of Use

Notice is hereby given that use of motorized vehicles on certain Public Lands in the Honeycombs area is restricted in accordance with the provisions of 43 CFR Parts 6010.4. These restrictions do not apply to emergency, law enforcement, and Federal or other government vehicles while being used for official or emergency purposes.

The areas affected by this designation and restriction notice are located approximately thirty-two miles southwest of Homedale, Idaho. The legal description of the closed lands is:

WILLAMETTE MERIDIAN

T. 24 S., R. 44 E.
Sec. 14: S½SW¼, SW¼SW¼SE¼, S½NW¼SW¼SE¼, W½SE¼SW¼SE¼
Sec. 15: SW¼, S½SE¼, NW¼SE¼, SW¼NE¼SE¼, SW¼NW¼NE¼SE¼, S½SE¼NE¼SE¼, NW¼SE¼NE¼SE¼
Sec. 22: E½, N½NW¼
Sec. 23: All
Sec. 24: S½, S½N½, S½N½N½, N½N½NE¼, S½NW¼NW¼, S½NE¼NE¼NW¼
Sec. 25: All
Sec. 26: All
Sec. 27: E½, SW¼, SE¼NW¼
Sec. 28: SE¼
Sec. 33: NE¼
Sec. 34: All
Sec. 35: All
T. 24 S., R. 45 E.
Sec. 19: W½, W½E½
Sec. 30: W½, W½E½
Sec. 31: W½, W½E½
T. 25 S., R. 44 E.
Sec. 1: All
Sec. 2: All
Sec. 3: E½, NE¼NW¼
Sec. 10: NE¼
Sec. 11: All
Sec. 12: N½, SW¼, N½SW¼, N½SE¼SE¼, SW¼SW¼SE¼, N½SE¼SE¼SE¼
Sec. 13: NW¼, W½NE¼, W½E½NE¼, N½N½SW¼, N½NW¼SE¼
T. 25 S., R. 45 E.
Sec. 6: W½, W½E½, E½SE¼
Sec. 7: N½ ¼, SW¼NW¼, NW¼SE¼NW¼, W½NE¼SE¼NW¼, NW¼SW¼NW¼SW¼SW¼, NW¼NE¼SW¼SW¼.

Total acres: 11,932.5

The use of these Public Lands by vehicles in the past have destroyed or severely damaged botanical, geological, zoological, wilderness and scenic values in the area. After consultation with various interest groups and individuals, a motorized vehicle restriction was determined to be necessary to protect the aforementioned values from further disturbance and destruction. The need for the vehicle restrictions were discussed at formal public meetings for the Honeycombs Area and informally with various picture rock miners working near the area.

The restriction is effective immediately until August 15, 1980 or until the final regulations governing off-road vehicle use on Public Lands are published, whichever occur first, thereby providing guidance for updated public input concerning permanent motorized vehicle restriction in the Honeycombs.

Maps showing the areas described above are available at the Bureau of Land Management, Vale District Office, 365 A Street West (P.O. Box 700), Vale, Oregon 97918.

FEARL M. PARKER,
*District Manager.*

[FR Doc. 79-4912 Filed 2-14-79; 8:45 am]

---

[4310-87-M]

## WESTERN LEG OF ALASKA NATURAL GAS TRANSMISSION SYSTEM; WILDERNESS INVENTORY (CALIFORNIA ONLY)

### Final Decision

BACKGROUND

Pursuant to Section 603 of the Federal Land Policy and Management Act of 1976 (Pub. L. 94-579) and the Wilderness Inventory Handbook (9/27/78) the BLM State Director of California has made a final decision on four Wilderness inventory units in Northern California. Authority for this decision was delegated in FR, Vol. 43, No. 218, 11/9/78. Inventories in these four units were conducted in advance of the statewide inventory in order to meet time commitments previously established for the special project identified as the Western Leg of the Alaska Natural Gas Transmission System.

The Alaska Natural Gas Transmission System from its point of entrance into California at the Oregon State line to its proposed termination point at Antioch, California is approximately 281.6 miles in length. The proposed pipeline through California parallels an existing 36 inch pipeline for its total length and will result in a 50 foot additional right-of-way width.

The right-of-way crosses 15.21 miles of Modoc National Forest, 16.94 miles of Shasta-Trinity National Forest, 1.85

miles of Lassen National Forest and approximately 2.53 miles of public lands administered by the Bureau of Land Management.

The respective National Forests have determined that the proposed pipeline will not have any significant adverse impacts upon any wilderness areas or lands which have wilderness values within their boundaries.

Interested individuals and groups were consulted and public comments on the proposed decision were received during a 60-day formal public review period which began November 30, 1978, and ended January 29, 1979. A public meeting was held on the proposed decision January 3, 1979, at the BLM Redding District Office.

FINAL DECISON

The California State Director's decision on the wilderness inventory of the four inventory units, CA-030-001—Bryant Mtn. Unit; CA-030-002—Pit River Unit; CA-030-003—Meridian Unit; and CA-030-004—Sacramento River Unit, is that the public lands contained within the units clearly and obviously do not meet the criteria for identification as wilderness study areas. When this decision becomes effective, the restrictions imposed by Section 603 of the Federal Land Policy and Management Act of 1976 will no longer apply on any of the public lands covered by this decision.

DECISION SUMMARY AND RATIONALE

The above inventory units contain public lands that are nearby or are traversed by the proposed pipeline. The lands do not meet the established criteria for identification as wilderness study areas primarily due to the scattered nature and small size of the inventoried lands, which range from less than 40 acres to a maximum of aproximately 2300 acres of contiguous public land. In addition, numerous intrusions, such as roads or structures are present throughout many of the parcels. It has therefore been determined that there are no public lands that contain wilderness values within the four identified units.

Response to the publication of the proposed decision was relatively light. All comments were responded to individually. Several of the comments received supported the proposed decision, and none opposed it. The majority of responses were requests for factual information about the units inventoried and for explanations of the wilderness inventory procedures. Some comments pertained to construction and maintenance of the proposed pipeline; these were referred to the California BLM project coordinator for consideration. At the public meeting representatives of the Pitt River Indians expressed concerns related to the cultural, archaeological, and ethnological impacts of the proposed pipeline; these concerns were also referred to the project coordinator for consideration in the cultural inventory of the proposed pipeline. All comments on the wilderness values of the proposed pipeline were evaluated and considered in this final decision.

EFFECTIVE DATE

This decision will become effective 30 days following its publication in the FEDERAL REGISTER. The State Director may amend this decision based upon new information received as a result of its publication. Any amendment will become final 30 days after its publication in the FEDERAL REGISTER. New information should be submitted to the Bureau of Land Management State Director, Federal Office Building, Room E-2841, 2800 Cottage Way, Sacramento, CA 95825.

SUPPLEMENTARY INFORMATION

Additional information concerning this decision can be obtained from the Wilderness Coordinator at the BLM Redding District Office, 355 Hemsted Drive, Redding, CA 96001.

ED HASTEY,
*State Director.*

[FR Doc. 79-4909 Filed 2-14-79; 8:45 am]

---

[4310-84-M]

## WILDERNESS INTERIM MANAGMENT POLICY AND GUIDELINES

### Public Workshop and Hearings Schedule

FEBRUARY 6, 1979.

The Bureau of Land Management in Nevada is accepting public comment and holding public workshops and hearings on the proposed Wilderness Interim Management Policy and Guidelines, and the proposed regulations governing exploration and mining under the Wilderness Review Program.

Public Hearings were held:

Feb. 5—Las Vegas, Nevada
Feb. 7—Reno, Nevada
Feb. 8—Ely, Nevada

Public Workshops and Open Houses are scheduled for:

Feb. 12 4 p.m.-8 p.m.—Elko BLM District Office, 2002 Idaho Street, Elko.
Feb. 15 6 p.m.-9 p.m.—Humboldt County Library, Winnemucca.
Feb. 15 3 p.m.-5 p.m. 7 p.m.-9 p.m.—Nevada Fish and Game Conference Room, 380 W. B Street, Fallon.
Feb. 22 5 p.m.-9 p.m.—Lawrence Hall, Corner of Hays & Mill Ave., Ely.
Feb. 22 3 p.m.-5 p.m. 7 p.m.-9 p.m.—Hawthorne Town Convention Center, 940 E. Street, Hawthorne.
Feb. 26 1 p.m.-4:30 p.m. 6 p.m.-8 p.m.—Battle Mountain, BLM District Office, 2nd and Scott Streets, Battle Mountain.
Feb. 27 1 p.m.-4:30 p.m. 6 p.m.-8 p.m.—Tonopah BLM Area Office Military Circle, Tonopah.
Mar. 5 2 p.m.-4 p.m. 7 p.m.-9 p.m.—Las Vegas BLM District Office, 4765 Vegas Drive, Las Vegas.

Public comment will be accepted until March 14 and should be addressed: Bureau of Land Management (210), 18th and C Streets, N.W., Washington, D.C. 20240 or Bureau of Land Management, 300 Booth Street, Room 3008, Federal Office Building, Reno, Nevada 89509.

Dated: February 6, 1979.

E. I. ROWLAND,
*State Director, Nevada.*

[FR Doc. 79-4911 Filed 2-14-79; 8:45 am]

---

[4310-84-M]

[Wyoming 66326]

## WYOMING

### Application

FEBRUARY 5, 1979.

Notice is hereby given that pursuant to Section 28 of the Mineral Leasing Act of 1920, as amended (30 U.S.C. 185), the Northwest Pipeline Corporation of Salt Lake City, Utah filed an application for a right-of-way to construct a 4½ inch pipeline for the purpose of transporting natural gas across the following described public lands:

SIXTH PRINCIPAL MERIDIAN, WYOMING

T. 21 N., R. 112 W.,
Sec. 28, NW¼NE¼ and NE¼NW¼.

The pipeline will transport natural gas produced from the Whiskey Buttes #9 Well located in the NE¼SW¼ sec. 21, to a point of connection with Northwest Pipeline Corporation's proposed pipeline located in the NW¼NE¼ sec. 28, all within T. 21 N., R. 112 W., 6th P.M., Lincoln County, Wyoming.

The purpose of this notice is to inform the public that the Bureau will be proceeding with consideration of whether the application should be approved and, if so, under what terms and conditions.

Interested persons desiring to express their views should do so promptly. Persons submitting comments should include their name and address and send them to the District Manager, Bureau of Land Management, Highway 187 N., P.O. Box 1869, Rock Springs, Wyoming 82901.

HAROLD G. STINCHCOMB,
*Chief, Branch of Lands and Minerals Operations.*

[FR Doc. 79-4913 Filed 2-14-79; 8:45 am]

[4310-84-M]

[W-65918]

WYOMING

Application

FEBRUARY 7, 1979.

Notice is hereby given that pursuant to Sec. 28 of the Mineral Leasing Act of 1920, as amended (30 U.S.C. 185), the Northwest Pipeline Corporation of Salt Lake City, Utah filed an application for a right-of-way to construct a 12¾ inch O.D. pipeline and a 16 inch O.D. pipeline as an addition to their gathering system for the purpose of transporting natural gas across the following described public lands:

SIXTH PRINCIPAL MERIDIAN, WYOMING

T. 19 N., R. 115 W.,
Sec. 6.
T. 20 N., R. 115W.,
Secs. 22, 28 and 32.
T. 19 N., R. 116 W.,
Secs. 10, 12, 28 and 32.
T. 17 N., R. 117 W.,
Secs. 4, 8 and 18.
T. 18 N., R. 117 W.,
Secs. 14, 22 and 28.
T. 16 N., R. 118 W.,
Secs. 6 and 18.
T. 17 N., R. 118 W.,
Secs. 14, 18, 24, 26 and 34.
T. 15 N., R. 119 W.,
Secs. 4 and 6.
T. 16 N., R. 119 W.,
Secs. 24 and 34.

The proposed 12¾ inch O.D. pipeline designated as Lateral A-1 will extend from a point located in lot 7 of section 18, T. 17 N., R. 118 W., to a point of connection with the proposed 16 inch O.D. pipeline located in lot 6 of section 18, T. 17 N., R. 117 W., all within Uinta County, Wyoming.

The proposed 16 inch O.D. pipeline designated as Trunk A will extend from a point located in the SE¼NE¼ of section 6, T. 15 N., R. 119 W., to a point of connection with Northwest Pipeline Corporation's existing 22 inch Ignacio to Sumas pipeline located in the SW¼SW¼ of section 23, T. 20 N., R. 115 W., all within Uinta and Lincoln Counties, Wyoming.

The proposed pipelines will transport natural gas as a part of Northwest Pipleline Corporation's Painter Reservoir Gathering System.

The purpose of this notice is to inform the public that the Bureau will be proceeding with construction of whether the application should be approved and, if so, under what terms and conditions.

Interested persons desiring to express their views should do so promptly. Persons submitting comments should include their name and address and send them to the District Manager, Bureau of Land Management, Highway 187 N., P.O. Box 1869, Rock Springs, Wyoming 82901.

MARLA B. BOHL,
*Acting Chief, Branch of Lands and Minerals Operations.*

[FR Doc. 79-4964 Filed 2-14-79; 8:45 am]

---

[4310-84-M]

[W-64422]

WYOMING

Application

FEBRUARY 9, 1979.

Notice is hereby given that pursuant to Sec. 28 of the Mineral Leasing Act of 1920, as amended (30 U.S.C. 185), the Kansas-Nebraska Natural Gas Company, Inc., of Hastings, Nebraska filed an amendment to reroute their pending application for a right-of-way to construct two 6⅝ inch O.D. pipelines and to include the construction of a 50' x 100' metering and dehydrator site for the purpose of transporting natural gas across the following described public lands:

SIXTH PRINCIPAL MERIDIAN, WYOMING

T. 38 N., R. 91 W.,
Sec. 1, NE¼SW¼ and SW¼SW¼;
Sec. 5, Lot 1, SE¼NE¼, E½SE¼ and SW¼SE¼;
Sec. 8, NW¼NE¼;
Sec. 12, NW¼NW¼.

The proposed metering and dehydrator site consisting of 0.115 acre is to be located in the NW¼NE¼ of Section 8, T. 38 N., R. 91 W., Fremont County, Wyoming.

The proposed pipelines will transport natural gas from the Lysite #1-11 well located in the NW¼NE¼ of Section 11 to a point of connection with an existing pipeline located in the NE¼SW¼ of Section 1; and, from the Long Butte #2-8 well located in the NW¼NE¼ of Section 8 to a point of connection with an existing pipeline located in Lot 1 of Section 5, all within T. 38 N., R. 91 W., Fremont County, Wyoming.

The purpose of this notice is to inform the public that the Bureau will be proceeding with consideration of whether the application should be approved and, if so, under what terms and conditions.

Interested persons desiring to express their views should do so promptly. Persons submitting comments should include their name and address and send them to the District Manager, Bureau of Land Management, 1300 Third Street, P.O. Box 670, Rawlins, Wyoming 82301.

MARLA B. BOHL,
*Acting Chief, Branch of Lands and Minerals Operations.*

[FR Doc. 79-4965 Filed 2-14-79; 8:45 am]

---

[4310-84-M]

[Wyoming 66348]

WYOMING

Application

FEBRUARY 9, 1979.

Notice is hereby given that pursuant to Section 28 of the Mineral Leasing Act of 1920, as amended (30 U.S.C. 185), the Cities Service Gas Company of Oklahoma City, Oklahoma filed an application for a right-of-way to construct 4½, 6⅝, 8⅝, and 12¾ inch pipelines for the purpose of transporting natural gas across the following described public lands:

SIXTH PRINCIPAL MERIDIAN, WYOMING

T. 17 N., R. 93 W.,
Sec. 4, lot 4 and SW¼NW¼ and W½SW¼;
Sec. 16, NW¼NW¼, S½N½ and W½SW¼;
Sec. 20, SW¼ and N½SE¼.
T. 18 N., R. 93 W.,
Sec. 16, SW¼SW¼;
Sec. 28, W½W½.

The pipelines will transport natural gas from wells located in secs. 15, 19 and 21, T. 17 N., R. 93 W., and secs. 17 and 29, T. 18 N., R. 93 W., Carbon County, Wyoming.

The purpose of this notice is to inform the public that the Bureau will be proceeding with consideration of whether the application should be approved and, if so, under what terms and conditions.

Interested persons desiring to express their views should do so promptly. Persons submitting comments should include their name and address and send them to the District Manager, Bureau of Land Management, 1300 Third Street, P.O. Box 670, Rawlins, Wyoming 82301.

MARLA B. BOHL,
*Acting Chief, Branch of Lands and Minerals Operations.*

[FR Doc. 79-4966 Filed 2-14-79; 8:45 am]

---

[4310-84-M]

[W-66596]

WYOMING

Application

FEBRUARY 8, 1979.

Notice is hereby given that pursuant to Sec. 28 of the Mineral Leasing Act of 1920, as amended (30 U.S.C. 185), the Northwest Pipeline Corporation of Salt Lake City, Utah filed an application for a right-of-way to construct a 4½ inch O. D. buried pipeline as an addition to their Moxa Arch Gathering System for the purpose of transporting natural gas across the following described public lands:

SIXTH PRINCIPAL MERIDIAN, WYOMING

T. 19 N., R. 112 W.,
Sec. 30, NE¼NE¼.

The proposed pipeline will transport natural gas from the Wilson Ranch #7 well located in the NW¼SE¼ of Section 19 to a point of connection with Northwest Pipeline Corporation's Trunk A pipeline located in the W½NW¼ of Section 29, all within T. 19 N., R. 112 W., Lincoln County, Wyoming.

The purpose of this notice is to inform the public that the Bureau will be proceeding with consideration of whether the application should be approved and, if so, under what terms and conditions.

Interested persons desiring to express their views should do so promptly. Persons submitting comments should include their name and address and send them to the District Manager, Bureau of Land Management, Highway 187 N., P.O. Box 1869, Rock Springs, Wyoming 82901.

MARLA B. BOHL,
*Acting Chief, Branch of Lands and Minerals Operations.*

[FR Doc. 79-4967 Filed 2-14-79; 8:45 am]

---

[4310-84-M]

[W-66597]

WYOMING

Application

FEBRUARY 8, 1979.

Notice is hereby given that pursuant to Sec. 28 of the Mineral Leasing Act of 1920, as amended (30 U.S.C. 185), the Northwest Pipeline Corporation of Salt Lake City, Utah filed an application for a right-of-way to construct a 4½ inch O. D. buried pipeline as an addition to their Moxa Arch Gathering System for the purpose of transporting natural gas across the following described public lands:

SIXTH PRINCIPAL MERIDIAN, WYOMING

T. 19 N., R. 112 W.,
Sec. 8, W½SE¼.

The proposed pipeline will transport natural gas from the Wilson Ranch #8 well located in the NW¼SE¼ of Section 8 to a point of connection with Northwest Pipeline Corporation's proposed Lateral A-3 pipeline located in the SW¼SE¼ of Section 8, all within T. 19 N., R. 112 W., Lincoln County, Wyoming.

The purpose of this notice is to inform the public that the Bureau will be proceeding with consideration of whether the application should be approved and, if so, under what terms and conditions.

Interested persons desiring to express their views should do so promptly. Persons submitting comments should include their name and address and send them to the District Manager, Bureau of Land Management, Highway 187 N., P.O. Box 1869, Rock Springs, Wyoming 82901.

MARLA B. BOHL,
*Acting Chief, Branch of Lands and Minerals Operations.*

[FR Doc. 79-4968 Filed 2-14-79; 8:45 am]

---

[4310-84-M]

[W-66679]

WYOMING

Application

FEBRUARY 8, 1979.

Notice is hereby given that pursuant to Sec. 28 of the Mineral Leasing Act of 1920, as amended (30 U.S.C. 185), the Marathon Pipe Line Company of Casper, Wyoming filed an application for a right-of-way to construct a 4 inch pipeline for the purpose of transporting crude oil and other synthetic liquid fuels across the following described public lands:

SIXTH PRINCIPAL MERIDIAN, WYOMING

T. 47 N., R. 91 W.,
Sec. 7, Lots 5 and 8.

The proposed pipeline will serve to connect the Hanson Honeybutte #6 well located in Lot 8 of Section 7 to Marathon Pipe Line Company's existing pipeline located in Lot 5 of Section 7, all within T. 47 N., R. 91 W., Washakie County, Wyoming.

The purpose of this notice is to inform the public that the Bureau will be proceeding with consideration of whether the application should be approved and, if so, under what terms and conditions.

Interested persons desiring to express their views should do so promptly. Persons submitting comments should include their name and address and send them to the District Manager, Bureau of Land Management, 1700 Robertson Avenue, P.O Box 119, Worland, Wyoming 82401.

MARLA B. BOHL,
*Acting Chief, Branch of Lands and Minerals Operations.*

[FR Doc. 79-4969 Filed 2-14-79; 8:45 am]

---

[4310-84-M]

[W-66680]

WYOMING

Application

FEBRUARY 9, 1979.

Notice is hereby given that pursuant to Sec. 28 of the Mineral Leasing Act of 1920, as amended (30 U.S.C. 185), the Phillips Petroleum Company of Bartlesville, Oklahoma filed an application for a right-of-way to construct a 6-inch I.D. buried pipeline for the purpose of transporting natural gas across the following described public lands:

SIXTH PRINCIPAL MERIDIAN, WYOMING

T. 45 N., R. 77 W.,
Sec. 22, NE¼SW¼ and W½SE¼;
Sec. 27, E½NE¼ and NW¼NE¼.

The proposed pipelines will transport natural gas from the Davis-American Federal No. 11 well located in the NE¼SW¼ of Section 22 and the Davis-Heldt Draw Unit No. 58 well located in the NE¼NE¼ of Section 27, T. 45 N., R. 77 W., Johnson County, Wyoming, to Phillips Petroleum Company's liquid extraction plant near Douglas, Wyoming.

The purpose of this notice is to inform the public that the Bureau will be proceeding with consideration of whether the application should be approved and, if so, under what terms and conditions.

Interested persons desiring to express their views should do so promptly. Persons submitting comments should include their name and address and send them to the District Manager, Bureau of Land Management, 951 Union Boulevard, Casper, Wyoming 82601.

MARLA B. BOHL,
*Acting Chief, Branch of Lands and Minerals Operations.*

[FR Doc. 79-4970 Filed 2-14-79; 8:45 am]

---

[4310-84-M]

[W-66840]

WYOMING

Application

FEBRUARY 8, 1979.

Notice is hereby given that pursuant to Sec. 28 of the Mineral Leasing Act of 1920, as amended (30 U.S.C. 185), the Mountain Fuel Supply Company of Salt Lake City, Utah filed an application for a right-of-way to construct a 6⅝ O. D. trunk pipeline and eight 3½ inch O. D. lateral pipelines as a part of their Whiskey Buttes Gathering System for the purpose of transporting natural gas across the following described public lands:

SIXTH PRINCIPAL MERIDIAN, WYOMING

T. 21 N., R. 112 W.,
Secs. 2, 10, 12, 14, 16, 22 and 28.

The proposed pipelines will transport natural gas from the Amoco Production Well Nos. 8, 13, 14, and 18 and the Whiskey Buttes Well Nos. 2, 6, 9, 17, 19, 21 and 22 to points of connection with an existing main pipeline, all located within T. 21 N., R. 112 W., Lincoln County, Wyoming.

The purpose of this notice is to inform the public that the Bureau will be proceeding with consideration of whether the application should be ap-

proved and, if so, under what terms and conditions.

Interested persons desiring to express their views should do so promptly. Persons submitting comments should include their name and address and send them to the District Manager, Bureau of Land Management, Highway 187 N., P.O. Box 1869, Rock Springs, Wyoming 82901.

MARLA B. BOHL,
*Acting Chief, Branch of Lands and Minerals Operations.*

[FR Doc. 79-4971 Filed 2-14-79; 8:45 am]

---

[4310-84]

[W-66595]

WYOMING

Application

FEBRUARY 8, 1979.

Notice is hereby given that pursuant to Sec. 28 of the Mineral Leasing Act of 1920, as amended (30 U.S.C. 185), the Northwest Pipeline Corporation of Salt Lake City, Utah filed an application for a right-of-way to construct a 4½ inch O. D. buried pipeline as an addition to their Moxa Arch Gathering System for the purpose of transporting natural gas across the following described public lands:

SIXTH PRINCIPAL MERIDIAN, WYOMING

T. 21 N., R. 112 W.,
Sec. 12, E½SW¼.

The proposed pipeline will transport natural gas from the Whiskey Buttes #18 well located in the NE¼SW¼ of Section 13 to a point of connection with Northwest Pipeline Corporation's Whiskey Buttes #17 pipeline located in the NE¼SW¼ of Section 12, all within T. 21 N., R. 112 W., Lincoln County, Wyoming.

The purpose of this notice is to inform the public that the Bureau will be proceeding with consideration of whether the application should be approved and, if so, under what terms and conditions.

Interested persons desiring to express their views should do so promptly. Persons submitting comments should include their name and address and send them to the District Manager, Bureau of Land Management, Highway 187 N., P.O. Box 1869, Rock Springs, Wyoming 82901.

MARLA B. BOHL,
*Acting Chief, Branch of Lands and Minerals Operations.*

[FR Doc. 79-4972 Filed 2-14-79; 8:45 am]

---

[4310-84-M]

[W-66354]

WYOMING

Application

FEBRUARY 8, 1979.

Notice is hereby given that pursuant to Sec. 28 of the Mineral Leasing Act of 1920, as amended (30 U.S.C. 185), the Northwest Pipeline Corporation of Salt Lake City, Utah filed an application for a right-of-way to construct a 4½ inch O.D. buried pipeline as an addition to their Moxa Arch Gathering System for the purpose of transporting natural gas across the following described public lands:

SIXTH PRINCIPAL MERIDIAN, WYOMING

T. 19 N., R. 112 W.,
Sec. 32, SE¼NE¼, NE¼SW¼, S½SW¼, and N½SE¼.

The proposed pipeline will transport natural gas from the Champlin 149G-1 well located in the NE¼SW¼ of Section 32 to a point of connection with Northwest Pipeline Corporation's existing Trunk B pipeline located in the SW¼SW¼ of Section 33, all within T. 19 N., R. 112 W., Lincoln County, Wyoming.

The purpose of this notice is to inform the public that the Bureau will be proceeding with consideration of whether the application should be approved and, if so, under what terms and conditions.

Interested persons desiring to express their views should do so promptly. Persons submitting comments should include their name and address and send them to the District Manager, Bureau of Land Management, Highway 187 N., P.O. Box 1869, Rock Springs, Wyoming 82901.

MARLA B. BOHL,
*Acting Chief, Branch of Lands and Minerals Operations.*

[FR Doc. 79-4973 Filed 2-14-79; 8:45 am]

---

[4310-84-M]

[Wyoming 66851]

WYOMING

Application

FEBRUARY 5, 1979.

Notice is hereby given that pursuant to Section 28 of the Mineral Leasing Act of 1920, as amended (30 U.S.C. 185), the Northwest Pipeline Corporation of Salt Lake City, Utah filed an application for a right-of-way to construct a 4½ inch O.D. pipeline for the purpose of transporting natural gas across the following described public lands:

SIXTH PRINCIPAL MERIDIAN, WYOMING

T. 21 N., R. 111 W.,
Sec. 20, SW¼NW¼ and NW¼SW¼.
T. 21 N., R. 112 W.,
Sec. 24 NE¼SW¼ and N½SE¼.

The proposed pipeline will transport natural gas from their Whiskey Buttes #23 well located in the NE¼SW¼ section 24, T. 21 N., R. 112 W., Lincoln County to tie into their existing gathering system located in the NW¼SW¼ section 20, T. 21 N., R., 111 W., Sweetwater County, Wyoming.

The purpose of this notice is to inform the public that the Bureau will be proceeding with consideration of whether the application should be approved and, if so, under what terms and conditions.

Interested persons desiring to express their views should do so promptly. Persons submitting comments should include their name and address and send them to the District Manager, Bureau of Land Management, Highway 187 N., P.O. Box 1869, Rock Springs, Wyoming 82901.

HAROLD G. STINCHCOMB,
*Chief, Branch of Lands and Minerals Operations.*

[FR Doc. 79-4974 Filed 2-14-79; 8:45 am]

---

[4310-84-M]

[W-66350]

WYOMING

Application

FEBRUARY 7, 1979.

Notice is hereby given that pursuant to Sec. 28 of the Mineral Leasing Act of 1920, as amended (30 U.S.C. 185), the Northwest Pipeline Corporation of Salt Lake City, Utah filed an application for a right-of-way to construct a 4½ inch O.D. buried pipeline as an addition to their Moxa Arch Gathering System for the purpose of transporting natural gas across the following described public lands:

SIXTH PRINCIPAL MERIDIAN, WYOMING

T. 19 N., R. 112 W.,
Sec. 10, E½NE¼.

The proposed pipeline designated as Lateral A-10 will transport natural gas from a point in the SW¼NE¼ of section 33, T. 20 N., R. 112 W., Lincoln County, Wyoming to a point of connection with Northwest Pipeline Corporation's Trunk A pipeline located in the SW¼NW¼ of section 11, T. 19 N., R. 112 W., Sweetwater County, Wyoming.

The purpose of this notice is to inform the public that the Bureau will be proceeding with consideration of whether the application should be approved and, if so, under what terms and conditions.

Interested persons desiring to express their views should do so promptly. Persons submitting comments

should include their name and address and send them to the District Manager, Bureau of Land Management, Highway 187 N., P.O. Box 1869, Rock Springs, Wyoming 82901.

MARLA B. BOHL,
*Acting Chief, Branch of Lands and Minerals Operations.*

[FR Doc. 79-4975 Filed 2-14-79; 8:45 am]

---

[4310-84-M]

[Wyoming 66849]

WYOMING

Application

FEBRUARY 5, 1979.

Notice is hereby given that pursuant to Section 28 of the Mineral Leasing Act of 1920, as amended (30 U.S.C. 185), the Northwest Pipeline Corporation of Salt Lake City, Utah filed an application for a right-of-way to construct a 4½ inch O.D. pipeline for the purpose of transporting natural gas across the following described public lands:

SIXTH PRINCIPAL MERIDIAN, WYOMING

T. 24 N., R. 111 W.,
Sec. 7, lots 6 and 7, NE¼SW¼ and N½SE¼;
Sec. 8, N½SW¼ and NW¼SE¼.
T. 24 N., R. 112 W.,
Sec. 12, NE¼SW¼.

The proposed pipeline will transport natural gas from their Fontenelle #1 well located in the NE¼SE¼ section 12, T. 24 N., R. 112 W., Lincoln County, easterly to a point of connection with the Lincoln Road #5 line located in the NW¼SE¼ section 8, T. 24 N., R. 111 W., Sweetwater County, Wyoming.

The purpose of this notice is to inform the public that the Bureau will be proceeding with consideration of whether the application should be approved and, if so, under what terms and conditions.

Interested persons desiring to express their views should do so promptly. Persons submitting comments should include their name and address and send them to the District Manager, Bureau of Land Management, Highway 187 N., P.O. Box 1869, Rock Springs, Wyoming 82901.

HAROLD G. STINCHCOMB,
*Chief, Branch of Lands and Minerals Operations.*

[FR Doc. 79-4976 Filed 2-14-79; 8:45 am]

---

[4310-84-M]

WYOMING

Scab Creek Wilderness Characteristics Determination; Notice of Public Review

Subsection 603(a) of the Federal Land Policy and Management Act of 1976 requires the Secretary of the Interior to report to the President by July 1, 1980, his recommendations on those areas which the Secretary has, prior to Novermber 1, 1975, formally identified as natural or primitive areas. In accordance with that subsection, notice is hereby given that the wilderness characteristics of the Scab Creek Instant Study Area and contiguous lands have been evaluated. A portion of this area has been determined to have wilderness characteristics as described in Section 2(c) of the Wilderness Act of 1964. Those lands which were involved in the wilderness characteristics study are:

SIXTH PRINCIPAL MERIDIAN, WYOMING

T. 32 N., R. 106 W.
Section 4;
Section 5;
Section 6;
Section 7, Lots 3 to 8, inclusive, NE¼NE¼ and NE¼NW¼;
Section 8, Lots 1 and 2;
Section 9, NE¼.
T. 33 N., R. 106 W.
Section 17;
Section 18, Lots 1, 2, and 4, NE¼, E½NW¼, E½SW¼, and SE¼;
Section 19, Lots 1 to 4, inclusive, NE¼, E½NW¼, and E½SE¼;
Section 20;
Section 21, S½;
Section 28;
Section 29, N½, SE¼, NW¼SW¼, and E½SW¼;
Section 30, S½NE¼;
Section 32, Lots 2, 3, and 4, NE¼, and N½SE¼;
Section 33.
T. 32 N., R. 107 W.
Section 1, Lots 1, 2, 5, 6, and 7, SW¼NW¼, NW¼SE¼, and SW¼SE¼;
Section 12, Lots 1 and 2, W½NE¼, and NE¼NW¼.
T. 33 N., R. 107 W.
Section 13, N½, and SE¼SE¼;
Section 14, NE¼ (excluding waters of Soda Lake), and NE¼NW¼ (excluding waters of Soda Lake);
Section 24, All;
Section 25, W½NE¼, N½NW¼, SE¼NW¼, and SW¼.

The area described aggregates about 9,400 acres, of which all are public lands.

Public comment is hereby requested from all persons who wish to state their views on the wilderness characteristics of these lands. The public comment period shall run until March 30, 1979. Public meetings will be held at 7 p.m. on March 15, 1979, at the Pinedale Resource Area Office and at 7 p.m. on March 22, 1979, at Room 204C of the Western Wyoming College in Rock Springs, to present the Bureau's findings, discuss these findings, and obtain comments from the public. Further information can be obtained by contacting Fred Wyatt, Area Manager, Pinedale Resource Area, P.O. Box 768, Pinedale, Wyoming 82941, phone (307) 367-4358.

Comments from the public will be used to help make a final determination on the wilderness characteristics of the Scab Creek area. After March 30th all comments will be evaluated and a final decision setting forth that part of the area having wilderness characteristics will be made.

Following this decision, the Bureau will develop land use plans with public involvement, prepare an environmental statement for public review and finally make a report to the President of the United States with a recommendation on whether or not the Scab Creek Area should be included in the National Wilderness System.

DANIEL P. BAKER,
*State Director.*

[FR Doc. 79-4914 Filed 2-14-79; 8:45 am]

---

[4310-09-M]

Bureau of Reclamation

NEW MELONES UNIT, CENTRAL VALLEY PROJECT, CALIF.

Intent To Prepare a Supplemental Environmental Statement

Pursuant to Section 102(2)(C) of the National Environmental Policy Act of 1969, the Department of the Interior proposes to prepare a supplement to the Final Environmental Statement, New Melones Lake, Stanislaus River, California, 1972, Corps of Engineers, as supplemented by the report Supplemental Data on Use of Conservation Yield prepared by Bureau of Reclamation. Proposed supplement will address the impacts of operation and use of the yield from New Melones Lake.

There will be a scoping session to solicit information from all interested public entities and persons to assist in determining the scope of issues to be addressed and to identify the significant issues related to the proposed action. The time and place of this scoping session will be announced not later than March 19, 1979.

For this supplement to the environmental statement, the contact person will be:

J. Bruce Kimsey, Office of Environmental Quality, Bureau of Reclamation, 2800 Cottage Way, Sacramento, CA 95825, Telephone (916) 484-4792.

Dated: February 9, 1979.

R. KEITH HIGGINSON,
*Commissioner.*

[FR Doc. 79-4978 Filed 2-14-79; 8:45 am]

---

[4310-31-M]

Geological Survey

## OIL, GAS, AND SULPHUR OPERATIONS IN THE OUTER CONTINENTAL SHELF (COS)

### Proposed Ban on the Use of Halogenated Phenols

AGENCY: Geological Survey, U.S. Department of the Interior.

ACTION: Announce that, in accordance with authorities prescribed in 30 CFR 250.11 and 30 CFR 250.43, the U.S. Geological Survey intends to prohibit the use of halogenated phenols in oil and gas operations on the Outer Continental Shelf.

COMMENTS: Interested persons are invited to submit written comments and recommendations with respect to this proposal. Responses should be directed to the Chief, Conservation Division, U.S. Geological Survey, National Center, Mail Stop 600, Reston, Virginia 22092, (703) 860-7524. Written comments should be received on or before March 31, 1979.

BACKGROUND: Halogenated phenols are one of several general classes of bactericides which are used by the petroleum industry to prevent microbial degradation and suppress the formation of hydrogen sulfide by sulfate reducing material. Bactericides are used in drilling muds, completion fluids, saltwater-disposal systems, water floods, workover fluids, and for the protection of surface-production equipment.

Halogenated phenols are far more toxic than a number of alternative bactericides. They have also demonstrated a persistence in the environment and a potential for bioaccumulation or the formation of more toxic compounds.

The proposed ban on halogenated phenols will apply to all lease operations commenced after the effective date. It is not the intent of this action to apply this ban to well fluids emplaced prior to the effective date.

FOR FURTHER INFORMATION CONTACT:

E. P. Danenberger, U.S. Geological Survey, National Center, Mail Stop 620, Reston, Virginia 22092, (703) 860-7549.

Dated: February 7, 1979.

W. A. RADLINSKI,
*Acting Director.*

[FR Doc. 79-4957 Filed 2-14-79; 8:45 am]

---

[4410-01-M]

## DEPARTMENT OF JUSTICE

### NPDES PERMITS

### Stipulation and Order in Action To Enforce Compliance

In accordance with Departmental policy, 28 CFR § 50.7, 38 FR 19029, notice is hereby given that a proposed stipulation and order in *United States v. Corporacion Azucarera de Puerto Rico* has been lodged with the United States District Court for the District of Puerto Rico. The decree imposes on defendant certain requirements and compliance dates with respect to the operation of its wastewater treatment plants at four of its facilities.

The Department of Justice will receive on or before March 19, 1979, written comments relating to the proposed stipulation and order. Comments should be addressed to the Assistant Attorney General of the Land and Natural Resources Division, Department of Justice, Washington, D.C. 20530 and should refer to *United States v. Corporacion Azucarera de Puerto Rico*, D.J. Ref. 90-5-2-1-104.

The stipulation may be examined at the office of the United States Attorney, District of Puerto Rico, Post Office Box 3391, San Juan, Puerto Rico 00904, at the Region II office of the Environmental Protection Agency, 26 Federal Plaza, New York, New York 10007, and the Pollution Control Section, Land and Natural Resources Division of the Department of Justice, Room 2625, Ninth Street and Pennsylvania Avenue, NW., Washington, D.C. 20530. A copy of the proposed stipulation and order may be obtained in person or by mail from the Pollution Control Section, Land and Natural Resources Division of the Department of Justice.

JAMES W. MOORMAN,
*Assistant Attorney General, Land and Natural Resources Division.*

[FR Doc. 79-4915 Filed 2-14-79; 8:45 am]

---

[4410-18-M]

Law Enforcement Assistance Administration

## NATIONAL INSTITUTE OF LAW ENFORCEMENT AND CRIMINAL JUSTICE

### Solicitation

The National Institute of Law Enforcement and Criminal Justice requests research proposals to study the correlates, causes and control of criminal violence. The desired research is interdisciplinary in its approach and longitudinal in its design.

The solicitation requests preliminary proposals rather than full proposals. Full proposals will be requested from the applicant (or applicants) receiving favorable review by a peer review panel. The postmark deadline date for submitting preliminary proposals is April 13, 1979. One grant will be awarded under this announcement. A maximum of $650,000 will be awarded initially for a two-year program.

Additional information and a copy of the solicitation may be obtained by contacting: Dr. Patrick A. Langan, Center for the Study of Crime Correlates and Determinants of Criminal Behavior, National Institute of Law Enforcement and Criminal Justice, 633 Indiana Avenue, N.W., Washington, D.C. 20531, (301) 492-9126.

Dated: February 5, 1979.

BLAIR G. EWING,
*Acting Director, NILECJ.*

[FR Doc. 79-4979 Filed 2-14-79; 8:45 am]

---

[7537-01-M]

## NATIONAL FOUNDATION FOR THE ARTS AND HUMANITIES

### EXPANSION ARTS PANEL

### Meeting

Pursuant to Section 10(a)(2) of the Federal Advisory Committee Act (Pub. L. 92-463), as amended, notice is hereby given that a meeting of the Expansion Arts Advisory Panel to the National Council on the Arts will be held on March 6, 1979, from 9:00 a.m.-5:30 p.m.; March 7, 1979, from 9:00 a.m.-5:30 p.m.; March 8, 1979, from 9:00 a.m.-4:30 p.m. in Room 1422 of the Columbia Plaza Office Building, 2401 E Street, N.W., Washington, D.C.

A portion of this meeting will be open to the public on March 6, 1979, from 9:00 a.m.-12:00 p.m. for the welcoming and introduction of panelists, and the viewing of a film.

The remaining sessions of this meeting on March 6, 1979, from 12:00 p.m.-5:30 p.m.; March 7, 1979, from 9:00 a.m.-5:30 p.m.; March 8, 1979, from 9:00 a.m.-4:30 p.m. are for the purpose of Panel review, discussion, evaluation, and recommendation on applications for financial assistance under the National Foundation on the Arts and the Humanities Act of 1965, as amended, including discussion of information given in confidence to the agency by grant applicants. In accordance with the determination of the Chairman published in the FEDERAL REGISTER March 17, 1977, these sessions will be closed to the public pursuant to subsections (c) (4), (6) and 9(b) of section 552b of Title 5, United States Code.

Further information with reference to this meeting can be obtained from Mr. John H. Clark, Advisory Committee Management Officer, National En-

dowment for the Arts, Washington, D.C. 20506, or call (202) 634-6070.

JOHN H. CLARK,
*Director, Office of Council and Panel Operations, National Endowment for the Arts.*

FEBRUARY 8, 1979.

[FR Doc. 79-4916 Filed 2-14-79; 8:45 am]

---

[7537-01-M]

## FOLK ARTS ADVISORY PANEL

### Meeting

Pursuant to Section 10(a)(2) of the Federal Advisory Committee Act (Pub. L. 92-463), as amended, notice is hereby given that a meeting of the Folk Arts Advisory Panel to the National Council on the Arts will be held on March 8, 1979, from 9:00 a.m.-5:30 p.m.; March 9, 1979, from 9:00 a.m.-5:30 p.m.; March 10, 1979, from 9:00 a.m.-5:30 p.m. in Room 1422 of the Columbia Plaza Office Building, 2401 E Street NW., Washington, D.C.

A portion of this meeting will be open to the public on March 10, 1979, from 9:00 a.m.-1:00 p.m. for policy discussions.

The remaining sessions of this meeting on March 8, 1979, from 9:00 a.m.-5:30 p.m.; March 9, 1979, from 9:00 a.m.-5:30 p.m.; March 10, 1979, from 1:00 p.m.-5:30 p.m. are for the purpose of Panel review, discussion, evaluation, and recommendation on applications for financial assistance under the National Foundation on the Arts and the Humanities Act of 1965, as amended, including discussion of information given in confidence to the agency by grant applicants. In accordance with the determination of the Chairman published in the FEDERAL REGISTER March 17, 1977, these sessions will be closed to the public pursuant to subsections (c) (4), (6) and 9(b) of section 552b of Title 5, United States Code.

Further information with reference to this meeting can be obtained from Mr. John H. Clark, Advisory Committee Management Officer, National Endowment for the Arts, Washington, D.C. 20506, or call (202) 634-6070.

JOHN H. CLARK,
*Director, Office of Council and Panel Operations, National Endowment for the Arts.*

[FR Doc. 79-4917 Filed 2-14-79; 8:45 am]

---

[7590-01-M]

## NUCLEAR REGULATORY COMMISSION

### ADVISORY COMMITTEE ON REACTOR SAFEGUARDS SUBCOMMITTEE ON ANTICIPATED TRANSIENTS WITHOUT SCRAM (ATWS)

### Meeting

The ACRS Subcommittee on Anticipated Transients without Scram (ATWS) will hold an open meeting on March 2, 1979, in Room 1046, 1717 H Street, NW, Washington, DC 20555 to continue its discussion of Vol. 3, NUREG-0460, "Anticipated Transients without Scram for LIght-Water Reactors."

In accordance with the procedures outlined in the FEDERAL REGISTER on October 4, 1978, (43 FR 45926), oral or written statements may be presented by members of the public, recordings will be permitted only during those portions of the meeting when a transcript is being kept, and questions may be asked only by members of the Subcommittee, its consultants, and Staff. Persons desiring to make oral statements should notify the Designated Federal Employee as far in advance as practicable so that appropriate arrangements can be made to allow the necessary time during the meeting for such statements.

The agenda for subject meeting shall be as follows:

FRIDAY, MARCH 2, 1979

*8:30 a.m. until the conclusion of business.* The Subcommittee may meet in Executive Session, with any of its consultants who may be present, to explore and exchange their preliminary opinions regarding matters which should be considered during the meeting and to formulate a report and recommendations to the full Committee.

At the conclusion of the Executive Session, the Subcommittee will hear presentations by and hold discussions with representatives of the NRC Staff, various industries, and their consultants, pertinent to this review. The Subcommittee may then caucus to determine whether the matters identified in the initial session have been adequately covered and whether the subject is ready for review by the full Committee.

Further information regarding topics to be discussed, whether the meeting has been cancelled or rescheduled, the Chairman's ruling on requests for the opportunity to present oral statements and the time allotted therefor can be obtained by a prepaid telephone call to the Designated Federal Employee for this meeting, Dr. Thomas G. McCreless, (telephone 202/634-3267) between 8:15 a.m. and 5:00 p.m., EST.

Background information concerning items to be considered at this meeting can be found in documents on file and available for public inspection at the NRC Public Document Room 1717 H Street, NW., Washington, DC 20555.

Dated: February 12, 1979.

JOHN C. HOYLE,
*Advisory Committee Management Officer.*

[FR Doc. 79-4950 Filed 2-14-79; 8:45 am]

---

[4910-58-M]

## NATIONAL TRANSPORTATION SAFETY BOARD

[N-AR 79-7]

### ACCIDENT REPORTS; SAFETY RECOMMENDATIONS

### Availability

*Aircraft Accident Report.*—The National Transportation Safety Board has made public its investigation report concerning the crash on February 10, 1978, of a Columbia Pacific Airlines Beech 99 in VFR conditions on takeoff at Richland (Wash.) Airport. The report, No. NTSB-AAR-78-15, was released February 6.

Investigation indicated that the aircraft was on a regularly scheduled passenger flight to Seattle with 15 passengers and two crewmembers on board. After liftoff, the aircraft climbed steeply to 400 feet above the runway, then stalled and crashed 2,000 feet beyond the end of the runway. A severe fire erupted after impact. All persons on board were killed, and the aircraft was destroyed.

The Safety Board has determined that the probable cause of the accident was the failure or inability of the flightcrew to prevent a rapid pitchup and stall by exerting sufficient push force on the control wheel. The pitchup was induced by the combination of a mistrimmed horizontal stabilizer and a center of gravity near the aircraft's aft limit. The mistrimmed condition resulted from discrepancies in the aircraft's trim system and the flightcrew's probable preoccupation with making a timely departure. Additionally, a malfunctioning stabilizer trim actuator detracted from the flightcrew's efforts to prevent the stall. Contributing to the accident were inadequate flightcrew training, inadequate trim warning system check procedures, inadequate maintenance procedures, and ineffective Federal Aviation Administration surveillance.

As a result of this accident, last August 11 the Safety Board issued recommendations A-78-53 through 55 urging the FAA to (1) issue an airworthiness directive which would require an immediate one-time inspection of

the horizontal stabilizer trim system on five models of the Beech 99, (2) require an inspection to insure that the horizontal stabilizer actuator on the Beech 99 is capable of deflecting the stabilizer under specified airloads, and (3) make it mandatory for the out-of-trim warning system to be in operation before each flight. (See 43 FR 36533; August 17, 1978.)

The report notes that investigation of this accident was difficult and time-consuming because of lack of definitive information on the aircraft's performance and on the flightcrew's reaction to the emergency situation which arose immediately after takeoff. The Board states that information from a flight data recorder and a cockpit voice recorder would have provided invaluable information in both of these areas, would have significantly reduced the investigative effort, and would have provided more direct evidence of casuality. These recorders are virtually a prerequisite to improvements in safety in commuter air carrier and corporate/executive operations involving complex multiengine aircraft. Accordingly, the Safety Board reiterated, in connection with the Richland accident, recommendations A-78-27 through 29, issued to FAA last April 20 following investigation of a number of similar accidents (43 FR 18073, April 27, 1978); the board urged FAA's early action on these recommendations:

Develop, in cooperation with industry, flight recorder standards (FDR/CVR) for complex aircraft which are predicated upon intended aircraft usage. (A-78-27)

Draft specifications and fund research and development for a low cost FDR, CVR, and composite recorder which can be used on complex general aviation aircraft, and establish guidelines for these recorders. (A-78-28)

In the interim, amend Title 14, Code of Federal Regulations, to require that no operation (except for maintenance ferry flights) may be conducted with turbine-powered aircraft certificated to carry six passengers or more, which require two pilots by their certificate, without an operable CVR capable of retaining at least 10 minutes of intracockpit conversation when power is interrupted. Such requirements can be met with available equipment to facilitate rapid implementation of this requirement. (A-78-29)

*Pipeline Accident Report.*—Last June 12 a 10-inch pipeline owned by the Gas Service Company of Kansas City, Mo., was struck and ruptured by excavation equipment during construction of a sewer in Kansas City. Natural gas, at more than 110-psig pressure, escaped from a 5-inch-long hole in the 2-foot-deep pipeline. Some 2 hours later the gas ignited while two gas company employees were cleaning the pipe with hand tools prior to installing a pipe repair clamp. Both men were burned seriously. The Board's investigation report, No. NTSB-PAR-78-5, was released February 5.

The Safety Board determined that the probable cause of the accident was the rupture of the pipeline by heavy excavating equipment operated by an unsupervised equipment operator. The sewer contractor had failed to previously establish the exact horizontal and vertical locations of the pipeline either by digging test holes or by requesting the gas company to locate the pipeline more precisely. Sparks from hand tools used to clean the pipe prior to its repair ignited the escaping natural gas which seriously burned two gas company employees.

As a result of its investigation of this accident, the Safety Board on December 29 issued eight safety recommendations, Nos. P-78-68 through 75, to the Gas Service Company; three recommendations, Nos. P-78-76 through 78, to the Torson Construction Company; one recommendation, No. P-78-79, to the Occupational Safety and Health Administration (OSHA) of the U.S. Department of Labor; and two recommendations, Nos. P-78-80 and 81, to the Governor of Missouri. Among these recommendations were, notably, the request to OSHA to set standards for gas industry safety clothing to protect workers repairing leaking gas pipelines where ignition of the gas could cause serious burns, and the request to the Gas Service Company to (1) urge muncipalities and consulting engineers to notify the gas company of all preconstruction meetings so it can be determined if construction activities will affect gas facilities, (2) revise the company's emergency plan to show what segments of a pipeline can be taken out of service for repairs and establish maximum safe operating pressures for such repairs, and (3) require the use of flame-retardant material in the uniforms of personnel required to work in gaseous atmospheres. (For complete text of all recommendations, see 44 FR 1228, January 4, 1979.)

*Aviation Safety Recommendation.*—As a result of its investigation of the crash last August 19 of a Beechcraft Model 35 at Redmond, Wash., the Safety Board on February 5 issued a "Class I, Urgent Action" recommendation to the Federal Aviation Administration. This recommendation asks FAA to—

Issue an Airworthiness Directive to (1) require that a one-time inspection of all Thompson Model 1900 fuel pumps be accomplished to determine the condition of the driver and drive pins (PN TF-1991) and (2) establish an overhaul interval of 800 operating hours on the pump. (A-79-3)

The Safety Board's investigation of this accident indicated that during the initial climb following takeoff, the engine reportedly lost power, and the aircraft stalled and crashed on airport property; the engine-driven fuel pump, Thompson Products, Inc., Model TF-1900, had failed. When the pump was disassembled, investigators found that the drive pin had been sheared as a result of excessive wear. Although the engine had been changed 46 hours before the crash, the fuel pump had accumulated 1,501.12 hours since its last overhaul.

The Board noted in its recommendation letter to FAA that a review of FAA's Maintenance Difficulty reports for the past five years has disclosed that eight TF-1900 fuel pumps have failed. Page 99 of the 1975 edition of the General Aviation Inspection Aids Summary documents two fuel pump drive pin failures which have caused power losses.

NOTE.—Single copies of the Safety Board's accident reports are available without charge, as long as limited supplies last. Copies of the Board's recommendation letters are also available free of charge. All requests for copies must be in writing, identified by report or recommendation number. Address inquiries to: Public Inquiries Section, National Transportation Safety Board, Washington, D.C. 20594.

Multiple copies of accident reports may be purchased by mail from the National Technical Information Service, U.S. Department of Commerce, Springfield, Va. 22151.

(Secs. 304(a)(2) and 307 of the Independent Safety Board Act of 1974 (Pub. L. 93-633, 88 Stat. 2169, 2172 (49 U.S.C. 1906)).)

MARGARET L. FISHER,
*Federal Register Liaison Officer.*

FEBRUARY 9, 1979.

[FR Doc. 79-4980 Filed 2-14-79; 8:45 am]

---

[3110-01-M]

## OFFICE OF MANAGEMENT AND BUDGET

### AGENCY FORMS UNDER REVIEW

#### BACKGROUND

When excecutive departments and agencies propose public use forms, reporting, or recordkeeping requirements, the Office of Management and Budget (OMB) reviews and acts on those requirements under the Federal Reports Act (44 U.S.C., Chapter 35). Departments and agencies use a number of techniques including public hearings to consult with the public on significant reporting requirements before seeking OMB approval. OMB in carrying out its responsibility under the Act also considers comments on the forms and recordkeeping requirements that will affect the public.

#### LIST OF FORMS UNDER REVIEW

Every Monday and Thursday OMB publishes a list of the agency forms received for review since the last list was published. The list has all the entries for one agency together and grouped into new forms, revisions, or exten-

sions. Each entry contains the following information:

The name and telephone number of the agency clearance officer;

The office of the agency issuing this form;

The title of the form;

The agency form number, if applicable;

How often the form must be filled out;

Who will be required or asked to report;

An estimate of the number of forms that will be filled out;

An estimate of the total number of hours needed to fill out the form; and

The name and telephone number of the person or office responsible for OMB review.

Reporting or recordkeeping requirements that appear to raise no significant issues are approved promptly. In addition, most repetitive reporting requirements or forms that require one half hour or less to complete and a total of 20,000 hours or less annually will be approved ten business days after ths notice is published unless specific issues are raised; such forms are identified in the list by an asterisk (*).

COMMENTS AND QUESTIONS

Copies of the proposed forms may be obtained from the agency clearance officer whose name and telephone number appear under the agency name. Comments and questions about the items on this list should be directed to the OMB reviewer or office listed at the end of each entry.

The timing and format of this notice have been changed to make the publication of the notice predictable and to give a clearer explanation of this process to the public. If you have comments and suggestions for further improvements to this notice, please send them to Stanley E. Morris, Deputy Associate Director for Regulatory Policy and Reports Management, Office of Management and Budget, 726 Jackson Place, Northwest, Washington, D.C. 20503

DEPARTMENT OF COMMERCE

AGENCY CLEARANCE OFFICER—EDWARD MICHAELS—377-42117.

NEW FORMS

Industry and trade administration
Felts for paper making
ITA—9024
Single time
Producers of felts for paper making
18 responses; 9 hours
Caywood, D. P. 395-6140

DEPARTMENT OF DEFENSE

AGENCY CLEARANCE OFFICER—JOHN V. WENDEROTH—697-1195.

EXTENSIONS

Departmental and other facility security clearance survey
DD 374
On occasion
Contractor facilities
1,403 Responses; 3,648 hours
Caywood, D. P., 395-6140

Departmental and other certificate pertaining to foreign interest
DD 441S
On occasion
Indust., commercial, educ., or other entities
2,710 responses; 2,981 hours
Caywood, D. P., 395-6140

DEPARTMENT OF HEALTH, EDUCATION, AND WELFARE

AGENCY CLEARANCE OFFICER—PETER GNESS—245-7488.

NEW FORMS

Office of Human Development
Quarterly estimate of expenditures
HDS-APS-65
Quarterly
50 States, D.C., Guam, P.R., V.I., N. Marianna Is.
228 Responses; 342 hours
Reese B. F., 395-6132

REVISIONS

Health services administration
Bureau of community health services common reporting requirements.
HSA-350
Semi-annually
Ambulatory health care grantees
2,700 responses; 49,542 hours
Richard Eisinger, 395-3214

DEPARTMENT OF THE INTERIOR

AGENCY CLEARANCE OFFICER—WILLIAM L. CARPENTER—343-6716.

NEW FORMS

U.S. Fish and Wildlife Service
State fishing and hunting survey
Single time
Households in selected state
3,000 responses; 800 hours
Ellett, C. A., 395-5080

REVISIONS

Geological survey
*Coal production and royalty report
9-373A
Quarterly
Coal mining industry
6,000 responses; 3,000 hours
Ellett, C. A., 395-5080

EXTENSIONS

Bureau of Reclamation
Land tenure survey
Single time
Landowners/operators in projects under Fed. Recl. Law
21,700 responses; 10,850 hours
Ellett, C. A., 395-5080

DEPARTMENT OF JUSTICE

AGENCY CLEARANCE OFFICER—DONALD E. LARUE—376-8283.

NEW FORMS

Law Enforcement Assistance Administration
Victim/witness assistance Agency survey
LEAA 3620
Single time
Agency survey
275 responses; 69 hours
Laverne V. Collins, 395-3214

ENVIRONMENTAL PROTECTION AGENCY

AGENCY CLEARANCE OFFICER—JOHN J. STANTON—245-3064.

NEW FORMS

Farmer's use of pesticides 1978
Single time
Grain, nut, livestock & poultry farmers
11,000 responses; 2,000 hours
Clarke, Edward H., 395-5867

SMALLL BUSINESS ADMINISTRATION

AGENCY CLEARANCE OFFICER—JOHN REIDY—653-6081.

EXTENSIONS

Group application form—local development company
Application form—state development company
501, 502, Parts I & II & 502A
On occassion
Those requesting assistance
800 responses; 8,000 hours
Caywood, D. P., 395-6140

STANLEY E. MORRIS,
*Deputy Associate Director for Regulatory Policy and Reports Management.*

[FR Doc. 79-4645 Filed 2-14-79; 8:45 am]

[3110-01-M]

AGENCY FORMS UNDER REVIEW; BACKGROUND

When executive departments and agencies propose public use forms, reporting, or recordkeeping requirements, the Office of Management and Budget (OMB) reviews and acts on those requirements under the Federal Reports Act (44 USC, Chapter 35). Departments and agencies use a number of techniques including public hearings to consult with the public on significant reporting requirements before seeking OMB approval. OMB in carry-

ing out its responsibility under the Act also considers comments on the forms and recordkeeping requirements that will affect the public.

LIST OF FORMS UNDER REVIEW

Every Monday and Thursday OMB publishes a list of the agency forms received for review since the last list was published. the list has all the entries for one agency together and grouped into new forms, revisions, or extensions. Each entry contains the following information:

The name and telephone number of the agency clearance officer;
The office of the agency issuing this form;
The title of the form;
The agency form number, if applicable;
How often the form must be filled out;
Who will be required or asked to report;
An estimate of the number of forms that will be filled out;
An estimate of the total number of hours needed to fill out the form; and
The name and telephone number of the person or office responsible for OMB review.

Reporting or recordkeeping requirements that appear to raise no significant issues are approved promptly. In addition, most repetitive reporting requirements or forms that require one half hour or less to complete and a total of 20,000 hours or less annually will be approved ten business days after this notice is published unless specific issues are raise; such forms are identified in the list by an asterisk (*).

COMMENTS AND QUESTIONS

Copies of the proposed forms may be obtained from the agency clearance officer whose name and telephone number appear under the agency name. Comments and questions about the items on this list should be directed to the OMB reviewer or office listed at the end of each entry.

The timing and format of this notice have been changed to make the publication of the notice predictable and to give a clearer explanation of this process to the public. If you have comments and suggestions for further improvements to this notice, please send them to Stanley E. Morris, Deputy Associate Director for Regulatory Policy and Reports Management, Office of Management and Budget, 726 Jackson Place, Northwest, Washington, D.C. 20503.

NEW FORMS

DEPARTMENT OF AGRICULTURE

(Agency Clearance Officer, Donald W. Barrowman, 447-6202)

Economics, Statistics, and Cooperatives Service
Direct Marketing-Case Study of Consumer Benefits and Questionnaire for Farm Cooperatives
Annually
Patrons of direct markets & coop marketing assoc.; 1,900 responses, 440 hours
Charles A. Ellett, 395-5080

Economics, Statistics, and Cooperatives Service
Farm Policy Survey
Single-time
Sample of farmers in Pennsylvania; 1,250 responses, 520 hours
Office of Federal Statistical Policy & Standard, 673-7974

Economics, Statistics, and Cooperatives Service
Study of Consumers Food-Related Behavior, Attitudes and Motives—Fourth Phase
Single-time
Sample of households; 2,100 responses, 1,226 hours
Office of Federal Statistical Policy & Standard, 673-7974

NEW FORMS

DEPARTMENT OF ENERGY

(Agency Clearance Officer, Albert H. Linden, 566-9021)

Application for a No Action Determination (Property Treated as a Stripper Well Property by a Producer)
ERA-102
Single-time
Domestic crude oil production of 10,000 barrels of oil or less/yr.; 230 responses, 575 hours
Hill, Jefferson B., 395-5867

NEW FORMS

DEPARTMENT OF HEALTH, EDUCATION, AND WELFARE

(Agency Clearance Officer, Peter Gness, 245-7488)

Alcohol, Drug Abuse and Mental Health Administration
Inventory of Mental Health Facilities and Their Units
Single-time
Mental health facilities & units; 732 responses, 366 hours
Richard Eisinger, 395-3214

Center for Disease Control
National Surveillance Survey
Single-time
State epidemiologists; 62 responses, 26 hours
Office of Federal Statistical Policy & Standard, 673-7974

NEW FORMS

Health Care Financing Administration (Medicare)
End-Stage Renal Disease Facility Survey Report
HCFA-3427
Annually
Suppliers of end-stage renal disease services; 1,000 responses, 12,000 hours
Richard Eisinger, 395-3214

National Institutes of Health
*Identification of Qualified Women and Minority Biomedical Scientists for Initial Review Group Membership
On occasion
Women and minority research bioscientists; 4,520 responses, 1,130 hours
Richard Eisinger, 395-3214

Office of Human Development
Questionnaire To Study the Potential Use of Multiplicity in Population Movement Research
Single-time
Plan for test multiplicity survey on migration; 350 responses, 140 hours
Office of Federal Statistical Policy & Standard, 673-7974

Public Health Service
National Survey of Personal Health Practices and Health Consequences (RFC)
Single-time
Random sample of 48 contiguous States & D.C.; 6,000 responses, 2,000 hours
Office of Federal Statistical Policy & Standard, 673-7974

Social Security Administration
1979 Recipient Characteristics Study
SSA-463
Single-time
State AFDC agencies; 25,000 responses, 22,500 hours
Reese, B. F., 395-6132

EXTENSIONS

OFFICE OF EDUCATION

Application for Law School Clinical Experience Program
OE-595
Single-time
Law schools; 160 responses, 4,800 hours
Laverne V. Collins, 395-3214

NEW FORMS

DEPARTMENT OF JUSTICE

(Agency Clearance Officer, Donald E. LaRue, 376-8283)

Law Enforcement Assistance Administration
Study of Victimization in Prisons
LEAA 3400
Single-time
Prisons, guards, admin. in a sample of State prisons; 7,776 responses, 4,011 hours
Office of Federal Statistical Policy & Standard, 673-7974

NEW FORMS

DEPARTMENT OF LABOR

(Agency Clearance Officer, Philip M. Oliver, 523-6341)

Employment and Training Administration
Job Corps Evaluation 2nd Follow-Up Survey
MT-1067C
Single-time
Job Corps terminees & comparison sample of youths; 5,820 responses, 2,910 hours
Strasser, A., 395-5080

Employment and Training Administration
Targeted Jobs Tax Credit (TJTC) Report Forms[1]
ETA 8468, THRU 8473
On occasion
SESA's and other participating agencies; 13,000,936 responses, 1,084,234 hours
Strasser, A., 395-5080

EXTENSIONS

Employment and Training Administration
Intensive Manpower Services Survey Form (2)
MT-1069
Single-time
Win staff; 1,950 responses, 369 hours
Strasser, A., 395-5080

EXTENSIONS

DEPARTMENT OF THE TREASURY

(Agency Clearance Officer, Howard Smith, 376-0436)

Bureau of Customs
Warehouse or Rewarehouse Entry
Custom 7502, 7502-A, 7502-B, & 7502-C
On occasion
Importers and brokers; 85,119 responses, 8,512 hours
Geiger, Susan B., 395-5867

NEW FORMS

NATIONAL SCIENCE FOUNDATION

(Agency Clearance Officer, Herman Fleming, 634-4070)

Science Education in Two-Year Colleges
Single-time
School administrators faculty & students; 5,200 responses, 1,733 hours
Laverne V. Collins, 395-3214

[1] This report has already been approved for use by OMB because of urgent need as described by the requesting agency. Public comments will still be carefully considered, and any changes indicated will be made either immediately or in the next revision of the report, as warranted.

NEW FORMS

OFFICE OF PERSONNEL MANAGEMENT AUTHORITY

(Agency Clearance Officer, John P. Weld, 632-7737)

Background Survey Questionnaire 79-2
OPM 1386
On occasion
Applicants for Federal employment; 500,000 responses, 41,667 hours
Marsha Traynham, 395-6140

STANLEY E. MORRIS,
*Deputy Associate Director for Regulatory Policy and Reports Management.*

[FR Doc. 79-4997 Filed 2-14-79; 8:45 am]

---

[7715-01-M]

## POSTAL RATE COMMISSION

[Docket No. A79-3]

### GRAVES MILL, VA. 22721 (R. QUEMERE AND FAMILY, PETITIONERS)

#### Notice and Order of Filing of Appeal

FEBRUARY 9, 1979.

On February 5, 1979, the Commission received a handwritten letter from the R. Quemere family (hereinafter "Petitioners") on behalf of themselves and others similarly situated concerning alleged U.S. Postal Service plans to close the Graves Mill, Virginia post office.[1] Although the letter makes no explicit reference to the Postal Reorganization Act, we believe it should be liberally construed as a petition for review pursuant to § 404(b) of the Act [39 U.S.C. § 404(b)], so as to preserve petitioners' right to appeal which is subject to a 30-day time limit.[2] Since the petition was apparently written by a layman rather than an attorney, it does not conform perfectly with the Commission's rules of practice which also require a petitioner to attach a copy of the Postal Service's final determination to the petition.[1] However, § 1 of the Commission's rules of practice calls for a liberal construction of the rules to secure just and speedy determination of issues.[2]

The Act requires that the Postal Service provide the affected community with at least 60 days' notice of a proposed post office closing so as to "* * * insure that such persons will have an opportunity to present their views."[3] The petition requests that the decision to close the Graves Mill post office be reversed. From the face of the petition it is unclear whether the Postal Service provided 60 days' notice, whether any hearings were held, and whether a determination has been made under 39 U.S.C. § 403(b)(3). (Petitioners failed to supply a copy of the Postal Service's final determination, if one is in existence.) The Commission's rules of practice require the Postal Service to file the administrative record of the case within 15 days after the date on which the petition for review is filed with the Commission.[4]

The Postal Reorganization Act states:

> The Postal Service shall provide a maximum degree of effective and regular postal services to rural areas, communities, and small towns where post offices are not self-sustaining. No small post office shall be closed solely for operating at a deficit, it being the specific intent of the Congress that effective postal services be insured to residents of both urban and rural communities.[1]

Section 404(b)(2)(C) of the Act specifically includes consideration of this goal in determinations by the Postal Service to close post offices. Petitioners assert that the Graves Mill post office is a local social community center and that they depend on its existence. The effect "on the community" of a post office closing is made a mandatory subject for consideration by § 404(b)(2)(A) of the Act. The petition appears to set forth the Postal Service action complained of in sufficient detail to warrant further inquiry to determine whether the Postal Service complied with its regulations for the discontinuance of post offices.[2]

The Act does not contemplate appointment of an Officer of the Commission in § 404(b) cases, and none is being appointed.[3]

*The Commission Orders:*

(A) The letter of February 5, 1979, from the R. Quemere family shall be construed as a petition for review pursuant to § 404(b) of the Act [39 U.S.C. § 404(b)]. The letter of February 7, 1979, from Jeannie Light will be consolidated with the Quemere petition.

(B) The Secretary of the Commission shall publish this Notice and Order in the FEDERAL REGISTER.

(C) The Postal Service shall file the administrative record in this case on

[1] A second appeal letter from Jeannie Light, which is being consolidated with the original appeal, was received on February 7, 1979.

[2] 39 U.S.C. § 404(b)(5). 39 U.S.C. § 404(b) was added to title 39 by Pub. L. 94-421 (September 24, 1976), 90 Stat. 1310-1311. Our rules of practice governing these cases appear at 39 CFR § 3001.110 *et seq.*

[1] 39 CFR § 3001.111(a).

[2] 39 CFR § 30001.1.

[3] 39 U.S.C. § 404(b)(1).

[4] 39 CFR § 3001.113(a). The Postal Rate Commission informs the Postal Service of its receipt of such an appeal by issuing PRC Form No. 56 to the Postal Service upon receipt of each appeal.

[1] 39 U.S.C. § 101(b).

[2] 42 FR 59079-59085 (11/17/77); the Commission's standard of review is set forth at 39 U.S.C. § 404(b)(5).

[3] In the Matter of Gresham, S.C., Route No. 1, Docket No. A78-1 (May 11, 1978).

or before February 20, 1979, pursuant to the Commission's rules of practice [39 CFR § 3001.113(a)].

By the Commission.

DAVID F. HARRIS,
*Secretary.*

February 5, 1979—Filing of Petition.
February 9, 1979—Notice and Order of Filing of Appeal.
February 20, 1979—Filing of record by Postal Service [*see* 39 CFR § 3001.113(a)].
February 26, 1979—Last day for filing of petitions to intervene [*see* 39 CFR § 3001.111(b)].
March 7, 1979—Petitioners' initial brief [*see* 39 CFR § 3001.115(a)].
March 22, 1979—Postal Service answering brief [*see* 39 CFR § 3001.115(b)].
April 6, 1979—(1) Petitioners' reply brief, if petitioners choose to file such brief [*see* 39 CFR § 3001.115(c).] (2) Deadline for motions by any party requesting oral argument. The Commission will exercise its discretion, as the interests of prompt and just decision may require, in scheduling or dispensing with oral argument.
June 5, 1979—Expiration of 120-day decisional schedule [*see* 39 U.S.C. § 404(b)(5)].

[FR Doc. 79-4918 Filed 2-14-79; 8:45 am]

---

[7710-12-M]

## POSTAL SERVICE

### TEMPORARY CHANGE IN MAIL CLASSIFICATION SCHEDULE

#### Parcel Post Classification Matters

On September 8, 1978 the United States Postal Service requested the Postal Rate Commission to submit to the Governors of the Postal Service a recommended decision on a change in the mail classification schedule restructuring bulk parcel post, a subclass of fourth-class zone-rate mail, pursuant to Chapter 36 of Title 39, United States Code. An explanation of the Postal Service proposal was published in the FEDERAL REGISTER by the Postal Rate Commission on September 18, 1978 (43 FR 41441-41442).

In its filing with the Postal Rate Commission, the Postal Service proposed the following changes to sections of the Domestic Mail Classification Schedule (additions to the schedule are in italics, while deletions from the schedule are bracketed):

In the part of the Schedule pertaining to fourth-class mail, the minimum weight requirement was revised as follows:

PART 400 FOURTH-CLASS

*400.1 Definition.*

a. Fourth-class mail consists of mailable matter:

* * * * *

(2) Weighing sixteen ounces or more, *except for bulk parcel post, each piece of which must weigh eight ounces or more;* and

* * * * *

The portion of the Schedule which contains the rates for single-piece parcel post was revised by the addition of the following subpart:

*400.2 Parcel Post.*

* * * * *

.21 Single-piece rate parcel post

* * * * *

*b. A surcharge in the amount of $1.50 will be applied to every surchargeable single-piece rate parcel, specified by the Postal Service by general regulation. For purposes of this subsection, surchargeable single-piece rate parcels so specified shall be those which are not amenable to mechanical handling because of any of the following: unstable shape; potential damage to the contents; damage to mechanized equipment; or potential hazard to Postal Service employes.*

The portion of the Schedule which defines the bulk parcel post subclass was revised as follows:

.22 Bulk parcel post

Bulk parcel post is parcel post presented in a single mailing of [300] *50* or more pieces properly prepared, [and] presented, *and* separated [by destination postage zone]. Exceptions: Items chargeable at the rates set forth in section 400.21(a)(i) [, (ii)] *and/or surchargeable as set forth in section 400.21(b)* may not be mailed as bulk parcel post.

The portion of the Schedule which contains the manner of computation of postage for bulk parcel post was replaced in its entirety as follows:

.221 Rates

[The rate of postage for each piece is the single-piece parcel post rate for a piece having a weight equal to the average weight per piece for each zone. *Example:* In a bulk mailing where the average weight per piece destined for zone 5 is 3.2 pounds, the rate of postage for each piece in that mailing destined for zone 5 is the singlepiece rate for a four pound parcel destined for zone 5.]

*Bulk parcel post rates consist of a per-piece charge plus a pound charge as follows:*

*Intra-BMC Rates—Per piece: $1.05; Per pound: 3.5¢.*

*Inter-BMC Rates—Per piece: $1.26; Per pound:*

*Zones 1 & 2: 3.3¢; Zone 3: 5.3¢; Zone 4: 7.8¢; Zone 5: 11.9¢; Zone 6: 17.1¢; Zone 7: 21.9¢; Zone 8: 34.2.*

The section of the Schedule which concerns the ascertainment and verification of bulk parcel post postage was revised as follows:

.222 Pieces that are not of identical size and weight may be mailed as bulk parcel post [only when specific] *under* methods approved by the Postal Service for ascertaining and verifying postage [are followed]. Methods for ascertaining and verifying postage will be available in a manner consistent with 39 U.S.C. § 403(c).

* * * * *

The section of the Schedule which relates to the acceptance of bulk parcel post was revised as follows:

.224 Matter mailed as bulk parcel post must be deposited in [a] *designated* postal facilit[y] *ies* at times and places specified by the Postal Service. Alternate provisions for acceptance may be offered in a manner consistent with 39 U.S.C. § 403(c).

Since the Postal Rate Commission has not transmitted its recommended decision to the Governors of the Postal Service within 90 days after submission of the Postal Service's request (September 8, 1978), the Postal Service will, under the authority of 39 U.S.C 3641(e), place in effect at 12:01 a.m. on February. 25, 1979 temporary changes in the mail classification schedule as described above.

(39 U.S.C 401, 403, 404, 3621, 3623, 3641)

W. ALLEN SANDERS,
*Acting Deputy General Counsel.*

[FR Doc. 79-5057 Filed 2-13-79; 8:45 am]

---

[8010-01-M]

## SECURITIES AND EXCHANGE COMMISSION

[File No. 81-456]

### DYMO INDUSTRIES, INC.

#### Application and Opportunity for Hearing

FEBRUARY 6, 1979.

Notice is hereby given that Dymo Industries, Inc. (the "Applicant") has filed an application pursuant to Section 12(h) of the Securities Exchange Act of 1934, as amended (the "1934 Act"), for an order granting Applicant an exemption from the provisions of Sections 13 and 15(d) of the 1934 Act.

The Applicant states, that as a result of a tender offer and subsequent merger it became an indirect wholly-owned subsidiary of Esselte AB, a Swedish corporation. Accordingly, the Applicant believes that the granting of an exemption would not be inconsistent with the public interest or the protection of investors since it has no securities owned by the public.

For a more detailed statement of the information presented, all persons are referred to said application which is on file in the offices of the Commis-

sion at 1100 L Street, NW., Washington, D.C.

Notice is further given that any interested person not later than March 5, 1979, may submit to the Commission in writing his views or any substantial facts bearing on this application or the desirability of a hearing thereon. Any such communication or request should be addressed: Secretary, Securities and Exchange Commission, 1100 L Street, NW., Washington, D.C. 20549, and should state briefly the nature of the interest of the person submitting such information or requesting the hearing, the reason for such request, and the issues of fact and law raised by the application which he desires to controvert. At any time after said date, an order granting the application may be issued upon request or upon the Commission's own motion.

For the Commission, by the Division of Corporation Finance, pursuant to delegated authority.

GEORGE A. FITZSIMMONS,
*Secretary.*

[FR Doc. 79-4898 Filed 2-14-79; 8:45 am]

---

[8010-01-M]

[File No. 81-4491]

**ENTENMANN'S, INC.**

**Application and Opportunity for Hearing**

FEBRUARY 6, 1979.

Notice is hereby given that the Entenmann's Inc. ("Applicant") has filed an application pursuant to Section 12(h) of the Securities Exchange Act of 1934, as amended, (the "1934 Act") for an order exempting it from the periodic reporting requirements under Section 15(d) of the 1934 Act.

Applicant's application discloses in part:

(1) As of October 27, 1978, following the expiration of a tender offer, W-L Products Co., ("Products") a wholly owned subsidiary of Warner-Lambert Company, owned more than 99% of Registrant's outstanding shares of common stock, and the remaining shares were held by 256 other shareholders.

(2) Registrant will be merged into Products, pursuant to short form merger provisions, effective on approximately January 26, 1979.

(3) The remaining shareholders of Registrant except for two shareholders who exercised dissenters rights will receive $30 in cash for their shares.

(4) Registrant and Products have made the appropriate filings concerning the tender offer and acquisition of control required under the 1934 Act.

For a more detailed statement of the information presented, all persons are referred to said application which is on file in the offices of the Commission at 1100 L Street, NW., Washington, D.C. 20549.

Notice is further given that any interested person no later than March 5, 1979 may submit to the Commission in writing his views of any substantial facts bearing on this application or the desirability of a hearing thereon. Any such communications or request should be addressed: Secretary, Securities and Exchange Commission, 500 North Capitol Street, NW., Washington, D.C. 20549, and should state briefly the nature of the interest of the person submitting such information or requesting the hearing, the reason for such request, and the issues of fact and law raised by the application which he desires to controvert. At any time after said date, an order granting the application may be issued upon request or upon the Commission's own motion.

For the Commission, by the Division of Corporation Finance, pursuant to delegated authority.

GEORGE A. FITZSIMMONS,
*Secretary.*

[FR Doc. 79-4899 Filed 2-14-79; 8:45 am]

---

[8010-01-M]

[Release No. 34-15551; File No. SR-NSCC-79-1]

**NATIONAL SECURITIES CLEARING CORP.**

**Self-Regulatory Organizations; Proposed Rule Change**

Pursuant to Section 19(b)(1) of the Securities Exchange Act of 1934, 14 U.S.C. 78s(b)(1), as amended by Pub. L. No. 94-29, 16 (June 4, 1975), notice is hereby given that on January 12, 1979, the above-mentioned self-regulatory organization filed with the Securities and Exchange Commission a proposed rule change as follows:

TEXT OF PROPOSED RULE CHANGE

Add Rule 15 as follows:

FINANCIAL RESPONSIBILITY OF MEMBERS

Rule 15. SEC. 1. Every Settling Member shall at any and all times, upon demand of the Corporation, furnish the Corporation with such assurances as it may require of such Member's ability to meet its commitments and shall conform to any conditions, rules, regulations or membership continuance guidelines the Corporation may adopt from time to time as it deems necessary for its protection, protection of its members, the safeguarding of securities and funds, the financial integrity of transactions submitted to the Corporation, the protection of investors and the maintenance of fair and orderly securities markets.

SEC. 2. The Financial Responsibility Committee of the Board of Directors of the Corporation, or such other person, persons or committee designated from time to time by the Board of Directors to oversee the financial responsibility and accountability of Members (hereinafter referred to as the "Committee") is empowered to establish such procedures and guidelines as will ensure to the Corporation the financial integrity of all Settling Members and of all transactions submitted for comparison, clearance and settlement, or other processing by the Corporation.

SEC. 3. The Committee shall have the authority to investigate and to determine whether the financial standards and guidelines, established commensurate with the membership or use of the Corporation's facilities have been exceeded or otherwise not complied with, or to determine that limitation to or exclusion from access or continued participation in the Corporation's facilities is reasonably necessary for the protection of the Corporation, its Settling Members and/or investors, the maintenance of fair and orderly markets, the safeguarding of securities and funds, and the financial responsibility and integrity of transactions submitted to the Corporation for processing.

In making an investigation as described above, the Committee may require any Settling Member to submit to an examination of its books and records, take sworn or unsworn testimony from the Member, the Member's employees or any other persons, or receive information, in the form of records, reports, or other concerning the financial or operational condition of such Member from any other Self-Regulatory Organization, as that term is defined in the Securities Exchange Act of 1934, as amended.

SEC. 4. If the Committee determines that (a) the standards or guidelines established under this Rule have not been complied with; and/or (b) a Settling Member is financially impaired or is insolvent, in any sense of that term; and/or (c) the financial or operational capability or viability of such Settling Member is such that continued participation or use of the Corporation's facilities by such Settling Member should be eliminated, restricted or subject to sanction, the Committee may fashion any such relief or remedy as it deems appropriate; such relief or remedy may include, but shall not be limited to, the Corporation's ceasing to act for such member, suspension, fine (not to exceed $100,000), restriction or limitation on such Member's use of facilities, censure, requiring financial security or deposits of such Member in excess of those described or calculated elsewhere in these rules (including but not limited to clearing fund deposits), or combin-

ing of clearing fund deposits in all divisions (if any) of the Corporation, as security.

SEC. 5. In the event any Member shall fail to comply with a request or demand of the Corporation, through the Committee pursuant to Section 3 above, or fails to comply with the relief determined by the Committee in Section 4 above, the Corporation may immediately, and without further notice, cease to act on behalf of such member or take any such other action which it deems appropriate.

SEC. 6. Appeals from any determination or action taken by the Committee pursuant to this rule shall be made in accordance with the provisions of Rule 37, Section 1.

SEC. 7. Nothing in this rule shall be deemed to limit or otherwise interfere with the rights of the Corporation as provided for in any other rule or procedure contained in these Rules.

STATEMENT OF BASIS AND PURPOSE

The basis and purpose of the foregoing proposed rule change is as follows:

The proposed rule change will centralize and formalize the Corporation's existing, authorized surveillance functions by clarifying and consolidating those rights of the Corporation to receive assurances from its members of their financial responsibility and ability to fulfill their obligations to the Corporation's facilities and operations. The Corporation's rights to such assurances are presently found in several provisions of the SCC Division Rules and Procedures.

As examples, Rule 12, Section 1, provides that at the request of the Corporation, a member "shall immediately furnish it with such assurances as it shall require of his ability to finance his commitments and shall conform to any conditions which the Corporation deems necessary for its protection and the protection of other * * * Members." Additionally, Rule 4, Section 3, provides that if any member fails to satisfy a deficiency to the Corporation, upon the Corporation's demand, the Corporation may cease to act for such member pursuant to Rule 18. And, pursuant to Rule 2, Section 3, the Corporation may require any member to submit information sufficient to demonstrate the member's "satisfactory financial condition and operational capacity."

In light of the recent shift of processing "over-the-counter" securities transactions from the Corporation's NCC Division to the SCC Division, and the attendant substantial increase in new members of the SCC Division, the Corporation believes that the interests of the Corporation and/or all of its members mandate that all policies, rules and procedures relating to the financial responsibility of members be as clear and concise as possible.

This proposed rule change is intended as an interim measure only. Unless extended in accordance with applicable provisions of the Act, it will expire six months after the date of its initial approval by the Securities and Exchange Commission. Before such expiration date, the Corporation intends to file with the Commission proposed rule changes which will set forth the substantive procedures and guidelines as described in Section 2 of the proposed rule change and to refile the proposed rule above to allow for review, comment and consideration of the total surveillance program.

The proposed rule change relates to the corporation's capacity to enforce compliance by its participants with its rules and further relates to the protection of investors and the public interest and to assurances as to the safeguarding of securities and funds for which the corporation is responsible by clarifying and summarizing those rules, procedures and rights of the Corporation attendant ensuring the financial responsibility of its members.

No comments on the proposed rule change have been solicited or received.

The Corporation does not perceive that the proposed rule change would constitute a burden on competition.

On or before March 22, 1979, or within such longer period (i) as the Commission may designate up to 90 days of such date if it finds such longer period to be appropriate and publishes its reasons for so finding or (ii) as to which the above-mentioned self-regulatory organization consents, the Commission will:

(A) By order approve such proposed rule change, or

(B) Institute proceedings to determine whether the proposed rule change should be disapproved.

Interested persons are invited to submit written data, views and arguments concerning the foregoing. Persons desiring to make written submissions should file 6 copies thereof with the Secretary of the Commission, Securities and Exchange Commission, Washington, D.C. 20549. Copies of the filing with respect to the foregoing and of all written submissions will be available for inspection and copying in the Public Reference Room, 1100 L Street, NW., Washington, D.C. Copies of such filing will also be available for inspection and copying at the principal office of the above mentioned self-regulatory organization. All submissions should refer to the file number referenced in the caption above and should be submitted on or before March 8, 1979.

For the Commission by the Division of Market Regulation, pursuant to delegated authority.

GEORGE A. FITZSIMMONS,
*Secretary.*

FEBRUARY 6, 1979.

[FR Doc. 79-4900 Filed 2-14-79; 8:45 am]

---

[8025-01-M]

## SMALL BUSINESS ADMINISTRATION

[License No. 03/03-0140]

### CENTRAL CAPITAL CORP.

**Application for a License as a Small Business Investment Company (SBIC)**

Notice is hereby given of the filing of an application with the Small Business Administration, pursuant to § 107.102 of the SBA Regulations (13 CFR 107.102 (1978)), under the name of Central Capital Corporation, 1097 Commercial Avenue, Lancaster, Pennsylvania 17604, for a license to operate in the Commonwealth of Pennsylvania as an SBIC under the provisions of the Small Business Investment Act of 1958 (Act), as amended, (15 U.S.C. 661 et seq.).

The proposed officers, directors and major stockholders are as follows:

Chairman of the Board and Director—Wilson D. McElhinny, 1430 Hunsicker Road, Lancaster, PA 17601.

President and Director—Henry K. Long, Jr., 155 Winfield Drive, Camp Hill, PA 17011.

Vice President, Director—John G. Schofer, R.D. No. 2—Box 393, Mohnton, PA 19540.

Secretary, Director—Donald E. Mattern, 20 Birchwood Road, Wyomissing, PA 19610.

Treasurer, Director—Robert C. Robertson, Jr., 2800 Merritt Parkway, Sinking Spring, PA 19608.

Ass't Treasurer and Director—James F. Brusch, 355 Richland Drive, Lancaster, PA 17601.

National Central Financial Corporation (NCFC), 100%. (There are no beneficial owners of 10 percent or more of the voting securities of NCFC).

The Applicant will begin operations with a capitalization of $1,000,000 which will be a source of long-term loans for qualified small business concerns in a wide range of industries for normal growth, expansion and working capital.

The Applicant does not intend to use the services of an investment adviser but will provide consulting services to its clients.

Matters involved in SBA's consideration of the application include the general business reputation and character of the proposed management and owner, including adequate profitability and financial soundness in accordance with the Act and regulations.

Notice is hereby given that any person may not later than March 2, 1979, submit written comments on the proposed company to the Deputy As-

sociate Administrator for Investment, Small Business Administration, 1441 "L" Street, NW., Washington, D.C. 20416.

A copy of this Notice shall be published in a newspaper of general circulation in Lancaster, Pennsylvania.

(Catalog of Federal Domestic Assistance Program No. 59.011, Small Business Investment Companies)

Dated: February 8, 1979.

PETER F. MCNEISH,
*Deputy Associate Administrator for Investment.*

[FR Doc. 79-4896 Filed 2-14-79; 8:45 am]

---

[8025-01-M]

[Application No. 04/04-5162]

**FIRST AMERICAN LENDING CORP.**

**Application for a License To Operate as a Small Business Investment Company**

An application for a license to operate as a small business investment company under the provisions of the Small Business Investment Act of 1958, as amended (15 U.S.C. 661 *et seq.*) has been filed by The First American Lending Corporation (applicant) with the Small Business Administration pursuant to 13 C.F.R. 107.102 (1978).

The officers and directors are as follows:

Roy W. Talmo, Chairman & Director, 1200 N. Dixie Hwy. Lake Worth, Florida 33460.
Walter Colmes, Vice President & Director, 2971 Coral Way, Miami, Florida 33145.
John Grieb, Secretary/Treasurer & Director, 401 N. Lake Blvd., N. Palm Beach, Florida 33408.
G. M. Caughlin, President & Director, 1200 N. Dixie Hwy., Lake Worth, Florida 33460.

The applicant will maintain its principal place of business at 1200 N. Dixie Highway, Lake Worth, Florida 33460. It will begin operations with $500,000 of private capital derived from the sale of 1,000 shares to The First American Bank of Palm Beach, 401 N. Lake Blvd., N. Palm Beach, Florida 33408.

The applicant will conduct its operations in the Palm Beach County and other areas of Florida.

As a small business investment company under Section 301(d) of the Act, the applicant has been organized and chartered solely for the purpose of performing the functions and conducting the activities contemplated under the Small Business Investment Act of 1958, as amended, from time to time, and will provide assistance solely to small business concerns which will contribute to a well-balanced national economy by facilitating ownership in such concerns by persons whose participation in the free enterprise system is hampered because of social or economic disadvantages.

Matters involved in SBA's consideration of the applicant include the general business reputation and character of the proposed owners and management and the probability of successful operation of the applicant under their management, including adequate profitability and financial soundness, in accordance with the Small Business Investment Act and the SBA rules and regulations.

Notice is hereby given that any person may, not later than March 2, 1979 submit to SBA written comments on the proposed applicant. Any such communication should be addressed to the Deputy Associate Administrator for Investment, Small Business Administration, 1441 L Street, NW., Washington, D.C. 20416.

A copy of this notice shall be published in a newspaper of general circulation in Lake Worth, Florida.

(Catalog of Federal Domestic Assistance Program No. 59.011 Small Business Investment Companies)

Dated: February 7, 1979.

PETER F. MCNEISH,
*Deputy Associate Administrator for Investment.*

[FR Doc. 79-4897 Filed 2-14-79; 8:45 am]

---

[8120-01-M]

## TENNESSEE VALLEY AUTHORITY

**EDGEMONT URANIUM MINE**

**Public Hearing**

The Tennessee Valley Authority (TVA) will conduct a public hearing on March 1, 1979, in Edgemont, South Dakota, concerning the agency's plans to mine uranium ore deposits in South Dakota. The hearing will begin at 7:30 p.m. in the Edgemont High School.

A draft environmental statement (DES) on the proposed Edgemont Uranium Mine was released to the public on January 24, 1979. The notice of availability of the DES was published in the FEDERAL REGISTER on February 5, 1979. Copies of the statement are available from the TVA Information Office, 400 Commerce Avenue, Knoxville, Tennessee 37902. The statement is also available for inspection at several libraries in South Dakota and Wyoming as follows:

Belle Fouche Public Library, Belle Fouche; Edgemont Public Library, Edgemont; Phoebe Apperson Hearst Free Library, Lead; Rapid City Public Library, Rapid City; Custer County Library, Custer; Hot Springs Public Library, Hot Springs; South Dakota State Library, Pierre; I. D. Weeks Library, Vermillion; Natrona County Public Library, Casper; William Robertson Coe Library, Laramie; Weston County Public Library, Newcastle; Wyoming State Library, Cheyenne; Laramie County Library System, Cheyenne; Niobrara County Library, Lusk; Converse County Library, Douglas.

As one of the activities it has undertaken to ensure an adequate supply of uranium, TVA has purchased approximately 100,000 acres of mineral rights in Fall River and Custer Counties, South Dakota, and in Weston and Niobrara Counties, Wyoming. TVA proposes to mine, through its operator, Silver King Mines, Inc., uranium ore deposits in this area. Both surface and underground mining methods would be used to extract the ore. Construction of underground mine support facilities would begin in mid-1980. One deposit recoverable by surface mining has been identified. All reserves which can be economically recovered would be mined. Based on indicated ore reserves and area potential, mining is expected to continue for about 10 years at a rate of about $2.25 \times 10^9$ tons of ore per year.

The public is invited to attend and comment on TVA's plans. A transcript will be made of the hearing and comments received will be responded to in the final environmental statement (FES). All written statements submitted to the following address by March 23, 1979, will also be considered in the FES: Herbert S. Sanger, Jr., General Counsel, Tennessee Valley Authority, 400 Commerce Avenue, Knoxville, Tennessee 37902.

Dated: February 8, 1979.

LEON E. RING,
*General Manager.*

[FR Doc. 79-4919 Filed 2-14-79; 8:45 am]

---

[4910-13-M]

## DEPARTMENT OF TRANSPORTATION

**Federal Aviation Administration**

**U.S. NATIONAL AVIATION STANDARD**

**Active Beacon Collision Avoidance System (BCAS)**

AGENCY: Federal Aviation Administration (FAA).

ACTION: Supplementary Notice of proposed National Aviation Standard.

SUMMARY: On December 21, 1978, the Federal Aviation Administration published for public review and comment a proposed U.S. National Aviation Standard for the Active Beacon Collision Avoidance System (43 FR 59565). This notice provides amendments to certain portions of that proposed standard.

DATES: Comments must be received on or before March 15, 1979.

ADDRESS: Director, Systems Research and Development Service, Attn: ARD-50, Federal Aviation Administration, Department of Transportation,

2100 Second Street SW., Washington, D.C. 20590.

FOR FURTHER INFORMATION CONTACT:

R. L. Bowers, Aircraft Separation Assurance Branch, ARD-250, Communications Division, Systems Research and Development Service, Federal Aviation Administration, 2100 Second Street SW., Washington, DC, 20590, telephone 202-426-9382.

SUPPLEMENTARY INFORMATION: On December 21, 1978, the FAA published for review and comment a proposed U.S. National Aviation Standard for the Active Beacon Collision Avoidance System (BCAS). Certain aspects of the technique for achieving coordination of BCAS generated maneuver advisories have been modified. Additionally, the limitation for spurious radio frequency radiation has been added. Accordingly, the following amendment to the proposed U.S. National Aviation Standard for BCAS is published for consideration during the initial review and comment cycle.

Paragraph 1.2.4.1: Change subparagraph b. to read as follows:

b. When within coverage of a DABS ground site, as determined by monitoring the digital interface or by the presence of a "DABS contact" signal (when available), and BCAS has jurisdiction over the encounter, the ATARS-BCAS Interface will initiate a Comm-B transaction via the associated DABS transponder in order to deliver the contents of the Conflict Information Register. This also serves to provide coordination with ATARS where required. This transaction shall be repeated once per antenna main beam passage (nominally 4-second intervals) of the ground sensor for the duration of the advisory.

Paragraphs 1.2.4.2 and 1.2.4.3: Delete both paragraphs and substitute the following:

*1.2.4.2 Other Aircraft with an ATARS-BCAS Interface.*—BCAS shall be inhibited from interrogating whenever it receives appropriate commands from the DABS ground site. Under certain conditions (e.g., the BCAS aircraft is near or outside of the coverage floor or range boundary of the ATARS protected volume), BCAS may be released to perform its separation assurance function. In such a case, and when BCAS has jurisdiction over the encounter, BCAS generated maneuver advisories shall be coordinated with the other aircraft and resolved prior to display to the pilot. A preliminary description of the ATARS-BCAS interface is contained in Appendix L, FAA-EM-78-5, Volume III-B.

Paragraph 2.4.1.2.3.1: Change to read: "Bits 1, 3 through 8 and 14 through 32 are set to zero. Bits 2 and 9 are set to one."

Paragraph 2.4.1.2.3.2: Delete all after the first sentence and substitute the following:

Bits 41-64 contain the 24 bit address of the interrogating aircraft. Bit 65 is the ATARS Service indicator bit which is set to one whenever the aircraft is receiving ATARS protection. Bits 66-71 contain the complement of own maneuver intent (provided by the ATARS-BCAS Interface) which is encoded as follows:

| Bit | Value | Meaning |
|---|---|---|
| 66 | 0 | No Horizontal advisory present. |
| | 1 | Horizontal advisory present. |
| 67 | 0 | Horizontal advisory is a positive advisory. |
| | 1 | Horizontal advisory is a negative advisory. |
| 68 | 0 | Direction of horizontal advisory is left. |
| | 1 | Direction of horizontal advisory is right. |
| 69 | 0 | No vertical advisory present. |
| | 1 | Vertical advisory present. |
| 70 | 0 | Vertical advisory is positive advisory. |
| | 1 | Vertical advisory is negative advisory. |
| 71 | 0 | Direction of vertical advisory is climb. |
| | 1 | Direction of vertical advisory is descent. |

Examples: 110000 means "Don't Turn Left". 101110 means "Turn Right and Don't Climb".

NOTE.—Active BCAS will use only the vertical maneuver advisories; the other advisories are included to provide for compatibility with the full capability BCAS and ATARS.

Paragraph 2.4.2.2: Change to read: "Whether or not own aircraft is receiving ATARS is determined in BCAS by monitoring the DABS transponder digital interface. (Bit assignments for this purpose have not yet been made but most likely will be contained in the SD field.)

Delete paragraphs 2.4.4.1 through 2.4.4.1.3 and substitute the following therefor:

*2.4.4.1 Reply To Other BCAS Interrogations.*—The reply to an interrogation from another BCAS will be either a Special Surveillance Reply or a Comm-B reply.

*2.4.4.1.1 Special Surveillance Reply.*—This reply is in response to an interrogation from another BCAS in which RL=0 and RS 0000 and is used for routine track updating. The format is as defined in Reference (b) with the following additional bit assignments:

*2.4.4.1.1.1 RI Field: Response Type Identifier.*—This 2-bit field (bits 3-4) is set to 01 to designate the presence of an ATARS-BCAS Interface and to indicate the format of the remainder of the data field.

*2.4.4.1.1.2 BC: BCAS Capability.*—This 3-bit field (bits 7-9) is encoded as follows:

| BC | BCAS Capability |
|---|---|
| 000 | ATARS only. |
| 001 | ATARS with BCAS operating at performance level 1. |
| 010 | ATARS with BCAS operating at performance level 2. |
| 011 | ATARS with BCAS operating at performance level 3. |
| 100 | ATARS with BCAS operating at performance level 4. |
| 101 | ATARS with BCAS operating at performance level 5. |
| Others | Not yet assigned. |

*2.4.4.1.1.3 AP: ATARS Protection.*—This 1-bit field (bit 10) shall be set to one whenever the ATARS-BCAS Interface has determined that the aircraft is being provided with ATARS protection.

*2.4.4.1.2 Comm-B Replies.*—This format is used in response to a request from another BCAS for coordination of maneuver intent, when it has been determined that BCAS has jurisdiction over the encounter, prior to being displayed to the respective pilots. Details of the format and protocol are yet to be determined.

Paragraph 2.4.4.2.2: At the end to the paragraph change the period to a comma and add: "using Comm-B formats and protocols.

Paragraph 2.5.1: After this paragraph insert:

*2.5.1.1 Spurious Radiation.*—Spurious radiation shall not exceed 90 dB below one Watt.

Paragraph 2.5.4.3.2: Change the third sentence to read: "Whenever PL=2, BCAS does not interrogate other aircraft but continues to interrogate any RBX within surveillance range."

Paragraph 2.5.4.3.2.1:

a. In the first sentence change "25±2" to read "16±2".

b. After the first sentence add the following new sentence: Similarly, when an interrogation from a DABS ground site contains the Squitter Lockout (SL) bit set to one, BCAS shall not transmit any interrogations (PL=1) until a time-out period of 16±2 seconds has elapsed since the receipt of the last SL=1 command.

c. Opposite PL=2 in the parameter table change "Otherwise" to read "$z_o$ <10,000 feet and $r_s \leq R_i$"

d. Delete the last sentence of the paragraph.

Paragraph 2.5.4.3.2.2: Change the last sentence to read: "The 'Standby' position selects PL=1."

Paragraph 2.5.4.3.4.1: In the second sentence of the first paragraph and in the second sentence of the second paragraph change "maneuver intent" to read "maneuver complement".

Issued in Washington, DC, on February 2, 1979.

DAVID J. SHEFTEL,
*Director, Systems Research and Development Service.*

[FR Doc. 79-4991 Filed 2-14-79; 8:45 am]

---

[4910-06-M]

**Federal Railroad Administration**

[FRA Waiver Petition Docket HS-79-1]

**MASSENA TERMINAL RAILROAD CO.**

**Petition for Exemption From the Hours of Service Act**

In accordance with 49 CFR 211.41 and 211.9, notice is hereby given that the Massena Terminal Railroad (MT) has petitioned the Federal Railroad Administration (FRA) for an exemption from the Hours of Service Act (83 Stat. 464, Pub. L. 91-169, 45 U.S.C. 64a(e)). That petition requests that the MT be granted authority to permit certain employees to continuously remain on duty for in excess of twelve hours.

The Hours of Service Act currently makes it unlawful for a railroad to require or permit specified employees to continuously remain on duty for a period in excess of twelve hours. However, the Hours of Service Act contains a provision that permits a railroad, which employs no more than fifteen employees who are subject to the statute, to seek an exemption from this twelve hour limitation.

The MT seeks this exemption so that it can permit certain employees to remain continuously on duty for periods not to exceed sixteen hours. The petitioner indicates that granting this exemption is in the public interest and will not adversely affect safety. Additionally, the petitioner asserts that it employs no more than fifteen employees and has demonstrated good cause for granting this exemption.

Interested persons are invited to participate in this proceeding by submitting written views or comments. FRA has not scheduled an opportunity for oral comment since the facts do not appear to warrant it. Communications concerning this proceeding should identify the Docket Number, Docket Number HS-79-1, and must be submitted in triplicate to the Docket Clerk, Office of the Chief Counsel, Federal Railroad Administration, Trans Point Building, 2100 Second Street, S.W., Washington, D.C. 20590. Communications received before March 5, 1979, will be considered by the FRA before final action is taken. Comments received after that date will be considered as far as practicable. All comments received will be available for examination both before and after the closing date for comments, during regular business hours in Room 4406, Trans Point Building, 2100 Second Street, S.W., Washington, D.C. 20590.

(Section 5 of the Hours of Service Act of 1969 (45 U.S.C. 64a), § 1.49(d) of the regulations of the Office of the Secretary, 49 CFR 1.49(d))

Issued in Washington, D.C. on February 6, 1979.

ROBERT H. WRIGHT,
*Acting Chairman, Railroad Safety Board.*

[FR Doc. 79-4920 Filed 2-14-79; 8:45 am]

---

[4910-59-M]

**National Highway Traffic Safety Administration**

[Docket No. IP79-1; Notice 1]

**INTERNATIONAL HARVESTER CORP.**

**Receipt of Petition for Determination of Inconsequential Noncompliance**

International Harvester Corp. of Fort Wayne, Indiana, has petitioned to be exempted from the notification and remedy requirements of the National Traffic and Motor Vehicle Safety Act (15 U.S.C. 1381 et seq.) for an apparent noncompliance with 49 CFR 571.120, Motor Vehicle Safety Standard No. 120, *Tire Selection and Rims for Vehicles Other Than Passenger Cars.* The basis of the petition is that the noncompliance is inconsequential as it relates to motor vehicle safety.

This notice of receipt of a petition is published under section 157 of the Act (15 U.S.C. 1417) and does not represent any agency decision or exercise of judgment concerning the merits of the petition.

Petitioner is the final stage manufacturer of multi-stage vehicles. From September 1, 1977 through November 1978 it believes that approximately 3,200 improper certification labels may have been used on medium and heavy duty trucks. Specifically S5.3(a) of Standard No. 120 requires a manufacturer to provide on the vehicle's certification label (affixed pursuant to 49 CFR Part 567) or separate tire information label the size designation of tires appropriate for the vehicle's GAWR, the rims size and type designation appropriate for those tires, and the cold inflation pressure of the tire. In its compliance testing of a Harvester truck NHTSA discovered that all this information was missing (agency file CIR 2024).

Petitioner believes that this noncompliance is inconsequential because the correct tires and rims were supplied with each vehicle for the GAWR and GVWR of the wheels, and the tires and rim otherwise meet the requirements of Standard No. 120. In addition, the information is provided the vehicle operator by other means: line set tickets affixed to the vehicle, as well as contained in the owner's manual, to which the operator is referred by the erroneous certification label.

Interested persons are invited to submit written data, views, and arguments on the petition of International Harvester Corp. described above. Comments should refer to the Docket number and be submitted to Docket Section, National Highway Traffic Safety Administration, Room 5108, 400 Seventh Street, S.W., Washington, D.C. 20590. It is requested but not required that five copies be submitted.

All comments received before the close of business on the comment closing date indicated below will be considered. The application and supporting materials and all comments received after the closing date will also be filed and will be considered to the extent possible. When the petition is granted or denied, notice will be published in the FEDERAL REGISTER pursuant to the authority indicated below.

Comment closing date: March 20, 1979.

(Sec. 102, Pub. L. 93-492, 88 Stat. 1470 (15 U.S.C. 1417); delegations of authority at 49 CFR 1.50 and 49 CFR 501.8)

Issued on February 6, 1979.

MICHAEL M. FINKELSTEIN,
*Associate Administrator for Rulemaking.*

[FR Doc. 79-4672 Filed 2-14-79; 8:45 am]

---

[7035-01-M]

## INTERSTATE COMMERCE COMMISSION

[Permanent Authority Decisions Volume No. 9]

**DECISION-NOTICE**

Decided: January 29, 1979.

The following applications are governed by Special Rule 247 of the Commission's *Rules of Practice* (49 CFR § 1100.247). These rules provide, among other things, that a protest to the granting of an application must be filed with the Commission within 30 days after the date notice of the application is published in the FEDERAL REGISTER. Failure to file a protest on or before March 19, 1979, will be considered as a waiver of opposition to the application. A protest under these rules should comply with Rule 247(e)(3) of the Rules of Practice which requires that it set forth specifically the grounds upon which it is made, contain a detailed statement of protestant's interest in the proceeding, (as specifically noted below), and shall specify with particularity the facts,

matters, and things relied upon, but shall not include issues or allegations phrased generally. A protestant should include a copy of the specific portions of its authority which protestant believes to be in conflict with that sought in the application, and describe in detail the method—whether by joinder, interline, or other means—by which protestant would use authority to provide all or part of the service proposed. Protests not in reasonable compliance with the requirements of the rules may be rejected. The original and one copy of the protest shall be filed with the Commission, and a copy shall be served concurrently upon applicant's representative, or upon applicant if no representative is named. If the protest includes a request for oral hearing, such request shall meet the requirements of section 247(e)(4) of the special rules and shall include the certification required in that section.

Section 247(f) provides, in part, that an applicant which does not intend timely to prosecute its application shall promptly request that it be dismissed, and that failure to prosecute an application under the procedures of the Commission will result in its dismissal.

Further processing steps will be by Commission notice, decision, or letter which will be served on each party of record. *Broadening amendments will not be accepted after the date of this publication.*

Any authority granted may reflect administratively acceptable restrictive amendments to the service proposed below. Some of the applications may have been modified to conform to the Commission's policy of simplifying grants of operating authority.

*We Find:* With the exceptions of those applications involving duly noted problems (e.g., unresolved common control, unresolved fitness questions, and jurisdictional problems) we find, preliminarily, that each common carrier applicant has demonstrated that its proposed service is required by the public convenience and necessity, and that each contract carrier applicant qualifies as a contract carrier and its proposed contract carrier service will be consistent with the public interest and the national transportation policy. Each applicant is fit, willng, and able properly to perform the service proposed and to conform to the requirements of Title 49, Subtitle IV, United States Code, and the Commission's regulations. Except where specifically noted this decision is neither a major Federal action significantly affecting the quality of the human environment nor a major regulatory action under the Energy Policy and Conservation Act of 1975.

In those proceedings containing a statement or note that dual operations are or may be involved we find, preliminarily and in the absence of the issue being raised by a protestant, that the proposed dual operations are consistent with the public interest and the national transportation policy subject to the right of the Commission, which is expressly reserved, to impose such conditions as it finds necessary to insure that applicant's operations shall conform to the provisions of 49 U.S.C. § 10930 [formerly section 210 of the Interstate Commerce Act].

In the absence of legally sufficient protests, filed on or before March 19, 1979 (or, if the application later becomes unopposed), appropriate authority will be issued to each applicant (except those with duly noted problems) upon compliance with certain requirements which will be set forth in a notification of effectiveness of this decision-notice. To the extent that the authority sought below may duplicate an applicant's existing authority, such duplication shall not be construed as conferring more than a single operating right.

Applicants must comply with all specific conditions set forth in the grant or grants of authority within 90 days after the service of the notification of the effectiveness of this decision-notice, or the application of a non-complying applicant shall stand denied.

By the Commission, Review Board Number 3, Members Parker, Fortier, and Hill.

H. G. Homme, Jr.,
*Secretary.*

MC 11220 (Sub-162F), filed November 7, 1978. Applicant: GORDONS TRANSPORTS, INC. 185 W. McLemore Avenue., P.O. Box 59, Memphis, TN 38101. Representative: James J. Emigh (same address as applicant). To operate as a *common carrier,* by motor vehicle, in interstate or foreign commerce, over regular routes, transporting *general commodities* (except those of unusual value, classes A and B explosives, household goods as defined by the Commission, commodities in bulk, and those requiring special equipment), serving the facilities of Ft. Worth Railway Service, Inc., at Saginaw, TX, as an off-route point in connection with carrier's otherwise authorized regular-route operations. (Hearing site: Ft. Worth TX.)

MC 19105 (Sub-53F), filed October 23, 1978, previously published in the Federal Register issue of December 5, 1978, as MC-19105 Sub 51F. Applicant: FORBES TRANSFER CO., INC., P.O. Box 3544, Wilson, NC 27893. Representative: Edward G. Villalon, 1032 Pennsylvania Building, Pennsylvania Avenue & 13th Street., NW, Washington, DC 20004. To operate as a *Common carrier,* by motor vehicle, in interstate or foreign commerce, over irregular routes, transporting *glass containers and accessories for containers,* between the facilities of Kerr Glass Manufacturing, at or near Wilson, NC, on the one hand, and, on the other, points in SC and VA. (Hearing site: Washington, D.C.)

Note.—This republication shows the correct docket number assigned to this proceeding as MC-19105 Sub 53F.

MC 29910 (Sub-199F), filed November 7, 1978. Applicant: ARKANSAS-BEST FREIGHT SYSTEM, INC., 301 S. 11th Street, Fort Smith, AR 72901. Representative: Don A. Smith, P.O. Box 43, 510 Greenwood, Fort Smith, AR 72902. To operate as a *common carrier,* by motor vehicle, in interstate or foreign commerce, over regular routes, transporting *general commodities* (except those of unusual value, classes A and B explosives, household goods as defined by the Commission, commodities in bulk, and those requiring special equipment), serving the facilities of (1) Campbell Filter Company, at or near Dexter, MO, (2) Florida Marine Tanks, Inc., at or near Dexter, MO, and (3) Essex-Franke Company, at or near New Madrid, MO, as off-route points in connection with carrier's otherwise authorized regular-route operations. (Hearing site: St. Louis, MO, or Memphis, TN.)

MC 35980 (Sub-4F), filed November 6, 1978. Applicant: M-B TRANSPORT, INC., 1941 Land Road., Jamison, PA 18929. Representative: John A. Meyer, Jr., 1875 Land Road., Jamison, PA 18929. To operate as a *common carrier,* by motor vehicle, in interstate or foreign commerce, over irregular routes, transporting *agricultural lime and limestone,* in bulk, in dump vehicles, between Devault and Norristown, PA, on the one hand, and, on the other, points in Hunterdon, Somerset, Middlesex, Mercer, Monmouth, Burlington, Ocean, Atlantic, Gloucester, Salem, Morris, Warren, Camden, and Cumberland Counties, NJ. (Hearing site: Philadelphia, PA, or Trenton, NJ.)

MC 41406 (Sub-97F), filed November 6, 1978. Applicant: ARTIM TRANSPORTATION SYSTEM, INC., 7105 Kennedy Avenue, Hammond, IN 46323. Representative: Wade H. Bourdon (same address as applicant). To operate as a *common carrier,* by motor vehicle, in interstate or foreign commerce, over irregular routes, transporting (1) *iron and steel articles, hydrants, valves, and accessories* for hydrants, valves and iron and steel articles from points in Jefferson, Talledega and Walker Counties, AL, to those points in the United States in and east of ND, SD, NE, KS, OK, TX, and (2) *materials, equipment, and supplies* used in the manufacture, distri-

bution, and installation of the commodities named in (1) above, in the reverse direction. (Hearing site: Brimingham, AK.)

MC 42011 (Sub-47F), filed November 17, 1978. Applicant: D. Q. WISE & CO., INC., P.O. Drawer L, Tulsa, OK 74112. Representative: J. G. Dail, Jr., P.O. Box LL, McLean, VA 22101. To operate as a *common carrier*, by motor vehicle, in interstate or foreign commerce, over irregular routes, transporting (1) *mineral preparation equipment, mineral processing equipment*, and *mineral handling equipment*, (2) *parts* for the commodities named in (1) above, (3) *castings, fabricated commodities*, and *machined commodities*, and (4) *equipment, materials, and supplies* used in the manufacture, repair, and distribution of the commodities named in (1), (2), and (3) above (except commodities in bulk, in tank vehicles), between the facilities of McNally-Pittsburg Corporation, at Pittsburg, KS, on the one hand, and, on the other, points in the United States (except AK, FL, GA, HI, NC, and SC), restricted to the transportation of traffic originating at or destined to the above-named facilities. (Hearing site: Tulsa, OK.)

MC 51146 (Sub-660F), filed November 13, 1978. Applicant: SCHNEIDER TRANSPORT, INC., P.O. Box 2298, Green Bay, WI 54306. Representative: Neil A. DuJardin (same address as applicant). To operate as a *common carrier*, by motor vehicle, in interstate or foreign commerce, over irregular routes, transporting *such commodities* as are dealt in or used by grocery and food business houses (except frozen commodities and commodities in bulk), from the facilities of Colgate-Palmolive Company, at Jeffersonville, IN, to Minneapolis, MN, and points in IL and WI. (Hearing site: Chicago, IL.)

MC 52460 (Sub-225F), filed November 6, 1978. Applicant: ELLEX TRANSPORTATION, INC., 1420 W. 35th Street., P.O. Box 9637, Tulsa, OK 74107. Representative: Wilburn L. Williamson, 280 National Foundation Life Building., Oklahoma City, OK 73112. To operate as a *common carrier*, by motor vehicle, in interstate or foreign commerce, over irregular routes, transporting *foodstuffs* (except in bulk, in tank vehicles), in vehicles equipped with mechanical refrigeration, from the facilities of M&M/MARS, at or near Cleveland, TN, to points in AL, AR, CO, KS, LA, MO, MS, NM, OK, and TX. (Hearing site: Memphis, TN.)

MC 52460 (Sub-226F), filed November 6, 1978. Applicant: ELLEX TRANSPORTATION, INC., 1420 W. 35th Street, P.O. Box 9637, Tulsa, OK 74107. Representative: Wilburn L. Williamson, 280 National Foundation Life Building, Oklahoma City, OK 73112. To operate as a *common carrier*, by motor vehicle, in interstate or foreign commerce, over irregular routes, transporting *anhydrous ammonia*, in bulk, from the facilities of Chevron Chemical Company, at or near Friend, KS, to points in CO, NE, OK, TX, and WY. (Hearing site: Dallas, TX.)

MC 55896 (Sub-100F), filed November 14, 1978. Applicant: R-W SERVICE SYSTEM, INC., 20225 Goddard Road, Taylor, MI 48180. Representative: George E. Batty (same address as applicant). To operate as a *common carrier*, by motor vehicle, in interstate or foreign commerce, over irregular routes, transporting (1) *roofing and building materials*, and (2) *materials, equipment, and supplies* used in the manufacture, distribution, and installation of roofing and building materials, between the facilities of Georgia-Pacific Corporation, at or near Quakertown, Richland Township, Bucks County, PA; on the one hand, and, on the other, points in AL, GA, IL, IN, KY, MI, NC, OH, SC, TN, VA, and WV. (Hearing site: Philadelphia, PA, or Washington, DC.)

MC 55896 (Sub-101F), filed November 13, 1978. Applicant: R-W SERVICE SYSTEM, INC., 20225 Goddard Road, Taylor, MI 48180. Representative: George E. Batty (same address as applicant). To operate as a *common carrier*, by motor vehicle, in interstate or foreign commerce, over irregular routes, transporting *glass containers and accessories* for glass containers, from Streator, IL, to points in MI. (Hearing site: Columbus, OH, or Chicago, IL.)

MC 57880 (Sub-18F), filed November 1, 1978. Applicant: ASHTON TRUCKING CO., a corporation, 1245 North Hwy 285, Monte Vista CO 81144. Representative: David E. Driggers, 1600 Lincoln Center, 1660 Lincoln Street, Denver, CO 80264. To operate as a *common carrier*, by motor vehicle, in interstate or foreign commerce, over irregular routes, transporting (1) *potato products and potato starches*, from points in Rio Grande Country, CO, to points in the United States (except AK and HI), and (2) *materials, equipment, and supplies used in the manufacture or distribution of the commodities named in (1)*, in the reverse direction, restricted in (1) and (2) to the transportation of traffic orignating at or destined to points in Rio Grande Country, CO. (Hearing site: Denver, CO, or Chicago, IL)

Note.—Dual operations may be at issue in this proceeding.

MC 58923 (Sub-51F), filed November 6, 1978. Applicant: GEORGIA HIGHWAY EXPRESS INC., 2090 Jonesboro Road S.E., Atlanta, GA 30315. Representative: John C. Henderson (same address as applicant). To operate as a *common carrier*, by motor vehicle, in interstate or foreign commerce, over regular routes, transporting *general commodities* (except those of unusual value, classes A and B explosives, household goods as defined by the Commission, commodities in bulk, and those requiring special equipment), between Opa Locka, FL, and Key West, FL; from Opa Locka over LeJeune Road to junction U.S. Hwy 27, then over U.S. Hwy 27 to junction FL Hwy 9, then over FL Hwy 9 to junction U.S. Hwy 1, then over U.S. Hwy 1 to Key West, and return over the same route, serving all intermediate points, and those points within 10 miles of U.S. Hwy 1 between Miami and Key West as off-route points. (Hearing site: Atlanta, GA, or Miami, FL.)

MC 59135 (Sub-37F), filed December 12, 1978. Applicant: RED STAR EXPRESS LINES OF AUBURN, INC., d.b.a. RED STAR EXPRESS LINES, 24-50 Wright Avenue, Auburn, NY 13021. Representative: Leonard A. Jaskiewicz, Suite 501, 1730 M Street, NW., Washington, DC 20036. To operate as a *common carrier*, by motor vehicle, in interstate or foreign commerce, over regular routes, transporting *general commodities* (except those of unusual value, classes A and B explosives, household goods as defined by the Commission, commodities in bulk, and those requiring special equipment), (1) between Westfield, NY and junction U.S. Hwy 20 and NY Hwy 60, near Fredonia, NY, over U.S. Hwy 20, serving all intermediate points, and the off-route points of Leicester and Union Springs, NY, and those in Erie County, NY, (2) between Syracuse and Watertown, NY, over U.S. Hwy 11, serving all intermediate points, and the off-route points in Oswego and Onondaga Counties, NY, (3) between Rochester and Maple View, NY, over U.S. Hwy 104, serving all intermediate points, and the off-route points in Cayuga, Monroe, Wayne, and Oswego Counties, NY, (4) between Rochester and Painted Post, NY, from Rochester over NY Hwy 96, to junction NY Hwy 332, then over NY Hwy 332 to Canandaigua then over NY Hwy 5, to Geneva, then over NY Hwy 14A to Penn Yan, then over NY Hwy 54 to Bath, then over U.S. Hwy 15 to Painted Post, and return over the same route, serving all intermediate points, and the off-route points in Monroe, Livingston, Wayne, Ontario, Seneca, Yates, Steuben, Allegheny, and Orleans Counties, NY, (5) between Geneva and Owego, NY, from Geneva over NY Hwy 96A, to Ovid, then over NY Hwy 96 to Owego, and return over the same route, serving all intermediate points, and the off-route points in Monroe, Livingston, Wayne, Ontario, Seneca, Yates, Steuben, Allegheny,

and Orleans Counties, NY, (6) between Auburn and Ithaca, NY, over NY Hwy 34, serving all intermediate points, and the off-route points in Cayuga and Seneca Counties, NY, (7) between Auburn and Cortland, NY, from Auburn over NY Hwy 38, to Groton, then over NY Hwy 222 to Cortland, and return over the same route, serving the intermediate points of Moravia and Groton, NY, and serving the off-route points in Cayuga and Onondago Counties, NY, (8) between Westfield and Newburgh, NY, from Westfield over NY Hwy 17, to Bloomingburg, then over NY Hwy 17K to Newburgh, and return over the same route, serving all intermediate points, and the off-route points of Limestone, Richburg, Frewsburg, and Firthcliffe, NY, and points in Erie, Wyoming, Livingston, Allegheny, Steuben, Yates, Ontario, Seneca, and Cayuga Counties, NY, (9) between Buffalo and Olean, NY, over NY Hwy 16, serving all intermediate points, and the off-route points in Erie, Wyoming, and Allegheny Counties, NY, (10) between Rochester and Wellsville, NY, from Rochester over NY Hwy 33, to junction NY Hwy 19, then over NY Hwy 19, to Wellsville, and return over the same route, serving all intermediate points, and the off-route points in Genesee, Wyoming, Steuben, Monroe, Wayne, Ontario, Livingston, Seneca, Yates, Orleans, and Allegheny Counties, NY, (11) between Sprakers and Sloansville, NY, over NY Hwy 162, serving all intermediate points, (12) between Geneva and Horseheads, NY, over NY Hwy 14, serving all intermediate points, and the off-route points in Ontario, Yates, and Seneca Counties, NY, (13) between Owego and Binghamton, NY, over NY Hwy 17C, serving all intermediate points, (14) between Montour Falls and Van Etten, NY, over NY Hwy 224, serving all intermediate points, (15) between Waverly and Ithaca, NY, over NY Hwy 34, serving all intermediate points, (16) between Spencer and Condor, NY, over NY Hwy 96 serving all intermediate points, (17) between Medina and Corfu, NY, from Medina over NY Hwy 63, to junction NY Hwy 77, then over NY Hwy 77, to Corfu, and return over the same route, serving all intermediate points, and the off-route points in Niagara, Orleans, Monroe, Genesee, Livingston, and Ontario Counties, NY, (18) between Dayton and Salamanca, NY, over NY Hwy 353, serving all intermediate points, and the off-route points in Erie, Genesee, Wyoming, and Allegheny Counties, NY, (19) between Hamburg and Salamanca, NY, over U.S. Hwy 219, serving all intermediate points, and the off-route points in Erie, Genesee, Wyoming, and Allegheny Counties, NY, (20) between Dunkirk and Avon, NY, over NY Hwy 39, serving all intermediate points, and the off-route points in Erie, Genesee, Wyoming, Livingston, Ontario, Monroe, Wayne, and Yates Counties, NY, (21) between Batavia and Great Valley, NY, over NY Hwy 98, serving all intermediate points, and the off-route points in Orleans, Monroe, Wayne, Genesee, Livingston, Ontario, Wyoming, Yates, Allegheny, and Steuben Counties, NY, (22) between Wayland and Jasper, NY, from Wayland over NY Hwy 21 to junction NY Hwy 36, then over NY Hwy 36 to Jasper, and return over the same route, serving all intermediate points, (23) between Caledonia and Hornell, NY, over NY Hwy 36, serving all intermediate points, and the off-route points in Monroe, Wayne, Livingston, Ontario, Seneca, and Yates Counties, NY, (24) between Watkins Glen and Corning, NY, over NY Hwy 414, serving all intermediate points, (25) between Albany and Newburgh, NY, over U.S. Hwy 9W, serving all intermediate points, and the off-route points in Delaware, Sullivan, Greene, and Schoharie Counties, NY, (26) between Albany and Newburgh, NY, from Albany over U.S. Hwy 9 to junction Interstate Hwy 84, then over Interstate Hwy 84, to Newburgh, and return over the same route, serving all intermediate points, and the off-route points in Columbia County, NY, (27) between Utica and Binghamton, NY, over NY Hwy 12, serving all intermediate points. (Hearing site: Boston, MA, Albany, Buffalo, and New York, NY.)

NOTE.—Applicant states that the purpose of this application is to obtain interstate operating authority to correspond with intrastate operating authority now held by applicant and issued by the New York State Department of Transportation.

MC 59150 (Sub-138F), filed October 18, 1978. Applicant: PLOOF TRUCK LINES, INC., 1414 Lindrose Street, Jacksonville, FL 32207. Representative: Martin Sack, Jr., 1754 Gulf Life Tower, Jacksonville, FL 32207. To operate as a *common carrier*, by motor vehicle, in interstate or foreign commerce, over irregular routes, transporting (1)(a) *plasterboard joint systems*, and (b) *materials and supplies* used in the installation, application, and distribution of the commodities in (1)(a) above, (except commodities in bulk), from the facilities of Georgia Pacific Corp., at or near Marietta, GA, to points in AL, NC, SC, and TN, and (2) *materials and supplies* used in the manufacturer of the commodities in (1) above, (except commodities in bulk), in the reverse direction. (Hearing site: Atlanta, GA, or Jacksonville, FL.)

MC 59150 (Sub-139F), filed November 7, 1978. Applicant: PLOOF TRUCK LINES, INC., 1414 Lindrose Street, Jacksonville, FL 32207. Representative: Martin Sack, Jr., 1754 Gulf Life Tower, Jacksonville, FL 32207. To operate as a *common carrier*, by motor vehicle, in interstate or foreign commerce, over irregular routes, transporting (1) *iron articles, steel articles, and copper articles*, and (2) *materials, equipment, and supplies used in the manufacture or distribution of the commodities named in (1)*, between the facilities of Knight Metalcraft Corporation, at Portland, TN, on the one hand, and, on the other, points in AL, FL, GA, LA, MS, NC, and SC. (Hearing site: Nashville, TN, or Jacksonville, FL.)

MC 59640 (Sub-68F), filed November 8, 1978. Applicant: PAULS TRUCKING CORP., Three Commerce Drive, Cranford, NJ 07106. Representative: Charles J. Williams, 1815 Front Street, Scotch Plains, NJ 07076. To operate as a *contract carrier*, by motor vehicle, in interstate or foreign commerce, over irregular routes, transporting *such commodities as are dealt in by home improvement centers and department stores, and materials, equipment, and supplies used in the conduct of such businesses*, (except commodities in bulk), between Jersey City, NJ, Canton, OH, Worcester, MA, and Rochester, NY, on the one hand, and, on the other, points in DE, FL, ME, MD, MA, NH, NJ, NY, NC, OH, PA, VT, and VA, under contract with Ames Department Stores, Inc., of Rocky Hill, CT. (Hearing site: Newark, NJ, or New York, NY.)

MC 65525 (Sub-25F), filed December 21, 1978. Applicant: WHITE BROTHERS TRUCKING CO., a corporation, Box 6, Wasco, IL 60183. Representative: Leonard R. Kofkin, 39 South LaSalle Street, Chicago, IL 60603. To operate as a *common carrier*, by motor vehicle, in interstate or foreign commerce, over irregular routes, transporting *commodities*, which because of size or weight, require the use of special equipment or special handling, between points in IL and WI, on the one hand, and, on the other, points in the United States (except AK and HI). (Hearing site: Milwaukee, WI.)

MC 65580 (Sub-24F), filed October 10, 1978. Applicant: MUSHROOM TRANSPORTATION CO., INC., 845 E. Hunting Park Avenue, Philadelphia, PA 19124. Representative: Michael R. Werner, P.O. Box 1409, 167 Fairfield Road, Fairfield, NJ 07006. To operate as a *common carrier*, by motor vehicle, in interstate or foreign commerce, over regular routes, transporting *general commodities* (except those of unusual value, classes A and B explosives, household goods as defined by the Commission, commodities in bulk, and those requiring special equipment), (1) between New York, NY, (except Yonkers, New York) and

junction U.S. Hwy 130 and NJ Hwy 73, from New York over Interstate Hwy 95 to junction U.S. Hwy 1, then over U.S. Hwy 1 to junction U.S. Hwy 130, then over U.S. Hwy 130 to junction NJ Hwy 73, and return over the same route, (2) between junction U.S. Hwy 130 and NJ Hwy 73 and junction U.S. Hwy 130 and NJ Hwy 70, over U.S. Hwy 130, (3) between junction U.S. Hwy 130 and NJ Hwy 70 and Philadelphia, PA, from junction U.S. Hwy 130 and NJ Hwy 70 over U.S. Hwy 130 to junction U.S. Hwy 30, then over U.S. Hwy 30 to Philadelphia, and return over the same route, (4) between junction U.S. Hwy 130 and NJ Hwy 73 and Philadelphia, PA, over NJ Hwy 73, (5) between junction U.S. Hwy 130 and NJ Hwy 70 and Philadelphia, PA, over NJ Hwy 70, (6) between New York, NY, (except Yonkers, New York) and junction NJ Hwy 17 and Interstate Hwy 80, from New York over US Hwy 1 to junction NJ Hwy 3, then over NJ Hwy 3 to junction NJ Hwy 17, then over NJ Hwy 17 to junction Interstate Hwy 80, and return over the same route, (7) between junction NJ Hwy 17 and Interstate Hwy 80 and junction NJ Hwys 17 and 4, over NJ Hwy 17, (8) between junction NJ Hwys 17 and 4 and junction NJ Hwy 17 and US Hwy 202, over NJ Hwy 17, (9) between New York, NY, (except Yonkers, New York) and junction Interstate Hwy 80 and NJ Hwy 17, from New York over Interstate Hwy 95 to junction Interstate Hwy 80, then over Interstate Hwy 80 to junction NJ Hwy 17, and return over the same route, (10) between New York, NY, (except Yonkers, New York) and junction NJ Hwys 17 and 4, from New York over Interstate Hwy 95 to junction NJ Hwy 4, then over NJ Hwy 4 to junction NJ Hwy 17, and return over the same route, and (11) between junction NJ Hwy 17 and US Hwy 202 and West Mahwah, NJ, over US Hwy 202, serving, in (1) through (11) inclusive, all intermediate points and those off-route points in that part of NJ and PA bounded by a line, including points on the line, described as beginning at the intersection of NJ-NY State line with the Hudson River, then west along the NJ-NY State line to junction US Hwy 202, then south along US Hwy 202 to junction US Hwy 46, then west along US Hwy 46 to junction US Hwy 206, then south along US Hwy 206 to Trenton, NJ, then south along US Hwy 1 to Philadelphia, PA, then across the Delaware River to Camden, NJ, then south along the east bank of the Delaware River to Penns Grove, NJ, then north along US Hwy 130 to junction alternate US Hwy 130 (formerly NJ Hwy 44), then north along Alternate US Hwy 130 to Paulsboro, NJ, then north along Interstate Hwy 295 to junction County Road 534, then east along County Road 534 to junction US Hwy 206, then north along US Hwy 206 to junction County Road 537, then east along County Road 537 to junction NJ Hwy 33, and then east along NJ Hwy 33 to the Atlantic Ocean. (Hearing site: Philadelphia, PA.)

MC 73165 (Sub-459F), filed December 26, 1978. Applicant: EAGLE MOTOR LINES, INC., P.O. Box 11086, Birmingham, AL 35202. Representative: R. Cameron Rollins (same address as applicant). To operate as a *common carrier*, by motor vehicle, in interstate or foreign commerce, over irregular routes, transporting (1)(a) *equipment*, and *attachments, accessories, and supplies* for equipment, and (b) *materials, equipment, and supplies* used in the manufacture and distribution of the commodities in (1)(a) above, (except commodities in bulk), between Manitowoc, WI, on the one hand, and, on the other, points in AL, AR, DE, FL, GA, KY, LA, MS, MO, NC, OK, PA, SC, TN, TX, VA, WV, NY, VT, MA, ME, NJ, RI, NH, CT, and DC, and (2) *materials, equipment, and supplies* used in the building, repair, or outfitting of marine vessels, (except commodities in bulk), from points in the aforenamed States and DC to Sturgeon Bay, WI, restricted to the transportation of traffic originating at or destined to the facilities of The Manitowoc Company, Inc., and its divisions and subsidiaries at or near Manitowoc, WI. (Hearing site: Washington, DC.)

MC 75192 (Sub-4F), filed December 13, 1978. Applicant: CHAS. T. BROWN TRUCK LINES, INC., 1208 Buff Street, Greensboro, NC 27406. Representative: Terrell C. Clark, P.O. Box 25, Stanleytown, VA 24168. To operate as a *common carrier*, by motor vehicle, in interstate or foreign commerce, over irregular routes, transporting *structural steel and related iron* and *steel articles* requiring special equipment, from points in Guilford County, NC, to points in GA. (Hearing Site: Greensboro or Raleigh, NC.)

MC 75302 (Sub-13F), filed December 1, 1978. Applicant: DOUDELL TRUCKING CO., a corporation, 555 E. Capital Avenue, Milpitas, CA 95035. Representative: Marvin Handler, 100 Pine Street, Suite 2550, San Francisco, CA 94111. To operate as a *common carrier*, by motor vehicle, in interstate or foreign commerce, over irregular routes, transporting *general commodities* (except those articles of unusual value, classes A and B explosives, used household goods, articles requiring the use of temperature controlled equipment, automobiles, and trucks), between points in AZ, CA, CO, NV, NM, and UT. (Hearing Site: San Francisco, CA, or Phoenix, AZ.)

MC 75320 (Sub-202F), filed November 6, 1978. Applicant: CAMPBELL SIXTY-SIX EXPRESS, INC., P.O. Box 807, Springfield, MO 65801, Representative: Phineas Stevens, 17th Floor, Deposit Guaranty Plaza, P.O. Box 22567, Jackson, MS 39205. To operate as a *common carrier*, by motor vehicle, in interstate or foreign commerce, over regular routes, transporting *general commodities* (except those of unusual value, classes A and B explosives, household goods as defined by the Commission, commodities in bulk, and those requiring special equipment), serving the facilities of DLM, Inc., at or near Malvern, AR, as an off-route point in connection with carrier's otherwise authorized regular-route operations. (Hearing site: Little Rock, AR).

MC 82492 (Sub-208F), filed November 27, 1978. Applicant: MICHIGAN & NEBRASKA TRANSIT CO., INC., 2109 Olmstead Road, P.O. Box 2853, Kalamazoo, MI 49003. Representative: William C. Harris (same address as applicant). To operate as a *common carrier*, by motor vehicle, in interstate or foreign commerce, over irregular routes, transporting *such commodities* as are manufactured, sold, and distributed by persons engaged in the manufacturing, processing, and milling of grain products (except chemicals, frozen foods, uncooked bakery goods, and commodities in bulk), from Hillsdale, MI, to points in TN. (Hearing Site: Washington, DC, or Columbus, OH).

MC 86690 (Sub-5F), filed October 25, 1978. Applicant: BOND TRANSFER CO., INC. 1615 Cuba Street, Baltimore, MD 21230. Representative: Jeremy Kahn, Suite 733, Investment Building, 1511 K Street, NW, Washington, DC 20005. To operate as a *contract carrier*, by motor vehicle, in interstate or foreign commerce, over irregular routes, transporting (1) *paperboard, corrugated board, paper board boxes and corrugated boxes*, from Baltimore, MD, Philadelphia, PA, Ridgefield, NJ, and New Haven, CT, to points, in MA, CT, RI, NY, NJ, PA, DE, MD, VA, NC, SC, and DC, and (2) *scrap and waste paper, and materials and supplies* used in the manufacture of paperboard and boxes, (except commodities in bulk), in the reverse direction, under contracts with the Chesapeake Paperboard Company, of Baltimore, MD, Simpkins Industries, Inc., of Cartonsville, MD, Arrow Cartons, Inc., of Cockeysville, MD, and The J.E. Smith Co., of Millersville, MD. (Hearing site: Washington, DC.)

MC 89153 (Sub-6F), filed December 13, 1978. Applicant: GAYLE T. McGARRY d.b.a. EAGLE TRANSFER & STORAGE CO., P.O. Box F, Lewiston, ID 83501. Representative:

Charles E. Johnson, P.O. Box 1982, Bismarck, ND 58501. To operate as a *common carrier*, by motor vehicle, in interstate or foreign commerce, over irregular routes, transporting (1) *nonalcoholic beverages, glass bottles, and paper cups*, from points in WA, OR, and ID, to points in WA, OR, ID, and MT, (2) *cans*, from Worland, WY, to Spokane, WA, and (3) *vending machines and pop coolers*, from points in CA and WA, to points in WA, OR, ID, and MT. (Hearing site: Spokane, WA, or Portland, OR.)

MC 95540 (Sub-1057F), filed November 8, 1978. Applicant: WATKINS MOTOR LINES, INC., 1144 W. Griffin Road, P.O. Box 1636, Lakeland, FL 33802. Representative: Benjy W. Fincher (same address as applicant). To operate as a *common carrier*, by motor vehicle, in interstate or foreign commerce, over irregular routes, transporting *meats, meat products and meat byproducts, and articles distributed by meat-packing houses*, as described in sections A and C of Appendix I to the report in *Descriptions in Motor Carrier Certificates*, 61 M.C.C. 209 and 766, (except hides and commodites in bulk), from Omaha, NE, to points in CT, DE, IL, IN, ME, MD, MA, MI, NJ, NY, OH, PA, VA, WV, and DC. (Hearing site: Omaha, NE, or Washington, DC.)

MC 95540 (Sub-1058F), filed November 8, 1978. Applicant: WATKINS MOTOR LINES, INC., 1144 W. Griffin Road, P.O. Box 1636, Lakeland, FL 33802. Representative: Benjy W. Fincher (same address as applicant). To operate as a *common carrier*, by motor vehicle, in interstate or foreign commerce, over irregular routes, transporting *meats, meat products and meat byproducts, and articles distributed by meat-packing houses*, as described in sections A and C of Appendix I to the report in *Descriptions in Motor Carrier Certificates*, 61 M.C.C. 209 and 766, (except hides and commodities in bulk), from the facilities of MBPXL Corporation, at or near Dodge City, KS, to points in AL, AZ, CA, DE, CT, FL, GA, LA, ME, MD, MA, MS, NH, NJ, NM, NY, NC, PA, RI, SC, TN, and VT, restricted to the transportation of traffic originating at the named origin. (Hearing site: Wichita or Kansas City, KS.)

MC 95540 (Sub-1059F), filed November 8, 1978. Applicant: WATKINS MOTOR LINES, INC., P.O. Box 1636, 1144 W. Griffin Road., Lakeland, FL 33802. Representative: Benjy W. Fincher (same address as applicant). To operate as a *common carrier*, by motor vehicle, in interstate or foreign commerce, over irregular routes, transporting *cleaning compounds*, from Corsicana, TX, to Deepwater, NJ. (Hearing site: New York, NY, or Washington, DC.)

MC 95540 (Sub-1060F), filed November 8, 1978. Applicant: WATKINS MOTOR LINES, INC., P.O. Box 1636, 1144 W. Griffin Road, Lakeland, FL 33802. Representative: Benjy W. Fincher (same address as applicant). To operate as a *common carrier*, by motor vehicle, in interstate or foreign commerce, over irregular routes, transporting *wearing apparel, store displays, store fixtures, and store supplies*, from Dallas, TX, to Orlando and Tampa, FL, and Atlanta, GA. (Hearing site: Minneapolis, MN, or Washington DC.)

MC 95540 (Sub-1061F), filed November 8, 1978. Applicant: WATKINS MOTOR LINES, INC., P.O. Box 1636, 1144 W. Griffin Road, Lakeland, FL 33802. Representative: Benjy W. Fincher (same address as applicant). To operate as a *common carrier*, by motor vehicle, in interstate or foreign commerce, over irregular routes, transporting *such merchandise as is dealt in by grocery and food business houses* (except commodities in bulk, in tank vehicles), from Atlanta, GA, to points in AL, AR, FL, KY, LA, MS, NC, SC, TN, VA, and WV. (Hearing site: Atlanta, GA, or Washington DC.)

MC 95540 (Sub-1062F), filed November 8, 1978. Applicant: WATKINS MOTOR LINES, INC., P.O. Box 1636, 1144 W. Griffin Road, Lakeland, FL 33802. Representative: Benjy W. Fincher (same address as applicant). To operate as a *common carrier*, by motor vehicle, in interstate or foreign commerce, over irregular routes, transporting *wearing apparel, store displays, store fixtures, and store supplies*, from Minneapolis, MN, to Philadelphia, PA. (Hearing site: Minneapolis, MN, or Washington DC.)

MC 95540 (Sub-1063F), filed November 8, 1978. Applicant: WATKINS MOTOR LINES, INC., P.O. Box 1636, 1144 W. Griffin Road, Lakeland, FL 33802. Representative: Benjy W. Fincher (same address as applicant). To operate as a *common carrier*, by motor vehicle, in interstate or foreign commerce, over irregular routes, transporting *textiles and textile products*, from points in GA, to points in CT, DE, MD, MA, NJ, NY, PA, and RI. (Hearing site: New York, NY, or Washington, DC.)

MC 100666 (Sub-413F), filed November 9, 1978. Applicant: MELTON TRUCK LINES, INC., an Arkansas corporation, P.O. Box 7666, Shreveport, LA 71107. Representative: Wilburn L. Williamson, 280 National Foundation Life Building, 3535 N.W. 58th Street, Oklahoma City, OK 73112. To operate as a *common carrier*, by motor vehicle, in interstate or foreign commerce, over irregular routes, transporting: *cement pipe* and *fittings for cement pipe*, from Van Buren, AR, to points in the United States in and west of MN, IA, MO, AR, and LA. (Hearing site: St. Louis, MO).

MC 103552 (Sub-11F), filed December 7, 1978. Applicant: THE FARER TRANSPORTATION CO., a corporation, 15 West Dover Street, Waterbury, CT 06720. Representative: Jeremy Kahn, Suite 733 Investment Building, 1511 K Street, NW., Washington, DC 20005. To operate as a *common carrier*, by motor vehicle, in interstate or foreign commerce, over irregular routes, transporting *newspapers, newspaper supplements, advertising matter, books, magazines, and periodicals*, from New Haven and Waterbury, CT, to Boylston and Worcester, MA. (Hearing site: Washington, D.C.)

MC 105413 (Sub-40F), filed December 8, 1978. Applicant: PETROLEUM TRANSPORT SERVICE, INC., 3908 Richland Drive, Council Bluffs, IA 51510. Representative: Arthur J. Cerra, 2100 Ten Main Center, P.O. Box 19251, Kansas City, MO 64141. To operate as a *common carrier*, by motor vehicle, in interstate or foreign commerce, over irregular routes, transporting *fertilizer and fertilizer materials*, in bulk, from the facilities of Land O'Lakes Agricultural Services Division, at or near Mason City, IA, to points in MN, NE, ND, SD, and WI. (Hearing site: Omaha, NE.)

MC 105813 (Sub-251F), filed December 1, 1978. Applicant: BELFORD TRUCKING CO., INC., 1759 S.W. 12th Street, P.O. Box 2009, Ocala, FL 32670. Representative: Arnold L. Burke, 180 N. LaSalle Street, Chicago, IL 60601. To operate as a *common carrier*, by motor vehicle, in interstate or foreign commerce, over irregular routes, transporting *meat, meat products and meat byproducts*, and *articles* distributed by meat-packing houses as described in sections A and C of Appendix I to the report in *Descriptions in Motor Carrier Certificates*, 61 M.C.C. 209 and 766 (except hides and commodities in bulk), from the facilities of John Morrell & Co., at Montgomery, AL, to those points in the United States in and east of TX, OK, KS, NE, AS, and ND, restricted to the transportation of traffic originating at the named origin facilities. (Hearing site: Birmingham, AL.)

MC 106400 (Sub-115F), filed November 8, 1978. Applicant: KAW TRANSPORT CO., a corporation, P.O. Box 12628, North Kansas City, MO 64116. Representative: James C. Swearengen, P.O. Box 456, Jefferson City, MO 65102. To operate as a *common carrier*, by motor vehicle, in interstate or foreign commerce, over regular routes, transporting *chemicals*, in bulk, in

tank vehicles, from the facilities of Vulcan Materials Co., at Wichita, KS, to Houston TX, and points in AL, AZ, CA, CT, DE, FL, GA, ID, KY, LA, ME, MD, MA, MN, MS, MT, NV, NH, NJ, NM, NY, NC, ND, OH, OR, PA, RI, SC, SD, TN, UT, VT, VA, WA, WV, and WI. (Hearing site: Kansas City, MO.)

MC 107012 (Sub-327F), filed December 18,, 1978. Applicant: NORTH AMERICAN VAN LINES, INC., 5001 U.S. Hwy 30 West, P.O. Box 988, Fort Wayne, IN 46801. Representative: David D. Bishop (same address as applicant). To operate as a *common carrier,* by motor vehicle, in interstate or foreign commerce, over regular routes, transporting *toys, games,* and *accessories* for toys and games, from the facilities of Mattel Toys, at or near Edison, NJ, and City of Industry, CA, to points in the United States (except AK and HI). (Hearing site: Los Angeles or San Francisco, CA.)

MC 107403 (Sub-1151F), filed December 11, 1978. Applicant: MATLACK, INC., Ten West Baltimore Avenue, Lansdowne, PA 19050. Representative: Martin C. Hynes, Jr., (same address as applicant). To operate as a *common carrier,* by motor vehicle, in interstate or foreign commerce, over irregular routes, transporting *lead oxides,* in bulk, in tank vehicles, from Stowe, PA, to Winston-Salem, NC. (Hearing site: Washington, DC.)

MC 108053 (Sub-155F), filed November 8, 1978. Applicant: LITTLE AUDREY'S TRANSPORTATION CO., INC., P.O. Box 129, Fremont, NE 68025. Representative: Arnold L. Burke, 180 N. LaSalle Street, Chicago, IL 60601. To operate as a *common carrier,* by motor vehicle, in interstate or foreign commerce, over irregular routes, transporting *glues, adhesives, and gelatines,* (except commodities in bulk), from Chicago, IL, to points in CA, OR, and WA. (Hearing site: Chicago, IL.)

MC 108119 (Sub-112F), filed January 2, 1979. Applicant: E. L. MURPHY TRUCKING CO., a corporation, P.O. Box 43010, St. Paul, MN 55164. Representative: Andrew R. Clark, 1000 First National Bank Building, Minneapolis, MN 55402. To operate as a *common carrier,* by motor vehicle, in interstate or foreign commerce, over irregular routes, transporting (1) *valves, hydrants, and pumps* and (2) *parts and accessories* for the commodities in (1) above, between Traverse City, MI, Elmhurst, IL, and St. Paul, MN, on the one hand, and, on the other, points in the United States (except AK and HI). (Hearing site: Minneapolis, MN, or Washington DC.)

MC 108341 (Sub-125F), filed November 22, 1978. Applicant: MOSS TRUCKING CO., INC., 3027 N. Tryon Street, P.O. Box 26125, Charlotte, NC 28213. Representative: Jack F. Counts (same address as applicant). To operate as a *common carrier,* by motor vehicle, in interstate or foreign commerce, over irregular routes, transporting *piling* and *pile-driving equipment,* from the facilities of Mississippi Valley Equipment Co., Inc., at or near Memphis, TN, and New Orleans, LA, to those points in the United States in and east of MN, IA, MO, AR, and LA. (Hearing site: St. Louis, MO, or Washington, DC.)

MC 108460 (Sub-69F), filed November 6, 1978. Applicant: PETROLEUM CARRIERS CO., a corporation, P.O. Box 762, Sioux Falls, SD 57101. Representative: Gary Mundenke (same address as applicant). To operate as a *common carrier,* by motor vehicle, in interstate or foreign commerce, over irregular routes, transporting *liquid fertilizer,* in bulk, in tank vehicles, from the facilities of Terra Chemicals International, Inc., at or near Blair, NE, to points in IL, IA, MN, SD, and WI. (Hearing site: Sioux Falls, SD, or Sioux City, IA.)

MC 110420 (Sub-792F), filed November 7, 1978. Applicant: QUALITY CARRIERS, INC., P.O. Box 186, Pleasant Prairie, WI 53158. Representative: John R. Sims, Jr., 915 Pennsylvania Building, 425 13th Street, NW., Washington, DC 20004. To operate as a *common carrier,* by motor vehicle, in interstate or foreign commerce, over irregular routes, transporting *liquid chemicals, petroleum oil, and petroleum lubricating oil,* in bulk, in tank vehicles, from Bristol, Croydon, and Philadelphia, PA, to points in IL, IN, IA, KY, MI, MN, MO, OH, and WI. (Hearing site: Washington, DC, or Philadelphia, PA.)

MC 112801 (Sub-216F), filed November 22, 1978. Applicant: TRANSPORT SERVICE CO., a corporation, 2 Salt Creek Lane, Hinsdale, IL 60521. Representative: E. Stephen Heisley, 805 McLachlen Bank Building, 666 Eleventh Street, NW, Washington, DC 20001. To operate as a *common carrier,* by motor vehicle, in interstate or foreign commerce, over irregular routes, transporting *liquid fertilizer,* in bulk, in tank vehicles, from Ottawa, IL, to points in IL, IN, IA, MO, MN, WI, OH, PA, MI, KY, NE, SD, and ND. (Hearing site: Chicago, IL, or Washington, DC.)

MC 112801 (Sub-217F), filed November 22, 1978. Applicant: TRANSPORT SERVICE CO., a corporation, 2 Salt Creek Lane, Hinsdale, IL 60521. Representative: E. Stephen Heisley, 805 McLachlen Bank Building, 666 Eleventh Street, NW, Washington, DC 20001. To operate as a *common carrier,* by motor vehicle, in interstate or foreign commerce, over irregular routes, transporting (1) *rolling processing fluids, wire drawing compounds,* and *lubricating oils,* in bulk, in tank vehicles, from the facilities of Ironsides Co., at or near Columbus, OH, to points in the United States (except AK and HI); and (2) *materials, equipment and supplies* used in the manufacture and distribution of the commodities named in (1) above, in bulk, in tank vehicles, in the reverse direction. (Hearing site: Columbus, OH.)

MC 112801 (Sub-218F), filed November 22, 1978. Applicant: TRANSPORT SERVICE CO., a corporation, 2 Salt Creek Lane, Hinsdale, IL 60521. Representative: E. Stephen Heisley, 805 McLachlen Bank Building, 666 Eleventh Street, NW., Washington, DC 20001. To operate as a *common carrier,* by motor vehicle, in interstate or foreign commerce, over irregular routes, transporting *liquefied petroleum gas,* in bulk, in tank vehicle from East Chicago, IN, to points in GA, IL, IA, KY, MI, MN, MO, OH, PA, and WI. (Hearing site: Chicago, IL)

NOTE.—Any certificate issued in this proceeding shall be limited in point of time to a period expiring 5 years from the date of issuance of the certificate.

MC 113509 (Sub-9F), filed January 3, 1979. Applicant: DANTE GENTILINI TRUCKING, INC., P.O. Box 387, West Chicago, IL 60185. Representative: Donald S. Mullins, 4704 W. Irving Park Road, Chicago, IL 60641. To operate as a *contract carrier,* by motor vehicle, in interstate or foreign commerce, over irregular routes, transporting *building erection equipment* used in the construction industry, between the facilities of Waco Scaffold & Shoring Co., at or near Addison, IL, on the one hand, and, on the other, points in AR, IN, IA, KS, KY, MI, MN, MO, OH, PA, TN, and WI, under contract with Waco Scaffold & Shoring Co., of Arlington Heights, IL. (Hearing site: Chicago, IL.)

MC 113666 (Sub-140F), filed November 13, 1978. Applicant: FREEPORT TRANSPORT, INC., 1200 Butler Road, Freeport, PA 16229. Representative: D. R. Smetanick (same address as applicant) To operate as a *common carrier,* by motor vehicle, in interstate or foreign commerce, over irregular routes, transporting *plastic pellets,* in bulk, in tank vehicles, (1) from Donora, PA, to points in IN, MI, MS, NY, OH, and TX, and (2) from Washington, PA, to points in IN, MI, MS, and TX. (Hearing site: Pittsburgh, PA, or Washington, DC.)

MC 114552 (Sub-189F), filed December 1, 1978. Applicant: SENN TRUCKING CO., a corporation P.O. Box 220, Newberry, SC 39108. Representative:

Virgil H. Smith, Suite 12, 1587 Phoenix Boulevard, Atlanta, GA 30349. To operate as a *common carrier*, by motor vehicle, in interstate or foreign commerce, over irregular routes, transporting (1) *newsprint paper*, from points in Laurens County, GA, to points in AL, FL, GA, KY, LA, MS, NC, SC, TN, VA, TX, AR, MO, IL, IN, OH, WV, MD, PA, OK, and KS; and (2) *waste newspapers, cores*, and *materials, supplies, and equipment* used in the manufacture of newsprint paper, from points in AL, FL, GA, KY, LA, MS, NC, SC, TN, VA, TX, AR, MO, IL, IN, OH, WV, MD, PA, OK, and KS, to points in Laurens County, GA. (Hearing site: Atlanta, GA.)

MC 114569 (Sub-268F), filed January 2, 1979. Applicant: SHAFFER TRUCKING, INC., P.O. Box 418, New Kingstown, PA 17072. Representative: N. L. Cummins (same address as applicant). To operate as a *common carrier*, by motor vehicle, in interstate or foreign commerce, over irregular routes, transporting *foodstuffs* (except in bulk), from the facilities of Hanover Brands, Inc., at or near Hanover, PA, to points in AZ, AR, CO, ID, IL, IA, IN, KS, KY, LA, MN, MS, MO, NE, NV, NM, ND, OK, SD, TX, UT, WI, and WY. (Hearing site: Harrisburg, PA, or Washington, DC.)

NOTE:—Dual operations may be at issue in this proceeding.

MC 114829 (Sub-19F), filed December 14, 1978. Applicant: GENERAL CARTAGE CO., INC., P.O. Box 417, Rock Falls, IA 61081. Representative: Bernard J. Kompare, 10 S. LaSalle Street, Suite 1600, Chicago, IL 60603. To operate as a *contract carrier*, by motor vehicle, in interstate or foreign commerce, over irregular routes, transporting *iron and steel articles*, from points in Lake and Porter Counties, IN, to Rock Falls, IL, under contract with National Manufacturing Company, of East Rock Falls, IL. (Hearing site: Chicago, IL.)

MC 115233 (Sub-6F), filed December 8, 1978. Applicant: MARSHALL STORAGE CO., a corporation, Hwy 19, P.O. Box 145, Marshall, MN 56258. Representative: Gene P. Johnson, P.O. Box 2471, Fargo, ND 58108. To operate as a *common carrier*, by motor vehicle, in interstate or foreign commerce, over irregular routes, transporting *canned foodstuffs*, from the facilities of Big Stone, Inc., at or near Arlington and Ortonville, MN, and Bloomer, WI, to points in AR, IL, IA, KS, and MO. (Hearing site: Fargo, ND, or Minneapolis, MN.)

MC 115570 (Sub-19F), filed October 27, 1978. Applicant: WALTER A. JUNGE, INC., 3818 S.W. 84th Street, Tacoma, WA 98491. Representative: George R. LaBissoniere, 1100 Norton Building, Seattle, WA 98104. To operate as a *contract carrier*, by motor vehicle, in interstate or foreign commerce, over irregular routes, transporting *paper, paper articles, wood pulp, and such commodities as are manufactured or distributed by manufacturers or converters of cellulose materials and products*, between points in CA, ID, NV, OR, and WA, under contract with Container Corporation of America, of Santa Clara, CA. (Hearing site: San Francisco, CA.)

NOTE.—Dual operations may be at issue in this proceeding.

MC 116273 (Sub-218F), filed December 8, 1978. Applicant: D & L TRANSPORT, INC., 3800 South Laramie Avenue, Cicero, IL 60650. Representative: William R. Lavery (same address as applicant). To operate as a *common carrier*, by motor vehicle, in interstate or foreign commerce, over irregular routes, transporting *liquid aluminum ortho phosphate*, in bulk, in tank vehicles, from Firebrick, OH, to Chicago, IL. (Hearing site: Chicago, IL.)

MC 116319 (Sub-11F), filed January 2, 1979. Applicant: WASHINGTON TRUCKING, INC., P.O. Box 107, Darrington, WA 98241. Representative: George R. LaBissoniere, 1100 Norton Building, Seattle, WA 98104. To operate as a *common carrier*, by motor vehicle, in interstate or foreign commerce, over irregular routes, transporting *cement*, (1) from Portland, OR, to points in WA and OR and (2) from Everett and Seattle, WA, to points in OR. (Hearing site: Seattle, WA.)

MC 116459 (Sub-79F), filed December 14, 1978. Applicant: RUSS TRANSPORT, INC., P.O. Box 4022, Chattanooga, TN 37405. Representative: Charles T. Williams (same address as applicant). To operate as a *common carrier*, by motor vehicle, in interstate or foreign commerce, over irregular routes, transporting *vegetable oils* and *vegetable oil products*, in bulk, in tank vehicles, between the facilities of Central Soya Company, Inc., in Hamilton County, TN, on the one hand, and, on the other, those points in the United States in and east of ND, SD, NE, KS, OK, and TX. (Hearing site: Chattanooga, TN, or Chicago, IL.)

MC 116519 (Sub-57F), filed January 2, 1979. Applicant: FREDERICK TRANSPORT LIMITED, R. R. 6, Chatham, ON, Canada N7M 5J6. Representative: S. Harrison Kahn, Suite 733 Investment Building, 1511 K Street NW., Washington, DC 20005. To operate as a *common carrier*, by motor vehicle, in foreign commerce only, over irregular routes, transporting *such commodities* as are dealt in or used by dealers and manufacturers of agricultural equipment, industial equipment, and lawn and leisure products, (except commodities in bulk), from Lexington, NE, to the port of entry on the International Boundary Line between the United States and Canada in MI, NY, VT, NH, and ME. (Hearing site: Washington, D.C.)

MC 117119 (Sub-710F), filed January 2, 1979. Applicant: WILLIS SHAW FROZEN EXPRESS, INC., P.O. Box 188, Elm Springs, AR 72728. Representative: L. M. McLean (same address as applicant). To operate as a *common carrier*, by motor vehicle, in interstate or foreign commerce, over irregular routes, transporting *such commodities* as are used by restaurants, (except commodities in bulk) from the facilities of Foodmaker, Inc., at San Diego, CA, to Chicago, IL, Denver, CO, Houston, TX, and Seattle, WA, restricted to the transportation of traffic originating at the named origin and destined to the named distinations. (Hearing site: Washington, DC.)

MC 117165 (Sub-49F), filed December 27, 1978. Applicant: ST. LOUIS FREIGHT LINES, INC., P.O. Box 2140, Michigan City, IN 46360. Representative: James M. Hodge, 1980 Financial Center, Des Moines, IA 50309. To operate as a *common carrier*, by motor vehicle, in interstate or foreign commerce, over irregular routes, transporting (1) *lumber and composition board*, from the facilities of Champion International Corporation, at or near (a) Oxford, MS, (b) Catawba, Charleston, and Orangeburg, SC, and (c) South Boston, VA, to points in IL, IN, MI, OH, and WI, and (2) *materials, equipment, and supplies* used in the manufacture of the commodities in (1) above, (except commodities in bulk), in the reverse direction. (Hearing site: Chicago, IL.)

MC 117940 (Sub-302F), filed November 8, 1978. Applicant: NATIONWIDE CARRIERS, INC., P.O. Box 104, Maple Plain, MN 55359. Representative: Allan L. Timmerman (same address as applicant). To operate as a *common carrier*, by motor vehicle, in interstate or foreign commerce, over irregular routes, transporting *foodstuffs* (except in bulk), from the facilities of General Mills, Inc., at or near (1) Chicago, IL, and (2) Buffalo, NY, to the facilities of General Mills, Inc., at or near Fostoria, OH, restricted to the transportation of traffic originating at the name origins and destined to the named destination. (Hearing site: Minneapolis or St. Paul, MN.)

MC 118142 (Sub-194F), filed November 20, 1978. Applicant: M. BRUENGER & CO., INC., 6250 North Broadway, Wichita, KS 67219. Representative: Lester C. Arvin, 814 Century Plaza Building, Wichita, KS 67202. To operate as a *common carrier*, by motor

vehicle, in interstate or foreign commerce, over irregular routes, transporting (1) *extruded or injection molded rubber and plastic products,* from the facilities of the Entek Corporation of America, at Irving, TX, to points in the United States (except AK and HI); and (2) *materials, supplies and equipment* used in the manufacture and distribution of extruded or injection molded rubber and plastic products, from points in the United States (except AK and HI), to Irving, TX. (Hearing Site: Dallas, TX, or Wichta, KS.)

NOTE:—Dual operations are at issue in this proceeding.

MC 118159 (Sub-310F), filed January 5, 1979. Applicant: NATIONAL REFRIGERATED TRANSPORT, INC., P.O. Box 51366 Dawson Station, Tulsa, OK 74151. Representative: Warren L. Troupe, 2480 E. Commercial Boulevard, Ft. Lauderdale, FL 33308. To operate as a *common carrier,* by motor vehicle, in interstate or foreign commerce, over irregular routes, transporting (1) *petroleum, petroleum products, vehicle body sealer, and sound deadener compounds,* (except commodities in bulk, in tank vehicles), and *filters,* from the facilities of Quaker State Oil Refining Corporation, in Warren County, MS, to points in the United States in and east of ND, SD, NE, CO, OK, and TX, (2) *petroleum, petroleum products, vehicle body sealer, sound deadener compounds,* (except commodities in bulk, in tank vehicles), *and filters,* and (3) *materials, equipment and supplies* used in the manufacture and distribution of the commodities in (1) and (2) above, from points in AL, GA, IL, IN, KY, NY, OH, OK, PA, RI, SC, VA, and WV, to the facilities of Quaker State Oil Refining Corporation, in Warren County, MS, restricted in (1), (2), and (3) above to the transportation of traffic originating at or destined to Warren County, MS. (Hearing site: Atlanta, GA.)

MC 118318 (Sub-41F) filed January 5, 1979. Applicant: IDA-CAL FREIGHT LINES, INC., P.O. Drawer M, Nampa, ID 83651. Representative: Timothy R. Stivers, P.O. Box 162, Boise, ID 83701. To operate as a *common carrier,* by motor vehicle, in interstate or foreign commerce, over irregular routes, transporting *such commodities* as are dealt in or used by grocery and food business houses, (except commodities in bulk), from the facilities of Procter and Gamble Distributing Company, in CA, to points in WA and those in Box Elder, Cache, Davis, Morgan, Salt lake, Tooele, Utah, and Weber Counties, UT, restricted to the transportation of traffic originating at the named origin facilities Hearing site: Boise, ID, or Spokane, WA.)

NOTE.—The person or persons who appear to be engaged in common control must either file an application under 49 U.S.C. § 11343(a) (1978) (formerly Section 5(2) of the Interstate Commerce Act), or submit an affidavit indicating why such approval is unnecessary.

MC 119789 (Sub-536F) filed December 28, 1978. Applicant: CARAVAN REFRIGERATED CARGO, INC. P.O. Box 226188, Dallas, TX 75266. Representative: James K. Newbold, Jr. (same address as applicant). To operate as a *common carrier,* by motor vehicle, in interstate or foreign commerce, over irregular routes, transporting *electrical appliances, electrical equipment, and electrical supplies,* from the facilities of Square D Company, at or near Dallas, TX, to points in FL and GA, restricted to the transportation of traffic originating at the named origin. (hearing site: Cincinnati, OH).

MC 120646 (Sub-26F) filed November 8, 1978. Applicant: BRADLEY FREIGHT LINES, INC., 35 Garfield Street, Asheville, NC 28803. Representative: Henry E. Seaton, 929 Pennsylanania Building, 425 13th St., NW., Washington, DC 20004. To operate as a *common carrier,* by motor vehicle, in interstate or foreign commerce, over irregular routes, transporting (1) *textiles and textile products,* (except commodities in bulk), from points in Swain and Jackson Counties, NC, to points in the United States (except AK and HI), and (2) *textiles, textile products, and commodities* used in the manufacture of textile products, (except commodities in bulk), in the reverse direction. (hearing site: Asheville, NC, or Gatlinburg, TN.

MC 120910 (Sub-15F) filed November 8, 1978. Applicant: SERVICE EXPRESS, INC., P.O. Box 1009, Tuscaloosa, AL 35401. Representative: William P. Jackson, Jr., 3426 N. Washington Boulevard, P.O. Box 1240, Arlington, VA 22210. To operate as a *common carrier,* by motor vehicle, in interstate or foreign commerce, over irregular routes, transporting *paper and paper articles* (except commodities in bulk), from the facilities of Union Camp Corporation, at or near Prattville, AL, to points in FL, GA, MS, and TN. (hearing site: Birmingham, AL.)

MC 120978 (Sub-23F), filed January 2, 1979. Applicant: REINHART MAYER, d.b.a. MAYER TRUCK LINE, 1203 South Riverside Drive, Jamestown, ND 58401. Representative: Gene P. Johnson, P.O. Box 2471, Fargo, ND 58108. To operate as a *common carrier,* by motor vehicle, in interstate or foreign commerce, over irregular routes, transporting (1) *beverages* (except in bulk), from Jamestown, ND, to points in SD and those in MN on and west of U.S. Hwy 71; and (2) *materials and supplies* used in the manufacture of beverages, (except commodities in bulk), in the reverse direction. (Hearing site: Fargo, ND.)

MC 121470 (Sub-19F), filed November 8, 1978. Applicant: TANKSLEY TRANSFER CO., a corporation, 801 Cowan Street, Nashville, TN 37207. Representative: John M. Nader, 1600 Citizens Plaza, Louisville, KY 40202. To operate as a *common carrier,* by motor vehicle, in interstate or foreign commerce, over irregular routes, transporting (1) *mining conveyors and industrial conveyors,* and (2) *materials, equipment and supplies used in the manufacture or distribution of the commodities named in (1),* between the facilities of Goodman Conveyor Corp., at or near Murfreesboro, TN, on the one hand, and, on the other, points in the United States (except CA, CT, DE, FL, HI, ID, ME, MD, MA, NV, NH, NJ, OR, RI, VT, WA, and DC). (Hearing site: Nashville, TN, or Washington, DC.)

MC123272 (Sub-22F), filed December 1, 1978. Applicant: FAST FREIGHT, INC., 9651 S. Ewing Avenue, Chicago, IL 60617. Representative: James C. Hardman, 33 N. La Salle Street, Chicago, IL 60602.

To operate as a *common carrier,* by motor vehicle, in interstate or foreign commerce, over irregular routes, transporting (1) *glass containers, caps and covers,* from the facilities of Glass Containers Corp., at or near Gas City and Indianapolis, IN, to points in AL, GA IL, KY, LA, MI, MS, MO, OH, and TN; and (2) *materials, equipment, and supplies* used in the manufacture and distribution of glass containers, from points in AL, GA, IL, KY, LA, MI, MS, MO, OH, and TN, to the facilities of Glass Containers Corp., at or near Gas City and Indianapolis, IN. (Hearing Site: Chicago, IL, or Indianapolis, IN.)

MC 123272 (Sub-23F), filed December 11, 1978. Applicant: FAST FREIGHT, INC., 9651 S. Ewing, Chicago, IL 60617. Representative: James C. Hardman, 33 North LaSalle Street, Chicago, IL 60602.

To operate as a *common carrier,* by motor vehicle, in interstate or foreign commerce, over irregular routes, transporting *ground clay floor sweeping compounds and absorbents* (except commodities in bulk), from Ripley, MS, to points in TX, OK, KS, MO, IA, MN, WI, and IL. (Hearing Site: Chicago, IL.)

MC 123819 (Sub-75F), filed January 2, 1979. Applicant: ACE FREIGHT LINE, INC., P.O. Box 16589, Memphis, TN 38116. Representative: Bill R. Davis, Suite 101, Emerson Center, 2814 New Spring Road, Atlanta, GA 30339.

To operate as a *common carrier*, by motor vehicle, in interstate or foreign commerce, over irregular routes, transporting *hides, hide trimmings, and tails*, between Memphis, TN, on the one hand, and, on the other, points in AZ, CA, CO, ID, IA, KS, MN, MT, NE, NV, NM, ND, OR, SD, UT, WA, and WY. (Hearing site: Memphis, TN.)

MC 124579 (Sub-26F), filed December 26, 1978. Applicant: WIKEL BULK EXPRESS, INC., Route 2, Huron, OH 44839. Representative: James Duvall, P.O. Box 97, Dublin, OH 43017. To operate as a *common carrier*, by motor vehicle, in interstate or foreign commerce, over irregular routes, transporting *tomato paste*, in bulk, between points in the United States (except AK and HI). (Hearing site: Columbus, OH.)

MC 125433 (Sub-181F), filed December 8, 1978. Applicant: F-B TRUCK LINE CO., a corporation, 1945 South Redwood Road, Salt Lake City, UT 84104. Representative: John B. Anderson (same address as applicant). To operate as a *common carrier*, by motor vehicle, in interstate or foreign commerce, over irregular routes, transporting *indirect evaporative coolers*, from Santa Rosa, CA, to points in the United States (except AK and HI), restricted to the transportation of traffic originating at the facilities of Varicool, Division of H & C Metal Products, Inc. (Hearing site: San Francisco, CA, or Salt Lake City, UT.)

MC 125433 (Sub-182F), filed December 8, 1978. Applicant: F-B TRUCK LINE CO., a corporation, 1945 South Redwood Road, Salt Lake City, UT 84104. Representative: John B. Anderson (same address as applicant). To operate as a *common carrier*, by motor vehicle, in interstate or foreign commerce, over irregular routes, transporting (1) *truck bodies, hydraulic ladders and derricks*, and (2) *component parts and equipment* for the commodities named in (1) above, from the facilities of Utility Body Company at or near Berkeley, CA, to points in the United States (except AK and HI), restricted to the transportation of traffic originating at the named origin facilities. (Hearing site: San Francisco, CA, or Salt Lake City, UT.)

MC 125433 (Sub-183F), filed December 12, 1978. applicant: F-B TRUCK LINE CO., a corporation, 1945 South Redwood Road, Salt Lake City, UT 84104. Representative: John B. Anderson (same address as applicant). To operate as a *common carrier*, by motor vehicle, in interstate or foreign commerce, over irregular routes, transporting *mahogany hot tubs*, from Alameda and Long Beach, CA, and Portland, OR, to points in the United States (except AK and HI), restricted to the transportation of traffic having a prior movement by water in foreign commerce. (Hearing site: Los Angeles, CA, or Salt Lake City, UT.)

MC 125470 (sub-37F), filed November 9, 1978. Applicant: MOORE'S TRANSFER, INC., P.O. Box 1151, Norfolk, NE 68701. Representative: Gailyn L. Larsen, P.O. Box 81849, Lincoln, NE 68501. To operate as a *common carrier*, by motor vehicle, in interstate or foreign commerce, over irregular routes, transporting *agricultural pesticides* (except in bulk), from Fremont, NE, to points in AZ, AR, CO, ID, IL, IN, IA, KS, KY, LA, MN, MO, MT, NM, ND, OK, SD, TN, TX, UT, WI, and WY. (Hearing site: Trenton, NJ, or Omaha, NE.)

MC 125506 (sub-31F), filed November 6, 1978. Applicant: JOSEPH ELETTO TRANSFER, INC., 33 West Hawthorne Avenue., Valley Stream, NY 11580. Representative: Bruce J. Robbins, 118-21 Queens Boulevard., Forest Hills, NY 11375. To operate as a *contract carrier*, by motor vehicle, in interstate or foreign commerce, over irregular routes, transporting *such commodities* as are dealt in or used by retail specialty shops, between New York, NY, and points in NJ, under contract with Lane Bryant, Inc., of New York, NY. Condition: Issuance of a certificate in this proceeding is subject to prior or coincidental cancellation of a portion of carrier's certificate (shown below), in MC-125506 sub 13), between shipper's stores, distribution centers, and warehouses located at New York, NY, and Paramus and Eatontown, NJ. (Hearing site: New York, NY.)

MC 127042 Sub-233F), filed December 15, 1978. Applicant: HAGEN, INC., P.O. Box 98, Leeds Station, Sioux City, IA 51108. Representative: Robert G. Tessar (same address as applicant). To operate as a *common carrier*, by motor vehicle, in interstate or foreign commerce, over irregular routes, transporting *foodstuffs* (except commodities in bulk), from Kansas City, MO, to points in IL, IN, IA, KS, MI, MN, NE, ND, OH, SD, and WI. (Hearing Site: Kansas City, MO.)

MC 127042 (Sub-234F), filed December 18, 1978. Applicant: HAGEN, INC., P.O. Box 98, Leeds Station, Sioux City, IA 51108. Representative: Robert G. Tessar (same address as applicant). To operate as a *common carrier*, by motor vehicle, in interstate or foreign commerce, over irregular routes, transporting *dairy products* (except commodities in bulk), from Lena, IL, to points in KS and MO. (Hearing site: Kansas City, MO.)

MC 129032 (Sub-68F), filed December 8, 1978. Applicant: TOM INMAN TRUCKING, INC., 6015 So. 49th West Avenue, Tulsa, OK 74107. Representative: Michael Rubin, 256 Montgomery Street, San Francisco, CA 94104. To operate as a *common carrier*, by motor vehicle, in-interstate or foreign commerce, over irregular routes, transporting *automotive parts and materials and supplies* used in the manufacture of automotive parts (except commodities in bulk), between points in the United States (except AK and HI). (Hearing site: Detroit, MI, or Chicago, IL.)

MC 133330 (Sub-16F), filed November 1, 1978. Applicant: HALVOR LINES, INC., 3260 Carlton Avenue, Duluth, MN 55806. Representative: Andrew R. Clark, 1000 First National Bank, Minneapolis, MN 55402. To operate as a *contract carrier*, by motor vehicle, in interstate or foreign commerce, over irregular routes, transporting (1) *snowmobiles, sportswear, trailers, water scooters, boats, and motorcycles*, and (2) *parts and accesories for the commodities named in (1)*, from points in the United States (except AK and HI) to Idaho Falls, ID, Duluth, MN, and ports of entry on the International Boundary line between the United States and Canada at Champlain, NY, Port Huron, Detroit, and Sault Ste. Marie, MI, and Grand Portage, MN, under contracts with Bombardier Corp., of Duluth, MN, and Bombardier, Ltd., of Montreal, Canada. (Hearing site: Minneapolis, MN.)

MC 134592 (Sub-16F), filed November 24, 1978. Applicant: HERB MOORE AND HAZEL MOORE d.b.a. H & H TRUCKING CO., 10360 N. Vancouver Way, Portland, OR 97211. Representative: Philip G. Skofstad, P.O. Box 594, Gresham, OR 97030. To operate as a *common carrier*, by motor vehicle, in interstate or foreign commerce, over irregular routes, transporting (1) *malt beverages*, from Los Angeles, Van Nuys, and Fairfield, CA, to Everett, WA; and (2) *wine*, from Rutherford, St. Helena, Sonoma, Union City, Menlo Park, Saratoga, San Jose, Lodi, Livermore, and Madera, CA, to Everett, WA. (Hearing site: Seattle, WA.)

MC-134813 (Sub-2F), filed December 11, 1978. Applicant: WESTERN CARTAGE, INC., 2921 Dawson Road, Tulsa, OK 74110. Representative: Michael R. Vanderburg, 5200 South Yale, Suite 400, Tulsa, OK 74135. To operate as a *contract carrier*, by motor vehicles, in interstate or foreign commerce, over irregular routes, transporting *iron and steel articles and galvanized metal materials*, between the facilities of Rogers Gavanizing Company, at Tulsa, OK, and points in the United States (except AK and HI), under contract with Rogers Galvanizing Company, of Tulsa, OK. Hearing site: Tulsa, OK.)

NOTE.—Dual operations may be involved.

MC-134813 (Sub-3F), filed December 11, 1978. Applicant: WESTERN CARTAGE, INC., 2921 Dawson Road, Tulsa, OK 74110. Representative: Michael R. Vanderburg, 5200 South Yale, Suite 400, Tulsa, OK 74135. To operate as a *contract carrier*, by motor vehicle, in interstate or foreign commerce, over irregular routes, transporting *waste paper and waste paper products*, between points in the United States (except AK and HI), under contrct with (1) Capitol Waste Materials Company, of Dayton, OH, (2) National Fiber Supply Co., of Chicago, IL, (3) Alton Box Board Company, of Alton, IL, and (4) International Cellulose, Inc., of Chicago, IL. Hearing site: Tulsa, OK, or Chicago, IL.)

MC-135070 (Sub-19F), filed November 20, 1978. Applicant: JAY LINES, INC., P.O. Box 30180, Amarillo, TX 79120. Representative: Gailyn L. Larsen, P.O. Box 81849, Lincoln, NE 68501. To operate as a *common carrier*, by motor vehicles, in interstate or foreign commerce, over irregular routes, transporting *cabinets and parts and accessories for cabinets*, from Mifflinburg and Red Lion, PA, to Wichita, KS. (Hearing site: Wichita, KS, or Amarillo, TX.)

NOTE:—Dual operations may be at issue in this proceeding.

MC-135070 (Sub-20F), filed November 9, 1978. Applicant: JAY LINES, INC., P.O. Box 30180, Amarillo, TX 79120. Representative: Gailyn L. Larsen, P.O. Box 81849, Lincoln, NE 68501. To operate as a *common carrier*, by motor vehicles, in interstate or foreign commerce, over irregular routes, transporting (1) *drugs, cosmetics, plastic articles, weed killng compounds, and animal and poultry feed supplements*, and (2) *materials and supplies used in the manufacture or distribution of the commodities named in (1)*, between the facilities of Eli Lilly and Company, at or near Clinton, Lafayette, and Indianapolis, IN, on the one hand, and, on the other, points in TX. (Hearing site: Indianapolis, IN, or Amarillo, TX.)

NOTE:—Dual operations may be at issue in this proceeding.

MC 135070 Sub 21F, filed November 22, 1978. Applicant: JAY LINES, INC., P.O. Box 30180, Amarillo, TX 79120. Representative: Gailyn L. Larsen, P.O. Box 81849, Lincoln, NE 68501. To operate as a *common carrier*, by motor vehicle, in interstate or foreign commerce, over irregular routes, transporting *meats, meat products and meat byproducts, and articles distributed by meat-packing houses*, as described in sections A and C of Appendix I to the report in *Descriptions in Motor Carrier Certificates*, 61 M.C.C. 209 and 766; (except hides and commodities in bulk), from the facilities of Illini Beef Packers, Inc., at or near Joslin, IL, to points in CT, DE, ME, MD, MA, NH, NJ, NY, PA, RI, VT, VA, WV, and DC, restricted to the transportation of traffic originating at the named origin and destined to the indicated destinations. (Hearing site: Chicago, IL, or Amarillo, TX.)

NOTE.—Dual operations may be at issue in this proceeding.

MC 135170 (Sub-28F), filed November 7, 1978. Applicant: TRI-STATE ASSOCIATES, INC., a Delaware corporation, P.O. Box 188, Federalsburg, MD 21632. Representative: James C. Hardman, 33 N. LaSalle Street, Chicago, IL 60602.

To operate as a *contract carrier*, by motor vehicle, in interstate or foreign commerce, over irregular routes, transporting (1) *containers, container ends, container closures, and container accessories, and (2) materials, equipment, and supplies used in the manufacture or distribution of the commodities named in (1)*, (except commodities in bulk and those requiring the use of special equipment), between points in AL, CT, DE, FL, GA, KY, LA, MD, MS, NJ, NY, NC, OH, PA, SC, TN, VA, WV, and DC, under contract with National Can Corporation, of Chicago, IL. (Hearing site: Washington, DC.)

MC 135213 (Sub-16F), filed December 12, 1978. Applicant: JOE GOOD d./b./a. GOOD TRANSPORTATION, P.O. Box 335, Lovell, WY 82431. Representative: John T. Wirth, 717 17th Street, Suite 2600, Denver, CO 80202. To operate as a *common carrier*, by motor vehicle, in interstate or foreign commerce, over irregular routes, transporting *buildings, building materials, building equipment, and building supplies*, between points in CO, ID, MT, SD, UT, and WY, under contract with Albert D. Wardell Supply Company of Basin, WY. (Hearing site: Denver, CO.)

MC 136220 (Sub-62F), filed November 6, 1978. Applicant: SULLIVAN'S TRUCKING CO., INC., P.O. Box 2164, Ponca City, OK 74601. Representative: G. Timothy Armstrong, Suite 200, Timbergate Office Gardens, 6161 N. May Avenue, Oklahoma City, OK 73112. To operate as a *common carrier*, by motor vehicle, in interstate or foreign commerce, over irregular routes, transporting *petroleum coke*, in bulk, in dump vehicles, (1) from Lake Charles, LA, to points in AL, and (2) from points in KS, to points in AR, CO, MO, NE, OK, and TX. (Hearing site: Oklahoma City, OK, or Kansas City, MO.)

MC 136480 (Sub-2F), filed October 2, 1978. Applicant: WALTER J. LUBINSKI AND KENNETH E. KOCHER, a partnership, d.b.a. L & K TRANSPORTATION, R.D. 4, P.O. Box 199, Dallas, PA 18612. Representative: Morton E. Kiel, Suite 6193, 5 World Trade Center, New York, NY 10048. To operate as a *common carrier*, by motor vehicle, in interstate or foreign commerce, over irregular routes, transporting *confectionery and cough drops*, in vehicles equipped with mechanical refrigeration, from the facilities of Ludens, Inc., at Reading, PA, to points in AZ, CA, CO, ID, NV, NM, OR, UT, and WA. (Hearing site: Washington, DC.)

MC 138512 (Sub-35F), filed December 6, 1978. Applicant: ROLAND'S TRANSPORTATION SERVICES, INC., d.b.a. WISCONSIN PROVISIONS EXPRESS, P.O. Box 477, Cudahy, WI 53110. Representative: Richard C. Alexander, 710 N. Plankinton, Milwaukee, WI 53203. To operate as a *contract carrier*, by motor vehicle, in interstate or foreign commerce, over irregular routes, transporting *foodstuffs, and equipment, materials, and supplies* used in the manufacture and distribution of foodstuffs (except commodities in bulk), between Carthage and Monett, MO, Logan, UT, and points in WI, on the one hand, and, on the other, points in the United States (except AK and HI), under contract with L.D. Schreiber Cheese Co., Inc., of Green Bay, WI. (Hearing site: Milwaukee, WI, or Chicago, IL.)

MC 138882 (Sub-179F), filed November 27, 1978. Applicant: WILEY SANDERS TRUCK LINES, INC., P.O. Drawer 707, Troy, AL 36081. Representative: James W. Segrest (same address as applicant). To operate as a *common carrier*, by motor vehicle, in interstate or foreign commerce, over irregular routes, transporting *such commodities* as are dealt in by farmers cooperative supply houses, and *equipment, materials, and supplies* thereof, from points in the United States (except AK and HI), to points in Calhoun, Holmes, Washington, Jackson, Santa Rosa, Okaloosa, and Walton Counties, FL, and points in AL. (Hearing site: Birmingham or Montgomery, AL.)

MC 138882 (Sub-186F), filed December 15, 1978. Applicant: WILEY SANDERS TRUCK LINES, INC., P.O. Drawer 707, Troy, AL 36081. Representative: James W. Segrest (same address as applicant). To operate as a *common carrier*, by motor vehicle, in interstate or foreign commerce, over irregular routes, transporting *clay and clay products*, from the facilities of Waverly Mineral Products Co., at or near Meigs, GA, to points in NE, KS, MO, IA, MN, WI, and IL. (Hearing site: Atlanta, GA, or Montgomery, AL.)

MC 138960 (Sub-7F), filed November 7, 1978. Applicant: ROKO EXPRESS, INC., a Kentucky corporation, P.O. Box 169, Columbus, OH 43216. Representative: H. Barney Firestone, 10 S. LaSalle, Suite 1600, Chicago, IL 60603. To operate as a *Common carrier*, by motor vehicle, in interstate or foreign commerce, over irregular routes, transporting *aluminum foil*, between Murfreesboro, TN, on the one hand, and, on the other, points in AL, AR, FL, GA, IL, IN, KY, LA, MI, MS, MO, NJ, NY, NC, OH, SC, and TX. (Hearing site: Chicago, IL.)

MC 139482 (Sub-75F), filed December 1, 1978. Applicant: NEW ULM FREIGHT LINES, INC., P.O. Box 877, New Ulm, MN 56073. Representative: James E. Ballenthin, 630 Osborn Building, St. Paul, MN 55102. To operate as a *common carrier*, by motor vehicle, in interstate or foreign commerce, over irregular routes, tranporting *spaghetti and macaroni, spaghetti products, and macaroni products* (except commodities in bulk), from the facilities of C. F. Mueller Company, at or near Jersey City, NJ, to points in IL, IN, OH, and WI. (Hearing Site: New York, NY, or Chicago, IL.)

NOTE.—Dual operations are at issue in this proceeding.

MC 139482 (Sub-77F), filed December 18, 1978. Applicant: NEW ULM FREIGHT LINES, INC., P.O. Box 877, New Ulm, MN 56073. Representative: James E. Ballenthin, 630 Osborn Building, St. Paul, MN 55102. To operate as a *common carrier*, by motor vehicle, in interstate or foreign commerce, over irregular routes, transporting *paper, paper products, materials, supplies, and equipment* used in the manufacture and distribution of paper and paper products, between Savannah and Tifton, GA, on the one hand, and, on the other, those points in the United States in and east of MT, WY, CO, and NM. (Hearing Site: Atlanta, GA, or St. Paul, MN.)

NOTE.—Dual operations are at issue in this proceeding.

MC 139482 (Sub-78F), filed December 18, 1978. Applicant: NEW ULM FREIGHT LINES, INC., P.O. Box 877, New Ulm, MN 56073. Representative: James E. Ballenthin, 630 Osborn Building, St. Paul, MN 55102. To operate as a *common carrier*, by motor vehicle, in interstate or foreign commerce, over irregular routes, transporting *paper, paper products, materials, supplies, and equipment* used in the manufacture and distribution of paper and paper products, between Richmond, VA, on the one hand, and, on the other, those points in the United States in and east of MT, WY, CO, and NM. (Hearing Site: Washington, DC, or St. Paul, MN.)

NOTE.—Dual operations are at issue in this proceeding.

MC 139482 (Sub-80F), filed December 14, 1978. Applicant: NEW ULM FREIGHT LINES, INC., P.O. Box 877, New Ulm, MN 56073. Representative: James E. Ballenthin, 630 Osborn Building, St. Paul, MN 55102. To operate as a *common carrier*, by motor vehicle, in interstate or foreign commerce, over irregular routes, transporting *macaroni, spaghetti, and noodle products* (except commodities in bulk, in tank vehicles), (1) from the facilities of Prince Macaroni Co., at or near Lowell, MA, to points in AL, FL, GA, IL, IN, LA, MI, MN, NC, OH, SC, and TX, and (2) from the facilities of Prince Macaroni Co., at or near St. Paul, MN, to points in FL, LA, MI, and TX. (Hearing site: St. Paul, MN.)

NOTE.—Dual operations are at issue in this proceeding.

MC 140829 (Sub-170F), filed January 2, 1979. Applicant: CARGO CONTRACT CARRIER CORP., a New Jersey corporation, P.O. Box 206, Sioux City, IA 51102. Representative: William J. Hanlon, 55 Madison Ave., Morristown, NJ 07960. To operate as a *common carrier*, by motor vehicle, in interstate or foreign commerce, over irregular routes, transporting *foodstuffs* (except in bulk), from the facilities of The Larsen Company, in WI, to points in CO, CT, DE, IA, KS, ME, MD, MA, MN, MO, NE, NH, NJ, NY, ND, OK, PA, RI, SD, TX, VA, WV, VT, and DC, restricted to the transportation of traffic originating at the named origin. (Hearing site: Green Bay, WI, or Omaha, NE)

NOTE.—Dual operations may be at issue in this proceeding.

MC 140829 (Sub-171F), filed January 2, 1979. Applicant: CARGO CONTRACT CARRIER CORP., a New Jersey corporation, P.O. Box 206, Sioux City, IA 51102. Representative: William J. Hanlon, 55 Madison Ave., Morristown, NJ 07960. To operate as a *common carrier*, by motor vehicle, in interstate or foreign commerce, over irregular routes, transporting *charcoal briquettes*, (1) from Dickinson, ND, to points in AZ, CA, and CO, and (2) from Branson, MO, to points in AZ, AR, CO, KS, OK, and TX. (Hearing site: Washington, DC)

NOTE.—Dual operations may be at issue in this proceeding.

MC 140829 (Sub-175F), filed December 26, 1978. Applicant: CARGO CONTRACT CARRIER CORP., a New Jersey corporation, P.O. Box 206, Sioux City, IA 51102. Representative: William J. Hanlon, 55 Madison Ave., Morristown, NJ 07960. To operate as a *common carrier*, by motor vehicle, in interstate or foreign commerce, over irregular routes, transporting (1) *medicines, cosmetics, plastic boxes, weed killing compounds, animal feed supplements, and poultry feed supplements*, (except commodities in bulk), and (2) *materials and supplies* used in the manufacture of the commodities in (1) above, (except commodities in bulk), (a) between the facilities of Eli Lilly and Company, at or near Clinton, Indianapolis, and Lafayette, IN, and Omaha, NE, on the one hand, and, on the other, points in IA, MN, NE, ND, and SD, and (b) between Mendota, IL, on the one hand, and, on the other, points in IL, IA, MN, NE, ND, and SD. (Hearing site: Indianapolis, IN, or Omaha, NE)

NOTE.—Dual operations may be at issue in this proceeding.

MC 141932 (Sub-6F), filed December 1, 1978. Applicant: POLAR TRANSPORT, INC., 176 King Street, Hanover, MA 02339. Representative: Frank J. Weiner, 15 Court Square, Boston, MA 02108. To operate as a *common carrier*, by motor vehicle, in interstate or foreign commerce, over irregular routes, transporting *paper, paper products, dispenser boxes, materials, equipment, and supplies*, used in the operation of paper mills (except commodities in bulk, and commodities, the transportation of which, because of size and weight, require the use of special equipment), between facilities of Georgia-Pacific Corp., at points in IL, IN, IA, ME, MI, MO, NY, OH, PA, VT, and WI, on the one hand, and, on the other, those points in the United States in and east of ND, SD, NE, KS, OK, and TX. (Hearing Site: Boston, MA, or Hartford, CT).

MC 142370 (Sub-2F), filed November 9, 1978. Applicant: PAUL LONDINO, d.b.a. SCRANTON TRANSFER, 500 N. 3rd St., Fort Smith, AR 72901. Representative: Michael H. Mashburn, 111 Holcomb St., P.O. Box 869, Springdale, AR 72764. To operate as a *common carrier*, by motor vehicle, in interstate or foreign commerce, over regular routes, transporting *general commodities* (except those of unusual value, classes A and B explosives, household goods as defined by the Commission, commodities in bulk, and those requiring special equipment). (A)(1) between Ft. Smith, AR, and junction US Hwys 271 and 270, over US Hwy 271, serving no intermediate points, (2) between junction US Hwys 271 and 270 and Clayton, OK, over US Hwy 271, serving the intermediate points of Tuskahoma, Albion, Talihina, and Summerfield, OK, and the off-route point of Leflore, OK, and (3) between junction US Hwys 271 and 270 and Panola, OK, over US Hwy 270, serving all intermediate points, and (B) between Red Oak, OK, and Talihina, OK, over OK Hwy 82, serving no intermediate points, as an alternate route for operating conven-

ience only, in connection with carrier's authorized regular-route operations. (Hearing site: Ft. Smith or Fayetteville, AR)

MC 142672 (Sub-40F), filed November 24, 1978. Applicant: DAVID BENEUX PRODUCE & TRUCKING, INC., Post Office Drawer F, Mulberry, AR 72947. Representative: Don Garrison, 324 North Second Street, Rogers, AR 72756. To operate as a *common carrier,* by motor vehicle, in interstate or foreign commerce, over irregular routes, transporting *petroleum, petroleum products, emulsified petroleum sizing, and gasoline additives* in containers, in mixed loads with *such commodities* as are dealt in by suppliers and distributors of petroleum products, from the facilities of Texaco, Inc., at or near points in Jefferson County, TX, to points in IL, IN, MO, OH, and TN. (Hearing Site: Houston, TX, or Tulsa, OK)

NOTE.—Dual operations are at issue in this proceeding.

MC 142672 (Sub-41F), filed November 24, 1978. Applicant: DAVID BENEUX PRODUCE & TRUCKING, INC., Post Office Drawer F, Mulberry, AR 72947. Representative: Don Garrison, 324 North Second Street, Rogers AR 72756. To operate as a *common carrier,* by motor vehicle, in interstate or foreign commerce, over irregular routes, transporting *recreational equipment, barbeque equipment, and electrical appliances,* from the facilities of Neosho Products Company, at or near Neosho, MO, to points in AZ, CA, CO, ID, MT, NM, NV, OR, UT, WA, and WY. (Hearing Site: Ft. Smith, AR, or Neosho, MO)

NOTE.—Dual operations are at issue in this proceeding.

MC 142672 (Sub-42F), filed November 24, 1978. Applicant: DAVID BENEUX PRODUCE & TRUCKING, INC., Post Office Drawer F, Mulberry, AR 72947. Representative: Don Garrison, 324 North Second Street, Rogers, AR 72756. To operate as a *common carrier,* by motor vehicle, in interstate or foreign commerce, over irregular routes, transporting *radios, televisions, phono operated* and *sound mechanisms, stands, tables, dynamic loudspeakers, console type loudspeakers, games, and tapes,* from Greeneville and Jefferson City, TN, to points in AR, OK, and TX. (Hearing site: Knoxville, TN, or Ft. Smith, AR)

NOTE.—Dual operations are at issue in this proceeding.

MC 142672 (Sub-43F), filed December 18, 1978. Applicant: DAVID BENEUX PRODUCE & TRUCKING, INC., Post Office Drawer F, Mulberry, AR 72947. Representative: Don Garrison, 324 North Second Street, Rogers, AR 72756. To operate as a *common carrier,* by motor vehicle, in interstate or foreign commerce, over irregular routes, transporting *such commodities* as are dealt in or used by wholesale and retail discount and variety stores, from points in FL, GA, NC, NJ, NY, PA, and SC, to the facilities of Wal-Mart Stores, Inc., at or near Bentonville and Searcy, AR. (Hearing site: Tulsa, OK, or Little Rock, AR)

NOTE.—Dual operations are at issue in this proceeding.

MC 142715 (Sub-19F), filed October 4, 1978, previously published in the FEDERAL REGISTER issue of November 24, 1978 as MC 142715 (Sub-17F). Applicant: LENERTZ, INC., P.O. Box 141, South St. Paul, MN 55075. Representative: Andrew R. Clark, 1000 First National Bank Building, Minneapolis, MN 55402. To operate as a *common carrier,* by motor vehicle, in interstate or foreign commerce, over irregular routes, transporting *foodstuffs and articles distributed by meat-packing houses,* (except hides and commodities in bulk), from the facilities of or used by Shenson Meat Co., Coast Packing Co, Inc., and Geo. A. Hormel & Co. at Omaha, NE, to points in GA, NC, SC, and TN, restricted to the transportation of traffic originating at the named origin facilities. (Hearing site: Minneapolis, MN)

NOTE.—This republication shows the correct docket number assigned to this proceeding as MC 142715 (Sub-19F).

MC 143209 (Sub-7F), filed January 2, 1979. Applicant: HOUSTON FREIGHTWAYS, INC., P.O. Boc 473, Galena Park, TX 77547. Representative: J. G. Dail, Jr., P.O. Box LL, McLean, VA 22101. To operate as a *common carrier,* by motor vehicle, in interstate or foreign commerce, over irregular routes, transporting *rust preventive pipeline coating,* in bulk, in tank vehicles, from Lone Star and Houston, TX, to Fort Collins, CO and Birmingham, AL. (Hearing site: Houston, TX)

MC 143230 (Sub-2F), filed November 9, 1978. Applicant: LUCK TRUCKING, INC., R.R. 1, Box 190, Wolcott, IN 47995. Representative: Walter F. Jones, Jr., 601 Chamber of Commerce Bldg., Indianapolis, IN 46204. To operate as a *common carrier,* by motor vehicle, in interstate or foreign commerce, over irregular routes, transporting *anhydrous ammonia and liquid fertilizer,* in bulk, in tank vehicles, between points in KY, IL, IN, MI, and OH. (Hearing site: Indianapolis, IN or Chicago, IL)

MC 143346 (Sub-1F), filed November 14, 1978. Applicant: BILLY JACK HOLLINGSWORTH, d.b.a. HOLLINGSWORTH GRAIN & TRUCKING, P.O Box 384, Sanger, TX 76266. Representative: Harry F. Horak, Suite 115, 5001 Brentwood Stair Road, Fort Worth, TX 76112. To operate as a *common carrier,* by motor vehicle, in interstate or foreign commerce, over irregular routes, *animal and poultry feed and animal and poultry feed ingredients,* from points in TX, to points in AR, CO, KS, LA, MS, NM, OK, and TN. (Hearing site: Dallas or Fort Worth, TX)

MC 143540 (Sub-8F), filed November 6, 1978. Applicant: MARINE TRANSPORT COMPANY, a corporation, 2321 Burnette Blvd., Wilmington, NC 28402. Representative: Jean H. Lewis, 9525 Trojan Ct., Richmond, VA 23229. To operate as a *contract carrier,* by motor vehicle, in interstate or foreign commerce, over irregular routes, transporting *dimethyl terephthalate and terephthalic acid,* from the facilities of Hercofina, at or near Wilmington, NC, to the facilities of Goodyear Tire and Rubber Company, at or near Apple Grove, WV, under contract with Hercofina, of Wilmington, NC. (Hearing site: Richmond, VA, or Raleigh, NC)

MC 143550 (Sub-2F), filed November 8, 1978. Applicant: GARY PARISH, d.b.a. G & C FREIGHT SERVICE, 647 S.W. 143, Seattle, WA 98166. Representative: Gary Parish (same address as applicant). To operate as a *common carrier,* by motor vehicle, in interstate or foreign commerce, over irregular routes, transporting *roofing materials,* between points in Pacific, Grays Harbor, Calallam, and Jefferson Counties, WA, and points in Marin, Sonoma, Napa, Solano, Contra Costa, Alameda, Santa Clara, San Mateo, and San Francisco Counties, CA. (Hearing site: Aberdeen, WA)

MC 144122 (Sub-34F), filed December 1, 1978. Applicant: CARRETTA TRUCKING, INC., S. 160 Route 17 North, Paramus, NJ 07652. Representative: Joseph Caretta (same address as applicant). To operate as a *common carrier,* by motor vehicle, in interstate or foreign commerce, over irregular routes, transporting *welding materials, welding equipment, and welding supplies* (except commodities in bulk), from the facilities of Nassau Research, at or near New Brunswick, NJ, to Denver, CO, restricted to the transportation of traffic originating at the named origin and destined to the named destination. (Hearing site: Newark, NJ, or New York, NY)

NOTE.—Dual operations are at issue in this proceeding.

MC 144130 (Sub-4F), filed November 13, 1978. Applicant: RUSSELL GRILLS, d.b.a. GRILLS TRUCKING, 2225 E. 33rd Ave., Vancouver, B.C., Canada. Representative: James T. Johnson, 1610 IBM Bldg., Seattle, WA 98101. To operate as a *contract carrier,* by motor vehicle, in foreign commerce only, over irregular routes,

transporting *foundry materials*, from points in CA, to points on the International Boundary line between the United States and Canada in WA, under contract with Overseas Commodities, Ltd., of Vancouver, Canada. (Hearing site: Seattle, WA)

MC 144140 (Sub-22F), filed November 6, 1978. Applicant: SOUTHERN FREIGHTWAYS, INC., P.O. Box 374, Eustis, FL 32726. Representative: John L. Dickerson (same address as applicant). To operate as a *common carrier*, by motor vehicle, in interstate or foreign commerce, over irregular routes, transporting *foodstuffs* (except in bulk), from the facilities of Knouse Foods, Inc., at Chambersburg, Ortanna, and Peach Glen, PA, to points in AL, FL, GA, LA, MS, SC, TN, and TX. (Hearing site: Harrisburg, PA, or Washington, DC)

NOTE.—Dual operations may be at issue in this proceeding.

MC 144162 (Sub-7F), filed December 14, 1978. Applicant: TIME CONTRACT CARRIERS, INC., 17734 Sierra Hwy, Canyon Country, CA 91351. Representative: Milton W. Flack, 4311 Wilshire Blvd., No. 300, Los Angeles, CA 90010. To operate as a *contract carrier*, by motor vehicle, in interstate or foreign commerce, over irregular routes, transporting *amonium chloride* (except commodities in bulk), from the facilities of Reagent Chemical & Research, Inc., at Middlesex, NJ, to points in CA, IL, MA, NJ, NC, PA, and WI, under contract with Reagent Chemical & Research, Inc., of Middlesex, NJ. (Hearing site: Los Angeles, CA)

MC 144246 (Sub-7f), filed November 13, 1978. Applicant: LARSEN TRUCKING, INC., 7703 Sunset St., Ralston, NE 68127. Representative: Kenneth P. Weiner, 408 Executive Bldg., Omaha, NE 68102. To operate as a *common carrier*, by motor vehicle, in interstate or foreign commerce, over irregular routes, transporting *meats, meat products and meat byproducts, and articles distributed by meat-packing houses*, as described in sections A and C of Appendix I to the report in *Descriptions in Motor Carrier Certificates*, 61 M.C.C. 209 and 766 (except hides and commodities in bulk), from the facilities of B. C. Dressed Beef, Inc., at Omaha, NE, to St. Louis, MO. (Hearing site: Omaha, NE)

MC 144282 (Sub-6F), filed December 15, 1978. Applicant: JAMES RECK, doing business as, JAMES RECK TRUCKING, 4029 West McDowell No. 4, Phoenix, AZ 85009. Representative: Lewis P. Ames, 111 W. Monroe, 10th Floor, Phoenix, AZ 85003. To operate as a *contract carrier*, by motor vehicle, in interstate or foreign commerce, over irregular routes, transporting *iron oxide*, from the facilities of Frank D. Davis Co., at Los Angeles, CA, to points in AZ, under contract with Frank D. Davis Co., of Los Angeles, CA. (Hearing site: Los Angeles, CA, or Phoenix, AZ)

MC 144282 (Sub-7F), filed December 15, 1978. Applicant: JAMES RECK, doing business as, JAMES RECK TRUCKING, 4029 West McDowell No. 4, Phoenix, AZ 85009. Representative: Phil B. Hammond, 111 W. Monroe, 10th Floor, Phoenix, AZ 85003. To operate as a *contract carrier*, by motor vehicle, in interstate or foreign commerce, over irregular routes, transporting *iron oxide*, from Vernon, CA, to points in AZ, under contract with Pfizer Incorporated, of New York, NY. (Hearing site: Los Angeles, CA, or New York, NY)

MC 144522 (Sub-4F), filed December 12, 1978. Applicant: PETERSEN & FOGO, INC., P.O. Box 484, Superior, NE 68978. Representative: Lavern R. Holdeman, 521 South 14th Street, P.O. Box 81849, Lincoln, NE 68501. To operate as a *common carrier*, by motor vehicle, in interstate or foreign commerce, over irregular routes, transporting (1) *materials, equipment, and supplies* used in the manufacture, sale, distribution, and construction of metal grain bins; and (2) *accessories* for the commodities named in (1) above (except commodities in bulk), from points in NE, to the facilities of Superior Equipment Manufacturing Company, a division of Tiffany Industries, at or near Mattoon, IL, restricted to the transportation of traffic originating at the named origins and destined to the named destinations. (Hearing site: Mattoon, IL, or Lincoln, NE)

MC 144622 (Sub-30F), filed December 8, 1978. Applicant: GLENN BROS. TRUCKING, INC., P.O. Box 9343, Little Rock, AR 72219. Representative: Phillip Glenn (same address as applicant). To operate as a *common carrier*, by motor vehicle, in interstate or foreign commerce, over irregular routes, transporting *tile and commodities* used in the distribution and installation of tile (except commodities in bulk, and those which because of size or weight require the use of special equipment), from Chicago, IL, to points in AZ, CA, ID, NV, OR, UT, and WA. (Hearing site: New York, NY)

NOTE.—Dual operations are at issue in this proceeding.

MC 144969 (Sub-5F), filed January 5, 1979. Applicant: WHEATON CARTAGE CO., a corporation, Millville, NJ 08332. Representative: E. Stephen Heisley, 805 McLachlen Bank Bldg., 666 Eleventh St. NW., Washington, DC 20001. To operate as a *common carrier*, by motor vehicle, in interstate or foreign commerce, over irregular routes, transporting (1) *canned and preserved foodstuffs*, and (2) *materials* used in the manufacture of the commodities in (1) above, between Cedarville, Millville, and Bridgeton, NJ, on the one hand, and, on the other, those points in the United States in and east of MN, IA, MO, AR, and LA. (Hearing site: Philadelphia, PA)

NOTE.—Dual operations may be at issue in this proceeding.

MC 145022 (Sub-4F), filed December 8, 1978. Applicant: MARSH BROTHERS TRUCKING SERVICE, INC., 1811 Howell Avenue, Dayton, OH 45407. Representative: Jerry B. Sellman, 50 West Broad Street, Columbus, OH 43215. To operate as a *common carrier*, by motor vehicle, in interstate or foreign commerce, over irregular routes, transporting *coal*, from points in KY, to points in Montgomery County, OH. (Hearing site: Columbus, OH, or Washington, DC)

MC 145093 (Sub-SF), filed December 8, 1978. Applicant: J.C. TRANSPORT CORPORATION, 53 E. Broadway, P.O. Box 142, North Salem, NH 03073. Representative: S.L. Watts, TDS, Inc., 1050 Waltham Street, Lexington, MA 02173. To operate as a contract carrier, by motor vehicle, in interstate or foreign commerce, over irregular routes, transporting (1) *yogurt, cheese and cheese products, and cultured products*, (except commodities in bulk), and (2) *commodities* used in the manufacture and distribution of the commodities named in (1) above, (except commodities in bulk), between points in CT, DE, IN, MA, MD, MI, NH, NJ, NY, OH, PA, RI, and DC, on the one hand, and, on the other, the facilities of Colombo, Inc., at Methuen, MA, and Hagerstown, MD, under contract with Colombo, Inc., of Methuen, MA. (Hearing site: Concord, NH, or Boston, MA)

MC 145152 (Sub-27F), filed December 18, 1978. Applicant: BIG THREE TRANSPORTATION, INC., P.O. Box 706, Springdale, AR 72764. Representative: Don Garrison, 324 North Second Street, Rogers, AR 72756. To operate as a *common carrier*, by motor vehicle, in interstate or foreign commerce, over irregular routes, transporting *such commodities* as are dealt in or used by wholesale and retail discount and variety stores, from points in IL and PA, to the facilities of Wal-Mart Stores, Inc., at or near Bentonville and Searcy, AR. (Hearing site: Tulsa, OK, or Little Rock, AR.)

MC 145679 (Sub-4F), filed January 2, 1979. Applicant: A & A TRANSPORT SERVICES, INC., a Delaware corporation, P.O. Box 12, Palmer, MA 01069. Representative: Arlyn L. Westergren, Suite 106, 7101 Mercy Road, Omaha, NE 68106. To operate as a *common*

*carrier,* by motor vehicle, in interstate or foreign commerce, over irregular routes, transporting *meats, meat products and meat byproducts, and articles distributed by meat-packing houses,* as described in Sections A and C of Appendix I to the report in *Descriptions in Motor Carrier Certificates,* 61 M.C.C. 209 and 766, (except hides and commodities in bulk), from Oakland, IA, to points in CT, DE, ME, MD, MA, NH, NJ, NY, OH, PA, RI, VT, and DC. (Hearing site: Omaha, NE.)

MC 145500 (Sub-1F), filed October 26, 1978. Applicant: EAST TEXAS CARTAGE CO., a corporation, 3300 W. Front Street, Tyler, TX 75711. Representative: Harry F. Horak, Suite 115, 5001 Brentwood Stair Road, Fort Worth, TX 76112. To operate as a *common carrier,* by motor vehicle, in interstate or foreign commerce, over irregular routes, transporting (1) *trailers,* having a prior or subsequent movement by rail in TOFC service, between rail facilities at Tyler, Longview, and Dallas, TX, on the one hand, and, on the other, points in Smith, Rusk, Cherokee, Anderson, Henderson, Van Zandt, Wood, Upshur, Morris, Camp, Titus, Harrison, and Gregg Counties, TX, and (2) *general commodities* (except those of unusual value, classes A and B explosives, household goods as defined by the Commission, commodities in bulk, and those requiring special equipment), having a prior or subsequent movement by air, between the Dallas-Fort Worth Airport, near Dallas, TX, on the one hand, and, on the other, points in Smith, Rusk, Cherokee, Anderson, Henderson, Van Zandt, Wood, Upshur, Morris, Camp, Titus, Harrison, and Gregg Counties, TX. (Hearing site: Dallas or Fort Worth, TX.)

MC 145680F, filed October 26, 1978. Applicant: C & R TRUCKING, LTD., 2955 Packers Avenue, Madison, WI 53704. Representative: Michael J. Wyngaard, 150 E. Gilman Street, Madison, WI 53703. To operate as a *common carrier,* by motor vehicle, in interstate or foreign commerce, over irregular routes, transporting (1) *bakery goods,* from Madison and Milwaukee, WI, to points in IL, IN, IA, MN, ND, SD, and the Upper Peninsula of MI, and (2) *materials, equipment, and supplies used in the manufacture or distrubution of bakery goods,* in the reverse direction, restricted to the transportation of traffic originating at or destined to the facilities of Bagels Forever, Inc., at or near Madison and Milwaukee, WI. (Hearing site: Madison or Milwaukee, WI.)

MC 145732 (Sub-2F), filed November 27, 1978. Applicant: GALEN CHARLES PRITCHARD, d.b.a. PRITCHARD TRUCKING, 8505 Ohern Number 6, Omaha, NE 68127. Representative: Galen Charles Pritchard (same address as applicant). To operate as a *contract carrier,* by motor vehicle, in interstate or foreign commerce, over irregular routes, transporting *meats, meat products and meat byproducts, and articles* distributed by meat-packing houses, as described in sections A and C of Appendix I to the report in *Descriptions in Motor Carrier Certificates,* 61 M.C.C. 209 and 766, (except commodities in bulk, in tank vehicles), between the facilities of H. Shenson Inc. at Omaha, NE, and points in CA, under contract with H. Shenson Inc., of San Francisco, CA. (Hearing Site: Omaha, NE.)

MC 145770F, filed November 9. 1978. Applicant: KEITH JUSTICE, d.b.a. JUSTICE TRUCKING, 128 Hillside Drive, Minden, IA 51553. Representative; Arlyn L. Westergren, Suite 106, 7101 Mercy Road, Omaha, NE 68106, To operate as a *common carrier,* by motor vehicle, in interstate or foreign commerce, over irregular routes, transporting *meats, meat products and meat byproducts, and articles distributed by meat-packing houses,* as described in sections A and C of Appendix I to the report in *Descriptions in Motor Carrier Certificates,* 61 M.C.C. 209 and 766, (except hides and commodities in bulk, in tank vehicles), from the facilities of John Roth & Son, Inc., at Omaha, NE, to points in IL, IN, IA, KS, MI, MO, OH, and WI. (Hearing site: Omaha, NE.)

MC 145771F, filed November 17, 1978. Applicant: KERWIN CARTAGE, INC., Box 1181, Seneca, SC 29678. Representative: Ronald N. Cobert, Suite 501, 1730 M St., NW., Washington, DC 20036. To operate as a *common carrier,* by motor vehicle, in interstate or foreign commerce, over irregular routes, transporting *general commodities* (except articles of unusual value, classes A and B explosives, household goods as defined by the Commission, commodities in bulk, and those requiring special equipment), between points in Anderson, Greenville, Oconee, Pickens, and Spartanburg Counties, SC, restricted to the transportation of traffic to interline services only. (Hearing site: Columbia, SC, or Atlanta, GA.)

MC 145923F, filed December 12, 1978. Applicant: R. S. D. SERVICES, INC., 42 Hawthorne Avenue, Park Ridge, NJ 07656. Representative: Morton E. Kiel, Suite 6193, 5 World Trade Center, New York, Ny 10048. To operate as a *contract carrier,* by motor vehicle, in interstate or foreign commerce, over irregular routes, transporting *refined wood waste,* from Norway, ME, Lowell, MA, Laconia, NH, Lowville, Broadalbin, and Lewis, NY, and Garfield, NJ, to points in MA, RI, NH, CT, NJ, and PA, under contract with Michael Wood Products, Inc., of Garfield, NJ. (Hearing site: New York, NY.)

MC 146012F, filed December 18, 1978. Applicant: C. W. KEITH TRANSFER & WAREHOUSE CO., a corporation, 2100 South 15th Avenue, Phoenix, AZ 85001. Representative: Charles R. Hallam, 1700 United Bank Building, 3550 North Central Avenue, Phoenix, AZ 85012. To operate as a *contract carrier,* by motor vehicle, in interstate or foreign commerce, over irregular routes, transporting *general commodities* (except those of unusual value, classes A and B explosives, household goods as defined by the Commission, commodities in bulk, and those requiring special equipment), between Phoenix and Bagdad, AZ, under contract with Cyprus Mines Corporation, of Bagdad, AZ. (Hearing site: Phoenix, AZ.)

NOTE.—Dual operations are at issue in this proceeding.

MC 529 (Sub-7F), filed December 28, 1978. Applicant: WINFIELD BUS SERVICE, INC., 1421 Olive Street, Winfield, KS 67156. Representative: Eugene W. Hiatt, 207 Casson Building, 603 Topeka Boulevard, Topeka, KS 66603. To operate as a *common carrier,* by motor vehicle, in interstate or foreign commerce, over irregular routes, transporting *passengers and their baggage* in the same vehicle with passengers, in special and charter operations, from points in KS, Kay and Grant Counties, OK, and Jackson and Platte Counties, MO, to points in the United States (including AK, but excluding HI), and return. (Hearing site: Topeka, KS.)

MC 139210 (Sub-5F), filed October 26, 1978. Applicant: ALASKA YUKON MOTORCOACHES, INC., Suite 555, Fourth and Battery Building, Seattle, WA 98121. Representative: A. T. Wendells, 910 Bank of California Center, Seattle, WA 98164. To operate as a *common carrier,* by motor vehicle, in interstate or foreign commerce, transporting *passengers and their baggage,* (A) over regular routes, (1) between Skagway, AK, and the International Boundary line between the United States and Canada at British Columbia, Canada, over unnumbered AK Hwy, and return over the same route, serving all intermediate points, (2) between Tok, AK, and Delta Junction, AK, over AK Hwy 2, and return over the same route, serving no intermediate points, (3) between Fairbanks, AK, and junction AK Hwys 1 and 3, over AK Hwy 3, and return over the same route, serving all intermediate points and the off-route points of Petersville and Talkeetna, AK, and (4) between Anchorage, AK, and Valdez, AK, over AK Hwy 1, and return over the same route, serving the intermediate points

of Portage and Whittier, AK, and the off-route points of Gerdwood, Alyeska, and Portage Glacier, AK, and (B) over irregular routes, in charter operations, beginning and ending at points in AK, and extending to points in the United States (except HI). (Hearing site: Seattle, WA.)

[FR Doc. 79-4845 Filed 2-14-79; 8:45 am]

---

[7035-01-M]

[Finance Docket No. 28905 (Sub-No. 1F) [1]]

**CSX CORP.—CONTROL—CHESSIE SYSTEM, INC., AND SEABOARD COAST LINE INDUSTRIES, INC.**

CSX CORPORATION (CSX), 11th Floor, 707 East Main Street, Richmond, VA 23212, CHESSIE SYSTEM, INC. (CSI), 2 North Charles Street, Baltimore, MD 21201, and SEABOARD COAST LINE INDUSTRIES, INC. (SCLI), 3600 West Broad Street, Richmond, VA 23230, on January 18, 1979, filed with the Interstate Commerce Commission at Washington, DC, a joint application under 49 U.S.C. § 11343 (formerly Section 5(2) of the Interstate Commerce Act) for authority for CSX to acquire control of the rail carriers subsidiary to CSI and SCLI by CSX engaging in a merger with CSI and SCLI.

The rail carrier subsidiaries of CSI and SCLI have also joined as applicants, as required by the Commission's regulations governing such transactions. The rail carriers subsidiary to CSI are as follows: THE CHESAPEAKE AND OHIO RAILWAY COMPANY (C&O), Terminal Tower, Cleveland, OH 44101; THE BALTIMORE AND OHIO RAILROAD COMPANY (B&O), and WESTERN MARYLAND RAILWAY COMPANY (WM), both of 2 North Charles Street, Baltimore, MD 21201; THE BALTIMORE AND OHIO CHICAGO TERMINAL RAILROAD COMPANY (B&OCT), 230 W. Monroe Street, Chicago, IL 60606; THE STATEN ISLAND RAILROAD CORPORATION (SIRC), Tompkinsville, Staten Island, NY; and CHICAGO SOUTH SHORE AND SOUTH BEND RAILROAD (CSS & SB), Carroll Avenue, Michigan City, IN 46360. The rail carriers subsidiary to SCLI are as follows: SEABOARD COAST LINE RAILROAD COMPANY (SCL) and GAINESVILLE MIDLAND RAILROAD COMPANY (GM), both of 3600 West Broad Street, Richmond, VA 23230; LOUISVILLE AND NASHVILLE RAILROAD COMPANY (L&N), and THE CARROLLTON RAILROAD (CARR), both of 908 West Broadway, Louisville, KY 40202; CLINCHFIELD RAILROAD COMPANY (CLINCHFIELD), COLUMBIA NEWBERRY AND LAURENS RAILROAD (CN&L), and DURHAM AND SOUTHERN RAILWAY COMPANY (D&S), all of 500 Water Street, Jacksonville, FL 32202; and GEORGIA RAILROAD (GEORGIA), THE WESTERN RAILWAY OF ALABAMA (W of A), and ATLANTA AND WEST POINT RAILROAD COMPANY (A&WP) all of 1590 Marietta Blvd., Atlanta, GA 30318. RICHMOND FREDERICKSBURG & POTOMAC RAILROAD (RF&P), 2134 West Laburnum Avenue, P.O. Box 11281, Richmond, VA 23230, also joins as an applicant. RF&P is controlled by Richmond-Washington Company, a noncarrier, which owns 65.9 percent of the voting capital stock of FR&P. CSI and SCLI each control 40 percent of the common stock of Richmond-Washington Company, and upon the proposed merger of CSI and SCLI into CSX, CSX would control 80 percent of the common stock of Richmond-Washington Company, thereby giving CSX control over RF&P.

CSX also filed an application on January 18, 1979, under 49 U.S.C. § 11301 (formerly Section 20a(1)-(10) of the Interstate Commerce Act) for authority to issue securites and to assume obligation and liability in respect of securities of CSI and SCLI, together with a motion to dismiss the application. The securities issuance and assumption of liability proceeding has been assigned Finance Docket No. 28905 (Sub-No. 2F). In addition, as a result of the proposed transaction, CSX would acquire control of Seacoast Transportation Company (STC), a wholly-owned motor carrier subsidiary of SCL. An application under 49 U.S.C. § 11343 for CSX to acquire control of STC was filed simultaneously with Finance Docket No. 28905 (Sub-No. 1F), and has been assigned docket No. MC-F-13891F; notice is published separately in this edition of the FEDERAL REGISTER.

The applications and exhibits are available for inspection in the Public Docket Room at the offices of the Interstate Commerce Commission in Washington, DC.

The attorney representing CSX, CSI and its rail carrier subsidiaries, and RF&P is Roland W. Donnem, Senior Vice-President-Law, Chessie System, Inc., P.O. Box 6419, Cleveland, OH 44101. The attorney representing CSX, SCLI and its rail subsidiaries, and RF&P is Richard A. Hollander, General Counsel, Seaboard Coast Line, P.O. Box 27581, Richmond, VA 23261.

Under the proposed transaction, the rail carriers will not be merged, although certain operating efficiencies among the carriers are proposed. Also, as a result of the proposed transaction the carriers will continue to operate in the states and over the lines described below, subject to certain proposed abandonments, trackage rights and coordinated operations described in the application.

The CSI carriers operate in the states of IL, IN, OH, MI, MO, MD, PA, NJ, NY, DE, VA, WV, WI, KY, DC, and the Providence of Ontario. Principal lines of the C&O extend from the coal fields of southern West Virginia, eastern Kentucky and southern Ohio eastward to Newport News, VA, and Washington, DC, westward to Louisville, KY, Cincinnati, OH, and Chicago, IL, and northward through Columbus and Toledo, OH, to Detroit, MI. Another principal line of the C&O extends from Chicago, IL, eastward through Grand Rapids and Detroit, MI, to Buffalo, NY. Principal lines of the B&O extend from Philadelphia, PA, through Baltimore, MD, and Washington, DC, to Cumberland, MD, and from Cumberland, MD, by separate routes to Chicago, IL, and St. Louis, MO. Another principal line extends from Cincinnati to Toledo, OH. Principal lines of WM extends from Baltimore, MD, northwestward to Connellsville, PA, and southwestward into West Virginia. WM also has a line extending from Hagerstown, MD, to Shippensburg, PA. CSS&SB operates an interurban electric railroad from Chicago, IL, to South Bend, IN. Principal lines of B&OCT extend from Pine Junction, IN, to South Chicago, IL, and from Pine Junction, IN, to Bensonville, IL, and thence to Grand Central Station and Forest Park, IL. The principal line of SIRC extends from Cranford Junction, NJ, to Tottenville, Staten Island, NY.

The SCLI carriers operate in the states of KY, TN, AL, FL, MS, GA, LA, NC, SC, VA, IL, IN, MO and OH. Principal lines of SCL extend from Richmond, VA, to Jacksonville, Orlando, Tampa and Miami, FL, via Rocky Mount, NC, Florence and Charleston, SC, and Savannah and Waycross, GA, and from Richmond, VA, to Atlanta, GA, and Birmingham, AL, via Petersburg, VA, Raleigh and Hamlet, NC, and Greenwood, SC. Principal lines also connect Atlanta, GA, and Birmingham, AL, with Florida points via Thomasville and Waycross, GA. Principal lines of L&N extend from Cincinnati, OH, through Louisville, KY, Nashville, TN, Birmingham, Montgomery, and Mobile, AL, to New Orleans, LA. Principal L&N lines also extend from Chicago, IL, to Atlanta, GA, via Evansville, IN, Nashville and Chattanooga, TN, and Cartersville,

[1] This proceeding embraces Finance Docket No. 28905 (Sub-No. 2F), CSX Corporation, Securities, and No. MC-F-13891F, CSX Corporation -Control-Seacoast Transportation Company.

GA. The principal line of the Clinchfield extends from Elkhorn City, KY, to Spartanburg, SC, via Dante and St. Paul, VA, Kingsport, Johnson City and Erwin, TN. The principal line of Georgia extends from Atlanta to Augusta, GA, and from Camak to Macon, GA. The principal line of A&WP is between Atlanta and West Point, GA. The principal line of W of A is between West Point, GA, and Selma, AL. The principal line of CN&L is between Columbia and Laurens, SC. The principal line of GM is between Fowler Junction and Gainesville, GA. The principal line of D&S is between East Durham and Dunn, NC. The principal line of Carrollton is between Ghent and Worthville, KY. The RF&P operates in the state of Virginia. The principal line of RF&P extends from Richmond to Arlington, VA.

All applications filed under 49 U.S.C. § 11343 must meet the requirements of the Commission's *Railroad Acquisition, Control, Merger, Consolidation Project, Trackage Rights and Lease Procedures,* 49 CFR Part 1111. This includes inconsistent applications, petitions for inclusion, and trackage rights applications. Any deviation from such requirements must be preceded by a petition for waiver filed prior to the filing of the application. See *Burlington Northern, Inc.-Control-& Merger-St. L.,* 354 I.C.C. 182, 183 (1977).

Pursuant to 49 U.S.C. § 11345(d) (formerly Section 5(2)(g) of the Act), the Commission must conclude all evidentiary proceedings by the end of the 24th month after the notice of the application is published in the FEDERAL REGISTER (February 15, 1981). Dates for the filing of various documents in this proceeding will be adhered to strictly.

Any person interested in filing an inconsistent application or petition for inclusion should file a notice of intent to do so no later than april 2, 1979 (45 days after the date notice of the application is published in the FEDERAL REGISTER). Original and five copies shall be filed with the Secretary, Interstate Commerce Commission, Washington, DC 20423. Any traffic studies and data submitted shall relate to the calendar year January 1, 1977, through December 31, 1977. A person filing traffic studies as part of an inconsistent application should study not only its own traffic, but also that of the applicants, where it reasonably can be expected that this traffic would be diverted if the inconsistent application was granted. Inconsistent applications and petitions for inclusion must be filed with the Commission by May 16, 1979.

Any person, including any who proposes to file an inconsistent application or petition for inclusion, who seeks discoverable information from applicants should prepare a list of the information not otherwise available that will be necessary. This includes information necessary to complete an inconsistent application or petition for inclusion in accordance with 49 CFR Sections 1111.4(b)(4) or 1111.4(b)(5), and other discoverable information that may be sought. Applicants shall keep all appropriate underlying work papers available to the parties at the offices of CSI and SCLI in Baltimore, MD, and Richmond, VA, respectively. The list should be submitted to CSI and SCLI by March 19, 1979. CSI and SCLI are directed to respond to those persons by April 3, 1979, specifically stating what information will be supplied voluntarily and what information will not be supplied, with reasons. Fifteen copies of the lists of requested information and the responses should be filed with the Commission when served.

Any protestants who propose to file traffic studies as evidence in opposition to this application shall use studies that relate to the calendar year January 1, 1977, through December 31, 1977.

Any person seeking protective conditions shall file with the Commission, and serve on applicants and all other parties on or before april 2, 1979, an initial list of specific protective conditions. A final list of protective conditions shall be filed on or before May 1, 1979.

Any person who proposes to file a trackage rights application shall do so on or before May 21, 1979. All trackage rights applications must be filed by that date to be considered in these proceedings. The Commission will presume that any such trackage rights application is a major market extension. Petitions to rebut this presumption must be filed on or before april 23, 1979.

April 16, 1979, is hereby designated as the date on or before which applicants shall file with the Secretary of the Commission and on the administrative law judge and on all parties the verified statements of all their witnesses. Applicants shall submit an original and 10 copies of each verified statement to the Commission.

On April 24, 1979, an initial prehearing conference will be held at the offices of the Interstate Commerce Commission in Washington, DC, commencing at 9:30 a.m. Presiding at the conference will be Administrative Law Judge Steven M. Charno, who has been designated to conduct the proceedings. Parties should include in their comments any issues they wish to be discussed at the pre-hearing conference. Discovery and related matters should be concluded prior to the prehearing conference to permit rulings at that time by the administrative law judge.

All parties should serve on the administrative law judge directly a copy of any and all pleadings, documents, and any other information that they are otherwise required to file with the Commission during the course of these proceedings.

Any interlocutory appeals from rulings by the administrative law judge will be considered by division 1 of the Commission. Such appeals shall be filed within 5 days of the date on which the ruling is made, and shall also be served on the administrative law judge.

By statute, the evidentiary phase of the proceedings must be concluded by February 15, 1981. The initial decision will be waived, and the determination of the merits of the applications will be made by the entire Commission, pursuant to 49 U.S.C. § 11345(e) (formerly Section 5(2)(g) of the Act). The Commission must issue a decision in these proceedings by August 14, 1981.

Interested persons may participate formally in a proceeding by submitting written comments regarding the applications. Such submissions shall indicate the proceeding designation (Finance Docket No. 28905 (Sub-No. 1F)) and the original and two copies thereof shall be filed with the Secretary, Interstate Commerce Commission, Washington, DC 20423, not later than 45 days after the date notice of the filing of the applications is published in the FEDERAL REGISTER. Such written comments shall include the following: the person's position, e.g., party protestant or party in support, regarding the proposed transaction; specific reasons why approval would or would not be in the public interest; and a request for oral hearing if one is desired. Additionally, interested persons who do not intend to participate formally in a proceeding but who desire to comment thereon may file such statements and information as they may desire, subject to the filing and service requirements specified herein. Persons submitting written comments to the Commission shall, at the same time, serve copies of such written comments upon the applicants, the Secretary of Transportation and the Attorney General.

Dated: February 9, 1979

By the Commission. Chairman O'Neal, Vice Chairman Brown, Commissioners Stafford, Gresham, Clapp and Christian. Vice Chairman Brown absent and not participating.

H. G. HOMME, Jr.,
*Secretary.*

[FR Doc. 79-4992 Filed 2-14-79; 8:45 am]

[7035-01-M]

[No. MC-F-13891F]

CSX CORP.—CONTROL—SEACOAST TRANSPORTATION CO.

No. MC-F-13891F Application for authority under 49 U.S.C. 11343 by CSX Corporation (CSX), 707 East Main Street, Richmond, VA 23212, to acquire control of SEACOAST TRANSPORTATION COMPANY (STC), 500 Water Street, Jacksonville, FL 32202, filed with the Interstate Commerce Commission on January 18, 1979. CSX is presently owned and controlled by CHESSIE SYSTEM, INC. (CSI), 2 North Charles Street, Baltimore, MD 21201, and SEABOARD COAST LINE INDUSTRIES, INC. (SCLI), 3600 West Broad Street, Richmond, VA 23230, and would acquire control of STC through the acquisition by CSX of the stock of CSI and SCLI, and merger of CSI and SCLI into CSX, and consequent control of SEABOARD COAST LINE RAILROAD COMPANY (SCL), 500 Water Street, Jacksonville, FL 32202, which, in turn, owns and controls STC. Applicants' attorneys are: R. W. Donnem, Esquire, Sr. Vice President-Law, Chessie System, Inc., P.O. Box 6419, Cleveland, OH 44101, and Richard A. Hollander, Esquire, General Counsel, Seaboard Coast Line Railroad Company, 3600 West Broad Street, Richmond, VA 23230. Operating rights sought to be controlled: General commodities, except those of unusual value, Classes A and B explosives, household goods as defined by the Commission, commodities in bulk, commodities requiring special equipment, and those injurious or contaminating to other lading, restricted to service which is auxiliary to, or supplemental of, rail carrier service of SCL as a common carrier over regular routes between and through the states of VA, NC, SC, GA, FL, and AL. Application has not been filed for temporary authority under 49 U.S.C. 11349. This application is directly related to the consolidation and securities issuance applications filed by CSX, CSI, SCLI and the rail carrier subsidiaries of CSI and SCLI, pursuant to 49 U.S.C. 11343 and 11301. Notice of these applications is published separately in this edition of the FEDERAL REGISTER under Finance Docket No. 28905 (Sub-Nos. 1F and 2F). The time limits established for Finance Docket No. 28905 (Sub-Nos. 1F and 2F) will be applied to this motor carrier application, and the cases will be considered together.

Dated: February 9, 1979.

By the Commission. Chairman O'Neal, Vice Chairman Brown, Commissioners Stafford, Gresham, Clapp and Christian. Vice Chairman Brown absent and not participating.

H. G. HOMME, Jr.,
*Secretary.*

[FR Doc. 79-4991 Filed 2-14-79; 8:45 am]

---

[7035-01-M]

FOURTH SECTION APPLICATION FOR RELIEF

FEBRUARY 12, 1979.

This application for long-and-short-haul relief has been filed with the I.C.C.

Protests are due at the I.C.C. within 5 days from the date of publication of this notice. FSA NO. 43663, ABC Container Line N.V.'s No. 3, intermodal rates on commodities in containers from rail carriers' terminals on the U.S. Gulf Coast, by way of Jacksonville, FL, Savannah, GA and Charleston, SC, to ports in Continental Europe, Ireland, Scandinavia, and the United Kingdom, in its Tariff No. 1, I.C.C. No. 2, effective February 24, 1979. Grounds for relief—All-water competition.

H. G. HOMME, Jr.,
*Secretary.*

[FR Doc. 79-4986 Filed 2-14-79; 8:45 am]

---

[7035-01-M]

FOURTH SECTION APPLICATIONS FOR RELIEF

FEBRUARY 12, 1979.

These applications for long-and-short haul relief have been filed with the ICC.

Protests are due at the ICC within 15 days from the date of publication of this notice.

FSA No. 43662, Southwestern Freight Bureau, Agent's No. B-801, rates on soapstone, from stations in Southwestern Territory, to stations in Illinois-Wisconsin Territory, in Supp. 223 to its Tariff SWFB 2006-J, ICC SWFB 2006-J, to become effective March 11, 1979. Grounds for relief—market competition, modified short-line distance formula and grouping.

FSA No. 43664, Trans-Continental Freight Bureau, Agent's No. 532, requests authority for reduced rates on wheat from Colorado, Kansas, Nebraska and Wyoming points on the Union Pacific to Pacific Coast Ports for export. Grounds for relief—Motor/Rail and market competition.

FSA No. 43665, Southwestern Freight Bureau, Agent No. B-802, rates on chemicals and related articles from Taft, La., Brownsville, North Seadrift, and Texas City, Tex. to Carteret and South Bound Brook, N.J. in Supp. 18 to its Tariff 12-L, ICC 5334, to become effective February 18, 1979. Grounds for relief—market competition.

H. G. HOMME, Jr.,
*Secretary.*

[FR Doc. 79-4987 Filed 2-14-79; 8:45 am]

---

[7035-01-M]

[Notice No. 158]

MOTOR CARRIER BOARD TRANSFER PROCEEDINGS

The following publications include motor carrier, water carrier, broker, and freight forwarder transfer applications filed under Section 212(b), 206(a), 211, 312(b), and 410(g) of the Interstate Commerce Act.

Each application (except as otherwise specifically noted) contains a statement by applicants that there will be no significant effect on the quality of the human environment resulting from approval of the application.

Protests against approval of the application, which may include request for oral hearing, must be filed with the Commission within 30-days after the date of this publication. Failure seasonably to file a protest will be construed as a waiver of opposition and participation in the proceeding. A protest must be served upon applicant's representative(s), or applicants (if no such representative is named), and the protestant must certify that such service has been made.

Unless otherwise specified, the signed original and six copies of the protest shall be filed with the Commission. All protests must specify with particularly the Federal basis, and the section of the Act, or the applicable rule governing the proposed transfer which protestant believes would preclude approval of the application. If the protest contains a request for oral hearing, the request shall be supported by an explanation as to why the evidence sought to be presented cannot reasonably be submitted through the use of affidavits.

The operating rights set forth below are in synoposes form, but are deemed sufficient to place interested persons on notice of the proposed transfer.

MC-FC-77858, filed September 13, 1978. Transferee: MONROE TRANSPORT, INC., Union, Monroe County, WV 24983. Transferor: JULIAN M. SHRADER, Pickway, Monroe County, WV. Representative: JAMES M. SPROUSE, Suite 223 Morrison Bldg., 815 Quarrier Street, Charleston, WV 25301. Authority sought for purchase by transferee of the operating rights of transferor set forth in Certificate No. MC-116229, issued June 23, 1957 as follows: Fertilizer, from Lynchburg, VA to points in WV in and south of Cabell, Putnam, Kanawha, Clay, Ni-

cholas, Greenbrier, and Pocahontas Counties, WV; and rough lumber, from Bluefield and Ronceverte, WV and points within ten miles of each, to points in those portions of VA and NC on and west of US Hwy 27. Transferee presently holds no authority from this Commission. Application for Section 210a(b) authority was granted on October 16, 1978.

MC-FC-77885, filed October 10, 1978. Transferee: GULF MID-WESTERN, INC., 12151 W. 44th Ave., Denver, Co. 80033. Transferor: HUNT TRANSPORTATION, INC., 10770 "I" St., Omaha, NE 66106. Representative: MARSHALL D. BECKER, Attorney, Suite 610, 7171 Mercy Rd., Omaha, NE 66106. Authority sought for purchase by transferee of the operating rights of transferor, as set forth in Certificate No. MC-82841 (SUB No. 66) and (SUB No. 83), issued January 24, 1972 and July 5, 1972 respectively, as follows: *Wood pulp, paper and paper products* from the plantsites of Southland Paper Mills, Inc., at Herty and Sheldon, TX to points in CO, IL, IA, KS, MN, NE, NM, SD, UT, WI, and WY. *Charcoal briquettes,* in bags, from points in Baxter City, AR to points in the United States (except HI and AK and Memphis, TN; Kansas City, St. Louis and Springfield, MO; Little Rock, AR); and *materials and supplies* on return. Transferee presently holds no authority from this Commission. Application has not been filed for temporary authority under Section 210a(b).

MC-FC-77910, filed November 7, 1968 (correction). Transferee: PEBBLE HAULERS, INC., 2630 Delta Drive, Colorado Springs, CO 80910. Transferor: DALBY TRANSFER AND STORAGE, INC., 641 Winters Drive, Colorado Springs, CO 80933. Representative: Raymond M. Kelley, Esq., 450 Capitol Life Center, Denver, CO 80203. Authority sought for purchase by transferee of a portion of the operating rights of transferor as set forth in Certificate No. MC-115860 Sub 6, issued January 16, 1976, and all of the authority set forth in Certificate No. MC-115860 Sub 11, issued October 4, 1977, as follows: Limestone and limestone products (except cement), from points in El Paso and Teller Counties, CO to points in Arizona, Kansas, Nebraska, New Mexico, Oklahoma, Texas, Utah, and Wyoming, with no transportation for compensation on return except as otherwise authorized; and Limestone and limestone products (except cement), from points in Chaffee, Fremont, and Pueblo Counties, CO to points in AZ, KS, NE, NM, OK, TX, UT, and WY, with no transportation for compensation on return except as otherwise authorized. Transferee presently holds no authority from this Commission. Application has been filed for temporary authority under section 210a(b).

MC-FC-77941. Transferee: IRISH TRANSPORT, INC., P.O. Box 741, Dublin, GA 21021. Transferor: LUMBER TRANSPORT, INC., P.O. Box 111, Cochran, GA 31014. Representative: Virgil H. Smith, Attorney, Suite 12, 1587 Phoenix Blvd., Atlanta, GA 30349. Authority sought for purchase by transferee of the operating rights of transferor, as set forth in Certificate No. MC-115496 (Sub 54) issued August 24, 1978, as follows: *Malt beverages,* from the facilities of Pabst Brewing Co., located in Houston County, GA to points in FL, NC, SC, LA, TX, TN, KY, IL, IN, OH, WI, and MN, and *returned shipments of malt beverages* on return. Transferee presently holds no authority from this Commission. Application has not been filed for temporary authority under Section 210a(b).

MC-FC-77945, filed December 6, 1978. Transferee: SUTTER MOVING AND STORAGE COMPANY, INC., 4503 E. Railroad Avenue, Sacramento, CA 95826. Transferor: BEAR VAN LINES, JEROME E. ROBERTSON, TRUSTEE IN BANKRUPTCY, 755 Redwood Ave., Sand City, CA 93955. Mailing P.O. Box 716, Seaside, CA 93955. Representative: Floyd L. Farano, Attorney at Law, 2555 East Chapman Ave., Suite 705, Fullerton, CA 92631. Authority sought for purchase by transferee of the operating rights of transferor as set forth in Certificate No. MC 126791 Sub 5 issued April 21, 1977, as follows: Used household goods, between points in Santa Cruz, San Benito, Monterey, San Luis Obispo, Santa Barbara, Napa, Alameda, Sonoma, Contra Costa, San Francisco, Marin, Solano, Santa Clara, San Mateo, Stanislaus, Yolo, San Joaquin, Sacramento, Ventura, Los Angeles, Orange, San Bernardino, Riverside, and San Diego Counties, CA, on the one hand, and, on the other, points in California. RESTRICTION: The operations authorized herein are restricted (1) to the transportation having a prior or subsequent movement beyond said points, in containers, and (2) restricted to the performance of pickup and delivery service in connection with packing, crating, and containerization or unpacking, uncrating, or decontainerization of such traffic. The authority granted herein to the extent that it duplicates any authority heretofore granted to or now held by carrier shall not be construed as conferring more than one operating right. Transferee presently holds no authority from this Commission. Applicant has filed for temporary authority under Section 210a(b).

MC-FC-77948, filed December 11, 1978. Transferee: JOE COSTA, d.b.a. TRINIDAD FREIGHT SERVICE, Santa Fe Yards, Trinidad, CO 81082. Transferor: HARVEY L. CAUGHEY, d.b.a. COY CARTAGE AND STORAGE, 1113 S. Williams, Amarillo, TX 79102. Representative: James E. Snead, Attorney for transferee, 215 Lincoln Avenue, Santa Fe, NM 87501. Authority sought for purchase by transferee of the operating rights of transferor as set forth in Certificate No. MC 142859 Sub 1 issued March 10, 1978, as follows: General commodities, except those of unusual value, classes A and B explosives, household goods as defined by the Commission, commodities in bulk, and those because of size or weight require the use of special equipment, over regular routes, between Amarillo, TX and Clayton, NM, serving the intermediate point of Texline, TX: From Amarillo over U.S. Highway 87, to Clayton, and return over the same route. Transferee holds authority from this Commission in No. MC 136183 Subs 1, 2, and 3. Application has not been filed for temporary authority under Section 210a(b).

MC-FC-77952, filed December 4, 1978. Transferee: GEORGE HANNEL, INC., R. R. #3, Box 663, Corydon, IN 47112. Transferor: RIVER CARTAGE CO., INC., P.O. Box 215, National Stockyards, IL 62701. Representative: William Davis, Attorney at Law, 102 N. Capital Ave., Corydon, IN 47112. Authority sought for purchase by transferee of the operating rights of transferor as set forth in Certificate No. MC 7099 issued December 6, 1973, as follows: General commodities, except those of unusual value, classes A and B explosives, household goods as defined by the Commission, commodities in bulk, and commodities requiring special equipment, between points in the St. Louis, MO-East St. Louis, IL Commercial Zone, as defined by the Commission in 1 M.C.C. 656. Transferee presently holds no authority from this Commission. Application has not been filed for temporary authority under Section 210a(b).

MC-FC-77968, filed December 20, 1978. Transferee: RUDOLPH LaBRANCHE, INC., 394 N. Main St., West Franklin, NH 03235. Transferor: RUDOLPH LaBRANCHE, 394 N. Main St., West Franklin, NH 03235. Representative: J. G. Dail, Jr., Attorney, P.O. Box LL, McLean, VA 22101. Authority sought for purchase of the operating rights of transferor as set forth in Permits Nos. MC 119955 Subs 1 and 2, and Corrected Permit No. MC 119955 Sub 5, issued May 4, 1961, January 16, 1969, and September 19, 1977, as follows: Valves, valve components, tools, jigs and fixtures used in manufacturing valves, rough castings and

machine parts, and correspondence, orders, payroll records and blueprints, in interplant messenger service, between Franklin, NH, and Lawrence, MA, and between Kittery, ME, on the one hand, and, on the other, Lawrence, MA, and Franklin, NH, under contract with Webster Valve Company; and (a) between Saddlebrook, NJ, Detroit and Livonia, MI, Chicago, IL, and Kinsman, OH, and (b) between Lawrence, MA, and Franklin, NH, on the one hand, and, on the other, the points named in (a) above and ports of entry on the International Boundary line between the United States and Canada located in Michigan, New Hampshire, New York, and Vermont; and also casting sand, from Aurora, IL, to Kinsman, OH, under contract with Watts Regulator Company. Transferee presently holds no authority from this Commission. Application has not been filed for temporary authority under Section 210a(b).

MC-FC-77971, filed December 20, 1978. Transferee: TORONTO TRUCKING, INC., 407 Daniels St., Toronto, OH 43964. Transferor: BARBER TRUCKING, INC., 407 Daniels St., Toronto, OH 43964. Representative: James R. Stiverson, Attorney at Law, 1396 West Fifth Ave., Columbus, OH 43212. Authority sought for purchase by transferee of the operating rights of transferor as set forth in Certificates Nos. MC 108058 and MC 108058 Sub Nos. 5 and 7, issued April 2, 1956, August 13, 1957, and April 5, 1962, respectively, as follows: Paper and paper products, from Toronto and Steubenville, OH, to points in Allegheny, Washington, Beaver, Butler, Mercer, and Lawrence Counties, PA, and those in Westmoreland County, PA, on and west of U.S. Highway 119, and points in Hancock, Brooke, Ohio and Marshall Counties, WV; from Minerva, OH, to points in Pennsylvania and West Virginia; from Toronto, OH, to points in that part of Ohio on and south of U.S. Highway 22, Paper, cores, plugs, and skids, from points in Allegheny, Washington, Beaver, Butler, Mercer and Lawrence Counties, PA, and those in Westmoreland County, PA, on and west of U.S. Highway 119, and points in Hancock, Brooke, Ohio, and Marshall Counties, WV, to Toronto and Steubenville, OH; from points in Pennsylvania and West Virginia to Minerva, OH; Scrap paper, skids, plugs, cores, cones, and pallets used in the manufacture or distribution of paper and paper products, from points in that part of Ohio on and south of U.S. Highway 22, to Toronto, OH; Paperboard, from Toronto, OH, to Johnstown and Lancaster, PA; Clarksburg, Dunbar, Huntington, Parkersburg and Moundsville, WV, points in Kentucky within the Cincinnati, OH, Commercial Zone, as defined by the Commission, and those in the Detroit, MI, Commercial Zone, as defined by the Commission; and Scrap paper, paper cones, paper plugs, used skids and pallets, and defective or damaged shipments of paperboard, from the designated destination points and areas specified immediately above, to Toronto, OH; Chemicals used in the manufacture of paper, from Pittsburgh, PA, to Toronto, OH; and Empty carboys, from Toronto, OH, to Pittsburgh, PA. MC 108058 Sub 5: Paperboard, from Toronto, OH, to Buffalo, NY, Chicago, IL, points in Indiana, and points in Pennsylvania (except points in Westmoreland County on and west of U.S. Highway 119, those in Allegheny, Beaver, Butler, Lawrence, Mercer, and Washington Counties, and Johnstown and Lancaster); and Paper cores, paper plugs, skids, and pallets, from the above specified destination points to Toronto, OH. MC 108058 Sub 7: Paperboard, from Toronto, OH, to points in Illinois (except Chicago), Kentucky, Missouri, and Wisconsin; and Defective or damaged paperboard, from points in Illinois (except Chicago), Kentucky, Missouri, and Wisconsin, to Toronto, OH. Transferee presently holds no authority from this Commission. Application has not been filed for temporary authority under Section 210a(b).

MC-FC-77976, filed December 22, 1978. Transferee: J. C. TRUCKING, INC., 5226 Brighton Boulevard, Denver, CO 80216. Transferor: JAMES E. CHELF, WILLIAM F. SHARP, JR., ALVIN C. ELLIOTT AND LOY GENE COKER d.b.a. JIM CHELF AND ASSOCIATES, Denver, CO 80216. Representative: Leslie R. Kehl, Jones, Meiklejohn, Kehl & Lyons, 1660 Lincoln Street, Suite 1600, Denver, CO 80264. Authority sought for transfer to transferee of the operating rights of transferor as set forth in Permits Nos. MC-136087, and Subs-Nos. 1, 2, and 6, issued October 11, 1973, May 29, 1973, July 1, 1977, and July 24, 1978, respectively, as follows: Telephone and telegraph construction equipment, materials, and supplies between points in CO on the one hand, and, on the other, points in ID, MT, UT, WY, NM, and AZ; limestone and limestone products from points in Larimer County, CO to points in WY, NE, and NM; telephone and telegraph equipment, materials, and supplies from Omaha, NE to points in CO; reels from points in CO to Omaha, NE; and construction equipment between named points in CO, WY, and KS on the one hand, and, on the other, points in CO, SD, and WY. Transferee presently holds no authority from this Commission. Application for temporary authority under Section 210a(b) has not been filed.

MC-FC-77979, filed December 26, 1978. Transferee: MARTIN C. HOFFMAN AND KENNETH R. HOFFMAN, a Partnership, d.b.a. HOFFMAN TRUCKING, Route #2, Spencer, NE 68777. Transferor: TOMMIE BOSKA, d.b.a. BOSKA TRUCKING, Spencer, NE 68777. Representative: Martin C. Hoffman, Route 32, Spencer, NE 68777. Authority sought for purchase by transferee of the operating rights of transferor as set forth in Certificate No. MC 4180 issued November 20, 1972, as follows: Livestock, between Naper, NE and points within 15 miles of Naper, on the one hand, and, on the other, Sioux City, IA; Feed, tankage, salt, twine, and agricultural implements, from Sioux City, IA to Naper and Jamison, NE. Transferee presently holds no authority from this Commission. Application has been filed for temporary authority under Section 210a(b).

MC-FC-77986, filed January 2, 1979. Transferee: RANDY ERICKSON, R.R. #1, Luck, WI 54853. Transferor: DONALD M. DAVIDSON, d.b.a. DON DAVIDSON, R.R. #1, Luck, WI 54853. Representative: James E. Ballenthin, 630 Osborn Building, St. Paul, MN 55102. Authority sought for purchase by transferee of the operating rights of transferor as set forth in Certificate MC-36697 issued December 8, 1961, as follows: Agricultural commodities and livestock from named points in Wisconsin to South St. Paul and Minneapolis, MN; and general commodities, with exceptions, from South St. Paul and Minneapolis, MN to named points in WI. Transferee presently holds no authority from this Commission. Temporary authority under Section 210a(b) was granted January 23, 1979.

MC-FC-77987, filed January 2, 1978. Transferee: GOODMAN COMPANY, INC., 109 Wayne St., P.O. Box 195, Glasgow, KY 42141. Transferor: MOTLEY TRANSFER, INC., Route 7, Box 206, Glasgow, KY 42141. Representatives: Louis J. Amato, Attorney, P.O. Box E, Bowling Green, KY 42101. Henry H. Dickinson, Attorney, 118 E. Public Sq., Glasgow, KY 42101. Authority sought for purchase by Transferee of the operating rights of transferor as set forth in Certificates No. MC 128771 Sub 1, MC 128771 Sub 2 and MC 128771 Sub 3, issued August 13, 1970, May 3, 1971, and June 13, 1973, respectively, as follows: General commodities, except those of unusual value, classes A and B explosives, household goods as defined by the Commission, commodities in bulk, and those requiring special equipment, between Glasgow, KY, on the one hand, and, on the other, points in Allen, Monroe, and Barren counties, KY. General commodities with the usual exceptions as specified above, between

Glasgow, KY, on the one hand, and, on the other, points in Taylor, Green, and Edmonson Counties, KY. General commodities (with the usual exceptions as specified above) between Glasgow, KY, on the one hand, and, on the other, points in Adair and Hardin Counties, KY. Restricted under the three commodity descriptions to the transportation of traffic having an immediately prior or subsequent movement by rail. Under the third commodity description the operations are also restricted against joinder by carrier with any other authority held by it for the purpose of performing a through service. Transferee presently holds no authority from this Commission. Application has been filed for temporary authority under Section 210a(b).

NC-FC-77990, filed January 4, 1979. Transferee: BURT CLIFFORD TRANSPORT, INC., Box 400, Authuen, Ontario, Canada MOP 2 GO. Transferor: DALTON EQUIPMENT LIMITED, Box 458, Tilbury, Ontario, Canada. Representative: Miss Wilhelmina Boersma, Attorney at Law, 1600 First Federal Bldg., Detroit, MI 48226. Authority sought for purchase by Transferee of the operating rights of transferor, as set forth in Certificate No. MC-142023 (Sub-No. 1), issued January 31, 1979, as follows: (1) *Tractors* (except tractors equipped with vehicle beds, bed frames, or fifth wheels), and (2) *agricultural implements, attachments,* and *tractor parts,* in mixed loads with tractors, as described in (1) above, with restrictions from the plant sites of Massey-Ferguson, Inc., at Detroit and Dearborn, MI, to the ports of entry on the United States-Canada Boundary line located at Detroit, MI. Transferee presently holds no authority from this Commission. Application has not been filed for temporary authority under Section 210a(b).

MC-FC-77991, filed January 4, 1979. Transferee: TIGHE TRUCKING, INC., 45 Holton Street, Winchester, MA 01890. Transferor: GRINGERI BROS. TRANSPORTATION CO., INC., (M.G. Sherman Trustee in Bankruptcy), c/o M. G. Sherman, 18 Tremont Street, Boston, MA 02108. Representative: Mary E. Kelley, 11 Riverside Avenue, Medford, MA 02155. Frank J. Weiner, 15 Court Square, Boston, MA 021080.Authority sought for purchase by transferee of a portion of the operating rights of transferor as set forth in Certificate No. MC-117758 (Sub-4) and all of the operating rights of transferor as set forth in Certificate No. MC-117758 (Sub-5) issued October 24, 1975 and November 24, 1975 respectively, authorizing the transportation of (1) general commodities, with usual exceptions, over regular routes, between Pascoag, Providence and Woonsocket, RI, Boston, Worchester, Lawrence, and New Bedford, MA including intermediate and off-route points in MA and RI; (2) wool, wooltops, yarn, textile products chemicals, machinery and commodities used or useful in the manufacture of wool, yarn, and textile products, over irregular routes, between specific points in RI on the one hand, and, on the other specific points in MA and CT; and (3) new furniture, over irregular routes, from Boston, MA and points within 15 miles thereof to points in ME, NH, MA, RI, and CT and damaged, rejected or return shipments on return. An application under Section 210a(b) has also been filed. Transferee holds authority from this Commission in Certificate of Registration NO. MC-104967 (Sub-No. 11).

MC-FC-77994, filed January 3, 1979. Transferee: CARMEN W. SACCO, doing business as SACCO'S TRUCKING, 76 Turner Ave., Pittsfield, MA 01201. Transferor: DAVID L. DUCHESNEAU, doing business as ALLWAYS MOVING & WAREHOUSING CO., 20 Keeler Street, Pittsfield, MA 01201. Authority sought for purchase by transferee of the operating rights of transferor set forth in Certificate No. MC-95097, issued September 18, 1974, as follows: Household goods, as defined by the Commission, between Pittsfield, MA and points within 5 miles of Pittsfield, on the one hand, and, on the other, points in CT, NJ, NY, RI, and VT. Transferee holds authority from this Commission in Certificate No. MC-95147. Application has not been filed for section 210a(b) authority.

H. G. HOMME, Jr.,
*Secretary.*

[FR Doc. 79-4990 Filed 2-14-79; 8:45 am]

---

[7035-01-M]

[Notice No. 21]

## MOTOR CARRIER TEMPORARY AUTHORITY APPLICATIONS

FEBRUARY 9, 1979.

Important Notice: The following are notices of filing of applications for temporary authority under Section 210a(a) of the Interstate Commerce Act provided for under the provisions of 49 CFR 1131.3. These rules provide that an original and six (6) copies of protests to an application may be filed with the field official named in the FEDERAL REGISTER publication no later than the 15th calendar day after the date the notice of the filing of the application is published in the FEDERAL REGISTER. One copy of the protest must be served on the applicant, or its authorized representative, if any, and the protestant must certify that such service has been made. The protest must identify the operating authority upon which it is predicated, specifying the "MC" docket and "sub" number and quoting the particular portion of authority upon which it relies. Also, the protestant shall specify the service it can and will provide and the amount and type of equipment it will make available for use in connection with the service contemplated by the TA application. The weight accorded a protest shall be governed by the completeness and pertinence of the protestant's information.

Except as otherwise specifically noted, each applicant states that there will be no significant effect on the quality of the human environment resulting from approval of its application.

A copy of the application is on file, and can be examined at the Office of the Secretary, Inter-state Commerce Commission, Washington, D.C., and also in the ICC Field Office to which protests are to be transmitted.

NOTE.—All applications seek authority to operate as a common carrier over irregular routes except as otherwise noted.

### MOTOR CARRIERS OF PROPERTY

MC 78228 (Sub-103TA), filed January 12, 1979. Applicant: J. MILLER EXPRESS, INC., 962 Greentree Road, Pittsburgh, PA 15220. Representative: Henry M. Wick, Jr., 2310 Grant Building, Pittsburgh, PA 15219. *Pig iron, in dump vehicles,* from Camden, NJ to Laconia, NH for 180 days, An underlying ETA seeks 90-day authority. Supporting Shipper(s): Philipp Brothers, a Division of Engelhard Minerals and Chemicals Corp., 1221 Ave of the Americas, New York, NY 10020. Send protest to: J. A. Niggemyer, DS, 416 Old PO Bldg., Wheeling, WV 26003.

MC 82063 (Sub-100TA), filed January 25, 1979: Applicant: KLIPSCH HAULING CO., 10795 Watson Road, Sunset Hills, MO 63127. Representative: W. E. Klipsch (same address as applicant). *Hydrobromic Acid,* in bulk, in rubber-lined tank vehicles, from Eldorado, AR to Selkirk, NY, McIntosh, AL, Channelview, TX, Livonia, MI and Joliet, IL, for 180 days. An underlying ETA seeks 90 days authority. Supporting Shipper: Great Lakes Chemical Corp., P.O. Box 1878, Eldorado, AR 71730. Send protest to: Peter E. Binder, ADS, ICC, Rm 1465, 210 N 12th St., St. Louis, MO 63101.

MC 83835 (Sub-155TA), filed January 5, 1979. Applicant: WALES TRANSPORTATION, INC., P.O. Box 226186, Dallas, TX 75222. Representative: J. Michael Alexander, 136 Wynnewood Professional Building, Dallas, TX 75224. *Lumber* from the facilities of F. H. Stoltze Land &

Lumber Co. at Columbia Falls, MT, Darby, MT, and Dillon, MT to points in AR, IL, IN, IA, KS, KY, LA, MI, MN, MO, NE, OH, OK, PA, and TN for 180 days. Supporting Shipper(s): F. H. Stoltze Land & Lumber Co., P.O. Box 490, Columbia Falls, MT 59912. Send protests to: Opal M. Jones, Trans. Asst., Interstate Commerce Commission, 1100 Commerce Street, Room 13C12, Dallas, TX 75242.

MC 100666 (Sub-422TA), filed January 2, 1979. Applicant: MELTON TRUCK LINES, INC., P.O. Box 7666, Shreveport, LA 71107. Representative: Wilburn L. Williamson, Suite 615-East, The Oil Center, 2601 Northwest Expressway, Oklahoma City, OK 73112. *Such commodities as are dealt in by agricultural equipment, industrial equipment, and lawn and leisure product dealers (except commodities in bulk)*, from the facilities of Deere & Company located in Black Hawk, Dubuque, Polk, Scott and Wapello Counties, IA; Rock Island County, IL; and Dodge County, WI to points in AL south of Interstate Hwy 59, FL, GA, NC, SC and VA, for 180 days. An underlying ETA seeks 90 days authority. Supporting Shipper(s): Deere & Company, John Deere Road, Moline, IL 61265. Send protests to: Connie A. Guillory, ICC, T-9038 Federal Bldg., 701 Loyola Ave., New Orleans, LA 70113.

MC 106398 (Sub-857TA), filed January 15, 1979. Applicant: NATIONAL TRAILER CONVOY, INC., 525 South Main, Tulsa, OK 74103. Representative: Irvin Tull, 525 South Main, Tulsa, OK 74103. *Plywood, composition board and paneling* from the facilities of Plywood Panels, Inc. at New Orleans, LA, to points in AL, FL, GA, IN, MS, NC, OK, TN and TX, for 180 days. An underlying ETA seeks 90 days authority. Supporting Shipper(s): Plywood Panels, Inc., P.O. Box 15435, 100 Napoleon Ave., New Orleans, LA 70175. Send protests to: Connie Stanley, Transportation Assistant, Interstate Commerce Commission, Room 240 Old Post Office & Court House Bldg., 215 Northwest 3rd, Oklahoma City, OK 73102.

MC 107515 (Sub-1199TA), filed January 10, 1979. Applicant: REFRIGERATED TRANSPORT CO., INC., P.O. Box 308, Forest Park, GA 30050. Representative: Alan E. Serby and Richard M. Tettelbaum, Serby & Mitchell, P.C., Fifth Floor, Lenox Towers South, 3390 Peachtree Road NE., Atlanta, GA 30326. *Drugs and medicines* from the facilities of Glenbrook Laboratories, Division of Sterling Drug, Inc., at or near Gulfport, MS to Secaucus, NJ, for 180 days. An underlying ETA seeks 90 days. Supporting Shipper(s): Sterling Drug, Inc., 90 Park Ave., New York, NY 10016. Send protests to: Sara K. Davis, T/A, Bureau of Operations, Interstate Commerce Commission, 1252 W. Peachtree St. NW., Room 300, Atlanta, GA 30309.

MC 108207 (Sub-495TA), filed January 15, 1979. Applicant: FROZEN FOOD EXPRESS, INC., P.O. Box 225888, Dallas, TX 75265. Representative: M. W. Smith (same address as applicant). *Meats, meat products, and meat byproducts* from Brush, CO. to Los Angeles, Lodi, Fresno, and Bakersfield, CA for 180 days. Underlying ETA for 90 days filed. Supporting Shipper(s): The Sigman Meat Co., Inc., 800 So. Railway, Brush, CO 80723. Send protests to: Opal M. Jones, Trans. Asst., Interstate Commerce Commission, 1100 Commerce Street, Room 13C12, Dallas, TX 75242.

MC 108207 (Sub-496TA), filed January 15, 1979. Applicant: FROZEN FOOD EXPRESS, INC., P.O. Box 225888, Dallas, TX 75265. Representative: M. W. Smith (same as above). *Foodstuffs (except in bulk), in mechanically refrigerated equipment* from Chicago, IL to points in IN, MI, MN, and OH for 180 days. Supporting shipper(s): Sage Foods, 300 East Tougy, Des Plaines, IL 60018. Send protests to: Opal M. Jones, Trans. Asst., Interstate Commerce Commission, 1100 Commerce Street, Room 13C12, Dallas, TX 75242

MC 109124 (Sub-58TA), filed January 9, 1979. Applicant: SENTLE TRUCKING CORP., P.O. Box 7850, Toledo, OH 43619. Representative: H. David McKnight (same address as applicant). *Iron and Steel Articles*, from the plantsites of Republic Steel Corporation at Canton, Cleveland, Elyria, Niles, Warren and Youngstown, OH to points in the states of IL, IN, and MI, for 180 days. An underlying ETA seeks 90 days authority. Supporting Shipper(s): Republic Steel Corp., Room 503-Republic Bldg., Cleveland, OH 44101. Send protests to: Interstate Commerce Commission, Room 313, Federal Office Bldg., 234 Summit St., Toledo, OH 43604.

MC 109397 (Sub-444TA), filed January 16, 1979. Applicant: TRI-STATE MOTOR TRANSIT CO., P.O. Box 113, Joplin, MO 64801. Representative: Max G. Morgan, P.O. Box 1540, Edmond, OK 73034. *Uranium concentrate (Yellowcake)*, from mill of Atlas Minerals, near Moab, UT to conversion plant of Kerr McGee, near Gore, OK for 180 days. An underlying ETA seeks 90 days authority. Supporting Shipper(s): Atlas Minerals, 1050 17th St., Suite 2506, Denver, CO 80265. Send protests to: John V. Barry, DS, ICC, 600 Federal Bldg., 911 Walnut St., Kansas City, MO 64106.

MC 111320 (Sub-71TA), filed January 8, 1979. Applicant: KEEN TRANSPORT, INC., 2001 Barlow Road, Hudson, OH 44236. Representative: Michael Spurlock, 275 East State Street, Columbus, OH 43215. *Road building and construction equipment* from the facilities of Fiat-Allis Construction Machinery, Inc., at or near Portsmouth, VA, to points in PA, and OH, for 180 days. An underlying ETA seeks 90 days authority. Supporting Shipper(s): Fiat-Allis Construction Machinery, Inc., 300 South Sixth Street, Springfield, IL 62710. Send protests to: Mary A. Wehner, District Supervisor, Interstate Commerce Commission, 1240 E. Ninth Street, Cleveland, OH 44199.

MC 113908 (Sub-460TA), filed January 16, 1979. Applicant: ERICKSON TRANSPORT CORP., 2105 East Dale Street, P.O. Box 10068, G.S., Springfield, MO 65804. Representative: B. B. Whitehead (same address as applicant). *Lecithin*, in bulk, from Stuttgart, AR, and the commerical zone thereof, to Hillsdale, MI, Burlington, WI, Milwaukee, WI, Chicago, IL, Carlstadt, NJ, and Carnegie, PA, and their respective commercial zones for 180 days. An underlying ETA seeks 90 days authority. Supporting Shipper(s): American Lecithin Company, P.O. Box 4056, Atlanta, GA 30302. Send protests to: John V. Barry, DS, ICC, 600 Federal Bldg., 911 Walnut St., Kansas City, MO 64106.

MC 113908 (Sub-461TA), filed January 16, 1979. Applicant: ERICKSON TRANSPORT CORP., 2105 East Dale Street, P.O. Box 3180, G.S.S., Springfield, MO 65804. Representative: B. B. Whitehead (same address as applicant). *Chemicals*, in bulk, from Los Angeles, CA, and the commercial zone thereof, to points in PA for 180 days. An underlying ETA seeks 90 days authority. Supporting Shipper(s): West Chemical Products, Inc., 42-16 West St., Long Island City, NY 11101. Send protests to: John V. Barry, DS, ICC, 600 Federal Bldg., 911 Walnut St., Kansas City, Mo 64106.

MC 113908 (Sub-462TA), filed January 24, 1979. Applicant: ERICKSON TRANSPORT CORP., P.O. Box 3180, Springfield, MO 65804. Representative: B. B. Whitehead (same address as applicant). *Wine and wine products, in bulk*, from Delano and Tulare, CA and their commercial zones, to points in OH for 180 days. An underlying ETA seeks 90 days authority. Supporting Shipper(s): Sierra Wine Corp., 1887 N. Mooney Blvd., Tulare, CA 93274. Send protests to: DS John V. Barry, ICC, 600 Federal Bldg., 911 Walnut, Kansas City, MO 64106.

MC 113908 (Sub-463TA), filed January 24, 1979. Applicant: ERICKSON TRANSPORT CORP., P.O. Box 3180

G.S.S., Springfield, MO 65804. Representative: B. B. Whitehead (same as applicant). *Alcoholic liquors and alcohol, in bulk,* from points in PA, to Bardstown, KY and its commercial zone for 180 days. An underlying ETA seeks 90 days authority. Supporting Shipper(s): Barton Brands, Ltd., Barton Road, Bardstown, KY 40004. Send protests to: DS John V. Barry, ICC, 600 Federal Bldg., 911 Walnut St., Kansas City, MO 64106.

MC 114273 (Sub-531TA), filed January 16, 1979. Applicant: CRST, INC., P.O. Box 68, Cedar Rapids, IA 52406. Representative: Kenneth L. Core, Commerce Attorney (same as applicant). (1) Chemicals and fertilizers, (except in bulk, in tank vehicles), from Carteret, NJ; Chesapeake, VA; Columbus, OH; Norfolk, VA; Trenton and Wyandotte, MI to West Des Moines, IA, (2) Iron and steel articles from Piqua, OH to West Des Moines, IA for 180 days. The purpose of this application is to eliminate joint-line service. Supporting Shipper(s): Ross Daniels, Inc., 1720 Fuller Road, West Des Moines, IA 50265. Send protests to: Herbert W. Allen, DS, ICC, 518 Federal Bldg., Des Moines, IA 50309.

MC 114273 (Sub-532TA), filed January 16, 1979. Applicant: CRST, INC., P.O. Box 68, Cedar Rapids, IA 52406. Representative: Kenneth L. Core, Commerce Attorney (same as applicant). *General commodities (except those of unusual value, Class A & B explosives, household goods, commodities in bulk and commodities requiring special equipment),* from the facilities utilized by NEPSCA Inc. at or near Scranton, PA to Chicago, IL and St. Louis, MO. for 180 days. The purpose of this application is to eliminate joint line service. Supporting Shipper(s): Northeastern Pennsylvania Shippers Cooperative Association, Inc. (NEPSCA), Suite 300, Penn Park Building, Pittston, PA 18640. Send protests to: Herbert W. Allen, DS, ICC, 518 Federal Bldg., Des Moines, IA 50309.

MC 114604 (Sub-67TA), filed January 16, 1979. Applicant: CAUDELL TRANSPORT, INC., P.O. Drawer I, Forest Park, GA 30050. Representative: Frank D. Hall, Suite 713, 3384 Peachtree Rd., NE, Atlanta, GA 30326. *Sugar* from points in LA to points in MS, AL, GA, FL, TN, OK, AR, NC and SC, for 180 days. An ETA seeks 90 days authority. Supporting Shipper(s): Godchaux Henderson, P.O. Drawer AM, Reserve, LA 70084; Colonial Sugar Company, 129 S. Fifth Ave., Gramercy, LA 70052; Southdown Sugars, Inc., P.O. Box 52, New Orleans, LA 70112; and Amstar Corporation, 7417 N. Peters St., Arabi, LA 70032. Send protests to: Sara K. Davis, T/A, ICC, 1252 W. Peachtree St., N.W., Rm. 300, Atlanta, GA 30309.

MC 115322 (Sub-161TA), filed January 22, 1979. Applicant: REDWING REFRIGERATED, INC., 9831 South Orange Avenue, P.O. Box 10177, Taft, FL 32809. Representative: L. W. Fincher, P.O. Box 426, Tampa, FL 33601. (1) *Foodstuffs* from Cobb, Fulton, DeKalb, and Clayton Counties, GA, to points in TX, LA, AR, MO, IL, IN, KY, OH, WV, VA, MD, DC, NC, SC, FL, AL, MS, and TN. (2) *Foodstuffs* from Prince Georges, Anne Arundel, Howard, Baltimore County, and Baltimore, MD to CT, DE, IL, IN, KY, ME, MA, MI, MO, NH, NJ, NY, OH, PA, RI, VT, VA, WV, WI, DC, GA, FL, NC, SC, TN, AR, MS, AL, and TX, for 180 days. Supporting Shipper(s): J. H. Filbert, Inc., 3701 Southwestern Blvd., Baltimore, MD 21929. Send protests to: G. H. Fauss, Jr., DS, ICC, Box 35008, 400 West Bay Street, Jacksonville, FL 32202.

MC 115331 (Sub-479TA), filed January 16, 1979. Applicant: TRUCK TRANSPORT INCORPORATED, 29 Clayton Hills Lane, St. Louis, MO 63131. Representative: J. R. Ferris, 11040 Manchester Rd., St. Louis, MO 63122. *Dolomite, in bulk, in tank vehicles* from Woodville, OH to Kansas City, KS, for 180 days. An underlying ETA seeks 90 days authority. Supporting Shipper(s): Owens-Corning Fiberglas Corporation, Fiberglas Tower, Toledo, OH 43659. Send protests to: P. E. Binder, DS, Interstate Commerce Commission, Bureau of Operations, Room 1465, 210 N. 12th St., St. Louis, MO 63101.

MC 115841 (Sub-666TA), filed January 19, 1979. Applicant: COLONIAL REFRIGERATED TRANSPORTATION, INC., 9041 Executive Park Drive, Suite 110, Building 100, Knoxville, TN 37919. Representative: D. R. Beeler (same address as applicant.) *Bananas, pineapples and agricultural commodities,* from Charleston, SC and Tampa, FL to points in VA, WV, MD, and D.C. for 180 days. An underlying ETA seeks 90 days authority. Supporting Shipper(s): Del Monte Bananas, P.O. Box 011940, Miami, FL 33101. Send protest to: Glenda Kuss, TA, ICC, Suite A-422 U.S. Court House, 801 Broadway, Nashville, TN 37203.

MC 116254 (Sub-242TA), filed January 29, 1979. Applicant: CHEM-HAULERS, INC., 118 East Mobile Plaza, Florence, AL 35630. Representative: Mr. Randy C. Luffman (same address as applicant). *Dimethyl Phosphorochloridothionate, Corrosive Liquid, NOS,* from Mt. Pleasant, TN, to Richmond, CA, for 180 days. An underlying ETA seeks 90 days authority. Supporting Shipper(s): Stauffer Chemical Co., Westport, CT 06880. Send protest to: Mabel E. Holston, Transportation Asst., Bureau of Operation, ICC, Room 1616, 2121 Building, Birmingham, AL 35203.

MC 116254 (Sub-243TA), filed January 22, 1979. Applicant: CHEM HAULERS, INC., 118 East Mobile Plaza, Florence, AL 35630. Representative: Mr. Randy C. Luffman, 118 East Mobile Plaza, Florence, AL 35630. *Shredded Scrap Steel,* from Jackson, TN, to Bessemer and Birmingham, AL, for 180 days. An underlying ETA seeks 90 days authority. Supporting Shipper(s): H. O. Forgy and Son, Inc., P.O. Box 908, Jackson, TN 38301. Send protests to: Mabel Holston, Transportation Assistant, Bureau of Operation, ICC, Room 1616,2121 Building, Birmingham, AL 35203.

MC 116254 (Sub-244TA), filed January 24, 1979. Applicant: CHEM HAULERS, INC., 118 East Mobile Plaza, Florence, AL 35630. Representative: Randy C. Luffman, PO Box 339, Florence, AL 35630. *Loose oily brass turnings and contaminated brass, copper, zinc and lead items for recyling purposes,* from Decatur, AL, to Montpelier, OH, East Alton, IL and Atlanta, GA, for 180 days. An underlying ETA seeks 90 days authority. Supporting Shipper(s): Denbo Iron and Metal Co., Inc., P.O. Box 1553, Decatur, AL 35602. Send protests to: Mabel E. Holston, Transportation Assistant, Bureau of Operation, ICC, Room 1616, 2121 Building, Birmingham, AL 35203.

MC 116254 (Sub-245TA), filed January 26, 1979. Applicant: CHEM HAULERS, INC., 118 East Mobile Plaza, Florence, AL 35630. Representative: Mr. Randy C. Luffman, PO Box 339, Florence, AL 35630. *Chemicals, liquid,* from Mt. Pleasant, TN, to Henderson, NV, for 180 days. An underlying ETA seeks 90 days authority. Supporting Shipper(s): Stauffer Chemical Co., Westport, CT 06880. Send protests to: Mabel E. Holston, Transportation Assistant, Bureau of Operation, ICC, Room 1616-2121 Building, Birmingham, AL 35203.

MC 116254 (Sub-245TA), filed January 29, 1979. Applicant: CHEM HAULERS, INC., 118 East Mobile Plaza, Florence, AL 35630. Representative: Mr. Hampton M. Miller, (same address as above). (1) *Petroleum, Petroleum Products, vehicles body sealer and/or sound deadener compounds,* (except in bulk, in tank vehicles), *and filters;* From: Points in Warren County, MS, To: Points in the U.S., except AK and HI and (2) *Petroleum, Petroleum Products, vehicles body sealer and/or sound deadener compounds, filters, materials, supplies, and equipment, as are used in the manufacture, sale, and distribution of the commodities named in Part I above,* (except in bulk, in tank vehicles); From: Points in AL, GA, IL, IN, KY, NY, OH, OK, PA, RI,

SC, VA and WV; To Points in Warren County, MS. Restricted in Parts (1) and (2) above to shipments originating at or destined to the facilities of Quaker State Oil Refining Corporation located in Warren County, MS, for 180 days. Supporting Shipper(s): Quaker State Oil Refining Corp., P.O. Box 989, Oil City, PA 16301. Send protests to: Mabel Holston, Transportation Assistant, Bureau of Operation, ICC, Room 1616, 2121 Building, Birmingham, AL 35203.

MC 118959 (Sub-195TA), filed January 25, 1979. Applicant: JERRY LIPPS, INC., 130 S. Frederick St., Cape Girardeau, MO 63701. Representative: Donald B. Levine, 39 S. LaSalle St., Chicago, IL 60603. *Bakery Goods,* other than frozen, from the facilities of Mother's Cookie Co., located at Louisville, KY to points in the US in and east of ND, SD, NE, OK and TX; and *Materials, equipment and supplies* (except commodities in bulk) used in the manufacture, sale, or distribution of bakery goods, from points in the US in and east of ND, SD, NE, KS, OK and TX to the facilities of Mother's Cookie Co. at Louisville, KY, for 180 days. Supporting Shipper(s): Mother's Cookie Co., 2287 Ralph Ave., Louisville, KY. Send protests to: P. E. Binder, ADS, ICC, Rm. 1465, 210 N. 12th St., St. Louis, MO 63101.

MC 119493, (Sub-261TA), filed January 16, 1979. Applicant: MONKEM COMPANY, INC., P.O. Box 1196, Joplin, MO 64801. Representative: Thomas D. Boone, (Same address as applicant). *Plastic film and plastic articles* (except in bulk), from North Little Rock, AR and its commercial zone to AL, CO, FL, GA, IL, LA, MO, NM, OK, RI, TN, and TX for 180 days. An underlying ETA seeks 90 days authority. Supporting shipper(s): Williams Plastic Company, Inc., 309 Phillips Road, North Little Rock, AR 72117. Send protests to: John V. Barry, DS, ICC, 600 Federal Bldg., 911 Walnut St., Kansas City, MO 64106.

MC 119531 (Sub-167TA), filed January 25, 1979. Applicant: SUN EXPRESS, INC., P.O. Box 1031, Warren, OH 44482. Representative: Beery & Spurlock Co., 275 E. State Street, Columbus, OH 43215. *Glass containers and accessories* from Richmond, IN, to points in IL, IA, KY, MI, MO, OH and WI for 180 days. An ETA for 90 days has been sought. Supporting Shipper(s): Anchor Hocking Corporation, 109 North Broad Street, Lancaster, OH 43130. Send protests to: Mary A. Wehner, District Supervisor, Interstate Commerce Commission, 1240 E. Ninth Street, Cleveland, OH 44199.

MC 119789 (Sub-539TA), filed January 15, 1979. Applicant: CARAVAN REFRIGERATED CARGO, INC., P.O. Box 226188, Dallas, TX 75266. Representative: James K. Newbold, Jr. (Same as applicant). *Foodstuffs* (except in bulk), other than frozen, from facilities of RJR Foods, Inc. at or near Cambridge, MD to Kansas City, KS; Kenner, LA; Garland and Houston, TX for 180 days. ETA filed for 90 days. Supporting Shipper(s): RJR Foods, Inc., Winston-Salem, NC 27106. Send protests to: Opal M. Jones, Trans. Asst., Interstate Commerce Commission, 1100 Commerce Street, Room 13C12, Dallas, TX 75242.

MC 121060 (Sub-89TA), filed January 24, 1979. Applicant: ARROW TRUCK LINES, INC., P.O. Box 1416, Birmingham, AL 35201. Representative: William P. Jackson, Jr., 3426 North Washington Blvd., P.O. Box 1240, Arlington, VA 22210. *Iron and steel articles,* from the facilities of United States Steel Corporation at or near Clairton, Duquesne, Fairless, Homestead, Dravosburg, Johnstown, McKeesport, McKees Rocks, and Vandergrift, PA, and Cleveland, Lorain and Youngstown, OH, to points in OH on and south of Interstate Highway 70, and to points in WV, KY, TN, AR, MO, LA, MS, and AL, for 180 days. An underlying ETA seeks 90 days authority. Supporting Shipper(s): United States Steel Corporation, 600 Grant Street, Room 568, Pittsburgh, PA 15230. Send protests to: Mable E. Holston, Transportation Asst., Bureau of Operation, ICC, Room 1616, 2121 Bldg., Birmingham, AL 35203.

MC 123685 (Sub-25TA), filed January 11, 1979. Applicant: PEOPLES CARTAGE, INC., 8045 Navarre Road, S.W., Massillin, Ohio 44646. Representative: Boyd E. Ferris, Muldoon, Pemberton & Ferris, 50 West Broad Street, Columbus, Ohio 43215. *Such commodities as are dealt in or used by processors and distributors of salt and salt products* between Rittman, Fairport Harbor, Cincinnati, and Cleveland, OH, on the one hand, and, on the other, points in WV, PA, NY, MI, IL, IN, KY, TN, VA, MD, NJ, and the district of Columbia for 180 days. Supporting Shipper(s): Morton Salt, Division Morton-Norwich, 110 North Walker Drive, Chicago, IL 60606; International Salt Company, Clarks Summit, PA 18411; Domtar Industries, Inc. Chicago O'Hare Aerospace Office Center, 9950 West Laurence Ave, Suite 406, Schiller Park, IL 60176. Send protests to: Frank L. Calvary, District Supervisor, Interstate Commerce Commission, 220 Federal Building and U.S. Courthouse, 85 Marconi Boulevard, Columbus, Ohio 43215.

MC 123872 (Sub-95TA), filed January 23, 1979. Applicant: W & L MOTOR LINES, INC., P.O. Box 3467, Hickory, NC 28601. Representative: Theodore Polydoroff, Suite 301, 1307 Dolley Madison Blvd., McLean, VA 22101. *New furniture and furniture parts* from the facilities of Burlington Furniture Division of Burlington Industries Inc., located in Davidson and Guilford Counties, NC to points in CA, CO, NM, OK and TX, for 180 days. Supporting Shipper(s): Burlington Furniture Division, Burlington Industries, Inc., P.O. Box 907, Lexington, NC 27292. Send protests to: District Supervisor Terrell Price, 800 Briar Creek Rd-Rm CC516, Mart Office Building, Charlotte, NC 28205.

MC 126473 (Sub-35TA), filed January 3, 1979. Applicant: HAROLD DICKEY TRANSPORT, INC., Packwood, IA 52580. Representative: Kenneth F. Dudley, 611 Church Street, P.O. Box 279, Ottumwa, IA 52501. *Meats, meat products, meat by-products and articles distributed by meat packing plants, except hides and commodities in bulk,* from the facilities of Geo. A. Hormel & Co. at or near Fremont, NE to AL, FL, GA, NC, SC, and TN, for 180 days. An underlying ETA seeks 90 days authority. Supporting Shipper(s): Geo. A. Hormel & Co., P.O. Box 800, Austin, MN 55912. Send protests to: Herbert W. Allen, DS, ICC, 518 Federal Building, Des Moines, IA 50309.

MC 126844 (Sub-68TA), filed January 19, 1979. Applicant: R.D.S. TRUCKING CO., INC., 1713 North Main Road, Vineland, NJ 08360. Representative: Kenneth F. Dudley, P.O. Box 279, Ottumwa, IA 52501. *Bananas and pineapples,* from Wilmington, DE to points in CT, MS, GA, MO, DC, DE, IL, IN, KY, MD, MI MN, NJ, NY NC, OH, PA, SC, TN, VA, WV, WI, and KS, for 180 days. Supporting Shipper(s): Del Monte Banana Company, P.O. Box 011940, Miami, FL 33101. Send protests to: District Supervisor, ICC, 428 East State Street, Room 204, Trenton, NJ 08608.

MC 126844 (Sub-69TA), filed January 25, 1979. Applicant: R.D.S. TRUCKING CO., INC., 1713 North Main Road, Vineland, NJ 08360. Representative: Kenneth F. Dudley, 611 Church Street, P.O. Box 279, Ottumwa, IA 52501. *Meats, meat products, meat by-products and articles distributed by meat packing houses,* (except hides and commodities in bulk), from the facilities owned or utilized by Geo. A. Hormel & Co. at Huron and Sioux Falls, SD to points in OH, PA, NY, and NJ, for 180 days. Supporting Shipper(s): Geo. A. Hormel & Company, P.O. Box 800, Austin, MN 55912. Send protests to: District Supervisor, ICC, 428 East State Street, Room 204, Trenton, NJ 08608.

MC 127042 (Sub-237TA), filed January 5, 1979. Applicant: HAGEN, INC., 3232 Highway 75 North, P.O. Box 98-Leeds Station, Sioux City, IA 51108.

Representative: Robert G. Tessar, same address as applicant. *Meats, meat products, and meat by-products, and articles distributed by meat packinghouses as described in Appendix I to the report in Descriptions in Motor Carrier Certificates 61 MCC 209 and 766,* except hides and commodities in bulk, *in tank vehicles,* from Harlan, IA to points in CA for 180 days. An underlying ETA seeks 90 days authority. Supporting Shipper(s): Gary McFarland, Western Iowa Pork, P.O. Box 510, Harlan, IA 51537. Send protests to: Carroll Russell, ICC, Suite 620, 110 No. 14th St., Omaha, NE 68102.

MC 128555 (Sub-25TA), filed January 25, 1979. Applicant: MEAT DISPATCH, INC., 2103 17th Street, East, Palmetto, FL 33561. Representative: Robert D. Gunderman, Esq., 710 Statler Bldg., Buffalo, NY 14202. *Contract carrier*—Irregular route: *Citrus juices* and *beverages,* in containers, from the facilities of Tropicana Products, Inc., Bradenton (Manatee County), FL to points in OK and TX, for 180 days. An underlying ETA seeds 90 days authority. Supporting Shipper(s): Tropicana Products, Inc., P.O. Box 338, Bradenton, FL 33506. Send protests to: Donna M. Jones, Transportation Assistant, Interstate Commerce Commission—BOp, Monterey Building, Suite 101, 8410 N.W. 53rd Terrace, Miami, FL 33166.

MC 128607 (Sub-10TA), filed January 16, 1979. Applicant: BOYD TRUCKING CO., Gas Point Road (P.O. Drawer T), Cottonwood, CA 96022. Representative: Marvin Handler, Handler, Baker & Green, P.C., 100 Pine Street, Suite 2550, San Francisco, CA 94111. *Wood residuals in bulk* from points in Shasta, Tehama, Butte, Plumas, and Glenn Counties, CA to points in Jackson and Klamath Counties, OR, for for 180 days. An underlying ETA seeks 90 days authority. Supporting Shipper(s): Fibreboard Corporation, 4300 Dominquez Road, Rocklin, CA 95677. Louisiana-Pacific Corporation, POB 629, Red Bluff, CA 96080. Paul Bunyan Lumber Company, POB 487, Anderson, CA 96007. Rocklin Moulding, Inc., POB Q, Cottonwood, CA 96022. Send protests to: District Supervisor A. J. Rodriguez, 211 Main Street, Suite 500, San Francisco, CA 95105.

MC 129010 (Sub-17TA), filed January 22, 1979. Applicant: SERVICE EXPRESS, INC., P.O. Box 1009, Tuscaloosa, AL 35401. Representative: William P. Jackson, Jr., 3426 North Washington Boulevard, P.O. Box 1240, Arlington, VA 22210. *Paper and paper products* (except in bulk), from the facilities of Union Camp Corporation at or near Prattville, AL, to the facilities of Union Camp Corporation at or near Houston, MS, Atlanta, GA, and Lakeland, FL, for 180 days. Supporting Shipper(s): Union Camp Corporation, 1600 Valley Road, Wayne, NJ 07470. Send protests to: Mabel E. Holston, Transportation Assistant, Bureau of Operation, ICC, Room 1616—2121 Building, Birmingham, AL 35203.

MC 135078 (Sub-38TA), filed January 8, 1979. Applicant: AMERICAN TRANSPORT, INC., 7850 "F" St., Omaha, NE 68127. Representative: Arthur J. Cerra, 2100 TenMain Center, P.O. Box 19251, Kansas City, MO 64141. *Such commodities as are dealt in and sold by retail department and discount stores (except commodities in bulk),* from the commercial zones of Dalton, GA and Charlotte, NC, and points in CT, IL, MA, NJ, NY, and PA to the facilities of Mid-West Pool Car Shipping Association, Inc., at or near Denver, CO, for for 180 days. An underlying ETA seeks 90 days authority. Supporting Shipper(s): A. R. McKean, Mid-West Pool Car Shipping Association, Inc., 1911 Nineteenth St., P.O. Box 5686—Terminal Annex, Denver, CO 80217. Send protests to: Carroll Russell, DS, Suite 620, 110 No. 14th St., Omaha, NE 68102.

MC 136008 (Sub-101TA), filed January 12, 1979. Applicant: JOE BROWN COMPANY, INC., 8005 South I-35, Suite 102, Oklahoma City, OK 73149. Representative: John Tipsword, 8005 S. I-35, Suite 102, Oklahoma City, OK 73149. *Cement,* in bulk, in tank vehicles, from Chicago, IL to Oklahoma City, OK, for 180 days. An underlying ETA seeks 90 days authority. Supporting Shipper(s): Harter Concrete Products, Inc., 1628 W. Main, Oklahoma City, OK 73106. Send protests to: Connie Stanley, Transportation Assistant, Interstate Commerce Commission, Room 240, Old Post Office & Court House Bldg., 215 N.W. 3rd, Oklahoma City, OK 73102.

MC 138313 (Sub-52TA), filed January 15, 1979. Applicant: BUILDERS TRANSPORT, INC., 409 14th Street SW., Great Falls, MT 59404. Representative: Miss Irene Warr, 430 Judge Building, Salt Lake City, UT 84111. *Fertilizer* and *soil conditioners* (1) from the U.S.-Canada International Boundary line to points in MT, ID, WA and OR and (2) from Caribou and Kootenai Counties, ID and Benton and Franklin Counties, WA to points in MT, for 180 days. An underlying ETA seeks 90 days authority. Supporting Shipper(s): Agricultural Management Services, Montana Merchandising, Inc., 800 6th St. SW., P.O. Box 944, Great Falls, MT 59404; Great Plains Crop Management, Inc., 437 Deerfield Ct., Great Falls, MT 59401; North Pacific Trading Company, P.O. Box 3915, Portland, OR 97208. Send protests to: Paul J. Labane, DS, ICC, 2602 First Avenue North, Billings, MT 59101.

MC 138512 (Sub-36TA), filed January 11, 1979. Applicant: ROLAND'S TRANSPORTATION SERVICES, INC., d.b.a. Wisconsin Provisions Express, P.O. Box 477, Cudahy, WI 53110. Representative: Allan J. Morrison (same address as applicant). Contract carrier: irregular routes: *Cheese, cheese foods & synthetic cheeses,* from the facilities of L. D. Schreiber Cheese Co., Inc. at or near Logan, UT to points in CA, for 180 days. An underlying ETA seeks 90 days authority. Supporting Shipper(s): L. D. Schreiber Cheese Co., Inc., P.O. Box 610, Green Bay, WI 54305. Send protests to: Gail Daugherty, Transportation Asst., Interstate Commerce Commission, Bureau of Operations, U.S. Federal Building and Courthouse, 517 East Wisconsin Avenue, Room 619, Milwaukee, WI 53202.

MC 138875 (Sub-134TA), filed January 17, 1979. Applicant: SHOEMAKER TRUCKING CO., 11900 Franklin Road, Boise, ID 83705. Representative: F. L. Sigloh, 11900 Franklin Road, Boise, ID 83705. *Frozen foods (except meats, meat products, packinghouse products and commodities used by packing houses) and potato products (except frozen and except in bulk),* from Aberdeen, Boise, Borah, Burley, Caldwell, Fruitland, Heyburn, Idaho Falls, and Nampa, ID; Hermiston, Hinkle and Ontario, OR; and Othello and Walla Walla, WA to points in MI, for 180 days. An underlying ETA seeks 90 days authority. Supporting Shipper(s): J. R. Simplot Co., One Capital Center, Boise, ID 83702; Chef-Reddy Corporation, Broadway & Lee Sts., Othello, WA 99344; Ore-Ida Foods, Inc., P.O. Box 10, Boise, ID 83707; and W. H. Mosely Co., 700 W. Idaho, Boise, ID 83702. Send protests to: Barney L. Hardin, D/S, ICC, Suite 110, 1471 Shoreline Dr., Boise, ID 83706.

MC 141464 (Sub-3TA), filed January 15, 1979. Applicant: TOM SMITH TRUCKING CO., 2277 North Locust Street, Canby, OR 97013. Representative: Nick I. Goyak, 1 S.W. Columbia, Suite 555, Portland, OR 97013. *Contract carrier:* irregular routes: (1) *Potato Chips* in hermetically sealed cans, from the facilities of Western Crisp, Inc. at Portland, Oregon to Oakland, San Francisco, Los Angeles, and San Diego, CA and Phoenix, AZ; and (2) *Empty cans,* from Benecia, CA to the facilities of Western Crisp, Inc. at Portland, OR, for 180 days. An underlying ETA seeks 90 days authority. Supporting Shipper(s): Western Crisp, Inc., 2045 N.E. Union Avenue, Portland, OR 97212. Send protests to: A. E. Odoms, DS, ICC, 114 Pioneer Courthouse, Portland, OR 97204.

MC 142036 (Sub-1TA), filed January 8, 1979. Applicant: J. A. MODULAR HOMES, INC., 3400 Mt. View Drive, Anchorage, AK 99501. Representative: Robert L. Hartig, 717 K Street, Suite 201, Anchorage, AK 99501. (1) *Vehicles, namely, mobile homes, trailers, including boat trailers, with or without boats, all designed to be drawn by passenger vehicles in towaway service* and (2) *Houses, or buildings, prefabricated, setup or in setup sections, moving wheeled undercarriages, equipped with ball-hitch, pintle-hitch or drop-in connectors,* in towaway service, between all points in AK, restricted to shipments having a prior movement by water, for 180 days. Supporting Shipper(s): Timberland Homes, 7418 S. 212th, Kent, WA 98031; Boise Cascade Corporation, P.O. Box 7747, Boise, ID 83707; and Modular Pacific Corp., 4907 E. Marginal Way, Seattle, WA 98108. Send protests to: Hugh H. Chaffee, D/S, ICC, 858 Federal Bldg., Seattle, WA 98174.

MC 142207 (Sub-24TA), filed January 15, 1979. Applicant: BRANNAN SYSTEMS, INC., P.O. Box 29487, New Orleans, LA 70189. Representative: Bruce E. Mitchell, Fifth Floor, Lenox Towers South, 3390 Peachtree Road, Atlanta, GA 30326. *General commodities,* (with usual exceptions), *in containers or in trailers, and empty containers and chassis* between New Orleans, LA and Baton Rouge, LA, restricted to traffic having a prior or subsequent movement by water, for 180 days. Supporting Shipper(s): Biehl & Co., 416 Common Street, New Orleans, LA 70130. Send protests to: Connie A. Guillory, ICC, Bureau of Operations, T-9038 Federal Bldg., 701 Loyola Ave., New Orleans, LA 70113.

MC 142487 (Sub-2TA), filed January 9, 1979. Applicant: JOHN H. KOOY TRUCKING, INC., 3926 Shelby Road, Lynnwood, WA 98036. Representative: James T. Johnson, 1610 IBM Bldg., Seattle, WA 98101. *Sailboat spars and masts,* from Santa Ana and Huntington Beach, CA to Arlington, WA for 180 days. An underlying ETA seeks 90 days authority. Supporting Shipper(s): Bayliner Marine Corporation, P.O. Box 24467, Seattle, WA 98134 and Kenyon Marine, 2730 S. Main St., Santa Ana, CA 92707. Send protests to: Shirley M. Holmes, T/A, ICC, 858 Federal Bldg., Seattle, WA 98174.

MC 142694 (Sub-3TA), filed January 8, 1979. Applicant: JOSEPHINE V. CREAGER, d.b.a. Jack Creager Trucking, 3812 South 243rd, Kent, WA 98031. Representative: Henry C. Winters, 525 Evergreen Bldg., Renton, WA 98055. *Contract carrier,* irregular routes: *Wood shakes and shingles,* from points in Grays Harbor County, WA to points in CA in and south of San Bernardino, Kern and San Luis Obispo Counties, for the account of A. E. Erickson Enterprises, Inc. of Seattle, WA for 180 days. An underlying ETA seeks 90 days authority. Supporting Shipper(s): A. E. Enterprises, Inc., 1010 Bank of California Center, Seattle, WA 98164. Send protests to: Shirley M. Holmes, T/A, ICC, 858 Federal Bldg., Seattle, WA 98174.

MC 143002 (Sub-8TA), filed January 19, 1979. Applicant: C. D. B. INC., 5170 36th Street, S.E., Grand Rapids, MI 49508. Representative: Karl L. Gotting, 1200 Bank of Lansing Building, Lansing, MI 48933. *Contract carrier;* irregular routes: *Household and personal care products and materials and supplies used in the manufacture and distribution thereof,* between Ada, MI, on the one hand, and on the other, Seattle, WA and its commercial zone, for 180 days. Supporting Shipper(s): Amway Corporation, 7575 East Fulton Road, Ada, MI 49301. Send protests to: C. R. Flemming, Room 225 Federal Building, Lansing, MI 48933.

MC 143059 (Sub-43TA), filed January 9, 1979. Applicant: MERCER TRANSPORTATION CO., P.O. Box 35610, Louisville, KY 40232. Representative: John M. Nader, Attorney 1600 Citizens Plaza, Louisville, KY 40202. *Pipe, fittings, and accessories in connection therewith* from the facilities of Certainteed Products Corporation, Pipe and Plastics Group, at or near Shingle Springs, CA to points in the United States in and west of ND, SD, NE, KS, OK and TX, restricted to traffic originating at and destined to the named points, for 180 days. Supporting Shipper(s): James A. Moddison, Traffic Manager, Certainteed Corp., Pipe & Plastics Group, P.O. Box 386, Shingle Springs, CA 95682. Send protests to: Mrs. Linda H. Sypher, District Supervisor, Interstate Commerce Commission, Washington, DC 20423.

MC 143059 (Sub-52TA), filed January 25, 1979. Applicant: MERCER TRANSPORTATION CO., P.O. Box 35610, Louisville, KY 40232. Representative: John M. Nader, Attorney 1600 Citizens Plaza, Louisville, KY 40202. *Wrought steel pipe and pipe couplings,* between points in the U.S. (except AL and HI), restricted to the transportation of traffic originating at or destined to the facilities of Pine Pipe Supply, Inc., or the suppliers of Pine Pipe Supply, Inc., for 180 days. Supporting Shipper(s): Gary Lee Carr, Traffic Manager, Pine Pipe Supply, Inc., P.O. Box 480, Frankfort, KY 60423. Send protests to: Mrs. Linda H. Sypher, District Supervisor, Interstate Commerce Commission, 426 Post Office Building, Louisville, KY 40202.

MC 143267 (Sub-10TA), filed January 2, 1979. Applicant: WEAVER TRANSPORTATION CO., 5452 Oakdale Road, Smyrna, GA 30080. Representative: James L. Brazee, Jr., 3355 Lenox Road, No. 795, Atlanta, GA 30326. *Mortar and cement mixes, dry concrete mix (cement mix with sand and gravel and other ingredients), cement mortar mix, portland cement, fly ash (in bag form), fly ash cement and/or lime, sand, rock or stone, crushed, ground or natural, acrylic paints, masonry cement, either palletized or unpalletized in containers (glass, paper bags, paper board, fibre board, metal or plastic buckets) in mixed or solid truck loads* from the plantsite of Williams Brothers Concrete, Inc., located in Atlanta, Fulton County, GA to points in KY, for 180 days. An underlying ETA seeks 90 days authority. Supporting Shipper(s): Williams Brothers Concrete, Inc., 934 Glenwood Ave., SE., Atlanta, GA 30316. Send protests to: Sara K. Davis, T/A, Bureau of Operations, Interstate Commerce Commission, 1252 W. Peachtree St., NW., Rm. 300, Atlanta, GA 30309.

MC 145635 (Sub-1TA), filed January 8, 1979. Applicant: THOMAS R. REED, d.b.a. Randle Reed Trucking, Rt. 4, Box 50C, Louisville, MS 39339. Representative: Harold D. Miller, Jr., P.O. Box 22567, Jackson, MS 39205. *CONTRACT CARRIER:* irregular routes: *Brick and structural tile* between the facilities of Delta Brick & Tile Co., Inc., at or near Indianola, MS, on the one hand, and, on the other, points in AL, AR, FL, GA, KY, LA, MO, OK, TN and TX, for the account of Delta Brick & Tile Co., Inc., Indianola, MS, for 180 days. Supporting Shipper(s): Delta Brick & Tile Co., Inc., P.O. Box 539, Indianola, MS 38751. Send protest to: Alan Tarrant, D/S, ICC, Rm. 212, 145 E. Amite Bldg., Jackson, MS 39201.

MC 145974 (Sub-1TA), filed January 8, 1979. Applicant: HIDATCO, INC., P.O. Box 356, New Town, ND 58763. Representative: William L. Fairbank, 1980 Financial Center, Des Moines, IA 50309. *Contract carrier: irregular routes:* (1)(a) *Lumber and lumber products,* from ID, MT, OR and WA to points in ND and SD located in the Cheyenne River, Fort Berthold, Fort Totten, Lower Brule, Pine Ridge, Rosebud, Sisseton, Standing Rock and Turtle Mountain Indian Reservations, and (b) *Building materials* from Minneapolis and St. Paul, MN and points in their commercial zones, to the Indian Reservations in ND and SD named in Part (1)(a) above, under contract with Hidatco, Inc., New Town, ND; and (2) *Lumber and lumber products* from CA, OR, WA, ID and MT to Bismarck and Minot, ND, and to the facilities of Canton Redwood Yard, Minneapolis, MN, under contracts with Canton Lumber Sales, Canton

Redwood Sales, and Canton Redwood Yard, Minneapolis, MN, for 180 days. An underlying ETA seeks 90 days authority. Supporting Shipper(s): Canton Lumber Sales, 221 West 78th Street, Minneapolis, MN 55420; Canton Redwood Sales, 221 West 78th Street, Minneapolis, MN 55420; Canton Redwood Yard, 221 West 78th Street, Minneapolis, MN 55420; and Hidatco, Inc., Box 356, New Town, ND 58763. Send protests to: Ronald R. Mau, DS, ICC, Room 268 Fed. Bldg. & U.S. Post Office, 657 2nd Avenue North Fargo, ND 58102.

MC 145976 (Sub-1TA), filed January 8, 1979. Applicant: C & Y LEASING CORP., 475 Swingle Acres, Casper, WY 82601. Representative: Edward A. O'Donnell, 1004-29th Street Sioux City, IA 51104. *Machinery, equipment, materials, and supplies, and facilities used in or incidental to, or in connection with, the discovery, development, production, refining, manufacture, processing, storage, transmission and distribution of natural gas and petroleum and their products and by-products, electrical energy, ore, coal, geothermal and nuclear resources,* RESTRICTED against the transportation of complete drilling rigs, between points in CO, ID, MT, NE, NV, NM, ND, SD, WY & UT, for 180 days. An underlying ETA seeks 90 days authority. Supporting Shipper(s): There are nine shippers. Their statements may be examined at the office listed below and Headquarters. Send protests to: District Supervisor Paul A. Naugton, Interstate Commerce Commission, Rm 105 Federal Bldg. & Crt House, 111 South Wolcott, Casper, WY 82601.

MC 146001 (Sub-1TA), filed January 17, 1979. Applicant: BOB MARGOSIAN, d.b.a. BOB MARGOSIAN TRUCKING, 6885 Avenue 416, P.O. Box 395, Dinuba, CA 93618. Representative: William J. Monheim, P.O. Box 1756, Whittier, CA. 90609. *Alcoholic beverages,* from points in CA to Reno and Las Vegas, NV and points in their commercial zones as defined by the Commission, for 180 days. An underlying ETA seeks 90 days authority. Supporting Shipper(s): Foremost-McKesson, Inc., 1 Post Street, San Francisco, CA 94104. Send protests to: Irene Carlos, Transportation Assistant, Interstate Commerce Commission, Room 1321 Federal Building, 300 North Los Angeles Street, Los Angeles, CA 90012.

MC 146017 (Sub-1TA), filed January 12, 1979. Applicant: SMART FORWARDING AND DISTRIBUTION, INC., P.O. Box 3421, Hickory, NC 28601. Representative: George W. Clapp, PO Box 836, Taylors, SC 29687. *Furniture parts* from Los Angeles, CA, to points in AR, MI, MS, NC, PA, TN, TX and VA, for 180 days. An underlying ETA seeks 90 days authority. Supporting Shipper(s): American Caster Corporation, 141 W. Avenue 34, Los Angeles, CA 90031. Send protests to: Terrell Price, District Supervisor, 800 Briar Creek Rd-Rm CC516, Mart Office Building, Charlotte, NC 28205.

MC 146022, (Sub-1TA), filed January 16, 1979. Applicant: D&D NEWSPAPER DISTRIBUTORS, INC., 600 So. Park, P. O. Box #3, Effingham, IL 62401. Representative: Robert T. Lawley, Attorney, 300 Reisch Building, Springfield, IL 62701. Contract—irregular routes: *Insert cards, magazines, newspapers, and printed materials,* for the account of Petty Compay, Inc., from Effingham, Illinois, to points in CT, FL, IN, IA, KS, KY, NC, NH and WI., as a Contract Carrier, for 180 days. An underlying ETA seeks 90 days authority. Supporting Shipper(s): Petty Co., Inc., 420 Industrial Dr., Effingham, IL 62401. Send protests to: Charles D. Little, District Supervisor, Interstate Commerce Commission, 414 Leland Office Building, 527 East Capitol Avenue, Springfield, IL 62701.

MC 146145TA, filed January 17, 1979. Applicant: TOWER TRANSPORT, INC., 528 South Cumberland Avenue, Park Ridge, IL 60068. Representative: Edward G. Bazelon, 39 South LaSalle Street, Chicago, IL 60603. *Frozen foodstuffs,* (1) from the facilities of Continental Freezers of Illinois in Chicago, IL to points in CO, IL, IN, IA, KS, KY, MI, MN, MO, NE, ND, OH, SD and WI; and (2) from points in CO, IL, IN, IA, KS, KY, MI, MO, NE, ND, OH, SD and WI to the facilities of Continental Freezeers of Illinios in Chicago, IL, for 180 days. Supporting Shipper(s): Continental Freezers of Illinois, 4220 S. Kildare Blvd., Chicago, IL 60632. Send protests to: Lois M. Stahl, TA, ICC, 219 S. Dearborn Street, Room 1386, Chicago, IL 60604.

MC 145548 (Sub-2TA), filed January 8th, 1979. Applicant: COMMUNTY TRANSIT LINES, INC., 315 Howe Avenue, Passaic, NJ 07055. Representative: J. G. Dail, Jr., PO Box LL, McLean, VA 22101. Common regular route, *Passengers* and *their baggage* between the Livingston Mall at or near the intersection of NJ Hwy 510 also known as South Orange Ave and Walnut St Livingston, NJ and NY, NY serving no intermediate points. From Livingston Mall over NJ Hwy 510 to junction John F. Kennedy Pkwy, then South over John F. Kennedy Pkwy to junction NJ Hwy 24 in Summit, NJ, then over NJ Hwy 24 to junction Interstate Hwy 78 in Springfield, NJ, then over Interstate Hwy 78 to Junction Hwy 95 in Newark, NJ, then over Hwy 95 to junction Interstate Hwy 495 in Secaucus, NJ, then over Interstate Hwy 495 thru Lincoln Tunnel to NY, NY and return over same route, for 180 days. An underlying ETA seeks 90 days authority. Supporting Shipper(s): There are 14 supporting parties. Their statements may be examined at the office listed below and Headquarters. Send protests to: JOEL MORROWS, DS, ICC, 9 Clintion Street, Newark, NJ 07102.

By the Commission.

H. G. HOMME, Jr.,
*Secretary.*

[FR Doc. 79-4988 Filed 2-14-79; 8:45 am]

---

[7035-01-M]

[Notice No. 22]

## MOTOR CARRIER TEMPORARY AUTHORITY APPLICATIONS

FEBRUARY 10, 1979.

Important Notice: The following are notices of filing of applications for temporary authority under Section 210a(a) of the Interstate Commerce Act provided for under the provisions of 49 CFR 1131.3. These rules provide that an original and six (6) copies of protests to an application may be filed with the field official named in the FEDERAL REGISTER publication no later than the 15th calendar day after the date the notice of the filing of the application is published in the FEDERAL REGISTER. One copy of the protest must be served on the applicant, or its authorized representative, if any, and the protestant must certify that such service has been made. The protest must identify the operating authority upon which it is predicated, specifying the "MC" docket and "Sub" number and quoting the particular portion of authority upon which it relies. Also, the protestant shall specify the service it can and will provide and the amount and type of equipment it will make available for use in connection with the service contemplated by the TA application. The weight accorded a protest shall be governed by the completeness and pertinence of the protestant's information.

Except as otherwise specifically noted, each applicant states that there will be no significant effect on the quality of the human environment resulting from approval of its application.

A copy of the application is on file, and can be examined at the Office of the Secretary, Interstate Commerce Commission, Washington, D.C., and also in the ICC Field Office to which protests are to be transmitted.

NOTE.—All applications seek authority to operate as a common carrier over irregular routes except as otherwise noted.

MOTOR CARRIERS OF PROPERTY

MC 5470 (Sub-169TA), filed January 10, 1979. Applicant: TAJON, INC., R.D. 5, Mercer, PA 16137. Representative: Richard W. Sanguigni (same as applicant). *Potash muriate, potash sulphate and potassium nitrate,* in bulk, in dump vehicles from Baltimore, MD to points in DE, MJ, NY, OH, PA, VA and WV, for 180 days. An underlying ETA seeks 90 days authority. Supporting Shipper(s): H. J. Baker & Bro. Inc., 360 Lexington Avenue, New York, NY 10017. Send protests to: John J. England, District Supervisor, Interstate Commerce Commission, 2111 Federal Building, 1000 Liberty Ave., Pittsburgh, PA 15222.

MC 8535 (Sub-67TA), filed January 24, 1979. Applicant: GEORGE TRANSFER & RIGGING CO., INC., P.O. Box 500, Parkton, MD 21120. Representative: Charles J. McLaughlin (same address as applicant). *Iron and Steel Articles (except in dump vehicles)* (1) originating at the facilities of Bethlehem Steel Corporation at Lackawanna, NY to points in IL and IN, and (2) originating at the facilities of Bethlehem Steel Corporation at Burns Harbor, IN to points in KY, NY, OH and PA, for 180 days. An underlying ETA seeks 90 days authority. Supporting Shipper(s): W. R. Cunningham, Manager, Truck Transp., Bethlehem Steel Corporation, Bethlehem, PA 18016. Send protests to: William L. Hughes, District Supervisor, Interstate Commerce Commission, 1025 Federal Building, Baltimore, MD 21201.

MC 13900 (Sub-30TA), filed January 8, 1979. Applicant: MIDWEST HAULERS, INC., 228 Superior St., Toledo, OH 43604. Representative: T. C. Laney (same address as applicant). *General Commodities* when moving on bills of lading of freight forwarders except those of unusual value, classes A and B explosives, household goods as defined by the Commission, frozen foods, commodities requiring special equipment, and commodities in bulk. Between Washington, MO on the one hand and, on the other, Phoenix and Tucson, AZ; Fresno, Los Angeles, Oakland, Sacramento, San Diego, San Francisco, San Jose, and Stockton, CA; St. Louis, MO; Las Vegas and Reno, NV; and Salt Lake City, UT, for 180 days. An underlying ETA seeks 90 days authority. Supporting Shipper(s): Acme Fast Freight, Inc., 2335 New Hyde Park Rd., New Hyde Park, NY 11040. Send protests to: Interstate Commerce Commission, Room 313—Federal Office Bldg., 234 Summit St., Toledo, OH 43604.

MC 48221 (Sub-21TA), filed January 25, 1979. Applicant: W. N. MOREHOUSE TRUCK LINE, INC., 4010 Dahlman Avenue, Omaha, NE 68107. Representative: Richard E. Closner, Suite 610, 7171 Mercy Rd., Omaha, NE 68106. *Meats, meat products and meat by-products and articles distributed by meat packinghouses as described in Sections A and C of Appendix I to the report in Descriptions in Motor Carrier Certificates, 61 M.C.C. 209 and 766 (except hides and commodities in bulk),* from points in IA (except Glenwood and Sioux City) to Denver and Commerce City, CO, for 180 days. An underlying ETA seeks 90 days authority. Supporting Shipper(s): Farmland Foods, Inc., P.O. Box 403, Denison, IA 51442; Wilson Foods Corporation, 4545 Lincoln Blvd., Oklahoma City, OK 73105; and Cudahy Foods Co., 4801 Brighton Blvd., Denver, CO 80216. Send protests to: Carroll Russell, ICC, Suite 620, 110 No. 14th St., Omaha, NE 68102.

MC 112617 (Sub-421TA), filed January 25, 1979. Applicant: LIQUID TRANSPORTERS, INC., P.O. Box 21395, Louisville, KY 40221. Representative: Charles R. Dunford, (address as above). (1) Crude Light Oil of Coal Tar, in bulk, in tank vehicles, (2) Petroleum, petroleum products and petrochemicals, in bulk, in tank vehicles, (1) From Hamilton and Middletown, OH, to Catlettsburg (Leach), KY, (2) From Catlettsburg (Leach), KY, to points in IN and OH, for 180 days. Supporting Shipper(s): Emil M. Sturzenegger, Traffic Manager, Ashland Petroleum Co. (Div. of Ashland Oil, Inc.) P.O. Box 391, Ashland, KY 41101. Send protests to: Mrs. Linda H. Sypher, District Supervisor, Interstate Commerce Commission, 426 Post Office Building, Louisville, KY 40202.

MC 115826 (Sub-382TA), filed January 10, 1979. Applicant: W. J. DIGBY, INC., 6015 East 58th Avenue, Commerce City, CO 80022. Representative: Howard Gore (same address as applicant). *Foodstuffs,* (except in bulk) from Ontario and Buena Park, CA, for 180 days. An underlying ETA seeks 90 days authority. Supporting Shipper(s): Kraft, Inc., 500 Peshtigo Court, Chicago, IL, 60690. Send protests to: H. C. Ruoff, District Supervisor, 492 U.S. Customs House, 721 19th St., Denver, CO 80202.

MC 115841 (Sub-667TA), filed January 19, 1979. Applicant: COLONIAL REFRIGERATED TRANSPORTATION, INC., 9041 Executive Park Drive, Suite 110, Building 100, Knoxville, TN 37919. Representative: D. R. Beeler (same address as applicant). *Shortenings, oils and margarines (except in bulk)* from Ft. Worth, TX to points in CO and TN, for 180 days. An underlying ETA seeks 90 days authority. Supporting Shipper(s): Wilsey Foods, Inc., P.O. Box 1537, Ft. Worth, TX 76101. Send protests to: Glenda Kuss, TA, ICC, Suite A-422 U.S. Court House, 801 Broadway, Nashville, TN 37203.

MC 115841 (Sub-668TA), filed January 29, 1979. Applicant: COLONIAL REFRIGERATED TRANSPORTATION, INC., 9041 Executive Park Drive, Suite 110, Building 100, Knoxville, TN 37919. Representative: D. R. Beeler (same address as applicant). *Steel doors, steel door frames, & brass, bronze, copper or steel hardware,* from the facilities of The Ceco Corporation, located at or near Milan, TN, to points in the states of NC, SC, GA, FL, AL, MS, TN, and LA, for 180 days. Supporting Shipper(s): The Ceco Corporation, 5601 W. 26th Street, Chicago, IL 60650. Send protests to: Glenda Kuss, TA, ICC, Suite A-422 U.S. Court House, 801 Broadway, Nashville, TN 37203.

MC 115841 (Sub-669TA), filed January 31, 1979. Applicant: COLONIAL REFRIGERATED TRANSPORTATION, INC., 9041 Executive Park Drive, Suite 110, Building 100, Knoxville, TN 37919. Representative: D. R. Beeler (same address as applicant). *Chemicals, toilet preparations, personal care items, buffing and polishing compounds, and foodstuffs,* from (1) Melrose Park, IL, to Atlanta, GA; Sparks, NV; Dallas and Houston, TX; (2) From Atlanta, GA to Tampa and Orlando, FL; Richmond, VA; Laurel, MD, and Chicago, IL; (3) From Sparks, NV to Los Angeles, CA; Portland, OR; Seattle, WA; and Chicago, IL; (4) From Los Angeles, CA to Sparks, NV, for 180 days. An underlying ETA seeks 90 days authority. Supporting shipper(s): Alberto Culver, 2525 Armitage Avenue, Melrose Park, IL 60160. Send protests to: Glenda Kuss, TA, ICC, Suite A-422 U.S. Court House, 801 Broadway, Nashville, TN 37203.

MC 115841 (Sub-670TA), filed January 31, 1979. Applicant: COLONIAL REFRIGERATED TRANSPORTATION, INC., 9041 Executive Park Drive, Suite 110, Building 100, Knoxville, TN 37919. Representative: D. R. Beeler (same address as applicant). *Frozen foods* from points in FL to points in AL, DE, IL, IN, KY, MI, MS, NJ, NY, NC, OH, PA, TN, TX, VA, WV, and DC, for 180 days. An underlying ETA seeks 90 days authority. Supporting Shipper(s): There are 6 supporting shippers. Their statements may be examined at the office listed below and Headquarters. Send protests to: Glenda Kuss, TA, ICC, Suite A-422 U.S. Court House, 801 Broadway, Nashville, TN 37203.

MC 115931 (Sub-78TA), filed January 24, 1979. Applicant: BEE LINE TRANSPORTATION, INC., P.O. Box 3987, Missoula, MT. 59806. Representative: William Grimshaw (same address as applicant). *Lumber* and *lumber products* from points in ID,

OR, WA and MT to points in SD, MN, IA, IL, NE and WI, for 180 days. An underlying ETA seeks 90 days authority. Supporting Shipper(s): There are 9 supporting shippers. Their statements may be examined at the office listed below and Headquarters. Send protests to: Paul J. Labane, DS, ICC, 2602 First Avenue North, Billings, MT 59101.

MC 116371 (Sub-12TA), filed January 2, 1979. Applicant: LIQUID CARGO LINES LIMITED, P.O. Box 269, Clarkson, Ontario, Canada L5J 2Y4. Representative: John W. Ester, 100 West Long Lake Road, Suite 102, Bloomfield Hills, MI 48013. *Liquid commodities,* in bulk, in tank vehicles, from the facilities of Kraft, Inc., in Memphis, TN to ports of entry on the International Boundary Line between the United States and Canada on the Detroit and Niagara Rivers, restricted to traffic destined to points in the Provinces of Ontario and Quebec, Canada, for 180 days. An underlying ETA seeks 90 days authority. Supporting Shipper(s): Kraft, Inc., Box 398, Memphis, TN 38101. Send protests to: ICC, 910 Federal Building, 111 West Huron Street, Buffalo, NY 14202.

MC 117119 (Sub-715TA), filed January 17, 1979. Applicant: WILLIS SHAW FROZEN EXPRESS, INC., P.O. Box 188, Elm Springs, AR 72728. Representative: L. M. McLean (same as applicant). *Such merchandise as is dealt in by retail, discount, department and variety stores* (except in bulk and foodstuffs), from Dalton, GA to the facilities of Wal-Mart Stores, Inc. at Bentonville and Searcy, AR, for 180 days. An underlying ETA seeks 90 days authority. Supporting Shipper(s): Wal-Mart Stores, Inc., P.O. Box 116, Bentonville, AR 72712. Send protests to: William H. Land, Jr., District Supervisor, 3108 Federal Office Building, 700 West Capitol, Little Rock, AR 72201.

MC 118457 (Sub-20TA), filed January 4, 1979. Applicant: ROBBINS DISTRIBUTING CO., INC., 11104 West Becher Street, West Allis, WI 53227. Representative: David V. Purcell, 111 E. Wisconsin Avenue, Milwaukee, WI 53202. *Meats, meat products, meat byproducts, dairy products, and articles distributed by meat packinghouses as described in Section A, B, and C of Appendix I to the report in Descriptions in Motor Carrier Certificates,* 61 MCC 209 and 766, (except hides and commodities in bulk) when moving in vehicles equipped with mechanical refrigeration, from Blair, Green Bay, New London, Plymouth and Portage, WI to points in IL, IN, KY, the lower peninsula of MI, MO and OH, for 180 days. Restricted to the transportation of traffic originating at the named origins and destined to the named States. Supporting Shipper(s): Swift & Company, 115 W. Jackson Boulevard, Chicago, IL 60604. Borden Foods, 180 E. Broad Street, Columbus, OH 43215. Hillshire Farms Co., Div. of Consolidated Foods Corp., P.O. Box 227, New London, WI 54961. A.M.P.I., P.O. Box 455, New Ulm, MN 56073. Send protests to: Gail Daugherty, ICC, U.S. Federal Building and Courthouse, 517 East Wisconsin Avenue, Room 619, Milwaukee, WI 53202.

MC 119349 (Sub-11TA), filed January 16, 1979. Applicant: STARLING TRANSPORT LINES, INC. 3501 S. Federal Hwy., Fort Pierce, FL 33450. Representative: Harry C. Ames: Jr., 805 McLachlen Bank Bldg., 666 Eleventh St., N.W., Washington, D.C. 20001. *Household consumer products,* in containers, from Jamaica, NY to Chicago, IL, Dallas, TX, and Los Angeles, CA for 180 days. An underlying ETA seeks 90 days authority. Supporting Shipper(s): Knomark, Inc., 132-20 Merrick Blvd., Jamaica, NY 11434. Send protest to: Donna M. Jones, Transportation Assistant, Interstate Commerce Commission—BOp, Monterey Building, Suite 101, 8410 N.W. 53rd Terrace, Miami, FL 33166.

MC 119493 (Sub-253TA), filed January 5, 1979. Applicant: MONKEM COMPANY, INC., P.O. Box 1196, Joplin, MO 64801. Representative: Thomas D. Boone (Same as above). *Such commodities* as are dealt in or used by wholesale and retail discount or variety stores (except commodities in bulk), from AL, AZ, CA, CT, FL, GA, IA, IL, IN, MA, MS, MN, NC, NJ, NM, NY, OH, PA, SC, TX, VA, and WI to the facilities of Wal-Mart Stores, Inc., in AR, for 180 days. An underlying ETA seeks 90 days authority. SUPPORTING SHIPPER(S): Wal-Mart Stores, Inc., Bentonville, AR 72712. SEND PROTESTS TO: John V. Barry, Room 600, 911 Walnut, Kansas City, MO 64106.

MC 119789 (Sub-542TA), filed January 15, 1979. Applicant: CARAVAN REFRIGERATED CARGO, INC., P.O. Box 226188, Dallas, TX 75266. Representative: James K. Newbold, Jr., Address Same as Applicant. *(1) Cleaning, polishing, and waxing compounds, (2) Starch, (3) Air fresheners, and disinfectants, (4) Mops, dusters, waxers and brooms, (5) Plastic bags, and (6) diet and nutritional foods* (except frozen) From facilities of the Drackett Company at Dayton, OH to Dallas, Irving, and Lubbock, TX; Denver, CO; Salt Lake City, UT: La Mirado and Los Angeles, CA; Milwaukie, OR, Kansas City and St. Louis, MO; Atlanta, GA; and Jacksonville, FL for 180 days. Underlying ETA for 90 days. Supporting Shipper(s): The Drackett Company, 5020 Spring Grove Avenue, Cincinnati, OH. Send protests to: Opal M. Jones, Trans. Asst., Interstate Commerce Commission, 1100 Commerce Street, Room 13C12, Dallas, TX 75242.

MC 119988 (Sub-183TA), filed January 9, 1979. Applicant: GREAT WESTERN TRUCKING CO., INC., P.O. Box 1384, Lufkin, TX 75901. Representative: hugh T. Matthews, 2340 Fidelity Union Tower, Dallas, TX 75201. Common carrier over irregular routes. (1) *Plumbing fixtures and supplies* (2) *generators and engines combined* (3) *internal combustion engines and* (4) *materials, equipment and supplies used in the manufacture and distribution of the commodities named in (1)(2) and (3) above* from the facilities of Kohler Co. in Sheboygan County, WI to points in TX for 180 days. An underlying ETA seeks 90 days authority. Supporting Shipper(s): Kohler Company, P.O. Box A, Kohler, WI 53044, Send protest to: John F. Mensing, Interstate Commerce Commission, 8610 Federal Bldg., 515 Rusk Avenue, Houston, TX 77002.

MC 119988 (Sub-184TA), filed January 12, 1979. Applicant: GREAT WESTERN TRUCKING CO., INC., P.O. Box 1384, Lufkin, TX 75901. Representative: Paul D. Angenend, P.O. Box 2207, Austin, TX 78768. *Petroleum, petroleum products, vehicle body sealer and/or sound deadener compounds (except in bulk, in tank vehicles) and filters* from points in Warren County, MS to points in AR, CA, LA, TX and WI for 180 days. Restricted to shipments originating at the facilities of Quaker State Oil Refining Corporation located in Warren County, MS, for 180 days. Supporting Shipper(s): Quaker State Oil Refining Corp., P.O. Box 989, Oil City, PA 16301. Send protests to: John F. Mensing, Interstate Commerce Commission, 8610 Federal Bldg., 515 Rusk Avenue, Houston, TX 77002.

MC 121664 (Sub-50TA), filed January 24, 1979. Applicant: HORNADY TRUCK LINE, P.O. Box 846, Monroeville, AL 36460. Representative: W. E. Grant, 1702 First Avenue South, Birmingham, AL 35201. *Woodpulp* (except in bulk, in tank vehicles), from Monroe County, AL, to Mobile, AL, in interstate or foreign commerce, for 180 days. An underlying ETA seeks 90 days authority. Supporting Shipper(s): Alabama River Pulp Company, Inc., P.O. Box 628, Monroeville, AL 36460. Send protests to: Mable E. Holston, Transportation Asst., Bureau of Operation, ICC, Room 1616—2121 Building, Birmingham, AL 35203.

MC 121664 (Sub-51TA), filed January 24, 1979. Applicant: HORNADY TRUCK LINE, P.O. Box 846, Monroeville, AL 36460. Representative: W. E. Grant, 1702 First Avenue South, Birmingham, AL 35201. *Pallets and pallet*

*components,* from the facilities of Talladega Box and Lumber Company, Inc., near Talladega, AL, to points in MS, TN, GA, OH, IN, IL, MI, IA and KY, for 180 days. An underlying ETA seeks 90 days authority. Supporting Shipper(s): Talladega Box & Lumber Company, P.O. Box 557, Talladega, AL 35160. Send protests to: Mable E. Holston, Transportation Asst., Bureau of Operation, ICC, Room 1616—2121 Building, Birmingham, AL 35203.

MC 123255 (Sub-196TA), filed January 15, 1979. Applicant: B & L MOTOR FREIGHT, INC., 1984 Coffman Road, Newark, Ohio 43055. Representative: C. F. Schnee Jr., 1984 Coffman Road, Newark, Ohio 43055. *Aluminum articles* from Oswego, New York to points in IL, IN, MI, NJ, OH, PA, WV and those in WI on and south of U.S. Highway 10 for 180 days. Supporting Shipper(s): Alcan Aluminum Corporation, P.O. Box 6977, Cleveland, Ohio 44101. Send protests to: Frank L. Calvary, District Supervisor, Interstate Commerce Commission, 220 Federal Building and U.S. Courthouse, 85 Marconi Boulevard, Cleveland, Ohio 44101.

MC 123405 (Sub-62TA), filed January 5, 1979. Applicant: FOOD TRANSPORT, INC., RD #1, Thomasville, PA 17364. Representative: Christian V. Graf, Esquire, 407 North Front Street, Harrisburg, PA 17101. (1) *Petroleum, petroleum products, vehicle body sealer and/or sound deadener compounds, (except in bulk, in tank vehicles), and filters,* from points in Warren County, MS to points in AL, AZ, AR, CA, CO, CT, DE, FL, GA, KY, LA, MD, MA, NJ, NY, NM, NC, OH, OK, PA, RI, SC, TN, TX, VA, WV, and DC, (2) *Petroleum, petroleum products, vehicle body sealer and/or sound deadener compounds, filters, materials, supplies, and equipment* as are used in the manufacture, sale, and distribution of the commodities named in part (1) above, (except in bulk, in tank vehicles), from points in AL, GA, KY, OH, OK, PA, RI, SC, VA, and WV to points in Warren County, MS, restricted in parts (1) and (2) above to shipments originating at or destined to the facilities of Quaker State Oil Refining Corporation located in Warren County, MS, for 180 days. Supporting Shipper(s): Quaker State Oil Refining Corp., P.O. Box 989, Oil City, PA 16301. Send protests to: Charles F. Myers, District Supervisor, Interstate Commerce Commission, P.O. Box 869 Federal Square Station, 228 Walnut Street, Harrisburg, PA 17108.

MC 123819 (Sub-76TA), filed January 2, 1979. Applicant: ACE FREIGHT LINE, INC., 3359 Cazassa Road, P.O. Box 16589, Memphis, TN 38116. Representative: Bill R. Davis, Suite 101—Emerson Center, 2814 New Spring Road, Atlanta, GA 30339. *Malt beverages,* from Memphis, TN to Oxford, MS, for 180 days. An underlying ETA seeks 90 days authority. Supporting Shipper(s): Foster Beverage Co., Inc., P.O. Box 1572, Tupelo, MS 38801. Send protests to: Floyd A. Johnson, ICC, 100 North Main Building, Suite 2006, 100 North Main Street, Memphis, TN 38103.

MC 124078 (Sub-937TA), filed January 25, 1979. Applicant: SCHWERMAN TRUCKING CO., 611 South 28 St., Milwaukee, WI 53215. Representative; Richard H. Prevette (same as applicant). *Dry ammonium sulfate, in bulk, in tank vehicles,* from Burns Harbor, IN to Cudahy, WI, for 180 days. An underlying ETA seeks 90 days authority. Supporting shipper(s): Benlo Chemicals, Inc., 1907 S. 89th St., Milwaukee, WI 53227. Send protests to: Mrs. Gail Daugherty, Transportation Asst., Interstate Commerce Commission, Bureau of Operations, J. S. F. A. A. A. Building & Courthouse, 517 East Wisconsin Avenue, Room 619, Milwaukee, Wisconsin 53202.

MC 125368 (Sub-42TA), filed January 18, 1979. Applicant: CONTINENTAL COAST TRUCKING COMPANY, INC., P.O. Box 26, Holly Ridge, NC 28445. Representative: C. W. Fletcher (same as applicant). *Meats, meat products and supplies used in the manufacture of meat products* between the facilities of White Packing Company, King George, VA, on the one hand, and, on the other points in AL, CA, DC, GA, IL, IN, KY, MD, MI, NJ, NC, OH, PA, TN, and TX, for 180 days. An underlying ETA seeks 90 days authority. Supporting shipper(s): White Packing Company, Inc., P.O. Box 95, King George, VA 22485. Send protests to: Archie W. Andrews, District Supervisor, Interstate Commerce Commission, P.O. Box 26896, Raleigh, NC 27611.

MC 127042 (Sub-240TA), filed January 26, 1979. Applicant: HAGEN, INC., 3232 Highway 75 North, P.O. Box 98—Leeds Station, Sioux City, IA 51108. Representative: Robert G. Tessar (same address as above). *Meats, meat products, and meat by-products, and articles distributed by meat packinghouses as described in Sections A and C of Appendix I to the report in Descriptions in Motor Carrier Certificates, 61 M.C.C. 209 and 766 (except hides and commodities in bulk),* (1) from Council Bluffs, IA to points in CA, NV, OR, UT, and WA; (2) from Sioux Center, IA to points in CA; (3) from Sioux City, IA to points in AZ, CA, OR, UT, and WA; (4) from St. Paul, MN to points in CA; (5) from Omaha, NE to points in AZ, CA, NV, OR, UT, and WA; and (6) from Kenosha, WI to points in CA and CO, for 180 days. Underlying ETAs seek 90 days authority. Supporting Shipper(s): There are 19 statements in support attached to this application which may be examined at the ICC in Washington, D.C. or at the field office named below. Send protests to: Carroll Russell, ICC, Suite 620, 110 No. 14th St., Omaha, NE 68102.

MC 129387 (Sub-31TA), filed January 5, 1979. Applicant: PAYNE TRANSPORTATION, INC., P.O. Box 1271, Huron, SD 57350. Representative: Charles E. Dye (same as above). *Meat, meat products and meat by-products and articles distributed by meat packinghouses* as described in Sections A and C of Appendix I to the report in Descriptions in Motor Carrier Certificates, 61 M.C.C. 209 and 766 (except hides and commodities in bulk), from Omaha, NE and its commercial zone to points in AZ, CA, and NV, for 180 days. An underlying ETA seeks 90 days authority. Supporting Shipper(s): Dubuque Packing Co., P.O. Box 599, Dubuque, IA 52001. Send protests to: J. L. Hammond, ICC, Room 455, Federal Building, Pierre, SD 57501.

MC 13378 (Sub-9TA), filed January 10, 1979. Applicant: E-Z MESSENGER SERVICE, INC., 61 Voorhis Lane, Hackensack, NJ 07601. Representative: Thomas F. X. Foley, Esq., State Highway 34, Colts Neck, NJ 07722. *Contract carrier,* irregular routes, *Computer tapes,* between Suffern and Rye, NY, on the one hand, and, on the other, Mansfield, MA for 180 days restricted to transportation under a continuing contract or contracts with Avon Products, Inc. and limited to the transportation of consignments of these commodities weighing in the aggregate 1,000 pounds or less from one consignor to one consignee on any one day, for 180 days. An underlying ETA seeks 90 days authority. Supporting Shipper(s): Avon Products, Inc., Manager, Transportation, 9 West 57th Street, New York, NY 07470. Send protests to: Joel Morrows, DS, ICC, 9 Clinton Street, Room 618, Newark, NJ 07102.

MC 134405 (Sub-57TA), filed January 11, 1979. Applicant: BACON TRANSPORT COMPANY, P.O. Box 1134, Ardmore, OK 73401. Representative: Wilburn L. Williamson, Suite 615-East, The Oil Center, 2601 Northwest Expressway, Oklahoma City, OK 73112. *Liquified petroleum gas,* in bulk, in tank vehicles, from Tulsa and Blackwell, OK to Springdale and Berryville, AR, for 180 days. An underlying ETA seeks 90 days authority. Supporting Shipper(s): Texaco Inc., P.O. Box 52332, Houston, TX 77052. Send protests to: Connie Stanley, Transportation Assistant, Interstate Commerce Commission, Room 240, Old Post

Office & Court House Bldg., 215 N.W. 3rd, Oklahoma City, OK 73102.

MC 135598 (Sub-20TA), filed January 11, 1979. Applicant: SHARKEY TRANSPORTATION, INC., P.O. Box 3156, Quincy, IL 62301. Representative: Carl L. Steiner, Attorney, 39 South LaSalle Street, Chicago, IL 60603. *Wood store fixtures* from Quincy, Illinois to points in the United States (except Alaska and Hawaii), for 180 days. An underlying ETA seeks 90 days authority. Supporting Shipper(s): Huck Fixture Co., 1100 North 28th St., Quincy, IL 62301. Send protests to: Charles D. Little, District Supervisor, Interstate Commerce Commission, 414 Leland Office Building, 527 East Capitol Ave., Springfield, IL 62701.

MC 138875 (Sub-128TA), filed January 4, 1979. Applicant: SHOEMAKER TRUCKING CO., 11900 Franklin Road, Boise, ID 83705. Representative: F. L. Sigloh, 11900 Franklin Road, Boise, ID 83705. *Materials and supplies used in the manufacture of mobile homes, recreational vehicles and campers (except in bulk),* from Elkhart and Kokomo, IN to points in Ada and Canyon Counties, ID, restricted to traffic originating at and destined to named origins and destinations, for 180 days. An underlying ETA seeks 90 days authority. Supporting Shipper(s): James Trepanier, President, Suppliers Warehouse, Inc., 415 So. 6th, Boise, ID 83706. Send protests to: Barney L. Hardin, D/S, ICC, Suite 110, 1471 Shoreline Dr., Boise, ID 83706.

MC 138875 (Sub-130TA), filed January 10, 1979. Applicant: SHOEMAKER TRUCKING CO., 11900 Franklin Road, Boise, ID 83705. Representative: F. L. Sigloh, 11900 Franklin Road, Boise, ID 83705. *Plastic and metal containers (except in bulk),* from Portland, OR, Salt Lake City, UT, and points in CA to points in ID south of the southern boundary of Idaho County, for 180 days. An underlying ETA seeks 90 days authority. Supporting Shipper(s): James McCauley, Manager, Industrial Container & Supply Co., Route 2, Boise, ID 83702. Send protests to: Barney L. Hardin, D/S, ICC, Suite 110, 1471 Shoreline Dr., Boise, ID 83706.

MC 138882 (Sub-208TA), filed January 22, 1979. Applicant: WILEY SANDERS TRUCK LINES, INC., P.O. Box 707, Troy, AL 36018. Representative: George A. Olsen, P.O. Box 357, Gladstone, NJ 07934. *Packaging materials and equipment, materials and supplies used in the manufacture and sale of packaging materials,* (except commodities in bulk). Between the facilities of Ronnie Packaging Corp. located at South Plainfield, NJ and City of Industry, CA, on the one hand, and, on the other, Berkely, IL, Pawtucket, RI, Detroit, MI, Canton, OH, St. Louis, MO, Dillon, SC, Alexandria, VA, Rochester, Rome, NY, City of Industry, CA and South Plainfield, NJ, for 180 days. An underlying ETA seeks 90 days authority. Supporting Shipper(s): Ronnie Packaging, 4301 New Brunswick Ave, So., Plainfield, NJ 07080. Send protests to: Mabel E. Holston, Transportation Assistant, Bureau of Operation, ICC, Room 1616—2121 Building, Birmingham, AL 35203.

MC 138882 (Sub-209TA), filed January 26, 1979. Applicant: WILEY SANDERS TRUCK LINES, INC., P.O. Box Drawer 707, Troy, AL 36801. Representative: George A. Olsen, P.O. Box 357, Gladstone, NJ 07934. *Salt and salt products,* except in bulk, from Akron, OH, and St. Clair, MI, to points, in AL, FL, GA, KY, MS, NC, SC, and TN, for 180 days. Supporting Shipper(s): Diamond Crystal Salt Company, 916 So. Riverside Ave., St. Clair, MI 48079. Send protests to: Mabel E. Holston, Transportation Asst., Bureau of Operation, ICC, Room 1616—2121 Building, Birmingham, AL 35203.

MC 138882 (Sub-210TA), filed January 26, 1979. Applicant: WILEY SANDERS TRUCK LINES, INC., P.O. Box Drawer 707, Troy, AL 36081. Representative: William P. Jackson, Jr., P.O. Box 1240, Arlington, VA 22210. *Such merchandise as is dealt in by wholesale, retail, and chain grocery and feed business houses,* from the facilities of Ralston Purina Company, at or near Dunkirk, NY, to points in OH, PA and WV for 180 days. An underlying ETA seeks 90 days authority. Supporting Shipper(s): Ralston Purina Company, Checkerboard Square, St. Louis, MO 63188. Send protests to: Mabel Holston, Transportation Asst., Bureau of Operation, ICC, Room 1616—2121 Bldg., Birmingham, AL 35203.

MC 139482 (Sub-83TA), filed January 5, 1979. Applicant: NEW ULM FREIGHT LINES, INC., P.O. Box 877, New Ulm, MN 56073. Representative: James E. Ballenthin, 630 Osborn Building, St. Paul, MN 55102. *General commodities* (except commodities in bulk), from New York, NY and North Bergan, NJ, to the facilities of Allied Stores Marketing Corporation located at Dallas, Houston and San Antonio, TX, for 180 days. An underlying ETA seeks 90 days authority. SUPPORTING SHIPPER(S): Allied Stores Marketing Corporation, 1114 Avenue of the Americas, New York, NY 10036. SEND PROTESTS TO: Delores A. Poe, ICC, 414 Federal Building & U.S. Court House, 110 South 4th Street, Minneapolis, MN 55401.

MC 139973 (Sub-57TA), filed January 4, 1979. Applicant: J. H. WARE TRUCKING, INC., 909 Brown Street (P.O. Box 398), Fulton, MO 65251. Representative: Larry D. Knox, 600 Hubbell Building, Des Moines, IA 50309. (1) *Petroleum, petroleum products, vehicle body sealer and/or sound deadener compounds,* (except in bulk, in tank vehicles), and filters, from points in Warren County, MS to points in CO, IA, IL, IN, KS, MN, MO, NE, OH, OK, and WI. (2) *petroleum, petroleum products,* vehicle body sealer and/or sound deadener compounds, filters, materials, supplies, and equipment as are used in the manufacture, sale, and distribution of the commodities named in part (1) above, (except in bulk, in tank vehicles), from points in IL, IN, OH, and OK to points in Warren County, MS, for 180 days. Restricted in Parts (1) and (2) above to shipments originating at or destined to the facilities of Quaker State Oil Refining Corporation located in Warren County, MS. SUPPORTING SHIPPER(S): Quaker State Oil Refining Corp., P.O. Box 989, Oil City, PA 16301. SEND PROTESTS TO: Vernon V. Coble, ICC, 600 Federal Building, 911 Walnut Street, Kansas City, MO 64106.

MC 140717 (Sub-11TA), filed January 22, 1979. Applicant: JULIAN MARTIN, INC., P.O. Box 3348, Batesville, AR 72501. Representative: Theodore Polydoroff, Suite 301, 1307 Dolley Madison Boulevard, McLean, VA 22101. *Contract carrier*—irregular routes: *Meats, meat products and articles distributed by packing house products as described in the Descriptions Case, 61 M.C.C. 209 and 766 (except hides and commodities in bulk),* from the facilities of Swift & Co. at Rochelle and St. Charles, IL; Glenwood, Des Moines, Marshalltown and Sioux City, IA; and Grand Island, NE to points in CA, AZ, UT, OR, WA and NV, under a continuing contract with Swift & Co. of Chicago, IL, for 180 days. An underlying ETA seeks 90 days authority. Supporting shipper(s): Swift & Company, 115 W. Jackson Blvd., Chicago, IL 60604. Send protests to: William H. Land, Jr., District Supervisor, 3108 Federal Office Building, 700 West Capitol, Little Rock, AR 72201.

MC 142181 (Sub-2TA), filed January 12, 1979. Applicant: LIBERTY CONTRACT CARRIER, INC., P.O. Box 1104, Nashville, TN 37202. Representative: Robert L. Baker, 618 United American Bank Bldg., Nashville, TN 37219. *Contract carrier*—irregular routes: (1) *Foodstuffs and* (2) *commodities used in the manufacture and distribution of foodstuffs,* between the facilities of Ragu Foods, Inc. at or near Owensboro and Henderson, KY and Evansville, IN, on the one hand, and, on the other, points in AL, AR, GA, LA, MS, SC and TN for 180 days.

An underlying ETA seeks 90 days authority. Supporting shipper(s): Ragu Foods, Inc., 33 Benedict Place, Greenwich, CT 06830. Send protests to: Glenda Kuss, TA, ICC, Suite A-422 U.S. Courthouse, 801 Broadway, Nashville, TN 37203.

MC 142559 (Sub-87TA), filed January 22, 1979. Applicant: BROOKS TRANSPORTATION, INC., 3830 Kelley Avenue, Cleveland, OH 44114. Representative: John P. McMahon, Esquire, George Greek, King, McMahon & McConnaughey, 100 East Broad Street, Columbus, OH 43215. *Refrigerators, freezers, water coolers, dishwashers, disposers, room air conditioners, dehumidifiers, humidifiers, other household appliances,* and *materials* and *supplies* used in the manufacture and distribution thereof (except commodites in bulk), between Edison, NJ, on the one hand, and, on the other, points in the states of OH, IN, IL, MI and GA, for 180 days. Supporting shipper(s): White Westinghouse Corp., 930 Ft. Duquesne, Pittsburgh, PA. Send protests to: Mary A. Wehner, District Supervisor, Interstate Commerce Commission, 1240 E. Ninth Street, Cleveland, OH 44199.

MC 142559 (Sub-88TA), filed January 11, 1979. Applicant: BROOKS TRANSPORTATION, INC., 3830 Kelley Avenue, Cleveland, OH 44114. Representative: John P. McMahon, 100 E. Broad Street, Columbus, OH 43215. *Carpet, carpet cushions, carpet underlay, and adhesives, solvents, and other materials used in the manufacture, sale, distribution and installation thereof (except commodities in bulk)* (A) from the facilities of General Felt Industries, Inc., at or near Philadelphia, PA, and Trenton, NJ, to points in AL, FL, GA, IL, IN, KY, MI, MN, MS, NC, OH, SC, TN and WI; (B) from the facilities of General Felt Industries, Inc., at or near Columbus, MS, to points in IL, IN, KY, MI, MN, MO, NJ, NY, OH, PA, TN and WI; (C) from the facilities of General Felt Industries, Inc., at or near Shelbyville, TN, to points in IL, IN, KY, MI, MO, MN, NJ, NY, OH, PA and WI for 180 days. Supporting shipper(s): General Felt Industries, Inc., Park 80 Plaza West-One, Saddle Brook, NJ 07662. Send protests to: Mary A. Wehner, District Supervisor, Interstate Commerce Commission, 731 Federal Office Building, Cleveland, OH 44199.

MC 142559 (Sub-89TA), filed January 23, 1979. Applicant: BROOKS TRANSPORTATION, 3830 Kelley Avenue, Cleveland, OH 44114. Representative: John P. McMahon, Esq., 100 East Broad Street, Columbus, OH 43215. *Household appliances, and equipment, materials and supplies* used in the manufacture and distribution of household appliances (except commodities in bulk) between Decatur, AL, on the one hand, and, on the other, points in the U.S. (except AK and HI) for 180 days. An underlying ETA for 90 days has been sought. Supporting Shipper(s): General Electric Co., Appliance Park, Louisville, KY 40225. Send protests to: Mary A. Wehner, District Supervisor, Interstate Commerce Commission, 1240 E. Ninth Street, Cleveland, OH 44199.

MC 142941 (Sub-30TA), filed January 18, 1979. Applicant: SCARBOROUGH TRUCK LINES, INC., 1313 North 25th Avenue, Phoenix, AZ 85009. Representative: Doug W. Sinclair (same address as applicant). *Meat, Meat products, Meat-by products and articles distributed by meat packing houses* as described in Sections A & C of Appendix I to the report in descriptions in Motor Carrier Certificates: 61, M.C.C. 209 and 766 (except hides and commodities in bulk), from the facilities utilized by John Morrell & Company at or near Estherville and Sioux City, IA and Worthington, MN to points in CA, for 180 days. Supporting Shipper(s): John Morrell & Co., 208 S. LaSalle St., Chicago, IL 60604. Send protests to: Thomas E. Klobas, Acting District Supervisor, Interstate Commerce Commission, 2020 Federal Building, 230 North First Avenue, Phoenix, AZ 85025.

MC 142941 (Sub-31TA), filed January 22, 1979. Applicant: SCARBOROUGH TRUCK LINES, INC., 1313 North 25th Avenue, Phoenix, AZ 85009. Representative: Doug W. Sinclair (same as applicant). *Ground Grain Sorghum* (except in bulk), from the facilities of Progressive Grain Processing Corporation at or near Lubbock, TX to points in the US (except AK and HI), for 180 days. Supporting Shipper(s): Progressive Grain Processing Corp., P.O. Box 3520, Lubbock, TX 79452. Send protests to: Thomas E. Klobas, ADS, Interstate Commerce Commission, 2020 Federal Building, 230 North First Avenue, Phoenix, AZ 85025.

MC 143607 (Sub-7TA), filed January 16, 1979 Applicant: BAYWOOD TRANSPORT, INC., P.O. BOX 2611, Waco, TX 76706. Representative: A. C. Horne, 2611 University Parks Drive, Waco, TX 76706. *Contract carrier*—irregular routes: *Chemicals (except in bulk),* from points in MO, IL, DE, NJ, WY, IN, MS, CA, OH, NC, KS, TN, MD, MA, AL, WV, MI, PA, WI, VA, NM, AR, and NY, to San Antonio, Houston, and Arlington, TX, for 180 days. An underlying ETA seeks 90 days authority. Supporting Shipper(s): Accron Chemical Distr. (Houston, San Antonio, Inc.), 4700 Blaffer, Houston, TX 77026. Send protests to: Martha A. Powell, Transportation Assistant, INterstate Commerce Commission, Room 9A27 Federal Building, 819 Taylor Street, Forth Worth, TX 76102.

MC 143701 (Sub-6TA), filed January 25, 1979. Applicant: WILLIAM OBERSTE, INC., 628 Walnut, Blue Springs, MO 64015. Representative: Lester C. Arvin, 814 Century Plaza Building, Wichita, KS 67202. *Plastic materials and articles* used in the manufacture thereof, from Houston, TX and Baton Rouge, Marksville, and Lake Charles, LA to AL, FL, GA, IL, KY, MN, NC, OH, PA, SC, TN, VA, WI, and WV, for 180 days. Supporting Shipper(s): Southern Petro Chemica., Inc., 799 Delk Road, Marietta, GA 30067; Jenre Plastics, P.O. Box 530, Marksville, LA 71315. Send protests to: Vernon V. Coble, DS, ICC, 600 Federal Bldg., 911 Walnut Street, Kansas City, MO 64106.

MC 143794 (Sub-11TA), filed January 15, 1979. Applicant: EAST-WEST MOTOR FREIGHT, INC., P.O. Box 525, Selmer, TN 38375. Representative: Bruce E. Mitchell, 5th Floor, Lenox Towers South, 3390 Peachtree Road, Atlanta, GA 30326. *Contract carrier:* irregular routes *General Commodities* (except commodities in bulk an commodities which because of size and weight require the use of special equipment) from the facilities of ITT Grinnell Corporation at or near Clito, GA; Princeton, KY; Elmira, NY; Columbia, PA and Henderson, TN to points in AZ, CA, CO, NM, NV, OR, TX, UT and WA, under contract with ITT Grinnell Corporation, for 180 days. Supporting Shipper(s): ITT Grinnell Corp., 260 West Exchange Street, Providence, RI 02901. Send protests to: Floyd A. Johnson, District Supervisor, Interstate Commerce Commission, 100 North Main Building—Suite 2006, 100 North Main Street, Memphis, TN 38103.

MC 145019 (Sub-1TA), filed January 25, 1979. Applicant: ST. PETERS TRANSPORTATION CO., INC., 14 Heather Drive, St. Peters, MO 63376. Representative: David L. Pentland, 4952 McPherson, St. Louis, MO 63108. *General Commodities,* usual exceptions, between O'Fallon, St. Peters, St. Charles on the one hand and on the other points in the City of St. Louis and commercial zones, for 180 days. An underlying ETA seeks 90 days authority. Supporting Shipper(s): Diversified Creations, Hoodco Park, St. Peters, MO. Send protests to: Peter E. Binder, ADS, ICC, Room 1465, 210 N. 12th St., St. Louis, MO 63101.

MC 145041 (Sub-4TA), filed January 23, 1979. Applicant: INTERMOUNTAIN TRANSPORT, INC., 1940 W. Pacific Coast Hwy, Long Beach, CA 90810. Representative: Milton W. Flack, 4311 Wilshire Blvd., Suite 300, Los Angeles, CA 90010. *Used railroad cross ties, utility and power poles, and*

*cross arms,* (1) from points in TX, NM, AZ and NV to points in CA; and (2) from points in TX, NM and NV to the facilities of Corral Industries, Incorporated, located at or near Phoenix and Tucson, AZ, for 180 days. An underlying ETA seeks up to 90 days authority. Supporting Shipper(s): Corral Industries, Inc., 5202 E. Washington, Phoenix, AZ 85034. Send protests to: Irene Carlos, Transportation Assistant, Interstate Commerce Commission, Room 1321 Federal Building, 300 North Los Angeles Street, Los Angeles, CA 90012.

MC 145102 (Sub-5TA), filed January 15, 1979. Applicant: FREYMILLER TRUCKING, INC., P.O. Box 138, Shullsburg, WI 53586. Representative: Mark C. Ellison, 1200 Gas Light Tower, 235 Peachtree St., NE, Atlanta, GA 30303. *Meat, meat products, meat by-products and articles distributed by meat packinghouses as described in Sections A & C of Appendix I to the report in Descriptions in Motor Carrier Certificate 61, M.C.C. 209 and 766 (except hides and commodities in bulk),* from the facilities used by John Morrell & Co. at Sioux City, IA to points in CA, for 180 days. An underlying ETA seeks 90 days authority. Supporting Shipper(s): John Morrell & Co., 208 S. LaSalle St., Chicago, IL 60604. Send protest to: Gail Daugherty, Transportation Asst., Interstate Commerce Commission, Bureau of Operations, U.S. Federal Building and Courthouse, 517 East Wisconsin Avenue, Room 619, Milwaukee, WI 53202.

MC 145152 (Sub-32TA), filed January 19, 1979. Applicant: BIG THREE TRANSPORTATION, INC., P.O. Box 706, Springdale, AR 72764. Representative: Don Garrison, P.O. Box 159, Rogers, AR 72756. *Candy and Confectionery terms (except in bulk), dessert preparations, advertising and display materials, gum ball machines and stands* from the facilities of Leaf Confectionery, Inc., at or near Chicago, IL to Boston, MA; Baltimore, MD; Buffalo, Liverpool, Syracuse and New York, NY; Hershey, Pittsburgh and Philadelphia, PA; and DC, for 180 days. An underlying ETA seeks 90 days authority. Supporting Shipper(s): Leaf Confectionery, Inc., 1155 Cicero Avenue, Chicago, IL 60651. Send protests to: William H. Land, Jr., District Supervisor, 3108 Federal Office Building, 700 West Capitol, Little Rock, AR 72201.

MC 145152 (Sub-33TA), filed January 23, 1979. Applicant: BIG THREE TRANSPORTATION, INC., P.O. Box 706, Springdale, AR 72764. Representative: Don Garrison, P.O. Box 159, Rogers, AR 72756. (1) *Electrical appliances, equipment and parts,* as defined by the Commission in Descriptions in Motor Carrier Certificates, 61 M.C.C. 283, Appendix VII, and *materials used in the manufacture thereof* (except in bulk), from the facilities of Gibson-Metalux Corporation, at or near Americus, GA, to points in AL, AR, AZ, CA, CO, FL, ID, NM, NV, OR, UT, and WA, and (2) *Materials, equipment and supplies used in the manufacture of the commodities named in (1),* from points in CA, IL, MI, MS, NC, NY, OH, OR, TX and WA, to the faciliteis of Gibson-Metalux Corporation at or near Americus, GA, for 180 days. Supporting Shipper(s): Gibson-Metalux Corp., P.O. Box 1207, Americus, GA 31709. Send protests to: William H. Land, Jr., District Supervisor, 3108 Federal Office Building, 700 West Capitol, Little Rock, AR 72201.

MC 145152 (Sub-34TA), filed January 26, 1979. Applicant: BIG THREE TRANSPORTATION, INC., P.O. Box 706, Springdale, AR 72764. Representative: Don Garrison, P.O. Box 159, Rogers, AR 72756. (1) *Rubber and plastic articles and rubber and plastic articles combined;* and (2) *equipment, materials, and supplies* used in the manufacture and distribution of the commodities named in (1) (except in bulk), between the facilities of Entek Corporation, at or near Irving, TX on the one hand, and on the other, points in the United States (except AK and HI) for 180 days. Supporting Shipper(s): Entek Corp. of America, P.O. Box 61048, Dallas, TX 75261. Send protests to: William H. Land, Jr., District Supervisor, 3108 Federal Office Building, 700 West Capitol, Little Rock, AR 72201.

MC 145220 (Sub-5TA), filed January 11, 1979. Applicant: IREDELL MILK TRANSPORTATION, INC., Rt. 3, Box 368, Mooresville, NC 28115. Representative: George W. Clapp, P.O. Box 836, Taylors, SC 29687. *Soy sauce, in bulk, in tank vehicles* from Decatur, IL, Harbor Beach, MI and Middletown, NY to Cambridge, MD, for 180 days. An underlying ETA seeks 90 days authority. Supporting Shipper(s): RJR Foods, Inc., P.O. Box 3037, Winston-Salem, NC 27102. Send protests to: Terrell Price, District Supervisor, 800 Briar Creek Rd.—Rm. CC516, Mart Office Building, Charlotte, NC 28205.

MC 145420 (Sub-1TA), filed January 22, 1979. Applicant: FREE SPIRIT TRUCKING, INC., 824 O'Neal Lane, Henderson, TN 38340. Representative: R. Connor Wiggins, Jr., 100 North Main Building, Suite 909, Memphis, TN 38103. *Scrap metals* in dump vehicles (1) from the facilities of H. O. Forgy & Son, Inc. at Jackson, TN to Birmingham, Bessemer, Anniston and Sheffield, AL, and (2) from Sheffield, Russellville, Anniston and Birmingham, AL to the facilities of H. O. Forgy & Son, Inc. at Jackson, TN, for 180 days. An underlying ETA seeks 90 days authority. Supporting Shipper(s): H. O. Forgy & Son, Inc., P.O. Box 908, Jackson, TN 38301. Send protests to: Floyd A. Johnson, District Supervisor, Interstate Commerce Commission, 100 North Main Building—Suite 2006, 100 North Main Street, Memphis, TN 38103.

MC 145441 (Sub-15TA), filed January 25, 1979. Applicant: A.C.B. TRUCKING, INC., P.O. Box 5130, North Little Rock, AR 72119. Representative: E. Lewis Coffey (same as applicant). *Frozen foods* (except in bulk), from Connell, Quincy, Richland, and Walla Walla, WA; Hermiston and Weston, OR; and American Falls, ID to points in GA, IL, NY, MA, TX, NC, OH, KY, IA, TN, FL, PA, MD, KS, MO, WI, MI, VA, WV and IN, for 180 days. An underlying ETA seeks 90 days authority. Supporting Shipper(s): Lamb-Weston, Division Amfac Foods, Inc., 6600 S.W. Hampton Street, Portland, OR 97223. Send protests to: William H. Land, Jr., District Supervisor, 3108 Federal Office Building, 700 West Capitol, Little Rock, AR 72201.

MC 145971 (Sub-1TA), filed January 4, 1979. Applicant: J. J. SALINGER, INC., 3737 North Sixth Street, Harrisburg, PA 17110. Representative: Richard D. de Schweinitz, Esquire, 2320 North Second Street, Harrisburg, PA 17110. Wrecked and disabled motor vehicle and parts and equipment for *their repair, and replacement vehicle for said disabled vehicles* (except motor homes and except trailers designed to be drawn by passenger vehicles) by use of wrecker and towing equipment only, between points in Dauphin, Cumberland, York, Lebanon, Franklin and Lancaster Counties, PA, on the one hand and, on the other, points in CT, DE, DC, IL, IN, MD, MA, MI, NJ, NY, NC, OH, VA, WV, and WI, for 180 days. An underlying ETA seeks 90 days authority. Supporting Shipper(s): Carolina Freight Carrier Corp., 1 Carolina Way, Carlisle, PA 17013; Ryder Truck, Ryder Truck Rental and Leasing, Rear 854 S. 16th St., Harrisburg, PA 17104; Penske Leasing, 1407 Paxton Street, Harrisburg, PA 17104; Smith's Transfer Corp., 20001 Harrisburg Pike, Carlisle, PA 17013. Send protests to: Charles F. Myers, District Supervisor, Interstate Commerce Commission, P.O. Box 869 Federal Square Station, 228 Walnut Street, Harrisburg, PA 17108.

MC 146011 (Sub-1TA), filed January 12, 1979. Applicant: TRANT EQUIPMENT & SCRAPIRON, INC., Route 20, Brimfield, MA 01010. Representative: Carl Trant, Route 20, Palmer, MA 01069. *Scrap metal,* from MA to Providence, RI, for 180 days. An underlying ETA seeks 90 days authority. Supporting Shipper(s): P. L. Buxton Co., P.O. Box 6407, Providence, RI

02904. Send protests to: David M. Miller, District Supervisor, Interstate Commerce Commission, 436 Dwight Street, Room 338, Springfield, MA 01103.

MC 146020 (Sub-1TA), filed January 5, 1979. Applicant: STEVE PAPPAS, d.b.a. PAPPAS BUILDERS SUPPLY, 3475 South 200 West, Murray, UT 84115. Representative: Irene Warr, 430 Judge Building, Salt Lake City, UT 84111. *Contract carrier*—irregular routes: *Asbestos and asphalt roofing products, insulation, and vinyl building products* from Portland, OR, and Wilmington and Martinez, CA, to Salt Lake, Utah, and Weber Counties, UT, for the account of Bird & Son, Inc., for 180 days. An underlying ETA seeks 90 days authority. Supporting Shipper(s): Bird & Son, Inc., Washington Street, East Walpole, MA 02032. Send protests to: L. D. Helfer, DS, ICC, 5301 Federal Bldg., Salt Lake City, UT 84138.

MC 146050 (Sub-1TA), filed January 23, 1979. Applicant: ALPHA OMEGA TRANSPORT, INC., 2308 N. Tryon St., Charlotte, NC 28206. Representative: Eric Meierhoefer, Suite 423, 1511 K Street NW., Washington, DC 20005. *Hospital supplies, drugs, and health care products* except commodities in bulk) from the facilities of Abbott Laboratories, Inc. at or near Rocky Mount, NC and Altavista, VA to Toledo and Cincinnati, OH, Boston, MA, Pittsburgh, PA, Buffalo, NY, Jersey City, NJ, New Orleans, LA, Boise, ID, Seattle, WA and points in CA and TX and Chicago, IL and its commercial zone, for 180 days. An underlying ETA seeks 90 days authority. Supporting Shipper(s): Abbott Laboratories, Inc., 14th St. and Sheridan Rd., North Chicago, IL 60064. Send protests to: District Supervisor, Terrell Price, 800 Briar Creek Rd.—Rm CC516, Mart Office Building, Charlotte, NC 28205.

MC 146089 (Sub-1TA), filed January 22, 1979. Applicant: MOUNT ROYAL LIMITED, South Windsor Street, Box 566, South Royalton, VT 05068. Representative: James M. Burns, 1383 Main Street, Johnson's Bookstore Bldg, Suite 413, Springfield, MA 01103. *Contract carrier*—irregular routes: *Cheese and cheese products and equipment, materials and supplies used in the manufacture of cheese and cheese products,* between Hinesburg, VT, on the one hand and on the other, points in MA, CT, RI, NY PA, NJ, OH, IN, IL, MD, DE, DC, WV, VA, NC, SC, GA and FL, under continuing contract or contracts with Interantional Cheese Company, Inc., for 180 days. An underlying ETA seeks 90 days authority. Supporting Shipper(s): International Cheese Company, Inc., Hinesburg, VT 05461. Send protests to: ICC, P.O. Box 548, Montpelier, VT 05602.

By the Commission.

H. G. HOMME, Jr.,
*Secretary.*

[FR Doc. 79-4989 Filed 2-14-79; 8:45 am]

---

[7035-01-M]

[Volume No. 7]

PETITIONS, APPLICATIONS, FINANCE MATTERS (INCLUDING TEMPORARY AUTHORITIES), ALTERNATE ROUTE DEVIATIONS, AND INTRASTATE APPLICATIONS.

FEBRUARY 7, 1979.

PETITIONS FOR MODIFICATION, INTERPRETATION OR REINSTATEMENT OF OPERATING RIGHTS AUTHORITY

The following petitions seek modification or interpretation of existing operating rights authority, or reinstatement of terminated operating rights authority.

All pleadings and documents must clearly specify the suffix (e.g. M1 F, M2 F) numbers where the docket is so identified in this notice.

An original and one copy of protests to the granting of the requested authority must be filed with the Commission within 30 days after the date of this notice. Such protests shall comply with Special Rule 247(e) of the Commission's *General Rules of Practice* (49 CFR 1100.247)* and shall include a concise statement of protestant's interest in the proceeding and copies of its conflicting authorities. Verified statements in opposition should not be tendered at this time. A copy of the protest shall be served concurrently upon petitioner's representative, or petitioner if no representative is named.

MC 30319 (Sub-133(M1)F), (Notice of filing of petition to modify certificate) filed December 20, 1978. Petitioner: SOUTHERN PACIFIC TRANSPORT CO. OF TEXAS AND LOUISIANA, a corporation, P.O. Box 226187, Dallas, TX 75266. Representative: Lloyd M. Roach (same address as petitioner). Petitioner holds a motor *common carrier* certificate in MC 30319 (Sub-No. 133), issued November 17, 1977, authorizing transportation, over regular routes, of *general commodities* (except those of unusual value, classes A and B explosives, household goods as defined by the Commission, commodities in bulk, and those requiring special equipment), (1) between New Orleans, LA, and El Paso, TX, serving all intermediate points (except Addicks, Barker, Katy, John Sue, Brookshire, Sealy, Alleyton, Columbus, Weimar, Schulenburg, Seguin, Van Horn, Allamore, Crusher, and Eagle Flat, TX), from New Orleans over U.S. Hwy 90 to Van Horn, TX, then over U.S. Hwy 80 to El Paso, and return over the same route, (2)(a) between New Orleans, LA, and San Antonio, TX, serving all intermediate points (except Frenier, Sorrento, Gonzales, Prairieville, Baton Rouge, Port Allen, and Grosse Tete, LA, Fannett, Hampshire, Addicks, Barker, Katy, John Sue, Brookshire, Sealy, Alleyton, Columbus, Weimar, Schulenburg, and Seguin, TX), over Interstate Hwy 10, (b) between Van Horn, and El Paso, TX, serving all intermdiate points (except Allamore, Crusher, and Eagle Flat), and serving Van Horn for the purpose of joinder only, over U.S. Hwy 10, (3) between New Orleans and Iowa, LA, serving the intermediate points of Port Barre, Opelousas, and Eunice, from New Orleans over U.S. Hwy 61 to Baton Rouge, then over U.S. Hwy 190 to junction U.S. Hwy 165, then over U.S. Hwy 165 to Iowa, and return over the same route, (4) between Shreveport, LA and Corpus Christi, TX, serving all intermediate points (except McFaddin, Refugio, and Woodsboro, TX), from Shreveport over U.S. Hwy 171 to junction LA, Hwy 5, then over LA Hwy 5, to junction U.S. Hwy 84, at Logansport, LA, then over U.S. Hwy 84 to junction U.S. Hwy 59, at Teneha, TX, then over U.S. Hwy 59 to junction U.S. Hwy 77 near Victoria, TX, then over U.S. Hwy 77 to junction U.S. Hwy 181 at Sinton, TX, then over U.S. Hwy 181 to Corpus Christi, and return over the same route, (5) between Denison and Brownsville, TX, (a) serving all intermediate points between Denison and Dallas, (b) serving Waxahachie and Austin, TX, and (c) serving all intermediate points between San Antonio and Brownsville (except San Benito and Olmito), from Denison over U.S. Hwy 75 to junction Interstate Hwy 35E at Dallas, then over Interstate Hwy 35E to junction Interstate Hwy 35, then over Interstate Hwy 35 to junction U.S. Hwy 181 at San Antonio, then over U.S. Hwy 181 to junction TX Hwy 359 at Skidmore, then over TX Hwy 359 to Allice, then over U.S. Hwy 281 to junction TX Hwy 107 at Edinburg, then over TX Hwy 107 to junction U.S. Hwy 77 at Harlingen, then over U.S. Hwy 77 to Brownsville, and return over the same route, (6) between Port Arthur and Fort Worth, TX, serving all intermediate points (except Keltys, Pollok, Wells and Alto), from Port Arthur over U.S. Hwy 69 to junction U.S. Hwy 175 at Jacksonville, then over U.S. Hwy 175 to junction U.S. Hwy 80 at Dallas, then over U.S. Hwy 80 to Fort Worth,

* Copies of Special Rule 247 (as amended) can be obtained by writing to the Secretary, Interstate Commerce Commission, Washington, D.C. 20423.

and return over the same route, (7) between Dallas and Galveston, TX, serving all intermediate points between Dallas and Richland, and the intermediate points of Houston and Texas City, over U.S. Hwy 75 (also Interstate Hwy 45), (8) between Kerrville and Wharton, TX, serving all intermediate points, from Kerrville over TX Hwy 27 to junction U.S. Hwy 87, at Comfort, then over U.S. Hwy 87 to junction TX Hwy 35 at Port Lavaca, then over TX Hwy 35 to junction TX Farm-to-Market Road 1728, then over TX Farm-to-Market Road 1728 to junction TX Farm-to-Market Road 1301 at Boling, then over TX Farm-to-Market Road 1301 to Wharton, and return over the same route, (9) Between Fredericksburg, and Port Arthur, TX, serving all intermediate points (except Altair, Mendoza, Lockhart, and Winnie), from Fredericksburg over U.S. Hwy 290 to junction U.S. Hwy 183 at Austin, then over U.S. Hwy 183 to junction U.S. Hwy 90A Gonzales, then over U.S. Hwy 90A to junction Interstate Hwy 10 at Houston, then over Interstate Hwy 10 to junction TX Hwy 73, then over TX Hwy 73 to Port Arthur, and return over the same route, (10) between Houston and Llano, TX, serving all intermediate points, from Houston over U.S. Hwy 290 to junction U.S. Hwy 183, at Austin, then over U.S. Hwy 183 to junction TX Hwy 29, then over TX Hwy 29 to Llano, and return over the same route, (11) between Dallas and Paris, TX, serving all intermediate points (except those between Dallas and Greenville), from Dallas over U.S. Hwy 67 (also Interstate Hwy 30) to junction U.S. Hwy 69, then over U.S. Hwy 69 to junction TX Hwy 24 at Greenville, then over TX Hwy 24 to Paris, and return over the same route, (12) between Fort Worth, and Greenville, TX, serving all intermediate points, from Fort Worth over U.S. Hwy 287 to junction TX Hwy 34 at Ennis, then over TX Hwy 34 to Greenville, and return over the same route, (13) between Austin and Llano, TX, serving all intermediate points, over TX Hwy 71, (14) between junction TX Hwy 71 and U.S. Hwy 281 and Burnet, TX, serving all intermediate points, over U.S. Hwy 281, (15) between Marble Falls and Buchanan Dam, TX, serving all intermediate points, over TX Farm-to-Market Road 1431, (16) between Buchanan Dam and Llano, TX, serving all intermediate points, from Buchanan Dam over TX Hwy 261 to junction TX Farm-to-Market Road 2241, then over TX Farm-to-Market Road 2241 to Llano, and return over the same route, (17) between Corpus Christi and Alice, TX, serving no intermediate points, over TX Hwy 44, (18) between Sinton and Skidmore, TX, serving all intermediate points, over U.S. Hwy 181, (19) between Victoria and Beeville, TX, serving all intermediate points, over U.S. Hwy- 59, (20) between Goliad and Kenedy, TX, serving all intermediate points, from Goliad over TX Hwy 239 to junction TX Hwy 72, then over TX Hwy 72 to Kenedy, and return over the same route, (21) between Cuero and Kenedy, TX, serving all intermediate points, from Cuero over U.S. Hwy 183 to junction U.S. Hwy 87, then over U.S. Hwy 87 to junction TX Hwy 72, then over TX Hwy 72 to Kenedy, and return over the same route, (22) between Corsicana and Nacogdoches, TX, serving all intermediate points, from Corsicana over U.S. Hwy 287 to junction U.S. Hwy 84 at Palestine, then over U.S. Hwy 84 to junction TX Hwy 204 at Reklaw, then over TX Hwy 204 to junction U.S. Hwy 259, then over U.S. Hwy 259 to junction U.S. Hwy 59, then over U.S. Hwy 59 to Nacogdoches, and return over the same route, (23) between Jacksonville, TX, and the plant site of the Texas Power and Light Co., near Reklaw, TX, serving all intermediate points, from Jacksonville over U.S. Hwy 79 to junction TX Hwy 204, then over TX Hwy 204 to junction TX Farm-to-Market Road 839, then over TX Farm-to-Market Road 839 to the plant site of the Texas Power and Light Co., and return over the same route, (24) between Athens and Palestine, TX, serving all intermediate points, over TX Hwy 19, (25) between Montalba and Tennessee Colony, TX, serving all intermediate points, over TX Farm-to-Market Road 321, (26) between Richland and Hempstead, TX, serving all intermediate points, from Richland over TX Hwy 14 to junction TX Hwy 6 at Bremond, then over TX Hwy 6 to junction U.S Hwy 290 at Hempstead, and return over the same route, (27) between Brenham and North Zulch, TX, serving all intermediate points, from Brenham over TX Hwy 90 to junction TX Farm-to-Market Road 1696, then over TX Farm-to-Market Road 1696 to junction TX Farm-to-Market Road 39, then over TX Farm-to-Market Road 39 to North Zulch, and return over the same route, (28) between Victoria and La Grange, TX, serving all intermediate points (except Schulenburg), and serving La Grange for purposes of joinder only, over U.S. Hwy 77, (29) between Cuero and Hallettsville, TX, serving all intermediate points (except Yoakum and Sweet Home), over U.S. Hwy 77A, (30) between Yoakum and Madisonville, TX, serving all intermediate points (except Moulton and La Grange), and serving Yoakum and Madisonville for purposes of joinder only, from Yoakum over U.S. Hwy 77A to junction TX Hwy 95, then over TX Hwy 95 to junction TX Farm-to-Market Road 609 at Flatonia, then over TX Farm-to-Market Road 609 to junction TX Hwy 71, then over TX Hwy 71 to La Grange, then over U.S. Hwy 77 to junction TX Hwy 21 near Lincoln, then over TX Hwy 71 to Madisonville, and return over the same route, (31) between Flatonia and La Grange, TX, serving all intermediate points, and serving La Grange for purposes of joinder only, from Flatonia, over TX Farm-to-Market Road 154 to junction TX Hwy 71 at West Point, then over TX Hwy 71 to La Grange, and return over the same route, (32) between Giddings, TX, and junction TX Farm-to-Market Road 153 and U.S. Hwy 77 north of La Grange, TX, serving all intermediate points, from Giddings over TX Farm-to-Market Road 448 to junction TX Farm-to-Market Road 153 at Winchester, then over TX Farm-to-Market Road 153 to junction U.S. Hwy 77, and return over the same route, (33) between junction U.S. Hwy 77 and TX Hwy 21 (near Lincoln) and junction U.S. Hwy 290 and TX Hwy 21 (near Paige), serving all intermediate points, over TX Hwy 21, (34) between Navasota and College Station, TX, serving all intermediate points, from Navasota over TX Hwy 6 to junction TX Farm-to-Market Road 2154, then over TX Farm-to-Market Road 2154 to College Station, and return over the same route, (35) between junction TX Farm-to-Market Road 50 and TX Hwy 21 and Hearne, TX, serving all intermediate points, from junction TX Farm-to-Market Road 50 and TX Hwy 21 over TX Farm-to-Market Road 50 to junction U.S. Hwy 79, then over U.S. Hwy 79 to Hearne, and return over the same route, (36) between Bremond and Kosse, TX, serving all intermediate points, from Bremond, over TX Hwy 6 to junction TX Hwy 7 at Marlin, then over TX Hwy 7 to Kosse, and return over the same route, (37) between Rockport and Gregory, TX, serving all intermediate points, over TX Hwy 35, (38) between Aransas Pass and Gregory, TX, serving all intermediate points, over TX Farm-to-Market Road 632, (39) between Damon and Wallis, TX, serving all intermediate points (except Orchand), over TX Hwy 36, (40) between Boling, TX and the plant site of Freeport Sulphur Co., serving all intermediate points, from Boling over TX Hwy 442 to Needville, then over unnumbered county road to site of Freeport Sulphur Co., and return over the same route, (41) between Texas City, and Dayton, TX, serving all intermediate points, over TX Hwy 146, (42) between Houston, TX and junction TX Hwys 225 and 146, serving all intermediate points, over TX Hwy 225, (43) between Zavalla, TX and the Sam Rayburn Reservoir Spillway, serving all intermediate points, from Zavalla over TX Hwy

63 to junction TX Farm-to-Market Road 255, then over TX Farm-to-Market Road 255 to the Sam Rayburn Reservoir Spillway, and return over the same route, (44) between Zavalla, TX and the north side of Sam Rayburn Reservoir Bridge, serving all intermediate points, over TX Hwy 147, (45) between Kurten and Cross, TX, serving all intermediate points, over unnumbered county road, (46) between Bedias and Madisonville, TX, serving all intermediate points and serving Madisonville for purpose of joinder only, over TX Hwy 90, (47) between Howe and Tom Bean, TX, serving all intermediate points, over TX Farm-to-Market Road 902, (48) serving four plant sites of Trunk Line Gas Corp., as follows: (a) from Cypress, TX to such plant site near Cypress, over unnumbered county road, (b) from Kountze, TX to another such plant site over TX Hwy 326 and TX Farm-to-Market Road 770, (c) from Beeville, TX to another such plant site, over TX Hwy 202 and unnumbered county road, and (d) from Premont, TX to another such plant site, over U.S. Hwy 281 to junction TX Farm-to-Market Road 1538, then over TX Farm-to-Market Road 1538 to such plant site, and return over the same routes, respectively, serving no intermediate points, (49) between Wallis and Hungerford, TX, serving all intermediate points, over TX Hwy 60, (50) between Houston and Eagle Lake, TX, serving all intermediate points, over TX Farm-to-Market Road 1093, (51) between Altair and Columbus, TX, serving all intermediate points, and serving the termini for purposes of joinder only, over TX Hwy 71, (52) between Shepherd and Cold Spring, TX, serving all intermediate points, over TX Hwy 150, (53) between Edinburg, and McAllen, TX, serving all intermediate points, over TX Hwy 336, (54) (a) between Harlingen and Brownsville, TX, serving all intermediate points, from Harlingen over U.S. Hwy 77 to junction TX Hwy 345, then over TX Hwy 345 to Lantana, then over unnumbered county road to junction TX Farm-to-Market Road 803 then over TX Farm-to-Market Road 803 to junction TX Farm-to-Market Road 510, then over TX Farm-to-Market Road 510 to junction TX Farm-to-Market Road 1847, then over TX Farm-to-Market Road 1847 to Brownsville, and return over the same route, (b) between junction U.S. Hwy 77 and TX Farm-to-Market Road 511 and junction TX Farm-to-Market Road 511 and TX Farm-to-Market Road 1847, serving no intermediate points, and serving said junctions for the purpose of joinder only, as an alternate route for operating convenience, only, over TX Farm-to-Market Road 511, (c) between junction U.S. Hwy 77 and TX Hwy 100 and Los Fresnos, TX, serving no intermediate points, and serving said junctions for the purpose of joinder only, as an alternate route for operating convenience only, over TX Hwy 100, (d) between junction U.S. Hwy 77 and TX Farm-to-Market Road 510 and Lacoma, TX, serving no intermediate points, and serving said junction for the purpose of joinder only, as an alternate route for operating convenience only, over TX Farm-to-Market Road 510, (55) between Ennis and Waxahachie, TX, serving all intermediate points, from Ennis over unnumbered county road to Garrett, TX, then over TX Farm-to-Market Road 879 via Boyce to junction TX Farm-to-Market Road 878, then over TX Farm-to-Market Road 878 to Waxahachie, and return over the same route, (56) between Brackettville and Eagle Pass, TX, serving all intermediate points, from Brackettville over TX Hwy 131 to junction U.S. Hwy 277, then over U.S. Hwy 277 to Eagle Pass, and return over the same route, (57) between Alpine, and Marfa, TX, serving all intermediate points, from Alpine over TX Hwy 118 to Fort Davis, then over TX Hwy 17 to Marfa, and return over the same route, (58) betwen Orange and Echo, TX, serving all intermediate points, from Orange over TX Hwy 87 to junction TX Farm-to-Market Road 1134, then over TX Farm-to-Market Road 1134 to junction unnumbered county road, then over unnumbered county road to Echo, and return over the same route, (59) between New Iberia and Jeanerette, LA, serving all intermediate points, from New Iberia over LA Hwy 14 to junction LA Hwy 83, then over LA Hwy 83 to junction LA Hwy 85, then over LA Hwy 85 to Jeanerette, and return over the same route, (60) between Jeanerette and New Iberia, LA, serving all intermediate points, from Jeanerette over LA Hwy 673 via Patoutville, to junction LA Hwy 85, then over LA Hwy 85 to junction LA Hwy 674, then over La Hwy 674 to New Iberia, and return over the same route, (61) between Jeanerette, LA and junction LA Hwys 762 and 85, serving all intermediate points, over LA Hwy 85, (62) between Raceland and Bowie, LA, serving all intermediate points, from Raceland over LA Hwy 308 to junction LA Hwy 651, then over LA Hwy 651 to Bowie, and return over the same route, (63) between Abbeville and Alexandria, LA, serving all intermediate points, from Abbeville over U.S. Hwy 167 to junction LA Hwy 10, then over LA Hwy 10 to junction LA Hwy 182, then over LA Hwy 182 to junction LA Hwy 29, then over LA Hwy 29 to junction U.S. Hwy 71, then over U.S. Hwy 71 to Alexandria, and return over the same route, (64) between Bunkie and Krotz Springs, LA, serving no intermediate points, and serving Krotz Springs for the purpose of joinder only, over U.S. Hwy 71, (65) between Lebeau, and Beggs, LA, serving no intermediate points and serving Lebeau for the purpose of joinder only, over LA Hwy 10, (66) between New Iberia and Opelousas, LA, serving all intermediate points and the off-route point of Cecelia, LA, over LA Hwy 31, (67) between Leonville and Port Barre, LA, serving all intermediate points, over LA Hwy 103, (68) between LaFayette and Henderson Landing, LA, serving all intermediate points, from LaFayette over LA Hwy 94 to junction LA Hwy 347, then over LA Hwy 347 to Henderson Landing, and return over the same route, (69) between New Iberia and Avery Island, LA, serving all intermediate points, from New Iberia over LA Hwy 14 to junction LA Hwy 329, then over LA Hwy 329 to Avery, and return over the same route, (70) between Baldwin, LA and junction LA Hwys 83 and 85, serving all intermediate points, over LA Hwy 83, (71) between Gueydan and Midland, LA, serving all intermediate points, over LA Hwy 91, (72) between Cade and Maurice, LA, serving all intermediate points, over LA Hwy 92, (73) between Burke, and LaFayette, LA, serving all intermediate points, from Burke over U.S. Hwy 90 to junction LA Hwy 88, then over LA Hwy 88 to junction LA Hwy 89, then over LA Hwy 89 to LaFayette, and return over the same route, (74) between junction LA Hwys 14 and 13 (near Kaplan) and Eunice, LA, serving all intermediate points, over LA Hwy 13, (75) between junction LA Hwys 14 and 99 (east of Lake Charles) and Welsh, LA, serving all intermediate points, over LA Hwy 99, (76) between Lake Charles and De Ridder, LA, serving all intermediate points (except Ragley), over U.S. Hwy 171, (77) between Chacahoula, LA and the plant site of Shreveport Sulphur Co., serving all intermediate points, over LA Hwy 309, (78) between Centerville and Salt Point, LA, serving all intermediate points, over LA Hwy 317, (79) between junction LA Hwy 14 and unnumbered county road approximately 6 miles west of Lake Arthur and the plant site of Superior Oil Co., near Lowerey, LA, serving all intermediate points, over unnumbered county road, (80) between Lake Arthur and Jennings, LA, serving all intermediate points, over LA Hwy 26, (81) between Boutte, LA (on U.S. Hwy 90 west of New Orleans) and the Huey P. Long Bridge, serving all intermediate points, from Boutte over unnumbered hwy to Luling, then over LA Hwy 18 to the Huey P. Long Bridge, and return over the same route, (82) between Grand Isle and Glenwood, LA, serving all intermediate points, over LA Hwy 1, (83) between Raceland and Jay, LA, serv-

ing all intermediate points, from Raceland over U.S. Hwy 90 to junction LA Hwy 308, then over LA Hwy 308 to Jay, and return over the same route, (84) between Thibodaux and Theriot, LA, serving all intermediate points, from Thibodaux over LA Hwy 20 to junction LA Hwy 24, then over LA Hwy 24 to Houma, then over LA Hwy 315 to Theriot, and return over the same route, (85) between Schriever and Gibson, LA, serving all intermediate points, over LA Hwy 20, (86) between Houma, LA, and junction LA Hwys 57 and 56, serving all intermediate points, over LA Hwy 56, (87) between Houma and Cocodrie, LA, serving all intermediate points, over LA Hwy 56, (88) between junction LA Hwys 56 and 55 (southeast of Houma), and the terminus of LA Hwy 55, southeast of Chauvin, LA, serving all intermediate points, over LA Hwy 55, (89) between junction Interstate Hwy 10 and LA Hwy 91 and Eunice, LA, serving all intermediate points, over LA Hwy 91, (90) between Iota, and Maxie, LA, serving all intermediate points, over LA Hwy 98, (91) between Jacksonville and Palestine, TX, serving no intermediate points, over U.S. Hwy 79, (92) between McAllen and Harlingen, TX, serving no intermediate points, over U.S. Hwy 83, (93) between Dallas and Fort Worth, TX, serving all intermediate points, over Interstate Hwy 20, (94) between Orange and Port Arthur, TX, serving no intermediate points, over TX Hwy 87, (95) between Fredericksburg, and Comfort, TX, serving all intermediate points, over U.S. Hwy 87, (96) between Fredericksburg and Kerrville, TX, serving all intermediate points, over TX Hwy 16, (97) between junction TX Farm-to-Market Road 627 and TX Hwy 80 (approximately 7 miles north of Helena) and the plant site of Shell Oil Co., near Ecleto, TX, serving all intermediate points, over TX Farm-to-Market Road 627, (98) between Nixon and Karnes City, TX, serving all intermediate points, and the off-route point of Ecleto, TX, over TX Hwy 80, (99) between junction U.S. Hwy 90 and access road No. 359 (approximately 7 miles northwest of Del Rio, TX) and site of the Amistad Dam, serving all intermediate points, over access road No. 359, (100) between Falls City, TX, and the plant site of Susquehanna-Western, Inc., northeast of Campbellton, TX, serving all intermediate points, from Falls City over TX Farm-to-Market Road 791, to junction unnumbered hwy then over unnumbered hwy to the Uranium plant site of Susquehanna-Western, Inc., and return over the same route, (101) between junction TX Hwy 239 and TX Farm-to-Market Road 2443 (approximately 9 miles southeast of Kenedy) and Pettus, TX, serving all intermediate points, from junction TX Hwy 239 and TX Farm-to-Market Road 2443 over TX Farm-to-Market Road 2443 to junction TX Farm-to-Market Road 743, then over TX Farm-to-Market Road 743 to junction TX Farm-to-Market Road 623, then over TX Farm-to-Market Road 623 to Pettus, and return over the same route, (102) between Kaplan, LA and the site of Pan American Petroleum Corp. warehouse (approximately 25 miles east of Creole, LA), serving all intermediate points, from Kaplan over LA Hwy 35 to junction LA Hwy 82, them over LA Hwy 82 to the site of Pan American Warehouse, and return over the same route, (103) between Hempstead and Racoon Bend, TX, serving all intermediate points, from Hempstead over TX Hwy 159 to junction unnumbered hwy, then over unnumbered hwy to Racoon Bend (approximately 7 miles from Hempstead), and return over the same route, (104) between Austin, TX and the site of the Nike Missile Base (approximately 6 miles northwest of Austin), serving all intermediate points, from Austin over TX Farm-to-Market Road 2244 to junction unnumbered hwy, then over unnumbered hwy to the site of the Nike Missile Base, and return over the same route, (105) between Ausin, TX and the site of the Nike Missile Base (approximately 12 miles southeast of Austin), serving all intermediate points, from Austin over U.S. Hwy 183 to junction TX Farm-to-Market Road 812, then over TX Farm-to-Market Road 812 to junction unnumbered hwy, then over unnumbered hwy to the site of the Nike Missile Base, and return over the same route, (106) between Vidor and Orange, TX, serving all intermediate points, over TX Farm-to-Market Road 105, (107) between Port Arthur, TX and Cameron Meadows, LA, serving all intermediate points, from Port Arthur over TX Farm-to-Market Road 1900 to the TX-LA State line, then over LA Hwy 82 to Cameron Meadows, and return over the same route, (108) between Wortham, TX and the Gulf Pump Station plant site (approximately 5 miles east of Wortham), serving all intermediate points, over TX Farm-to-Market Road 27, (109) between Holly Beach, LA, and the plant site of the Magnolia Petroleum Co., at Cameron Meadows, LA, serving all intermediate points, over LA Hwy 82, (110) between Creole, LA, and the site of the Amoco Production Company warehouse (approximately 25 miles east of Creole), serving all intermediate points, over LA Hwy 82, (111) between Lake Charles and Cameron, LA, serving all intermediate points and the off-route points of Sweet Lake, Grand Lake, and the warehouse of Staolind Oil and Gas Co., near Calcasieu Lake and east of Cameron, from Lake Charles over LA Hwy 385 to junction LA Hwy 384, then over LA Hwy 384 to junction LA Hwy 27, then over LA Hwy 27 to Cameron, and return over the same route, (112) between Lake Charles and Cameron, LA, serving all intermediate points, from Lake Charles over U.S. Hwy 90 to junction LA Hwy 27, then over LA Hwy 27 to Cameron and return over the same route, (113) between Hockley, TX and the plant site of United Salt Corp., (approximately 4 miles from Hockley), serving all intermediate points, over unnumbered county road, (114) between junction LA Hwys 27 and 384 and Holmwood, LA, serving all intermediate points, over LA Hwy 27, (115) between New Iberia, and Lake Charles, LA, serving all intermediate points, over LA Hwy 14.

The authority granted herein is restricted against the transportation of traffic delivered to or received from connecting carriers at El Paso or points in its commercial zone as defined by the Commission (except originating at or destined to Castroville, TX, or applicant's authorized points of service west of Castroville). Conditions: (1) All contractural arrangements between Southern Pacific Transport Company of Texas and Louisiana and Southern Pacific Transportation Company or its corporate affiliates shall be reported to the Commission and shall be subject to such revision as the Commission may find to be necessary in order that such arrangements shall be fair and equitable to the parties. (2) At the close of each full year after the date of the issuance of the certificate herein, and for 5 consecutive years thereafter, carrier shall file with the Commission's Bureau of Ecomomics a "Performance Report" with respect to the operations conducted under the certificate issued herein; and that this "Performance Report" shall, among other things, (a) identify and describe the shipments handled under such certificate that moved between points in the authority granted herein, and (b) identify the locations at which carrier maintained terminals or agency stations during the preceding year and indicate any changes made during the year in the locations at which terminals or agency stations are maintained. (3) Such further terms, conditions, and limitations, as the Commission in the future may find necessary (a) to preserve intermodel competition, (b) to insure that carrier's operations conform to the type of service the supporting shippers are shown to require on this record. Petitioner seeks to delete restriction against the transportation of traffic delivered to or received from connecting carriers at El Paso or points in its commercial zone as defined by the Commission.

MC 110683 (MIF) notice of petition filed October 23, 1978, to delete liquor and tobacco restrictions contained in authority sought to be acquired by Smith's Transfer Corporation in Docket No. MC-F-13332. Petitioner: Smith's Transfer Corporation, Post Office Box 1000, Staunton, Virginia 24401. Representative, David G. Macdonald, 1000 Sixteenth St., N.W., Washington, D.C. 20036. This petition is directly related to Docket No. MC-F-13332, Smith's Transfer Corporation-Purchase (Portion)-Akers Motor Lines, inc., filed August 31, 1977, wherein authority is sought under section 5 of the Interstate Commerce Act for Smith's Transfer Corporation to purchase certain operating rights of Akers Motor Lines covered by certificates No. MC-72442 (Sub-Nos. 8, 13, 15, 18, 22, 23, 29, 31, and 41) and a portion of certifcates No. MC-72442 (sub-nos. 5, 7, and 19). Of the authority involved in proceeding No. MC-F-13332, the certificates, with the exception of sub-no. 41, contain a restriction against the transportation of tobacco and liquor. By this petition, Smith's Transfer Corporation seeks to delete the liquor and tobacco restrictions contained in the Akers authority so as to conform with Smith's existing authority. It is further requested that such deletion become effective upon approval by the Commission of transaction No. MC-F-13332 and concurrently with consummation of said transaction.

NOTE.—MC-F-13332 was published in the FEDERAL REGISTER issue of September 22, 1977.

MC 141114 (MIF) (notice of filing of petition to substitute contracting shipper) filed January 3, 1979. Petitioners: RETAILERS DELIVERY FACILITY CO., INC. (GARDEN MERCHANDISE & SUPPLY CO., INC. AND HARROUN LUMBER CORP.), P.O. Box 470, 1495 Holcomb Street, Watertown, NY. Representative: Robert D. Gunderman, 710 Statler Building, Buffalo, NY 14202. Retailers Delivery Facility Co., Inc. (RDF) holds contract carrier authority in Permit MC 141114, to transport Clay products, garden supplies, lawn ornaments, building materials, and garden trellises (except cement, chemicals, and commodities in bulk), from points in ME, NH, VT, MA, RI, CT, and that part of NY on and east of a line beginning at the mouth of the Hudson River, then extending north along the east bank of the Hudson River to Albany, NY, and then over US Hwy 9 to the United States-Canada Boundary line, to points in the United States in and east of MN, IA, MO, AR, and LA, restricted (a) against the transportation of the above-named commodities from points in CT, MA, NY, and RI to points in NC, SC, GA, and FL, and (2) against the transportation of clay products and refractories from points in NY to points in IN, MI, and OH. The operations are limited to a transportation service to be performed under a continuing contract, or contracts, with Garden Merchandise & Supply Co., Inc. (Garden)

By the instant petition, RDF seeks to substitute Harroun Lumber Corporation (Harroun) of Watertown, NY, as the contract shipper in Permit MC 141114 in lieu of Garden.

Harroun recently obtained control of both RDF and Garden by means of capital stock purchases. Subsequent to the purchase by Harroun of the stock of RDF and Garden, Garden was designated as sales agent or distributor for the merchandise dealt in by Harroun, which merchandise includes the commodities authorized to RDF under its permit. RDF has, pursuant to a contract between itself and Garden, transported the commodities authorized within the scope of the permit.

The Commission's Bureau of Investigations and Enforcement has questioned this operational arrangement. It is the Bureau's position that the operations conducted by RDF, ostensibly for Garden are unlawful because the operations are, in fact, being conducted for Harroun, a shipper not named in RDF's permit. The Bureau contends that the designation of Garden as a sales agent or distributor for Harroun constitutes a scheme to evade the licensing requirements of the Act as well as the terms of the permit in question. The Bureau takes no position with regard to the request to substitute Harroun for Garden as the contracting shipper, except to point out that such request is not based on a mere change of name of a shipper authorized to be served in the first instance.

## REPUBLICATIONS OF GRANTS OF OPERATING RIGHTS AUTHORITY PRIOR TO CERTIFICATION

The following grants of operating rights authorities are republished by order of the Commission to indicate a broadened grant of authority over that previously noticed in the FEDERAL REGISTER.

An original and one copy of a petition for leave to intervene in the proceeding must be filed with the Commission within 30 days after the date of this FEDERAL REGISTER notice. Such pleading shall comply with Special Rule 247(e) of the Commission's *General Rules of Practice* (49 CFR 1100.247) addressing specifically the issue(s) indicated as the purpose for republication, and including copies of intervenor's conflicting authorities and a concise statement of intervenor's interest in the proceeding setting forth in detail the precise manner in which it has been prejudiced by lack of notice of the authority granted. A copy of the pleading shall be served concurrently upon the carrier's representative, or carrier if no representative is named.

MC 93147 (Sub-3F) (Republication), filed April 3, 1978, published in the FEDERAL REGISTER issue of June 22, 1978, and republished this issue. Applicant: DELTA TRANSPORT CORP., 80 James Street, Jersey City NJ 07303. Representative: James E. Mahoney, 84 State Street, Boston, MA 02009. A Decision of the Commission, Review Board Number 1, decided January 10, 1979, and served January 24, 1979, finds that the present and future public convenience and necessity require operations by applicant in interstate or foreign commerce as a *common carrier*, by motor vehicle, over irregular routes, in the transportation of (1) *Bakery goods*, from the facilities of Sunshine Biscuits, Inc., at Freehold, NJ, and points in Middlesex County, NJ, to points in ME, NH, VT, and RI; and (2) *materials, supplies, and equipment used in the manufacture, distribution, and sale of bakery goods* (except commodities in bulk, in tank vehicles), from points in ME, NH, VT, and RI, to the facilities of Sunshine Biscuits, Inc., at Freehold, NJ, and points in Middlesex County, NJ, that applicant is fit, willing, and able properly to perform such service and to conform to the requirements of the Interstate Commerce Act and the Commission's rules and regulations. The purpose of this republication is to add Freehold, NJ as an origin point in part (1) above, and modify the territorial description in part (2) above.

MC 114273 (Sub-359F) (Republication), filed March 13, 1978, published in the FEDERAL REGISTER issue of April 27, 1978, and republished this issue. Applicant: CRST, INC., P.O. Box 68, Cedar Rapids, IA 52406. Representative: Kenneth L. Core (same address as applicant). A Decision of the Commission, Review Board Number 1, decided December 19, 1978, and served January 9, 1979, finds that the present and future public convenience and necessity require operations by applicant in interstate or foreign commerce as a *common carrier*, by motor vehicle, over irregular routes, in the transportation of *Meats, meat products, meat byproducts, and articles distributed by meat-packing houses*, as described in Sections A and C of Appendix I to the report in *Descriptions in Motor Carrier Certificates*, 61 M.C.C. 209 and 766 (except hides and commodities in bulk, in tank vehicles), from the facilities of Swift & Company, at Rochelle and St. Charles, IL, to points in OH, CT, DE, ME, MD, MA, NH, NJ, PA, RI, VT, VA, NY, WV, and the District of Columbia, restricted to the transportation of traffic originating at and des-

tined to the named points, that applicant is fit, willing, and able properly to perform such service and to conform to the requirements of the Interstate Commerce Act and the Commission's rules and regulations. The purpose of this republication is to indicate the addition of NY and WV as destination points, and the addition of a restriction.

MC 139495 (Sub-338F) (Republication), filed March 24, 1978, published in the FR issue of May 11, 1978, and republished this issue. Applicant: NATIONAL CARRIERS, INC., 1501 East 8th Street, P.O. Box 1358, Liberal, KS 67901. Representative: Herbert Alan Dubin, 1320 Fenwick Lane, Suite 500, Silver Spring, MD 20910. A Decision of the Commission, Review Board Number 3, decided December 4, 1978, and served January 24, 1979, finds that the present and future public convenience and necessity require operations by applicant in interstate or foreign commerce as a *common carrier*, by motor vehicle, over irregular routes, in the transportation of (1) *Textiles, rugs, carpets, and carpteing;* and (2) *materials and supplies* used in the installation of the foregoing commodities, from the facilities of Armstrong Cork Company, at or near Dalton and Ringgold, GA, and Winchester, TN, to points in AZ, CA, CO, ID, MT, NM, NV, OK, OR, TX, UT, WA, and WA, restricted to the transportation of traffic originating at the above-named facilities and destined to the named destination points, that applicant is fit, willing and able properly to perform such service and to conform to the requirements of the Interstate Commerce Act and the Commission's rules and regulations. The purpose of this republication is to modify the commodity description; add TX in lieu of TN as a destination point, and add a restriction.

## Motor Carrier, Broker, Water Carrier and Freight Forwarder Operating Rights Applications

The following applications are governed by Special Rule 247 of the Commission's General Rules of Practice (49 CFR 1100.247). These rules provide, among other things, that a protest to the granting of an application must be filed with the Commission within 30 days after the date of notice of filing of the application is published in the Federal Register. Failure to reasonably file a protest will be construed as a waiver of opposition and participation in the proceeding. A protest under these rules should comply with Section 247(e)(3) of the rules of practice which requires that it set forth specifically the grounds upon which it is made, contain a detailed statement of protestant's interest in the proceeding (including a copy of the specific portions of its authority which protestant believes to be in conflict with that sought in the application, and describing in detail the method—whether by joinder, interline, or other means—by which protestant would use such authority to provide all or part of the service proposed), and shall specify with particularity the facts, matters, and things relied upon, but shall not include issues or allegations phrased generally. Protests not in reasonable compliance with the requirements of the rules may be rejected.

The original and one copy of the protest shall be filed with the Commission, and a copy shall be served concurrently upon applicant's representative, or applicant if no representative is named. All pleadings and documents must clearly specify the "F" suffix where the docket is so identified in this notice. If the protest includes a request for oral hearing, such request shall meet the requirements of Section 247(e)(4) of the special rules, and shall include the certification required therein.

Section 247(f) further provides, in part, that an applicant who does not intend timely to prosecute its application shall promptly request dismissal thereof, and that failure to prosecute an application under procedures ordered by the Commission will result in dismissal of the application.

Further processing steps will be by Commission decision which will be served on each party of record. Broadening amendments will not be accepted after the date of this publication except for good cause shown, and restrictive amendments will not be entertained following publication in the Federal Register of a notice that the proceeding has been assigned for oral hearing.

Each applicant states that approval of its application will not significantly affect the quality of the human environment nor involve a major regulatory action under the Energy Policy and Conservation Act of 1975.

MC 15859 (Sub-10F) (correction), filed September 14, 1978, and previously noticed in the Federal Register issue of October 26, 1978. Applicant: THE HINE LINE, a corporation, 247 Emmet Street, Newark, NJ 07114. Representative: Alki E. Scopelitis, 1301 Merchants Plaza, Indianapolis, IN 46204. Authority sought to operate as a *common carrier*, by motor vehicle, in interstate or foreign commerce, over irregular routes, transporting: *Hides and pelts*, between points in GA, IL, IN, IA, KS, KY, MA, ME, MD, MI, MN, MO, MS, ND, NE, NH, NJ, NY, NC, OH, PA, SC, SD, TN, VA, VT, WV, and WI. Note: This republication shows NE as a destination. (Hearing: On May 1, 1979, at 9:30 a.m. local time, in Chicago, IL.) Applicant's verified statements due by April 16, 1979 and protestant's verified statements due by April 23, 1979.

MC 116200 (Sub-17F), filed January 20, 1979. Applicant: UNITED PARCEL SERVICE, INC., 888 Seventh Avenue, 15th Floor, New York, NY 10019. Representative: Everett Hutchinson, Suite 400, 1150 Connecticut Avenue, NW, Washington, DC 20036. Authority sought to operate as a *common carrier*, by motor vehicle, over irregular routes, in the transportation of *General commodities* (except those of unusual value, Classes A and B explosives, household goods as defined by the Commission, commodities in bulk, and commodities requiring special equipment), between points in CT, DE, MA, MD, ME, NH, NJ, NY, PA, RI, VA, VT, WV, and DC, and those points in OH within (10) miles of the OH-PA and the OH-WV State Boundary lines, subject to all the restrictions in applicant's certificates No. MC 116200 (Sub-Nos. 2, 3, and 5). Note: Applicant specifically requests that the named certificates be modified to expressly authorize tacking. Additional certificated operating rights are not sought by this request. (Hearing site: New York, NY.)

## Finance Applications

The following applications seek approval to consolidate, purchase, merge, lease operating rights and properties, or acquire control through ownership of stock, of rail carriers or motor carriers pursuant to Sections 11343 (formerly Section 5(2)) or 11349 (formerly Section 210a(b)) of the Interstate Commerce Act.

An original and one copy of protests against the granting of the requested authority must be filed with the Commission within 30 days after the date of this Federal Register notice. Such protest shall comply with Special Rules 240(c) or 240(d) of the Commission's *General Rules of Practice* (49 CFR 1100.240) and shall include a concise statement of protestant's interest in the proceeding. A copy of the protest shall be served concurrently upon applicant's representative, or applicant, if no representative is named.

Each applicant states that approval of its application will not significantly affect the quality of the human environment nor involve a major regulatory action under the Energy Policy and Conservation Act of 1975.

MC-F-13897F. Authority sought for purchase by FAIRBANKS EXPRESS, INC., North Hoosick Road, P.O. Box 232, Hoosick Falls, NY. 12090, of the operating rights of ERVING MOTOR TRANS., INC., 13-15 East Main Street, Erving, MA. 01344 and for acquisition by LEO J. FAIRBANKS and

RICHARD J. FAIRBANKS of Fairbanks Express, Inc., of control of such rights through the purchase. Applicants' representative: David M. Marshall, 101 State Street, Suite 304, Springfield, MA. 01103. Operating rights sought to be purchased: Under a Certificate of Registration in MC-120043 (Sub-No. 1), General commodities anywhere in the Commonwealth of MA. Vendee is authorized to operate as a common carrier in NY, MA and VT. Application has been filed for temporary authority under Section 210a(b).

MC-F-13900F. Authority sought for purchase by ALLARD EXPRESS, INC., 806 Elm Street, Watertown, WI 53094, of the operating rights of SPRING CITY TRUCKING COMPANY, 1352 East Ellis Street, Waukesha, WI 53186, and for acquisition by MILLICENT C. ALLARD, 806 Elm Street, Watertown, WI 53094, of control of such rights through the transaction. Applicants' Attorney: Michael J. Wyngaard, 150 East Gilman Street, Madison, WI 53703. Operating rights sought to be purchased: General commodities, except those of unusal value, classes A and B explosives, household goods as defined by the Commission, commodities in bulk, and those requiring special equipment, as a common carrier over regular routes between Milwaukee, WI and Waukesha, WI, serving no intermediate points, but serving the plant site of Amorn Corporation at Mukwanago (Waukesha County), WI, as an off-route point in connection with carrier's authorized regular route operations: From Milwaukee over U.S. Hwy 18 to Waukesha, and return over the same route. Vendee is authorized to operate as a common carrier in IL and WI. Application has been filed for temporary authority under section 210a(b). (Hearing site: Milwaukee, WI.)

MC-F-13902F. Authority sought for purchase by TRANSCON LINES, 101 Continental Boulevard, El Segundo, CA 90245, of a portion of the operating rights of H & W EXPRESS COMPANY, 3000 Elm Street, Dubuque, IA., 52001. Vendee's attorney: Wentworth E. Griffin, 1221 Baltimore Avenue, Kansas City, MO., 64105. Vendor's attorney: Carl L. Steiner, 39 South La Salle Street, Chicago, Il. 60603. Operating rights sought to be transferred: *General commodities,* as a common carrier, over regular routes, between Minneapolis, MN. and Farmington, MN., serving all intermediate points, and the off-route points of Peosta, Delaware, Masonville and Bettendorf, IA., Pecatonica, Winnebago, Ridott, Howardsville, Lena, Hanover and Pearl City, IL., and South St. Paul, Inergrove, Newport, North St. Paul, Columbia Heights, Robbinsdale, St. Louis Park, Hopkins, Edina, Redrock, McCarron Lake, Fort Snelling, and State Fair Grounds, MN.: From Minneapolis over U.S. Hwy. 65 to junction MN. Hwy. 50, then over MN. Hwy. 50 to Farmington (formerly U.S. Hwy. 65 for entire route), and return over the same route. Vendee is authorized to operate as a common carrier in Docket MC-110325, and Subs thereto, in AL., AZ., AR., CA., CO., CT., DE., DC., GA., ID., IL., IN., IA., KS., KY., LA., MD., MA., IM., MS., MO., MT., NB., NV., NJ., NM., NY., NC., OH., OK., OR., PA., RI., SD., SC., TN., TX., UT., VA., WA., WV., WI., and WY. Application has not been filed for temporary authority under Section 210 a(b).

MC-F-13903F. Authority sought for control by PRINCETON MESSENGER SERVICE, INC., U.S. Route 1, Princeton, NJ, 08540, of SWAN MESSENGER SERVICE, INC., P.O. Box 604, Somerville, NJ, 08876. Applicant's representative: Harold G. Hernly, Jr., 110 South Columbus Street, Alexandria, VA, 22314. Operating rights sought to be acquired: *Common carrier,* by motor vehicle, over irregular routes: (1) *Documents, advertising material, books, materials* and *electrical parts,* and interoffice correspondence, in packages not exceeding 250 pounds, in shipments not exceeding 5000 pounds, between points in Middlesex and somerset Counties, NJ, on the one hand, and, on the other, Philadelphia, PA, Wilmington, DE, and New York, NY, and points in Nassau, Suffolk, and Westchester Counties, NY, and Fairfield, New Haven, and Hartford Counties, CT. (2) *Dentifrices* and *dental materials and supplies* in packages, in shipments not exceeding seven pounds, (a) between Philadelphia, PA, on the one hand, and, on the other, points in Middlesex, Somerset, and Union Counties, NJ; (b) between points in Middlesex, Somerset, and Union Counties, NJ. Restriction: The authority granted herein is restricted to the transportation of shipments which are both picked up and delivered on the same day. (3) *General commodities,* except Classes A and B explosives, household goods as defined by the Commission, commodities in bulk, commodities requiring special equipment, cash letters, articles of unusual value, radio pharmaceuticals and medical isotopes, and exposed and processed film and prints, restricted to packages of 250 pounds or less and aggregate shipments to any one customer in any one day not exceeding 5000 pounds, between points in Middlesex County, NJ, on the one hand, and, on the other, Baltimore, MD. Restriction: The service authorized herein is restricted against the transportation (1) of any packages weighing more than 250 pounds each, and (2) of shipments weighing in the aggregate more than 5000 pounds from one consignor to consignee on any one day.

Transferee is authorized to operate as a common carrier in Pennsylvania, New Jersey and New York. Application has been filed for temporary authority under Section 210a(a).

MC-F-13904F. Authority sought for purchase by THE HOCKING CARTAGE COMPANY, 28424 Chiefton Drive, Logan, Ohio 43132, of a portion of the operating rights of EDGAR W. LONG, INC., Route 4, Zanesville, Ohio 43701, and for acquisition by Robert W. Emerson, Sr. and Robert W. Emerson, Jr., of 28424 Chiefton Drive, Logan, Ohio 43132, of control of such rights through the transaction. Applicants' attorneys, A. Charles Tell, 100 East Broad Street, Columbus, Ohio 43215 and Richard H. Brandon, 220 West Bridge Street, Dublin, Ohio 43017. Operating rights sought to be purchased authorize irregular route motor *common carrier* service in the transportation of: *Earthenware, chinaware, stoneware, pottery, metal stands,* and *glass gazing globes,* from New Lexington, OH and points within 5 miles thereof, to NY and points in IL, IN, MI, CT, RI, MA, NH, VT, and ME, with no transportation for compensation on return, except as otherwise authorized; from Newell and Chester, WV and points within 5 miles each in Hancock County, WV and Sebring, OH to Jamaica and Albany, NY, Boston, MA and East Hartford, CT, with no transportation for compensation on return, except as otherwise authorized. *Clay products, glass gazing globes,* and *metal stands* for clay products, from points in Perry County, OH, to points in AL, AR, GA, LA, MS, NC, OK, SC, and *Clay pottery, metal stands* for clay pottery, *clay saggers, earthenware,* and *glass gazing globes,* from points in Perry County OH, to points in FL; and *Glass gazing globes* and *clay saggers,* from points in Muskingum County, OH, to points in FL; and *Empty containers* used in transporting all of the above commodities specified in the four paragraphs next above, from the above-specified destination points to their respective origin points. *Clay products,* from New Lexington, OH to points in IA, KY, MO, TN, and WI, with no transportation for compensation on return, except as otherwise authorized. *Clay products,* from New Lexington, OH, to points in AZ, CA, CO, ID, KS, LA, MT, NB, NV, NM, ND, OR, SD, UT, WA, WY, and points in that part of MN on and west of a line extending along the Mississippi River to junction with the western boundary of Itasca County, MN, thence northward along the western boundaries of Itasca and Koochiching Counties, MN, to the US-Canada Boundary line, with no transportation

for compensation on return, except as otherwise authorized. *Clay quarry tile* and *clay roofing tile,* from New Lexington, OH, to points in DE, MD, NJ, VA, and DC, and points in that part of NY on, north and east of a line beginning at Oswego, NY, extending along U.S. Hwy 104 to Maple View, NY, thence southward along U.S. Hwy 11 to the NY-PA state line except New York, NY, with no transportation for compensation on return, except as otherwise authorized. Restriction: The authority granted herein is restricted to the transportation of traffic originating at New Lexington, OH. *Earthenware, chinaware, stoneware, pottery, metal stands,* and *glass gazing globes,* from Roseville, Zanesville, Scio, and Logan, OH, and points within 5 miles of each, to points in the U.S. (except AK and HI), with no transportation for compensation on return, except as otherwise authorized. Vendee is authorized to operate as a *common carrier* in the states of IL, IN, KY, MD, MI, OH, PA, WV, and WI. Application has been filed for temporary authority under Section 210a(b).

MC-F-13905F. Authority sought for purchase by BEST REGRIGERATED EXPRESS, INC., P.O. Box 7365, Omaha, NE, 68107 of a portion of the operating rights of MERLE NICOLA, TRUSTEE IN BANKRUPTCY AND FIRST WESTROADS BANK, INC., A SECURED CREDITOR OF REDFEATHER FAST FREIGHT, INC., 270 Italia Mall, Omaha, NE., 68114, of control of such rights through the transaction. Applicants' Representative: William J. Boyd 600 Enterprise Drive, Suite 222, Oak Brook, IL., 60521. Operating rights sought to be transferred: as set forth in Certificate No. MC-139999, issued June 24, 1975, as follows: Lot 1 Regular Routes: Packinghouse products, fresh, cured, and pickled meats, dressed poultry, eggs, dairy products, and articles merchandised by packinghouses, From Kansas City, Kans., to Bartlesville, Okla., serving the intermediate points of Cleveland, Hominy, Pawhuska, and Barnsdall, Okla., for delivery only: From Kansas City over Kansas Highway 10 to Shawnee, Kans., thence over U.S. Highway 50 to Olathe, Kans., thence over U.S. Highway 169 to Tulsa, Okla., thence over U.S. Highway 64 to Cleveland, Okla., thence over Oklahoma Highway 99 to Pawhuska, Okla., thence over Oklahoma Highway 11 to Barnsdall, Okla., thence over Oklahoma Highway 123 to Bartlesville; and Return from Bartlesville over U.S. Highway 75 to Topeka, Kans., thence over U.S. Highway 40 to Kansas City, with no transportation for compensation except as otherwise authorized. Lot 2 Regular Routes: Packinghouse products, supplies, materials, and equipment, From Kansas City, Mo., to Tulsa, Okla., serving the intermediate point of Kansas City, Kans.: From Kansas City, Mo., over city streets to Kansas City, Kans., thence over Kansas Highway 10 to Shawnee, Kans., thence over U.S. Highway 50 to junction U.S. Highway 59, thence over U.S. Highway 59 to junction U.S. Highway 169, thence over U.S. Highway 169 to junction U.S. Highway 160, thence over U.S. Highway 160 to Independence, Kans., thence over U.S. Highway 75 to Tulsa, and return over the same route, with no transportation for compensation except as otherwise authorized. Lot 3, Irregular Routes: Canned goods, From Chicago, Washington, Morton, Eureka, Blue Island, and Morrison, Ill., to Springfield, and Joplin, Mo., with no transportation for compensation on return except as otherwise authorized. Lot 4, Irregular Routes: Butter, eggs (dried, fresh, or frozen), and poultry, From Sedalia, Mo., to Calument, Chicago and Rock Island, Ill., with no transportation for compensation on return except as otherwise authorized. Lot 5, Irregular Routes: Fresh meat and packinghouse products, From Kansas City, Kans., to Cameron, Hamilton, Nettleton, Breckenridge, Mooresville, Utica, Chillicothe, Wheeling, Meadville, Laclede, Linneus, Purdin, Browning, Milan, Reger, Humphreys, Galt, Trenton, Jamesport, Gallatin, Green City, Green Castle, Novinger, Connelsville, Kirksville, Sublette, Greentop, Queen City, Lancaster, Downing, Memphis, Greensburg, Rutledge, Baring, Edina, Hurdland, Gibbs, Brashear, Axtell, Shelbyville, Bethel, Leonard, Novelty, Excello, Millard, La Plata, Lovelake, Atlanta, Brookfield, Bucklin, New Cambria, Callao, Bevier, Macon, Anable, Clarence, Lentner, Shelbina, Hunnelwell, Monroe City, Glenwood, and Elmer, Mo., with no transportation for compensation on return except as otherwise authorized. Lot 6 Irregular Routes: Meats, meat products, and meat by-products as described in Appendix I to the report in Descriptions in Motor Carrier Certificates, 61 M.C.C. 209 and 766, From Peoria, Ill., and Des Moines, Dubuque, Cedar Rapids, Marshalltown, Fort Dodge, and Mason City, Iowa, to Arkansas City, Kans.; and Lot 7 Irregular Routes: Empty containers used in transporting the immediately above-described commodities, From Arkansas City, Kans., to the immediately above-specified origin points. Restriction: The separate authorities above shall not be joined or tacked, directly or indirectly, one to another, for the purpose of performing a through transportation service. Lot 8 Irregular Routes: Meats, packinghouse products, and commodities used by packinghouses, as described in Appendix I to the report in Descriptions in Motor Carrier Certificates, 61 M.C.C. 209 and 766, in peddle service, in vehicles, equipped with temperature control devices, and meat racks and rails, From Kansas City, Mo.,-Kans., to points in Baca, Cheyenne, Kiowa, and Prowers Counties Colo., and Cimarron and Texas Counties, Okla.; and Damaged and returned shipments of the immediately above-described commodities, From the immediately above-specified destination points to Kansas City, Mo.-Kans. Lot 9 Irregular Routes: Meats, meat products, and meat by-products, and articles distributed by meat packinghouses as described in Sections A and C of Appendix I to the report in Descriptions in Motor Carrier Certificates, 61, M.C.C. 209 and 766, (except commodities in bulk), From the plant site of Swift & Company, located at or near St. Joseph, Mo., to Highland, Munster, and Griffith, Ind., with no transportation for compensation on return except as otherwise authorized. Restriction: The service authorized in the commodity description next-above is restricted to the transportation of traffic originating at the plant site of Swift & Company, located at or near St. Joseph, Mo. From West Point, Nebr., to points in Missouri and Illinois, points in Indiana within the Chicago, Ill., Commercial Zone as defined by the Commission, points in Cimarron and Texas Counties, Okla., and to Kansas City and Arkansas City, Kans., and Bartlesville, Cleveland, Hominy, Pawhuska, Barnsdall, and Tulsa, Okla., with no transportation for compensation on return except as otherwise authorized. Restriction: Service authorized under the commodity description next-above is subject to the following conditions: Service is restricted to traffic originating at the plant of Armour & Company at or near West Point. Service is restricted against the tacking of such authority with other authority granted herein for the purpose of providing through service from and to points other than those indicated. Lot 11 Irregular Routes: From West Point, Nebr., to St. Joseph and Kansas City, Mo., Chicago, Springfield, and Joliet, Ill., Newton and Des Moines, Iowa, and points within 12 miles of the central post office at Des Moines (except Altoona, Ankeny, Carlisle, Des Moines, and Norwalk, Iowa), with no transportation for compensation on return except as otherwise authorized. Restriction: The service authorized in the commodity description next above is restricted to traffic originating at the plant of Armour & Company situated at or near West Point, Nebr. Lot 12 Irregular Routes: Such commodities, as are used by meat packers in the conduct of their business when destined to, designated by, and for use of meat

packers, except commodities in bulk, From Chicago, Ill., to the plant site of Armour & Company, at or near West Point, Nebr., with no transportation for compensation on return except as otherwise authorized. Lot 13 Irregular Routes: Meats, meat products, and meat by-products and articles, distributed by meat packinghouses, as described in sections A and C of Appendix I to the report in Descriptions in Motor Carrier Certificates, 61 M.C.C. 209 and 766, From the plant site of Wilson & Co., Inc., at Monmouth, Ill., to points within the Chicago, Ill., Commercial Zone, as defined by the Commission, and points in Iowa, Kansas, Indiana, and Missouri; and Lot 14 Irregular Routes: Such commodities as are used by meat packers in the conduct of their business when destined to and for use by meat packers as described in section D of Appendix I to the report in Descriptions in Motor Carriers Certificates, 61 M.C.C. 209 and 766, From points within the Chicago, Ill., Commercial Zone, as defined by the Commission, and points in Iowa, Kansas, Indiana, and Missouri, to the plant site of Wilson & Co., Inc., at Monmouth, Ill. Restriction: The service authorized in the 2 commodity descriptions next-above is subject to the following conditions: The authority granted in the two commodity descriptions next above is restricted to the transportation of shipments originating at or destined to the plant site of Wilson & Co., Inc., at Monmouth, Ill. The authority granted in the two commodity descriptions next-above is restricted against the transportation of commodities in bulk, in tank vehicles. Lot 15 Irregular Routes: Meats, meat products, and meat by-products, and articles distributed by meat packinghouses, as described in Sections A and C of Appendix I to the report in Descriptions in Motor Carrier Certificates, 61 M.C.C. 209 and 766 (except hides and commodities in bulk, in tank vehicles), From Sioux City, Iowa, to points in Illinois, Wisconsin, Missouri, Kansas, Oklahoma, Iowa, and Indiana (except Chicago, Ill., and points in Illinois and Indiana in its commerical zone as defined by the Commission), with no transportation for compensation on return except as otherwise authorized. Restriction: The operations authorized in the route description next-above are restricted to shipments originating at Sioux City, Iowa, and destined to the named points of destination. Lot 16 Irregular Routes: Meats, meat products, and meat by-products, and articles distributed by meat packinghouses, as described in Sections A and C of Appendix I to the report in Descriptions in Motor Carrier Certificates, 61 M.C.C. 209 and 766 (except hides and commodities in bulk, in tank vehicles), From the plant site of Armour and Company near Sterling, Ill., to points in Iowa, Kansas and Missouri, with no transportation for compensation on return except as otherwise authorized. Restriction: In connection with the authority granted next-above, traffic to the transported shall be limited to that originating at the plant site of Armour and Co., at or near Sterling, Ill. Lot 17 Irregular Routes: Meats, meat products and meat by-products, and articles distributed by meat packinghouses, as described in Sections A and C of Appendix I to the report in Descriptions in Motor Carriers Certificates, 61 M.C.C. 209 and 766, (except commodities in bulk, in tank vehicles), From the plant site of Producers Packing Company near Garden City, Kans., to points in Illinois, Indiana, Iowa, Michigan, Missouri, Nebraska and Wisconsin, with no transportation for compensation on return except as otherwise authorized. Restriction: the service authorized in the commodity description next-above is restricted to traffic originating at the plant site of Producers Packing Company near Garden City, Kans. Lot 18 Irregular Routes: Meats, meat products, meat by-products, dairy products, and articles distributed by meat packinghouses, as described in Sections A, B, and C of Appendix I to the report in Descriptions in Motor Carrier Certificates, 61 M.C.C. 209 and 766, except liquid commodities in bulk, in tank vehicles. Between the plant site of Swift & Co., at Rochelle, Ill., on the one hand, and, on the other, Kansas City, St. Louis, St. Joseph, Sedalia, and Trenton, Mo. Restriction: The authority granted next-above is restricted to the transportation of shipments originating at, or destined to, the plant site of Swift & Co., at Rochelle, Ill. Lot 19 Irregular Routes: Such commodities as are used by meatpackers in the conduct of their businesses when destined to and for use by meat packers, except commodities in bulk, From Chicago, Ill., to West Point, Nebr., with no transportation for compensation on return except as otherwise authorized. Restriction: the service authorized immediately above is restricted to traffic destined to the plant of Armour & Company at or near West Point, Nebr. Lot 20 Irregular Routes: Frozen foods, (except meats, meat products and meat by-products, and articles distributed by meat packinghouses, as described in Section A and C of Appendix I to the report in Descriptions in Motor Carrier Certificates, 61 M.C.C. 209 and 766, and dairy products, and commodities in bulk, in tank vehicles), From Darien, Wis., to points in Arkansas, Missouri, and Kansas, with no transportation for compensation on return except as otherwise authorized. Restricted: The authority granted next-above is restricted (1) against tacking with any authority granted herein and (2) against interlining at Darien, Wis. Lot 21 Irregular Routes: Edible animal fats, and animal oils, and vegetable oils, including products and blends thereof, with or without emulsifiers, preservatives, coloring or additives, in packages, and oleomargarine, in packages, From the site of the refinery plant of the Shortening and Edible Oil Division of Armour & Company at or near Bradley, Ill., to Springfield, Joplin, Trenton, St. Joseph, and St. Louis, Mo., with no transportation, for compensation on return except as otherwise authorized. Lot 22 Irregular Routes: Animal fats, in packages, From St. Joseph, Mo., to the site of the refinery plant of the Shortening and Edible Oil Division of Armour & Company at or near Bradley, Ill., with no transportation for compensation on return except as otherwise authorized, also as follows in Docket No. MC-139999, Sub No. 12, issued December 9, 1977 Irregular Routes, Meats, meat products, meat by-products and articles produced and distributed by meat packinghouses, From the plant site of Farmland Foods, Inc., at or near Garden City, Kans., to points in Connecticut, Delaware, Kentucky, Maine, Maryland, Massachusetts, New Hampshire, New Jersey, New York, Ohio, Pennsylvania, Rhode Island, Tennessee, Vermont, Virginia, West Virginia, and the District of Columbia, with no transportation for compensation on return except as otherwise authorized. Restriction: The operations authorized herein are restricted to traffic originating at the named origin and destined to points in the named destination States and District. This certificate is issued pursuant to an application filed after November 23, 1973, and in accordance with 49 CFR 1065 may not be tacked or joined with the carrier's other irregular-route authority unless specifically authorized herein. Sub No. 17, issued August 25, 1978, Irregular Routes: Meats, meat products, meat by-products, and articles distributed by meat packinghouses, as described in Sections A and C of Appendix I to the report in Descriptions in Motor Carrier Certificates, 61 M.C.C. 209 and 766 (except hides and commodities in bulk), From the facilities of Union Packing Co., Inc., located at Omaha, Nebr., to points in Connecticut, Florida, Illinois, Indiana, Kansas, Kentucky, Massachusetts, Michigan, Minnesota, New Jersey, New York, Ohio, Pennsylvania, and Wisconsin. Restriction: The authority granted herein is restricted to traffic originating at the named origin and destined to points in the named destination States. This certificate may not be joined or tacked with the carrier's

other irregular-route authority. Sub No. 20, issued August 25, 1978, Irregular Routes: Meats, meat products, meat by-products, and articles distributed by meat packinghouses, as described in Sections A and C of Appendix I to the report in Descriptions in Motor Carrier Certificates, 61 M.C.C. 209 and 766 (except hides and commodities in bulk), From the plant site of Dubuque Packing Co., located at or near Mankato, Kans., to points in Connecticut, Illinois, Indiana, Iowa, Massachusetts, Michigan, New Jersey, New York, Ohio, Pennsylvania, Rhode Island, and Wisconsin. Restriction: The authority granted herein is restricted to traffic originating at the named origin and destined to points in the named destination States. This certificate may not be joined or tacked with the carrier's other irregular-route authority. Sub No. 22, issued Mar. 10, 1978, Irregular Routes: Meat, meat products, meat by-products, and articles distributed by meat packinghouses, as described in Sections A and C of Appendix I to the report in Descriptions in Motor Carrier Certificates, 61 M.C.C. 209 and 766, (except hides and commodities in bulk), From the facilities of Minden Beef Company, located at or near Minden, Nebr., to points in Connecticut and New York, with no transportation for compensation on return except as otherwise authorized. Restriction: The operations authorized herein are restricted to the transportation of traffic originating at the above-named origin and destined to the above-named destination States. This certificate is issued pursuant to an application filed after November 23, 1973, and in accordance with 49 CFR 1065 may not be tacked or joined with the carrier's other irregular-route authority unless specifically authorized herein. Sub No. 23, issued September 11, 1978, Irregular Routes: Meats, meat products, meat by-products and articles distributed by meat packinghouses (except hides and commodities in bulk), as defined in sections A and C of Appendix I to the report in Descriptions in Motor Carrier Certificates, 61 M.C.C. 209 and 766, From the facilities of Wilson Foods Corporation, at Cherokee, IA, to points in CT, DE, ME, MD, MA, NH, NJ, NY, PA, RI, VT, VA, and DC. Restriction: The authority granted herein is restricted to the transportation of shipments originating at the above named origins and destined to the named destinations. This certificate may not be joined or tacked with the carrier's other irregular-route authority. Sub No. 25, issued August 3, 1978, Irregular Routes: Meats, meat products, meat by-products and articles distributed by meat packinghouses as described in Sections A and C of Appendix I to the report in Descriptions in Motor Carrier Certificates, 61 M.C.C. 209 and 766, (except hides and commodities in bulk), From the plantsite and facilities of Hy-Plains Dressed Beef, Inc., at Dodge City, Kans., to points in Nebraska, Iowa, Minnesota, Wisconsin, Illinois, Indiana, Missouri, Oklahoma, Arkansas, Colorado, Tennessee, Kentucky, Ohio, Michigan, Pennsylvania, New York, Virgina, West Virginia, Massachusetts, New Hampshire, District of Columbia, Delaware, New Jersey, Maryland, Texas and Louisiana. Restriction: The authority granted herein is restricted to the transportation of traffic originating at the above named origin and destined to points in the named destination states and the District of Columbia. This certificate may not be joined or tacked with the carrier's other irregular-route authority. (Hearing Site: Omaha, NE) Vendee is authorized to operate as a common carrier in the States of IA, CO, NH, MA, RI, CT, NY, PA, NJ, DE, MD, VA, WV, KY, OH, IN, IL, MI, WI, MN, DC, NE, and MO. Application has been filed for temporary authority under section 210a(b) of the Act.

MC-F-13907F. Authority sought for purchase by MOTOR EXPRESS, INC., 501-506 Bulkley Building, 1501 Euclid Avenue, Cleveland, OH., 44115, of the operating rights of THE CLEVELAND, COLUMBUS & CINCINNATI HIGHWAY, INC., 201 Stouffer Building, 1375 Euclid Avenue, Cleveland, OH., 44115. Applicant's Attorney: Robert A. Sullivan, Sullivan and Leavitt, P.C., 22375 Haggerty Road, P.O. Box 400, Northville, MI., 48167 and Myer Feldman, Ginsburg, Feldman & Bress, 1700 Pennsylvania Avenue, NW., Washington, D.C. 20006. Operating rights sought to be purchased: A regular route authorizing the transportation of general commodities, with the usual exceptions, between Detroit, MI and Toledo, OH over U.S. Hwy 24. The authority to be transferred is to be restricted against the providing of a local service between Toledo, OH and Detroit, MI. Vendee is authorized to operate as a common carrier in the States of PA, NY, and OH. Application has not been filed for temporary authority under section 210a(b). Hearing site: Cleveland, OH.

MOTOR CARRIER OF PASSENGERS

MC-F-13910F. Applicant: WESTOURS, INC., 100 West Harrison Plaza, Seattle, WA 98119. Representative: S. Harrison Kahn, Attorney at Law, Kahn and Kahn, Suite 733 Investment Building, Washington, D.C. 20005. Authority is sought herein for Westours, Inc., 100 West Harrison Plaza, Seattle, Washington, under Section 5 of the Interstate Commerce Act, to control Evergreen Trails, Inc., 1936 Westlake, Seattle, Washington 98101, a motor common carrier of passengers and their baggage engaged in regular route, charter and special operations with headquarters at Seattle, Washington. Evergreen Trails, Inc. is authorized to operate over regular routes within the State of Washington and between points and places in the State of Washington, on the one hand, and, on the other, in charter and special operations to points and places in the United States. Westours, Inc. is not a carrier under the jurisdiction of the Interstate Commerce Commission but controls Westours Motor Coaches, Inc., a motor common carrier of passengers under the jurisdiction of the Interstate Commerce Commission and Westours Hyway Holidays, Inc., a broker of motor carrier passenger transportation. No application for temporary authority has been filed. HEARING SITE: Seattle, Washington.

MC-F-13913F. Authority sought for the merger of the operating rights and properties of Oklahoma Border Express, Inc., and M & M Freight Lines, Inc., both of 2050 Kings Road, Jacksonville, FL 32209, into Ryder Truck Lines, Inc., 2050 Kings Road, Jacksonville, FL 32209, for ownership, management and operation, and the acquisition by IU Transportation Services, Inc., and, in turn, IU International Corporation, both of 1105 North Market Street, Wilmington, DE 19801, of control of the operating rights and properties through the merger. Applicants' representatives: Roland Rice, Esquire, 501 Perpetual Bldg., 1111 "E" Street N.W., Washington, DC 20004; and H. Beatty Chadwick, Esquire, 1500 Walnut Street, Philadelphia, PA 19102. Operating rights to be merged: (1) From M & M, regular routes, *General commodities*, with exceptions, between Muskogee, OK and McAlester, OK, serving all intermediate points, and between Muskogee, OK and Braggs, OK, serving the off-route point of Camp Gruber, OK, including the military area embraced therein, and serving all intermediate points; (2) from OBX, regular routes, *General commodities*, except those of unusual value, classes A and B explosives, household goods, as defined by the Commission, commodities in bulk, and those requiring special equipment, Between Sallisaw, OK, and Fort Smith, AR, serving all intermediate points and the off-route point of Hanson, OK; From Sallisaw over U.S. Highway 64 to Fort Smith, and return over the same route. Between Sallisaw, OK, and Vian, OK, serving all intermediate points: From Sallisaw over U.S. Highway 64 to Vian, and return over the same route. Between Vian, OK, and Eufaula, OK, serving the intermediate points of Gore, Warner, and Checotah, OK, and the off-route point of Web-

bers Falls, OK: From Vian over U.S. Highway 64 to Warner, OK, thence over U.S. Highway 266 to Checotah, OK, thence over U.S. Highway 69 to Eufaula, and return over the same route. Serving the sites of Robert S. Kerr Lock and Dam and Webbers Falls Lock and Dam as off-route points in connection with carrier's regular-route operations authorized above, between Fort Smith, AR, and Eufaula, OK. Between Checotah, OK, and Prague, OK, serving all intermediate points: From Checotah over U.S. Highway 266 to Henryetta, OK, thence over U.S. Highway 62 to Prague, and return over the same route. Between Eufaula, OK, and junction U.S. Highways 62 and 75 at or near Henryetta, OK, serving all intermediate points: From Eufaula over Oklahoma Highway 9 to Wetumka, OK, thence over U.S. Highway 75 to junction U.S. Highway 62, and return over the same route. *General commodities,* except those of unusual value, classes A and B explosives, household goods as defined by the Commission, and those requiring special equipment, Between Fort Smith, AR, and Marble City, OK, serving the intermediate points of Roland, Gans, Short Mountain Dam Site and Sadie, OK: From Fort Smith over U.S. Highway 64 to junction Oklahoma Highway 141, thence over Oklahoma Highway 141 to junction U.S. Highway 59, thence over U.S. Highway 59 to junction unnumbered county road (known as Old 17), thence over unnumbered country road to Marble City, and return over the same route (also return over unnumbered county road to junction U.S. Highway 64, thence over U.S. Highway 64 to Fort Smith). *General commodities,* except those of unusual value, classes A and B explosives, livestock, household goods as defined by the Commission, commodities in bulk, commodities requiring special equipment, and those injurious or contaminating to other lading, Between Oklahoma City, OK, and Prague, OK, serving all intermediate points, but restricted against the transportation of traffic (1) originating at Oklahoma City, OK, and (2) destined to Henryetta, OK, and points in its commercial zone as defined by the Commission, Weleetka and Wetumpka, OK, and intermediate points on the said route, originating at the points specified in (2) and destined to Oklahoma City, OK: From Oklahoma City over U.S. Highway 62 to Prague, and return over the same route. IRREGULAR ROUTES: *Flat glass,* From the facilities of P.P.G. Industries at or near Wichita Falls, TX, to Lawton, OK, serving Lawton, OK, for purposes of joinder only with carrier's authorized regular-route operations between Oklahoma City and Altus, OK, with no tranportation for compensation on return except as otherwise authorized. *Restriction:* The operations authorized herein are restricted against service in the transportation of traffic moving from the facilities of P.P.G. Industries at or near Wichita Falls, TX, to Fort Smith, AR, and points within the Commercial Zone of Fort Smith, AR, as defined by the Commission. (Hearing site: Washington, D.C.)

NOTE.—By order in MC-F-12916 dated May 9, 1977, as amended by order dated September 21, 1977, transferee was authorized to purchase the outstanding capital stock of OBX and to lease the operating rights and properties of OBX and M & M for a period of three years. The purpose of this application is to merge the operating rights and properties presently controlled by transferee pursuant to these orders. Transferee is authorized to operate pursuant to Certificate No. MC-2900 and Subs as a common carrier of general and specified commodities in the States of AL, AR, CT, DE, FL, GA, IL, IN, KY, LA, MA, MD, ME, MI, MO, MS, NC, NH NJ, NY, OH, OK, PA, RI, SC, TN, TX, VA, WI, WV, and DC.

OPERATING RIGHTS APPLICATION(S) DIRECTLY RELATED TO FINANCE PROCEEDINGS

The following operating rights application(s) are filed in connection with pending finance applications under Section 11343 (formerly Section 5(2)) of the Interstate Commerce Act, or seek tacking and/or gateway elimination in connection with transfer applications under Section 1926 (formerly section 212(b)) of the Interstate Commerce Act).

An original and one copy of protests to the granting of the authorities must be filed with the Commission within 30 days after the date of this FEDERAL REGISTER notice. Such protests shall comply with Special Rule 247(e) of the Commission's *General Rules of Practice* (49 CFR 1100.247) and include a concise statement of protestant's interest in the proceeding and copies of its conflicting authorities. Verified statements in opposition should not be tendered at this time. A copy of the protest shall be served concurrently upon applicant's representative or applicant if no representative is named.

Each applicant states that approval of its application will not significantly affect the quality of the human environment nor involve a major regulatory action under the Energy Policy and Conservation Act of 1975.

MC 79085 (Sub-3F), filed January 17, 1979. Applicant: FAIRBANKS EXPRESS, INC., North Hoosick Road, P.O. Box 232, Hoosick Falls, NY 12090. Representative: David M. Marshall, 101 State Street, Suite 304, Springfield, MA 01103. Authority sought to operate as a *common carrier* by motor vehicle, over irregular routes, transporting: *General commoditites* (except those of unusual value, Classes A and B explosives, household goods as defined by the Commission, commodities requiring special equipment), between points in MA. (Hearing site: Albany, NY, Boston, MA or Washington, DC)

NOTE: The purpose of this application is to convert a certificate of registration to a certificate of public convenience and necessity, being acquired by applicant in the Finance proceeding entitled Fairbanks Express, Inc.—Purchase—Erving Motor Trans., Inc., docketed Mc-F-13897F, and published in a previous section of this FEDERAL REGISTER issue.

MC 110683 (MIF) notice of petition filed October 23, 1978, to delete liquor and tobacco restrictions contained in authority sought to be acquired by Smith's Transfer Corportation in Docket No. MC F-13332. Petitioner: Smith's Transfer Corporation, Post Office Box 1000, Staunton, Virginia 24401. Representative, David G. Macdonald, 1000 Sixteenth St., NW., Washington, D.C. 20036. This petition is directly related to docket No. MC F-13332, Smith's Transfer Corporation-Purchase (Portion)-Akers Motor Lines, Inc., filed August 31, 1977, wherein authority is sought under section 5 of the Interstate Commerce Act for Smith's Transfer Corporation to Purchase Certain operating rights of Akers Motor Lines covered by certificates No. MC 72442 (sub-nos. 8, 13, 15, 18, 22, 23, 29, 31 and 41) and a portion of certificates No. MC 72442 (sub-nos. 5, 7, and 19). Of the authority involved in proceeding No. MC F-13332, the certificates, with the exception of sub-no. 41, contain a restriction against the transportation of tobacco and liquor. By this petition, Smith's Transfer Corporation seeks to delete the liquor and tobacco restrictions contained in the Akers authority so as to conform with Smith's existing authority. It is further requested that such deletion become effective upon approval by the Commission of transaction No. MC F-13332 and concurrently with consummation of said transaction.

NOTE.—MC F-13332 was published in the FEDERAL REGISTER issue of September 22, 1977.

MC 145548 (Sub-3F), filed January 4, 1979. Applicant: COMMUNITY TRANSIT LINES, INC., 315 Howe Ave., Passaic, NJ 07055. Representative: J. G. Dail, Jr., P.O. Box LL, McLean, VA 22101. Authority sought to operate as a *common carrier,* by motor vehicle, over regular routes, transporting *passengers and their baggage,* between the junction of the Garden State Parkway and New Jersey Highway 3 in Clifton, NJ, and New York, NY, serving all intermediate points between the junction of the Garden State Parkway and New

Jersey Highway 3 and the Hackensack River: from junction Garden State Parkway and New Jersey Highway 3 over New Jersey Highway 3 to junction Interstate Highway 495 in North Bergen, NJ, then over Interstate Highway 495 through the Lincoln Tunnel to New York, and return over the same route. (Hearing site: Passaic, NJ.)

NOTE.—Common control may be involved. This application is directly related to No. Mc F-13780F, in which applicant is seeking authority to purchase a portion of the operating rights of DeCamp Bus Lines which authorize regular-route passenger transportation between the western terminus of the authority sought and numerous points in New Jersey. The authority sought would be joined at that point with the rights being purchased from DeCamp in order to continue the passenger service to and from New York City heretofore performed by DeCamp under the authority being purchased. MC F-13780F was published in the FEDERAL REGISTER issue of November 2, 1978.

By the Commission.

H. G. HOMME, Jr.,
*Secretary.*

[FR Doc. 79-4844 Filed 2-14-79; 8:45 am]

---

[4110-88-M]

## DEPARTMENT OF HEALTH, EDUCATION, AND WELFARE

### Alcohol, Drug Abuse, and Mental Health Administration

### EMPLOYEES OF UNIVERSITY OF CALIFORNIA, LOS ANGELES

#### Research on Mental Health; Authorization of Confidentiality

Under the Authority vested in the Secretary of Health, Education, and Welfare by Section 303(a) of the Public Health Service Act (42 U.S.C. 242a(a)), all persons who:

1. are employed by University of California, Los Angeles, California; and

2. have, in the course of their employment, access to information which would identify individuals who are the subjects of the research on mental health which is assisted by the Department of Health, Education, and Welfare grant numbered RO1 MH 24947 titled "Child Mental Health in Alternative Family Styles"; are hereby authorized to protect the privacy of the individuals who are the subjects of that research by withholding their names and other identifying characteristics from all persons not connected with the conduct of that research.

As provided in Section 303(a) of the Public Health Service Act (42 U.S.C. 242a(a)):

Persons so authorized to protect the privacy of such individuals may not be compelled in any Federal, State, or local civil, criminal, administrative, legislative, or other proceedings to identify such individuals.

This authorization does not authorize employees of University of California, Los Angeles, to refuse to reveal to qualified personnel of the Department of Health, Education, and Welfare for the purpose of management or financial audits or program evaluation, the names or other identifying characteristics of individuals who are the subjects of the research conducted pursuant to the Department of Health, Education, and Welfare grant numbered RO1 MH 24947. Such personnel will hold any identifying information so obtained strictly confidential in accordance with 45 DFR 5.71.

This authorization is applicable to all information obtained pursuant to Department of Health, Education, and Welfare grant numbered RO1 MH 24947 which would identify individuals who are subjects of the research conducted under the grant.

Dated: January 15, 1979.

HERBERT PARDES, M.D.,
*Director, National Institute of Mental Health.*

Dated: January 19, 1979.

KARST BESTEMAN,
*Acting Director, National Institute on Drug Abuse.*

Dated: January 29, 1979.

GERALD L. KLERMAN, M.D.,
*Administrator, Alcohol, Drug Abuse, and Mental Health Administration.*

[FR Doc. 79-4907 Filed 2-14-79; 8:45 am]

---

[4110-88-M]

### EMPLOYEES OF KENT STATE UNIVERSITY

#### Research on Mental Health; Authorization of Confidentiality

Under the authority vested in the Secretary of Health, Education, and Welfare by Section 303(a) of the Public Health Service Act (42 U.S.C. 242(a)), all persons who:

1. are employed by Kent State University, Kent, Ohio; and

2. have, in the course of their employment, access to information which would identify individuals who are the subjects of the research on mental health which is assisted by the Department of Health, Education, and Welfare grant numbered R01 MH 31618 titled "Hidden Rape on a University Campus"; are hereby authorized to protect the privacy of the individuals who are the subjects of that research by withholding their names and other identifying characteristics from all persons not connected with the conduct of that research.

As provided in Section 303(a) of the Public Health Service Act (42 U.S.C. 242a(a)):

Persons so authorized to protect the privacy of such individuals may not be compelled in any Federal, State, or local civil, criminal, administrative, legislative, or other proceedings to identify such individuals.

This authorization does not authorize employees of Kent State University to refuse to reveal to qualified personnel of the Department of Health, Education, and Welfare for the purpose of management or financial audits or program evaluation, the names or other identifying characteristics of individuals who are the subjects of the research conducted pursuant to the Department of Health, Education, and Welfare grant numbered R01 MH 31618. Such personnel will hold any identifying information so obtained strictly confidential in accordance with 45 CFR 5.71.

This authorization is applicable to all information obtained pursuant to Department of Health, Education, and Welfare grant numbered R01 MH 31618 which would identify individuals who are subjects of the research conducted under the grant.

Dated: January 15, 1979.

HERBERT PARDES, M.D.,
*Director, National Institute of Mental Health.*

Dated: January 19, 1979.

KARST BESTEMAN,
*Acting Director, National Institute on Drug Abuse.*

Dated: January 29, 1979.

GERALD L. KLERMAN, M.D.,
*Administrator, Alcohol, Drug Abuse, and Mental Health Administration.*

[FR Doc. 79-4906 Filed 2-14-79; 8:45 am]

---

[4110-85-M]

### Office of the Assistant Secretary for Health

### ADVISORY COMMITTEES

#### Meetings

In accordance with section 10(a)(2) of the Federal Advisory Committee Act (Pub. L. 92-463), announcement is made of the following National Advisory bodies scheduled to meet during the month of March 1979:

Name: HEALTH CARE TECHNOLOGY STUDY SECTION
Date and Time: March 4-6, 1979, 8:00 p.m.
Place: Dupont Plaza Hotel, Gallery Room, Connecticut and Massachusetts Avenues, N.W., Washington, D.C. 20036.
Open March 4, 8:00 p.m.-10:00 p.m., March 5, 9:00 a.m.-10:00 a.m.
Closed for remainder of meeting.
Purpose: The Committee is charged with the initial review of grant applications for Federal assistance in the program areas administered by the National Center for Health Services Research.
Agenda: The open session of the meeting on March 4 will be devoted to a business meeting covering administrative matters. The open session on March 5 will consist of a presentation by the Director, NCHSR, to the Study Section. The closed portion of the meeting will be utilized in a review of health services research grant applications relating to the delivery, organization, and financing of health services. The closing is in accordance with the provisions set forth in section 552b(c)(6), Title 5, U.S. Code, and the Determination by the Assistant Secretary for Health, pursuant to Pub. L. 92-463.

Anyone wishing to obtain a roster of members, minutes of meetings, or other relevant information should contact Dr. Alan E. Mayers, National Center for Health Services Research, OASH, Room, 7-50A, Center Building, 3700 East-West Highway, Hyattsville, Maryland 20782, Telephone (301) 436-6196.

* * * * *

Name: HEALTH SERVICES DEVELOPMENTAL GRANTS STUDY SECTION
Date and Time: March 8-9, 1979, 9:00 a.m.
Place: New Executive Office Building, Room 2010, 17th and H Streets, Washington, D.C. 20506.
Open March 8, 9:00 a.m.-10:00 a.m.
Closed for remainder of meeting.
Purpose: The Committee is charged with the initial review of grant applications for Federal assistance in the program areas administered by the National Center for Health Services Research.
Agenda: the open session of the meeting on March 8 will be devoted to a business meeting covering administrative matters and reports. During the closed sessions, the Study Section will be reviewing research grant applications relating to the delivery, organization, and financing of health services. The closing is in accordance with provisions set forth in section 552b(c)(6), Title 5, U.S. Code, and the Determination by the Assistant Secretary for Health, pursuant to Pub. L. 92-463.

Anyone wishing to obtain a roster of members, minutes of meetings, or other relevant information should contact Mr. David McFall, National Center for Health Services Research, OASH, Room 7-50A, Center Building, 3700 East-West Highway, Hyattsville, Maryland 20782, Telephone (301) 436-6916.

* * * * *

Name: HEALTH SERVICES RESEARCH STUDY SECTION
Date and Time: March 15-16, 1979, 9:00 a.m.
Place: The Club Room, Ramada Inn Rosslyn, 1900 North Fort Myer Drive, Arlington, Virginia 22209.
Open March 15, 9:00 a.m.-10:00 a.m.
Closed for remainder of meeting.
Purpose: The Committee is charged with the initial review of grant applications for Federal assistance in the program areas administered by the National Center for Health Services Research.
Agenda: The open session on March 15 will be devoted to a business meeting covering administrative matters and reports. During the closed session, the Study Section will be reviewing research grant applications relating to the delivery, organization, and financing of health services. The closing is in accordance with provisions set forth in section 552b(c)(6), Title 5, U.S. Code and the Determination by the Assistant Secretary for Health, pursuant to Pub. L. 92-463.

Anyone wishing to obtain a roster of members, minutes of meetings, or other relevant information should contact Marco Montoya, Ph. D., National Center for Health Services Research, OASH, Room 7-50A, Center Building, 3700 East-West Highway, Hyattsville, Maryland 20782, Telephone (301) 436-6918.

Agenda items are subject to change as priorities dictate.

Dated: February 12, 1979.

WAYNE RICHEY, Jr.,
*Acting Associate Director for Program Support, Office of Health Research, Statistics, and Technology.*

[FR Doc. 79-4983 Filed 2-14-79; 8:45 am]

[4110-12-M]

## Office of the Secretary

## LIST OF EDUCATION DATA ACQUISITION ACTIVITIES FOR SCHOOL YEAR 1979-80

### Paperwork Control Procedures

AGENCY: Department of Health, Education, and Welfare.

ACTION: List of education data acquisition activities for School Year 1979—80.

SUMMARY: The paperwork control requirements in Section 400A of the General Education Provisions Act added by the Education Amendments of 1978 (Pub. L. 95-561), require that certain information or data requested of educational agencies and institutions by Federal agencies be reviewed by the Secretary of HEW to eliminate excessive or burdensome requests to them. Further, the data acquisition activity is to be approved and publicly announced no later than the February 15 preceding the school year in which the data are to be collected.

The following list is published as one step to meet these requirements. The list has two parts:

1. Data acquisition activities which have already been approved by the Office of Management and Budget under the forms clearance requirements of the Federal Reports Act and OMB Circular A-40.

2. Data acquisition activities which have not been approved by the Office of Management and Budget but are in development for School Year 1979-80.

FOR FURTHER INFORMATION CONTACT:

Dr. Francis V. Corrigan, Room 3159-B, National Center for Education Statistics, 400 Maryland Avenue SW., Washington, D.C. 20202. (202) 245-1022.

SUPPLEMENTARY INFORMATION: The new paperwork control requirements seek to reduce the paperwork burden imposed on educational agencies and institutions by Federal agencies. The Secretary of HEW is required to develop procedures to review and approve all data acquisition activities by any Federal agencies: (i) Whenever the respondents are primarily educational agencies or institutions, and (ii) whenever the purpose of such activities is to request information needed for the management of, or the formulation of, policy related to Federal education programs or research or evaluation studies related to the implementation of Federal education programs.

Data acquisition activities subject to this review will no longer be subject to the Office of Management and Budget review under OMB A-40 procedures. A detailed plan is required for each data activity and each data activity is to be publicly announced by the February 15 preceding the school year in which the data are to be collected. There are two statutory "waiver" provisions:

(1) Under the general provision, the Secretary may waive the February 15 due date upon determining:

- There is an urgent need for the information; or
- A very unusual circumstance exists regarding the information (Section 400A(b)(2)(A) of the General Education Provisions Act).

(2) A limited exception authority exists for certain research and evaluation studies. Requirements may be waived for individual research or evaluation studies which are not used for individual project monitoring if the study is of a nonrecurring nature, participation by the educational agency is voluntary, the person-hours necessary to respond are not excessive and the plan has been published. (Section 400A(b)(5) of the General Education Provisions Act.)

Any procedures must be approved by the Federal Education Data Acquisition Council (FEDAC). FEDAC is to be composed of members representing

the public and the major agencies which collect and use education data, including one representative each from the Office of Management and Budget and the Office of Federal Statistical Policy and Standards, Department of Commerce. Additionally, FEDAC must be headed by "an individual from an agency which has expertise in data collection but which undertakes no major data collection of education data."

Numerous meetings are being held with other Federal agencies and representatives of educational agencies and institutions to discuss the paperwork control requirements. An outcome of this process will be a disclosure draft of proposed procedures that will be made available to the public for comment and obtainable at the address set out above. Other steps are being taken to appoint and convene FEDAC.

As of February 15, 1979, proposed data acquisition activities subject to the new legislation will be reviewed by FEDAC. They will no longer be reviewed under OMB A-40 procedures.

Until procedures have been finalized and approved by FEDAC, the Department of Health, Education, and Welfare is taking the following steps, in addition to the above, to comply with the spirit and intent of the paperwork control requirements.

LIST OF OMB APPROVED ACTIVITIES

I am publishing a list of known data acquisition activities planned for School Year 1979-80.

The bulk of the list is made up of activities already approved by the Office of Management and Budget. Because the enactment of the new requirements on November 1, 1978, left insufficient time for full review of these activities under FEDAC approval procedures, and because they have already been reviewed and approved by the Office of Management and Budget under review procedures similar to those required under the new Control of Paperwork Amendments of 1978. I determine that an unusual circumstance exists with respect to those activities thus permitting a waiver of the requirement in Section 400A(b)(2)(A) of the General Education Provisions Act. These activities may, therefore, be carried out in School Year 1979-80, as approved by the Office of Management and Budget. The Office of Management and Budget has carefully reviewed the data acquisition activities for burden and unnecessary information. For data activities of the Education Division of HEW and the Office for Civil Rights, data plans have also been reviewed under Education Data Acquisition Council (EDAC) procedures developed pursuant to Pub. L. 94-482. The Office of Management and Budget and EDAC requirements together have included most of the plan items now required by the new paperwork control requirements. Further, most Education Division data acquisition activities are reviewed with potential respondent groups.

OTHER ACTIVITIES UNDER DEVELOPMENT FOR SCHOOL YEAR 1979-80

The list also includes activities presently known to be under development for use in School Year 1979-80. The list is provided for information purposes.

Note, however, that FEDAC and the Department are still considering what activities are covered by these review procedures. Thus, some of the activities which are listed below may not ultimately be regarded as covered by this review (they will continue to be reviewed under OMB A-40 procedures).

I ask educational agencies and institutions to cooperate in the conduct of these data collection activities for School Year 1979-80.

Dated: February 9, 1979.

JOSEPH A. CALIFANO, Jr.,
*Secretary, Department of Health, Education, and Welfare.*

EDUCATION-RELATED DATA COLLECTION ACTIVITIES FOR SCHOOL YEAR 1979-80 ALREADY APPROVED BY OMB

| OMB approval No. /agency No. | Title | Type of respondents | Response burden |
|---|---|---|---|
| | DEPARTMENT OF AGRICULTURE | | |
| 040-R-3005 | National School Lunch Program | State Education Agencies and School Food Mgrs. | 38,390 |
| 040-R-3508 | School Breakfast and Nonfood Assistance Programs Regulations. | State Education School Food Mgrs. | 18,783 |
| 040-R-3511/FNS-67 | Application and Agreement—NSLP, SBP, and SNP. | School Administrations | 2,500 |
| 040-R-3661/FNS-086 | Civil Rights Compliance Review Institutions and Nonprofit Private Schools. | State and District Educational Agencies. | 2,500 |
| 040-R-3662 | Regulations—Determining Eligibility for Free and Reduced Price Meals and Free Milk in Schools. | State Educational Agencies. | 16,395 |
| 040-R-3704/FNS-129 | Agreement—Nonprofit Lunch Program (Commodity Only Schools). | | |
| 040-R-3899 | Regulations—Cash in Lieu of Commodities (School Feeding Program). | | |
| 040-R-3908/FNS-160 | Administrative Review Report (Schools, Charitable Institutions, Nutrition Programs for the Elderly)—Food Distribution Programs. | Schools and Institutions | 3,267 |
| 040-R-3963/FNS-796 | Guidelines for Financial Management Cost Based Accountability System—School Food Programs. | State Educational Agencies. | |
| 040-R-4046/FNS-42 | Nutrition Education and Training Program. | State Educational Agencies. | 1,000 |
| 040-R-4063 | Competitive Research Grants | Schools or Private Research. | 10,000 |
| 040-S-76024 | Nutritional Evaluation of the School Breakfast Program. | Students Food Managers and School Officials. | 2,700 |
| 040-S-78012/FNS-1045-47 and 1094 to 2000. | Evaluation of Interim National Lunch Program (NSLP) Regulations and Demonstration Projects. | Students, Food Managers, School Officials, parents, and faculty. | 13,680 |
| 040-S-78027 | Residential Child Care Institutions Survey. | School Administrators | 200 |
| 040-R-1535/FNS-10 | Report of Child Nutrition Operations | State Education Ag. Agencies. | 672 |
| 040-R-2470/FNS-806 806-1 | Monthly Report of the School Lunch, Breakfast, and Special Milk Programs; and worksheet. | Private Schools and Summer Camps. | 15,000 |
| 040-R-2952 | Part 215—Special Milk Program For Children. | State Education and School Food Managers. | 55,124 |
| 040-R-3565/FNS-360 | Federal Outlay Report | State Educational Agencies. | 18,960 |
| 040-R-3702/FNS-130 | Monthly Report of Lunch Service Operations in Commodity Only Schools. | School Administrators | 700 |
| 040-R-3708/FNS-127 | Application for Donated Commodities (Commodity Only Schools). | School Food Mgrs | 40 |
| 040-R-3787 | Procedure For Requesting Technical Assistance When Establishing, Maintaining & Expanding Food Service Facilities in Schools. | School Food Mgrs. | 240 |
| 040-R-3830/FNS-47 | Annual Report Of Food Service In Schools. | State Educational Agencies. | 630 |
| 040-R-4057/AD-623 | Application For Nutrition Education Demonstration and Development Projects—Grants. | State Educational Agencies. | |
| 040-R-4058 | Part 230—Food Service Equipment Assistance Program. | State Education Agencies and School Food Mgrs. | 8,848 |

| OMB approval No./agency No. | Title | Response burden (annual hours) |
|---|---|---|
| | DEPARTMENT OF JUSTICE | |
| 0755 043-R-0443 | Law Enforcement Education Program Application | 2,000 |
| 0755 043-R-0445 | LEEP Student Certification and Note | 33,300 |
| 0755 043-R-0446 | Law Enforcement Education Program Change in Student Status Card. | 335 |
| 0755 043-R-0452 | Statement of LEEP Account and Participants Certification Statement. | 12,210 |
| 0755 043-R-0488 | Summary and Certification Sheet | 4,200 |
| 0755 043-R-0520 | Internship—Institutional Application | 10 |
| 0755 043-R-0521 | Internship Program—Internship Student Application | 80 |
| 0755 043-R-0522 | Intern—Institutional Report | 20 |
| 0755 043-R-0525 | Categorical Grant Progress Report | 16,000 |
| 0755 043-R-0533 | Internship Evaluation Form | 250 |
| 0755 043-R-0571 | LEEP System Note Control Log | 2,000 |
| 0755 043-R-0572 | LEEP Rebate Credit Form | 125 |
| 0755 043-R-0600 | Application for Federal Assistance: Internship Program | 75 |
| 0755 043-R-0604 | LEEP Assessment Instrument | 1,160 |
| 0745 043-R-0417 | Application by Non-Immigrant Student For Extension of Stay, School Transfer or Permission To Accept Employment. | 36,600 |
| 0745 043-R-0458 | Notice to Student or Exchange Visitor and Request for Report or DSP-66. | 417 |
| 0745 043-R-0467 | Petition for Approval of School for Attendance by Non-Immigrant Students. | 1,000 |
| 0745 043-R-0397 | Certificate of Eligibility for Non-Immigrant F-L Student Status. | 110,000 |
| 0710 043-R-0580 | Application for Permit to Import Controlled Substances for Domestic and/or Scientific Purposes. | 41 |

| OMB approval No./agency No. | Title | Type of respondents | Response burden (annual manhours) |
|---|---|---|---|
| | NATIONAL CENTER FOR EDUCATION STATISTICS | | |
| 51-R-0560/NCES 2300-1 | Institutional Characteristics of colleges and universities. | Colleges & Universities | 1,650 |
| 51-R-1191 | Fast Response Survey | State and local education agencies, public and private elementary and secondary schools, colleges and universities and noncollegiate postsecondary schools with occupational programs. | 1,350 |
| 51-R-1221/NCES 2405 | Postsecondary Network Survey System. | Postsecondary education State Officials. | 456 |
| 51-R-1227 | Common core of Data Survey | State education agencies | 46,954 |
| 51-R-1247/NCES 2413 | Application for Federal Assistance (non-construction) capacity building for statistical activities in SEAS. | State education agencies | 4,000 |
| 51-R-1258 | Vocational Education Data Systems | State education agencies, former students and their employers. | 183,560 |
| 51-S-78013/NCES 2349-1 | Survey of Public Libraries | Public Libraries | 750 |
| 51-S-78015/NCES 2349-2 | Public School Library Media Centers, Fall 1978. | Public School Libraries | 1,300 |
| | NATIONAL INSTITUTE OF EDUCATION | | |
| 0411 051-S-78001 NIE-178A-B-C. | Pupil Survey and Measure of English Language Proficiency. | Parents, SES | 10,421 |
| 0411 051-S-78019 NIE 187 | Evaluation of Freestyle | SES, TES, Parents | 45,401 |
| 0411 051-S-78026 NIE 186 | National Metric Needs Assessment | SEA, LEA, Coll | 1,212 |
| 0411 051-S-78029 NIE 195 | Survey of High School Students and Counselors. | SES, SAS | 2,575 |
| 0411 051-S-78033 NIE 191 | Study of the Career Intern Program | IND, SNE, TES (non-public schools), TAE (non-public schools) Parents, AEA. | 2,004 |
| 0411 051-S-78021 NIE 196 | Evaluation of State Capacity Building Program in Dissemination. | SEA, Proj Directors | 621 |
| 0411 051-S-78037 NIE 206A-B. | Cigarette Smoking Among Teenagers; A Dual Survey. | IND (ages 12-19) | 1,261 |
| 0411 051-S-780038 NIE 197A-F. | Study of In-School Alternatives | SAS, PES, TAE, SES, Parents. | 82 |

| OMB approval No./agency No. | Title | Type of respondents | Response burden (annual manhours) |
|---|---|---|---|
| | NATIONAL INSTITUTE OF EDUCATION—Continued | | |
| 0411 051-R-0998 NIE 10 | Research Grants Application and Project Data Form. | IND—Researchers, SEA LEA, College & Universities Private Org. | 1,250 |
| 0411 051-R-1193 NIE 153 | Directory of ERIC Microfiche Collections Questionnaire. | Coll, FEA, LEA, NJC, NPO, NNE, NPE, OOS, SEA, School. | 65 |
| 0411 051-R-1254 NIE 194 | Cities in Schools Evaluation | SES, TAE, IND | 1,565 |
| | NATIONAL SCIENCE FOUNDATION | | |
| 99-R0013/NSF 98A | Final Project Report | Awardee Insts | 5,000 |
| 99-R0269/NSF 258 | Application for Consideration of Waiver of the Two-Year Foreign Residence Requirement of the Exchange Visitor Program. | Awardee Insts | 5 |
| 99-R0225/NSF 419 | School Nomination Form | High Schools | 10,000 |
| 99-R0274/NSF 672 | Special Foreign Currency Expenditure and Financial Report. | | |
| NSF 931 | Designation of Depository for Direct Deposit of Grant and/or Contract Funds. | Awardee Insts | |
| NSF 961 | Graduate Fellowship Support Grant Expenditure Report Form. | Awardee Insts | |
| NSF 666 | Interim Financial Report and Request for Advance of Funds, Special Foreign Currency. | Awardee Insts | |
| NSF Form Letter 123 | Assurance of Compliance with NSF Regulation Under Title VI of the Civil Rights Act of 1964. | Awardee Insts | |
| | Sample Forms for the Submission of Proposals to NSF: Proposal to the National Science Foundation (Cover Sheet), Summary Proposal Budget, Notice of Research Project (NSF Form 4) (Science Information Exchange). | Institutions Submitting Proposals. | |
| | Organization Management Information. | Awardee Insts | |
| 099-R0265/NA | Higher Education Panel, American Council on Education, Series of 6 Surveys Annually. | Institutions of Higher Education. | 1,000 for all 6 surveys |
| 099-R0279/NSF 411* | Scientific and Engineering Expenditures at universities and Colleges, FY 1979. | Universities, colleges and associated FFRDC's. | 14,600 |
| 099-R0282/NSF 724* | Scientific and Engineering Personnel Employed at Universities and Colleges, January 1980. | Universities, colleges and associated FFRDC's. | 23,800 |
| 099-R0290/NSF 558* | Earned Doctorates in the U.S | Ph.D. Recipients | 10,300 |
| 099-R0295/NSF 811-812* | Graduate Science Student Support and Post-doctorals, Fall 1979. | Graduate Deans and Department Chairman. | 25,000 |
| 099-R0311* | 1979 Survey of Science and Engineering Graduates. | Individuals | 4,000 |
| OMB No. 99R—304 | Public Service Science Residency Host Organization Statement. | Host organization | 100 |

*Probably fall outside of the area of concern of Pub. L. 95-561.

| | | | |
|---|---|---|---|
| | OFFICE FOR CIVIL RIGHTS | | |
| | NONE | | |
| | SOCIAL SECURITY ADMINISTRATION | | |
| 072-R0700 (SSA-1372) | Student's Statement Regarding School Attendance. | Individual | 66,667 |
| 072-R0701 (SSA-1383) | Student Reporting Form | Individual | 20,000 |
| 072-R0703 (SSA-1388) | Report of Student Beneficiary at End of School Year. | Individual & school officials. | 62,500 |
| 072-R0704 (SSA-1372A & 1372AF). | Certification by School Official | School Officials | 66,666 |
| 072-R0835 (SSA-1372F) | Student's Statement Regarding School Attendance Outside the U.S. | Individual | 375 |
| 072-R0905 (SSA-2434) | Statement Regarding Student's School Attendance. | Individual | 833 |
| 072-R0975 (SSA-1389) | Report of Student Beneficiary About to Attain Age 22. | Individual | 21,667 |
| 072-R1003 (SSA-2876) | Confirmation of School Attendance | School Official | 1,333 |
| 072-R1046 | Student's Statement Regarding Continuance of School Attendance. | Individual | 35,000 |

| OMB approval No./agency No. | Title | Type of respondents | Response burden (annual manhours) |
|---|---|---|---|
| | U.S. Office of Education | | |
| 51-S-77038/511 | Data Collection Forms in Response to Section 437, GEPA Calendar 1979 Collection. | SEA/LEA | 7,469 |
| 51-S-77039/575 1&2 | Financial Status & Performance Report for Emergency Adult Education Program for Indochina Refugees. | SEA/LEA | 650 |
| 51-S-77041/565 | Study of the ESEA Title I Migrant Program. | SEA/LEA | 24,066 |
| 51-S-77042/581 | Study to Determine the Projected Areas of Vocational Education Teacher Exchange. | SEA | 84 |
| 51-S-78015/2349-2 | Public School Library Media Centers, Fall. | SEA/LEA | 1,360 |
| 51-S-78023/624 | Follow-up Survey of WEAA Project Directors. | NPO/Ind/Public Agencies. | 50 |
| 51-S-78030/656-1,2 | Successful Sites Interview Schedules. | SEA/LEA | 397 |
| 51-S-78031/663 | Evaluation of Accreditation | IHE | 700 |
| 51-R-0177/4019 | Application for School Assistance in Federally Affected Areas (Title I, of P.L. 81-874). | SEA/LEA | 60,000 |
| 51-R-0333/7608/761, 7617 | Foreign Language Fellowships Application Packet and Related Forms—NDEA Title VI. | IHE | 500 |
| 51-R-0393/1261 | Transfer Credit Letter | IHE | 450 |
| 51-R-0423/1024 | Capital Contribution Application for Federal Loan for Institutional Capital Contribution. | IHE | 50 |
| 51-R-0441/1048 | Nomination for Graduate Fellowship. | IHE | 300 |
| 51-R-0477/646 | Fiscal-Operations Report/Application to Participate: CWS, SEOG, NDSL. | IHE | 132,000 |
| 51-R-0538/9052 | Report on Handicapped Children ADA in State Operated or Supported Schools. | SEA/LEA | 160 |
| 51-R-0539/7632 | Foreign Language Graduate Fellowship Forms (NDEA). | IHE | 12 |
| 51-R-0559/1130 | Guarantee Agency Monthly Report | IHE | 972 |
| 51-R-0573/1072 | Student Confirmation Report | IHE | 42,000 |
| 51-R-0575/1070 | Lender's Report on Guaranteed Student Loan. | IHE | 43,333 |
| 51-R-0578/1059 | Request for Institutional Eligibility for Programs Under the Higher Education Act of 1965, As Amended. | IHE | 500 |
| 51-R-0603/1131 | Institutional Application and Nomination for a National Teaching Fellowship. | IHE | 500 |
| 51-R-0605/1132 | Request for Deferment of Repayment of Loan—U.S. Loan Program for Cuban Students. | IHE | 59 |
| 51-R-0644/1144, 1143 | Certificate of Project Costs, Capitalized Interest—Higher Education Facilities Act. | IHE | 100 |
| 51-R-0648/1074 | Loan Transfer Statement | IHE | 1,500 |
| 51-R-0649/1154 | Student Application for Federally Insured Loan. | IHE | 710,000 |
| 51-R-0650/1151 & 1151-2 | Lenders Manifest for Federally Insured Student Loans. | IHE | 25,000 |
| 51-R-0651/1156 | Lenders Application for Contract of Federal Loan Insurance. | IHE | 40 |
| 51-R-0653/4038 | Report of Contract Awarded—State Education Agency Report of Minimum Requirements for School Construction. | SEA/LEA | 1,000 |
| 51-R-0671/1166 & 1166-2 | Lender's Call Report & Request for Payment of Interest-GSL. | IHE | 41,400 |
| 51-R-0685/1172 & 1172-1 | Request for Cancellation of Loan on Ground of Permanent and Total Disability and Medical Report. | IHE | 2,000 |
| 51-R-0711/7614 | Terminal Report for Holders of National Foreign Language Graduate Fellowship. | IHE | 212 |
| 51-R-0757/1197 | Upward Bound Financial Status and Performance Report. | IHE | 2,800 |
| 51-R-0748/1196 | Report on Current Upward Bound Student. | IHE | 3,323 |
| 51-R-0765/7627 | Application for the Faculty and Doctoral Dissertation Research Abroad Programs. | IHE | 2,887 |
| 51-R-0771/3118 | Application for College Library Resources Program Title II, Part A, HEA. | IHE | 2,700 |
| 51-R-0829/1193 | Application for Cooperative Education, Title IV Higher Education Act, As Amended. | IHE | |

| OMB approval No./agency No. | Title | Type of respondents | Response burden (annual manhours) |
|---|---|---|---|
| | U.S. OFFICE OF EDUCATION—Continued | | |
| 51-R-0856/1107 | Request for Advance Funds to Help Establish or Strengthen Reserve Funds. | IHE | 46 |
| 51-R-0865/1225 | College Retention of Former Upward Bound Students. | IHE | 450 |
| 51-R-0873/1189-1, 2, 3 | Guarantee Agency Request for Claims Paid. | IHE | 624 |
| 51-R-0875/1249 & 1249-2 | Request for Collection Assistance Under Federal Insured Student Loan Program. | IHE | 16,660 |
| 51-R-0886/1231 | Special Programs for the Disadvantaged Statistical Report. | SEA/LEA | 886 |
| 51-R-0925/4524 | Report on Title I, ESEA Comparability. | SEA/LEA | 168 |
| 51-R-0939/1260 | Student Loan Application Supplement. | IHE | 10,000 |
| 51-R-0961/255 | Application for Basic Educational Opportunity Grant. | IHE | 2,000,000 |
| 51-R-0964/7210 | Teacher Corps Intern Application | IHE | 333 |
| 51-R-0971/9037 | Application for Federal Assistance (nonconstruction) Education for the Handicapped Instructions and Supplementary Questionnaires. | SEA/LEA | 10,000 |
| 51-R-0972/267 | Standard Application (nonconstruction) for Parts B & C of the Indian Education Act. | SEA/LEA | 6,000 |
| 51-R-0975/255-1 | BEOG Student Eligibility Report | IHE | 1,500,000 |
| 51-R-0976/3176 | Application for Federal Assistance (nonconstruction) Vocation Education. | SEA/LEA | |
| 51-R-0977/295 | Application for Federal Assistance (nonconstruction Programs) Instruction for Right-to-Read Program. | SEA/LEA | |
| 51-R-0979/4473 | Standard Application Federal Assistance (nonconstruction) for Follow-Through Program. | SEA/LEA | 7,020 |
| 51-R-0980/298 | Application for Federal Assistance (nonconstruction Programs)—Instructions for Teacher Corps Program. | IHE | 12,000 |
| 51-R-0982/296 | Application for Federal Assistance-Title IV, Civil Rights Act. | SEA/LEA | 18,400 |
| 51-R-0983/255-2 | BEOG Supplemental Form for 1979-80 Award Period. | IHE | 100,000 |
| 51-R-0986/1049-1 | Application for Strengthening Developing Institutions. | IHE | 23,000 |
| 51-R-0989/304 | Request for Payment of BEOG Award. | IHE | 11,600 |
| 51-R-0990/304-1 | ADS Student Report (Request for Additional Payment of BEOG Award). | IHE | 10,000 |
| 51-R-0991/4524 A&B | ESEA Title I Comparability Report—Form A, General Information; Form B, Detailed School Data. | SEA/LEA | 42,667 |
| 51-R-0993/255-3 | Institutional Progress Report, BEOG Program. | IHE | 11,250 |
| 51-R-1005/326 | Standard Application (nonconstruction) for Environmental Education Program. | SEA/LEA/IHE | 40,000 |
| 51-R-1006/326-1 | Standard Application (short form) for Environmental Education. | SEA/LEA/IHE | |
| 51-R-1013/324 | Standard Application (nonconstruction) for Foreign Language and Area Studies. | IHE | 9,600 |
| 51-R-1018/1279 | Standard Application (short form)—Comprehensive Planning Grants and State Administration Funds. | SEA | 744 |
| 51-R-1019/335 | Education Professions Development Act Program Instructions for Application for Federal Assistance. | IHE | |
| 51-R-1021/269 | Application for Veterans' Cost-of-Instruction Payments to Institutions of Higher Education. | IHE | 2,400 |
| 51-R-1027/1280 | Standard Application for (nonconstruction) Special Community Service and Continuing Education Projects. | IHE/SEA | 8,000 |
| 51-R-1036/343 | Application for Federal Assistance (nonconstruction programs) Instruction for Educational Opportunity Centers. | IHE | |
| 51-R-1041/1285 | Application for CWS Grants for Students of American Samoa or the Trust Territory of the Pacific Islands. | IHE | 160 |

| OMB approval No./agency No. | Title | Type of respondents | Response burden (annual manhours) |
|---|---|---|---|
| | U.S. OFFICE OF EDUCATION—Continued | | |
| 51-R-1044/1288 | Application for State Student Incentive Grant Program. | SEA | 448 |
| 51-R-1046/356 | Application for Teacher Exchange Program. | IHE/SEA | 2,520 |
| 51-R-1052/360 | Financial Status and Performance Report—BOAE. | SEA/LEA | 8,800 |
| 51-R-1053/361 | Right to Read Financial and Performance Report. | SEA/LEA | 4,640 |
| 51-R-1055/255-4 | Basic Grant Program Student Validation Roster. | IHE | 25,000 |
| 51-R-1056/OE-362 | Standard Application (nonconstruction) for Migrant Education Program, ESEA, Title I. | SEA/LEA | |
| 51-R-1057/OE365 | Financial Status Report For Adult-Education State Programs. | SEA/LEA | |
| 51-R-1058/OE365-1 | Annual Performance Report For Adult Education State Grant Programs. | SEA/LEA | 4,480 |
| 51-R-1062/OE9039-1, 2 | Financial Status And Performance Report, P.L. 94-142 and P.L. 89-313. | SEA/LEA | 1,026 |
| 51-1064/OE1294 | A-102 Financial Status & Performance Reports—Discretionary Projects. | SEA/LEA | 12,600 |
| 51-R-1065/OE366 | Educational Opportunity Centers Program Financial Status and Performance Reports. | IHE | |
| 51-R-1076/OE269-3 | Veteran Student Enrollment Verification Report. | IHE | 2,700 |
| 51-R-1088/OE376 | Instructions For Completing The Financial Status Report And The Follow Through Grantee Performance Report. | SEA/LEA | 510 |
| 51-R-1089/OE362-1 | Financial And Performance Reports—Migrant Program Title I ESEA. | SEA/LEA | 940 |
| 51-R-1095 /OE380-1, 2 | Financial Status And Performance Reports—Title I, ESEA of 1965. | SEA/LEA | 1,033 |
| 51-R-1096/OE336 | Standard Application For (Non Construction) Library Research And Demonstration Program. | SEA/LEA | 6,000 |
| 51-R-1098/OE1288-1 | Financial Status And Performance Reports—State Student Incentive Grant Program. | SEA | 171 |
| 51-R-1110/OE5395 | Notification Of The Membership Of Adult Education State Advisory Councils. | SEA | 28 |
| 51-R-1114/OE349 | Application For Federal Assistance (Non Construction Programs)—Instructions For Ethnic Heritage Program. | IHE | |
| 51-R-1123/OE404 | Institutional Application For Public Service Education Program. | IHE | 3,400 |
| 51-R-1124/OE405 | Application For Domestic Mining And Mineral Fuel Conservation Fellowship. | IHE | 1,200 |
| 51-R-1137/OE1166-3 | Call Report For Unregulated And Specialized Lenders Under The Federally Insured Student Loan Program. | IHE | 338 |
| 51-R-1138/OE1308 | Certification As To Use Of Federally HEA Assisted Facilities Under Title VII of 1965. | IHE | 150 |
| 51-R-1141/OE411, 1 | Financial Status And Performance Reports Cooperative Education Program. | IHE | 1,550 |
| 51-R-1148/OE9047 | IHE Application For Handicapped Personnel Preparation. | SEA/LEA | 27,000 |
| 51-R-1154/OE1251 | Application For Special Programs For Students From Disadvantaged Backgrounds, HEA, As Amended. | IHE | 5,000 |
| 51-R-1156/OE425 | Standard Application For Consumer Education And Metric Education. | SEA/LEA/IHE | |
| 51-R-1157/OE1188 | Request For Deferment Of Repayment Because Of Armed Forces, Students, Peace Corps, Action Full-Time Volunteers. | IHE | 1,666 |
| 51-R-1161/OE | Instructions For Application For Federal Assistance-Women's Education Equity Act Program. | | |
| 51-R-1163/OE3600 | Application For Grant For Equipment & Materials To Improve Undergraduate Instruction. | IHE | 12,000 |
| 51-R-1170/OE449 | Application For Federal Assistance (Short Form)—Instructions For Arts Education Projects. | SEA/LEA | 4,500 |

| OMB approval No./agency No. | Title | Type of respondents | Response burden (annual manhours) |
|---|---|---|---|
| | U.S. OFFICE OF EDUCATION—Continued | | |
| 51-R-1171/OE444 | Application For Federal Assistance: Instruction For Part A, Title IV, P.L. 92-318. | SEA/LEA | 15,000 |
| 51-R-1174/OE453 | Application For Federal Assistance (Non Construction Programs)—Instructions For Community Education. | SEA/LEA/IHE | |
| 51-R-1175/OE116-1 | Application For Federal Assistance (Non Construction Programs) For Emergency School Aid Act, Title VII, P.L. 92-318 As Amended—Instructions & Supplementary. | SEA/LEA | 25,680 |
| 51-R-1176/OE116 | Application For Emergency School Aid Act: Non Profit Organizations. | NPO | 14,300 |
| 51-R-1195/OE9055 | Annual Program Plan Under Part B Of The Education Of The Handicapped. | SEA | 3,990 |
| 51-R-1198/OE501 | Application For Fellowship For Indian Students. | IHE | 2,000 |
| 51-R-1203/OE506 | Indian Student Enrollment Certification. | SEA/LEA | 1,625 |
| 51-R-1205/OE9058 | Report Of Handicapped Children Receiving Special Education And Related Services. | SEA | 57 |
| 51-R-1206/OE535-1 thru 3 | Financial Status, Performance, And State Advisory Council Reports For Title IV, ESEA, P.L. 93-380. | SEA | |
| 51-R-1207/OE547 | Standard Application For Library Training Programs, Title II-B, HEA 1965. | IHE | |
| 51-R-1212/OE543 | Nominations For The National Advisory Council on Indian Education. | SEA/LEA/IHE | 83 |
| 51-R-1213/OE4563 | Program Memorandum—Application, LSCA Titles I And II. | SEA | 1,680 |
| 51-R-1214/OE1329 | State Student Financial Assistance Training Programs Application. | SEA | 104 |
| 51-R-1215/OE9055-1 | Application For Federal Assistance (Non Construction Programs)—Education For The Handicapped—Preschool Incentive Grant. | SEA | 570 |
| 51-R-1222/OE574 | National Direct Report Of Defaulted Loans Student Loan Program. | IHE | 1,650 |
| 51-R-1225/OE553 | Endorsement Of Defaulted Notes (National Direct Student Loan Program. | IHE | 5,000 |
| 51-R-1226/OE405-1, 405-2 | Financial Status & Performance Reports For Domestic Mining & Mineral Fuel Conservation Fellowship Program. | IHE | 156 |
| 51-R-1229/592 | Strengthening Research Library Resources Program. | IHE | 3,200 |
| 51-R-1230/597 | Vocational Education Graduate Leadership Development Program Application. | SEA/LEA/IHE | 12,000 |
| 51-R-1232/593 | Vocational Education Teacher Certification Fellowship Program Application. | SEA/LEA/IHE | 20,000 |
| 51-R-1233/591 | Application for Graduate and Professional Fellowships and Institutional Grants. | IHE | 7,000 |
| 51-R-1234/9066 | Program Administrative Review, BEH. | SEA/LEA | 6,316 |
| 51-R-1236/1329-1 | Reporting for State Student Financial Assistance Training Program. | SEA | 288 |
| 51-R-1238/3092 | Financial Status and Performance Report for Community Service and Continuing Educational Programs Title IA, (State Grant). | SEA | 880 |
| 51-R-1239/606 | Financial Status and Performance Reports for College Library Resources, Library Training, and Equipment and Materials. | IHE | 24,000 |
| 51-R-1241/OE610 | State Plan For Education Information Centers. | SEA | 5,600 |
| 51-R-1242/OE621-1 | Lenders Application For Contract Of Federal Loan Insurance. | IHE | 87 |
| 51-R-1243/OE621-2 | Student Application For A HEAL Loan. | IHE | 4,760 |
| 51-R-1244/OE621-3 | HEAL Program Loan Transfer Statement. | IHE | 520 |
| 51-R-1245/OE623 | Validations Form-Basic Educational Opportunity Grant Program. | IHE | 51,000 |
| 51-R-1246/OE443-1 | Financial And Performance Report For Indochina Refugee Assistance Program. | SEA/LEA | |

| OMB approval No./agency No. | Title | Type of respondents | Response burden (annual manhours) |
|---|---|---|---|
| | U.S. Office of Education—Continued | | |
| 51-R-1248/OE9048 | Standard Application (Non-construction) For Gifted And Talented Program. | SEA/LEA | |
| 51-R-1249/OE576-3, 4, & 5 | State Plans And Reports For Vocational Education. | SEA | 74,100 |
| 51-R-1251/OE634 | State Plan For ESEA Title IV: Libraries And Learning Resources, Education, Innovation And Support. | SEA | 3,770 |
| 51-R-1252/OE639 | Lender's Manifest For Health Education Assistance Loans. | IHE | 520 |
| 51-R-1256/OE632 | Teacher Centers: Financial Status And Performance. | IHE | 960 |
| 51-R-1257/OE1286 | Institutional Release Of Funds/Request For Additional Funds: CWS & SEOG. | IHE | 500 |
| 51-R-1259/OE580 | Sharing Business Success | SEA/LEA/IHE | 1,630 |
| 51-R-1261/OE579 | ADS Student Validation Roster | IHE | 1,032 |
| 51-R-1262/OE560 | Adult Education Clearinghouse | SEA/LEA/IHE | 200 |
| | Veterans Administration | | |
| 076-R-0041 | Statement of Wages Paid to Trainee (Receiving Educational Benefits). | Employer-Trainer | 1,800 |
| 076-R-0050 | Authorization and Certification of Entrance and Reentrance Into Training (Vocational Rehabilitation). | Trainer | 3,000 |
| 076-R-0181 | Trainee Request For Leave (Vocational Rehabilitation). | Trainer or Authorized School Official. | 10,000 |
| 076-R-0267 | School Attendance Report | Claimant and School Official. | 3,500 |
| 076-R-0285 | Request For Training Supplies | Veteran and Trainer | 2,000 |
| 076-R-0289 | Annual Farm and Home Plan For Institutional On-Farm Course of Training (ch. 31). | Veteran and Instructor | 600 |
| 076-R-0290 | Farm Survey and Overall Farm and Home Plan-Self-Proprietor (ch 31, Title 38, U.S.C.). | Veteran and Instructor | 200 |
| 076-R-0327 | Enrollment Certification (Under chapter 34, or 35, Title 38, U.S.C.). | Certifying School Official. | 240,000 |
| 076-R-0423 | Vocational Placement Follow-up | VA Hospital Representative and Employment Agency Rep. | 300 |
| 076-R-0439 | Transfer of (Scholastic) Credit (Schools). | Certifying School Officer. | 334 |
| 076-R-0546 | Notice of Change in Student Status—Institutional Course Only. | Certifying School Official. | 20,833 |
| 076-R-0563 | Monthly Certification of Flight Training. | Student and Certifying School Official. | 60,000 |
| 076-R-0566 | Application For Educational Assistance By a Spouse or Surviving Spouse. | Applicant and Certifying School Official. | 2,000 |
| 076-R-0581 | Application and Enrollment Certification Individualized Tutorial Assistance. | Applicant, Tutor and Certifying School Official. | 15,000 |
| 076-R-0592 | Monthly Report of Training and Wages Under Chapter 31, Title 38, U.S.C. | Trainee and Trainer | 12,500 |
| 076-R-0594 | Monthly Certification of Training Under Chapter 34, Title 38, U.S.C. | Trainee and Training Establishment's Certifying Official. | 180,000 |
| 076-R-0600 | Compliance Report of Proprietary Institutions Apprenticeship Programs and On-The-Joab Training Programs. | Certifying Official of Institution or Training Establishment. | 3,125 |
| 076-R-0645 | Certification of Delivery of Advance Payment and Enrollment. | Certifying School Official. | 62,500 |
| 076-R-0666 | State Veterans Home Project Planning Report. | State Construction Official. | 80 |
| 076-R-0667 | Application For a Medical School Grant. | Institution Official and Program Director. | 1,200 |
| 076-R-0638 | Occupational Graduate Employment Questionnaire. | Graduate and School Official. | 650,000 |
| 076-R-0689 | Application For Education Loan | Student and Certifying School Official. | 100,000 |
| 076-R-0729 | Designation of Certifying Official | Certifying School Official(s) and Designating Official. | 3,000 |

| OMB approval No./agency No. | Title | Type of respondents | Response burden (annual manhours) |
|---|---|---|---|
| | PUBLIC HEALTH SERVICE | | |
| | *Health Resources Administration* | | |
| 68-R-1370 | Dental Team Practice Annual Progress Report. | Dental Schools | 26 |
| 68-R-1537 | Professional Nurse Traineeship Program (HRA-35 Series). | School of Nursing | 1,625 |
| 68-R-1657 | Annual Space Utilization and Enrollment Report for Nursing and Health Professions. | Nursing and Health Professions Schools. | 208 |
| | *National Institutes of Health* | | |
| 68-R-166 | Use of Self-Applied Fluoride Programs in Selected U.S. Schools. | Schools | 500 |
| | ASSISTANT SECRETARY FOR EDUCATION AND ASSISTANT SECRETARY FOR PLANNING AND EVALUATION | | |
| | The Education Amendments of 1978 direct the Secretary of Health, Education, and Welfare to conduct a comprehensive, three-year study of elementary and secondary school finance. The legislation provides the following framework for the study:. | | |
| | (a) Investigation of the availability of reliable and comparative data on the status of and trends in financing elementary and secondary education. | | |
| | (b) Conduct of studies necessary to understand and analyze the trends and problems affecting the financing of elementary and secondary education, both public and nonpublic, including the prospects for adequate financing during the next ten years. | | |
| | (c) Development of recommendations for federal policies. | | |
| | The legislation requires that the Secretary submit a study plan to Congress by March 1, 1979, and that this submission is to be followed by a 60-day waiting period. The study plan, which includes the research agenda, is in preparation; however, data requirements and estimates of response burden for data acquisition activities are not yet complete. | | |
| | Current plans for the three-year study include data acquisition activities that will enable studies in the following areas:. | | |
| | (1) Development of data bases for the biennial state school finance profiles, which are described in the National Center for Education Statistics' data acquisition plan. | | |
| | (2) Case studies of selected state school finance programs. | State school finance specialists. | |
| | (3) Case studies of the impact of school finance equalization on the cost and quality of educational programs and services. | School building data will be required, but may be collected at the school district level. | |
| | (4) Case studies of the determinants of enrollment and fiscal trends in nonpublic elementary and secondary schools. (This study will be coordinated with the National Center for Education Statistics' private school study described in that agency's data acquisition plan.). | Private school administrators. | |
| | (5) Case studies of the effects of school finance changes on school program management and governance. | State and local school administrators. | |
| | (6) Case studies of the impact of school finance changes on the distribution of tax burdens. | State and selected school districts. | |

| OMB approval No./agency No. | Title | Type of respondents | Response burden (annual manhours) |
|---|---|---|---|
| ASSISTANT SECRETARY FOR EDUCATION AND ASSISTANT SECRETARY FOR PLANNING AND EVALUATION—Continued | | | |
| | (7) Case studies of the fiscal implications of current education-related programs, including those administered by agencies other than those in the Education Division of HEW. | State and school district administrators. | |
| DEPARTMENT OF AGRICULTURE | | | |
| FNS | Study of Menu choice in the School lunch program. | Students and Parents | 26,000 |
| FNS | Assessment of the Costs and Impact of the Child Care Food Program. | SEA Staff child care providers. | 250 |
| FNS | National School Lunch and Breakfast Impact Study. | LEA Administrators, Principals, and Food Service Managers. | 9,850 |
| | | Students | 36,000 |
| FNS | Inventory and Needs Assessment of School Food Service Equipment. | Food Service Managers | 2,400 |
| FNS | Assessment of the Effectiveness of the National Education and Training Program. | LEA Administrators, Principals, Teachers, Parents, and Food Service Managers. | 1,500 |
| | | Students | 51,400 |
| NATIONAL CENTER FOR EDUCATIONAL STATISTICS | | | |
| | National Longitudinal Study of the High School Class of 1972: Fourth Follow-up Survey. | High school graduates | 20,000 |
| | High School and Beyond: Base-Year Survey. | High school students, teachers and administrators. | 128,000 |
| | Survey of the 50 States to assemble data for State school financing profiles report. | State agencies | 750 |
| | Survey of six States to assemble longitudinal/time series data on school finance. | State agencies | 90 |
| NCES 2349-3 | Private School Library Media Center Survey 1979-80 (LIBGIS V). | Directors of Private School Libraries and Media Centers. | 1,000 |
| NCES 2300.5 | College and University Library Survey, 1979 (LIBGIS V, HEGIS XIV). | Director of College and University Libraries. | 6,000 |
| DEPARTMENT OF AGRICULTURE (CONT.) | | | |
| AG | Assessment of Higher Education Faculty by Area of Specialization. | Schools of Food and Agricultural Science. | 5,700 |
| AG | Assessment of Higher Education Student Enrollment by Area of Specialization. | Schools of Food and Agricultural Science. | 11,500 |
| AG | Assessment of Ethnicity of Students Earning Degrees in Higher Education in Food and Agricultural Science. | Schools of Food and Agricultural Science. | 5,700 |
| DEPARTMENT OF THE INTERIOR | | | |
| B.I.A. | Student Enrollment System | B.I.A. School/Contract Schools. | 150 |
| B.I.A. | Staff and Experience Data Certification. | B.I.A. Staff | 4 |
| B.I.A. | Curriculum Data | B.I.A. Area and Agency Staff. | 50 |
| B.I.A. | Facilities Inventory | B.I.A. Area and Agency Staff. | 10 |
| B.I.A. | Student Assessment Data | B.I.A. Area and Agency Staff. | 5 |
| B.I.A. | Financial Information | B.I.A. Area and Agency Staff. | 5 |
| B.I.A. | Education of the Handicapped Information. | B.I.A. School Staff | 20 |
| B.I.A. | Higher Education Scholarship Data | B.I.A. Agency Staff and Area. | 15 |
| DEPARTMENT OF JUSTICE | | | |
| | Federal Equal Educational Opportunity Enforcement Survey | | 20,000 |

| OMB approval No./agency No. | Title | Type of respondents | Response burden (annual manhours) |
|---|---|---|---|
| | FUND FOR THE IMPROVEMENT OF POSTSECONDARY EDUCATION | | |
| ASE 0001 | "Comprehensive Program" | Government agencies (postsecondary education institutions. | 35,000 |
| | NATIONAL CENTER FOR EDUCATION STATISTICS | | |
| | Library Manpower Survey 1979-80 | Employers of Librarians and Directors of Library Schools. | 250 |
| | Museum Program Survey, 1979 | Directors of Museums and Related Institutions. | 2,000 |
| | Study of the Availability and Use of Instructional Television (ITV) and Other Communication Technologies in Institutions of Higher Education. | College and University Administrators faculty and students. | 9,200 |
| NCES 2325 | Survey of Private Schools | Private Elementary and Secondary Schools. | 10,000 |
| | Pilot Test—Course Offering and Enrollments. | Elementary and Secondary Schools. | 1,000 |
| NCES 2406 | Survey of Teacher Demand and Shortages. | Elementary and Secondary Education agencies and institutions. | 1,175 |
| NCES 2385 | Survey of 1978-79 College Graduates. | Colleges and Universities and 1978-79 college graduates. | 3,900 |
| | Survey of Local government Finances, School Systems 1979. | State education agencies | 2,500 |
| NCES 2358 | Survey of Noncollegiate Postsecondary Schools. | Career Training Schools | 1,083 |
| NCES 2390 | Survey of Adult Education by Home Study. | Correspondence Schools | 300 |
| NCES 2300-8 | Survey of Adult and Continuing Education in Colleges and Universities. | Colleges and Universities. | 960 |
| | Survey of Adult Education in Community Organizations. | Nonprofit, Community based agencies. | 1,700 |
| NCES 2300-2.1 | Degrees and Other Formal Awards Conferred Between July 1, 1978 and June 30, 1979. | Colleges and Universities. | 11,984 |
| NCES 2300-2.3 | Fall Enrollment and Compliance Report of Institutions of Higher Education. | Colleges and Universities. | 4,695 |
| NCES 2300-2.8 | Residence and Migration of College Students, Fall 1979. | Colleges and Universities. | 4,695 |
| NCES 2300-3 | Salaries, Tenure and Fringe Benefits of Full-Time Instructional Faculty in Institutions of Higher Education, 1978-79. | Colleges and Universities. | 25,040 |
| NCES 2300-4 | Financial Statistics of Institutions of Higher Education for Fiscal Year Ending 1979. | Colleges and Universities. | 7,825 |
| | Uses of Higher Education General Information Survey Data. | State and Federal agencies, Professional, Institutions of Higher Education, independent research agencies. | 675 |
| 51-R-1194; 51-R-1204; NCES 2388 series; NCES 2371 series. | National Assessment of Education Progress. | Public and Private elementary school officials and students, 17-year-old high school early graduates and dropouts, household respondents and young adults. | 43,105 |
| | NATIONAL INSTITUTE OF EDUCATION | | |
| 190 | High School Follow-up Survey | Public and Private TES, IND; SES; OSA; SEA. | 895 |
| 198 | Evaluation of Project EXCEL | Students, Parents, Teachers/Administrators, and Other Community. | 2,400 |
| 192 | Assessment of Minority & Women's Program. | Postsecondary Institutions and Employees; nonprofit orgs.; students in postsecondary orgs. | 300 |

| OMB approval No./agency No. | Title | Type of respondents | Response burden (annual manhours) |
|---|---|---|---|
| | NATIONAL INSTITUTE OF EDUCATION—Continued | | |
| 200 | Studies of Career Information Resources and Systems for Secondary School Students (A National Assessment). | Counselors, Teachers, and Students. | 6,760 |
| 201 | National Educational Practice File Search Appraisal. | IND (Practitioners) | 400 |
| 202 | Successful Schools and Staff Development. | Administrators, Teachers, School Board, and Parents. | 75 |
| 203 | Criteria for Effective Staff Development. | Administrators, Teachers, Parents, School Board, & Students. | 33 |
| 204 | Bilingual Inservice Teacher Training. | Teachers, Students, Administrators, Relevant others. | 50 |
| 205 | Morale, Incentives, and Job Satisfaction in Teachers. | Elementary and Secondary School Teachers and Principals. | 200 |
| 207 | Worker Education and Training Study. | Adult Workers | 600 |
| 209 | Teachers Who Change | Elementary and Secondary School Teachers. | 200 |
| 210 | The Nature and Extent of Adult Learning in Work and Nonwork Settings. | Adults in Workforce, General Adult Population in Learning Activities; Instructors, Teachers, Administrators, Personnel Officers, Counselors. | 3,000 |
| 211 | Productivity Research Program: Managerial Control and School Productivity Project. | School Prin., School Dist. Superintendent. | 450 |
| 212 | Study of Minimum Competency Testing Programs. | SEA, LEA, PAR, PRIN, STU (public, elementary and secondary), TES. | 1,980 |
| 213 | Improving Practitioner Use of Tests | LEA, PRIN, Teachers | 81 |
| 214 | Evaluation of the University of Mid-America. | Employees in Postsecondary Institutions. | 200 |
| 215 | ERIC: Use and Impact | IND | 1,000 |
| 216 | Studies of Inter-organizational Coordination of Dissemination. | Administrators and Managers in Dissemination Support Orgs. | 500 |
| 217 | Study of Educational Information Usage: Needs, Acquisition and Uses of Information by Educational Personnel. | Teachers, PRIN, School Administrators, supervisors, and board members. | 500 |
| 218 | Design for an Evaluation of the R&D Exchange. | Staff of LEAs, ISAs, SEAs. | 100 |
| 219 | Financing of Community Colleges | Community Colleges | 500 |
| 220 | Finance and Governance of Special Education. | SEAs and LEAs Depts of Ed. | 525 |
| 221 | School Size Study | Elementary and Secondary Schools. | 750 |
| 222 | Study of Human Resources Development in the Private Sector. | Adult Workers | 800 |
| 223 | Directory of Inschool Alternatives to Suspension. | LEAs | 150 |
| 224 | Youth Budget: Unstructured Interviews with Public Officials. | Federal and Local Agencies. | 100 |
| 225 | Study of Education and Work Councils (Structured Interviews). | LEAs and IND | 400 |
| 226 | Youth, Pregnancy and Parenthood: The Educational Implications. | LEAs, Teachers, IND, Parents, Principals School, Public Elem. and Sec. Schools, Students—Elem. and Sec. | 600 |
| 227 | Survey of Community School Projects. | LEAs, Principals, and Other Community Ed Administrators. | 1,000 |
| 228 | Study of Exemplary PACs | LEAs, and Parents | 1,500 |
| 229 | Study of Educational Needs in Puerto Rico. | Parents | 3,000 |
| | | Public/elem./sec. schools. | 1,000 |
| | | Students, pub. elem./sec. schools. | 3,000 |
| | | Teachers, pub. elem./sec. schools. | 2,000 |
| | | Employers | 1,000 |

| OMB approval No./agency No. | Title | Type of respondents | Response burden (annual manhours) |
|---|---|---|---|
| | NATIONAL INSTITUTE OF EDUCATION—Continued | | |
| 230 | Study of Bilingual Program Operations. | Parents | 2,000 |
| | | Pub. elem./sec. schools | 4,000 |
| | | Students, pub. elem./sec. schools. | 50,000 |
| | | Teachers, pub. elem./sec. schools. | 10,000 |
| | | Non-public, non-profit elem./sec. schools. | 1,000 |
| 231 | Evaluation Approaches in Bilingual Education. | Local Educ. Agencies | 2,000 |
| | | State Educ. Agencies | 60 |
| | NATIONAL SCIENCE FOUNDATION | | |
| | Survey of instructional scientific equipment in science and engineering. | Faculty and administrators of higher education. institutions. | 100 |
| | Participation in Undergraduate Reserch Participation and Student Science Training by race and sex. | Faculty, students and administrators of colleges and universities. | 50 |
| | Program Evaluation Surveys and interviews with personnel involved with LOCI and CAUSE projects. | Faculty, administrators, students. | 200 |
| | Survey of science offerings and enrollments in institutions of higher education. | Faculty, administrators, counselors, students. | 200 |
| | Survey of science course offerings, training programs, and/or counselling programs offered to women, minorities, handicapped, and adolescents. | Faculty, administrators, counselors. | 100 |
| | Survey of actual and potential NSF grant reviewers pertaining to qualifications and experience. | Faculty of higher education. | 200 |
| | Program evaluation surveys and interviews at institutions holding NSF Science Education grants. | Faculty; adminstrators, students. | 100 |
| | Survey of Science, Mathematics and Social Studies Education (K-12) (series of 6 surveys). | Teachers, principals, supervisors. | 200 |
| | Research Participation and Other Characteristics of Science and Engineering Faculty. | Heads of Science and Engineering Depts. In Ph.D. granting institutions. | 2,000 |
| | Academic R&D Price Deflator Project-National Sample of Institute. | Major Reserch Universities. | 2,400 |
| | OFFICE FOR CIVIL RIGHTS | | |
| OS/CR-203 | Fall, 1979 Vocational Education Civil Rights Survey. | Comp. and Voc. High Schools; Area Voc. Ed. Schools; Tech. Institutes; Jr. & Comm. Colleges. | 64,400 |
| OS/CR-301 | Local Placement Agency Survey for the Dependent and Delinquent. | State and Local Agencies. | Not known at this time. |
| OS/CR-302 | Special Purpose Facilities Civil Rights Survey for Dependent or Delinquent Children. | Institutions | Not known at this time. |
| OS/CR-532-1 | Supplemental Information for Local Education Agency Grants Under the Emergency School Aid Act—School System Summary Report. | Applicant LEA's | 163 |
| OS/CR-532-2 | Supplemental Information for Local Education Agency Grants Under Schools in the Emergency School Aid Act—Individual School Report. | Applicant LEA's | 39,000 |
| None | Discipline Records to be Maintained and Retained. | LEA's | Not known at this time. |
| | SOCIAL SECURITY ADMINISTRATION | | |
| | NONE | | |

| OMB approval No./agency No. | Title | Type of respondents | Response burden (annual manhours) |
|---|---|---|---|
| | U.S. OFFICE OF EDUCATION | | |
| | Financial Status and Performance Report (Parts B and C), Indian Education. | Indian Tribes/ORG/ Institutions. | 583 |
| | Financial Status and Performance Report (Part A) Indian Education. | LEA | 4,800 |
| 4561 | Application for Grants Under Bilingual Education Program. | SEA/LEA/IHE/NPO | 120,000 |
| | Financial Status and Performance Report for Bilingual Education Programs. | SEA/LEA/IHE/NPO | 34,000 |
| | Fellowship Recipient Resume | Indian Fellowship Recipients. | 1,550 |
| | Bilingual Education Fellowship Program Contract. | Individuals | 387 |
| | Teacher Corp Inservice Teacher Education Survey. | IHE/LEA/Parents | 3,750 |
| | Financial Status and Performance Reports for LSCA Titles I and III. | State Library Agencies | 1,710 |
| | Evaluation—Women's Educational Equity Act Program. | NPO/Individuals/Public Agencies. | 1,000 |
| | Impact Study of Instructional Materials Information Systems Efforts of the BEH. | SEA/LEA/Colleges | 86 |
| | Handicapped Preschool Incentive Grant Performance and Financial Report. | SEA | 456 |
| | Monitoring and Performance Report for P.L. 89-313. | SEA | 840 |
| 609 | HCEEP Demonstration and State Implementation Project Profiles. | SEA/LEA/Colleges NPO. | 408 |
| 9037-1 | Financial Status Report and Performance Report—BEH. | SEA/LEA/Colleges | 14,706 |
| 116-2 | Financial Status and Performance Report—EEOP. | SEA/LEA/NPO | |
| 116-2-1 | Districtwide Advisory Committee Report. | IHE/Public Agencies | 15,523 |
| 116-2-2 | Student Advisory Committee Report. | IHE/Public Agencies | |
| 4376-1 | Annual Report of Children in Institutions Operated by a State Agency for Neglected or Delinquent Children. Correctional Institutions, ESEA, Title I. | SEA | 1,600 |
| 4376-1 | Annual Survey of Children in Local Institutions for Neglected or Delinquent Children in Correctional Institutions, ESEA, Title I. | SEA/LEA | 1,600 |
| | SEA Monitoring and Enforcement Plan. | SEA | 7,000 |
| | Application for Indochina Refugee Children Assistance. | SEA/Guam/DC/Am. Samoa/Trust Terr. | 6,000 |
| | State Report on Exemplary Special Education Programs for Indochina Refugee Students. | SEA/Guam/DC/Am. Samoa/Trust Terr. | 5,000 |
| 417 | Single State Application—All OE State Administered Program, GEPA, Section 435, P.L. 95-561. | SEA | 23 |
| 681 | State Plan, ESEA, Title V, Part B | SEA | 5,700 |
| 681-1 | Financial Status and Performance Report, ESEA, Title V, Part B. | SEA | 5,700 |
| 652 | Adult Education State Plans | SEA | 3,819 |
| 669 | Vocational Education Sex Equity WEECN Clearinghouse Form. | Sex Equity Coor | 570 |
| 355 | Summary of Assistance and Instructions to Applicants; Data to Determine eligibility and Compute Maximum Grant. | LEA/SEA | 23,000 |
| 355-1 | Instructions for Application for Federal Assistance, Assurances. | LEA/SEA | 1,800 |
| 423 | Instruction and Supplementary Questionnaire—Application for Federal Assistance (Short Form). | LEA/SEA | 1,250 |
| | Career Education Program: Instructions for Application for Federal Assistance. | SEA/LEA/IHE/NPO | 32,000 |
| | Youth Employment Program: Instructions for Application for Federal Assistance. | SEA/LEA/IHE/NPO | 20,000 |
| | Career Education Discretionary Program: Financial Status and Performance Reports. | SEA/LEA/IHE/NPO | 1,400 |
| | Career Education State Allotment Program: Financial Status and Annual Performance Reports. | SEA | 570 |
| | Youth Employment Program: Financial Status and Performance Reports. | SEA/LEA/IHE/NPO | 500 |

| OMB approval No./agency No. | Title | Type of respondents | Response burden (annual manhours) |
|---|---|---|---|
| | U.S. OFFICE OF EDUCATION—Continued | | |
| HEW 606-T | Preapplication for Federal Assistance | LEA/SEA | To be determined. |
| HEW 609-T/HEW 608-T | Application for Federal Assistance (for Construction Program). | LEA/SEA | To be determined. |
| SF 424 | Federal Assistance (SAFA) | LEA/SEA | To be determined. |
| HEW 608-T | Federal Assistance (pages 2 and 3) (SAFA). | LEA/SEA | To be determined. |
| | Tracking Study of OIE Fellowship Graduates. | OIE Fellowship Graduates. | 200 |
| | Western States Adult Education Survey. | Selected Indian Adults | 6,000 |
| | Alaska Adult Education Survey (Indian Education). | Selected Indian Adults | 300 |
| | Follow-up Impact Study of Key Themes of the National Center. | LEA/SEA/Teachers Students. | 353 |
| | Dissemination and Utilization Follow-up Study. | SEA/LEA/IHE | 457 |
| | New and Changing Occupations | SEA/LEA/IHE | 457 |
| | Curricula Available for New and Changing Occupations. | SEA/LEA/IHE | 457 |
| | Investigation of the Correlates of Placement in Vocational Education. | SEA/LEA/IHE | 457 |
| | Examining Vocational Education Outcomes. | SEA/LEA/IHE | 457 |
| | Comprehensive Evaluation of Programs Funded under The Community Schools Act. | SEA/LEA/IHE | 190 |
| 575 | Application for the Emergency Adult Education Program for Indochina Refugees. | SEA/LEA | 3,400 |
| | Development of Entrepreneurship Training Components for Vocational Education. | LEA/SEA | 115 |
| | Procedures for Utilizing Volunteers to Improve Vocational Education in Urban Areas. | LEA, SEA/IHE, Business & Indus. | 185 |
| | Monograph of Bilingual Vocational Instructor Competencies. | IHE/Individuals | 215 |
| | Conversion of Armed Services Diesel Instructional Materials for Use in Vocational Education Programs. | IHE/LEA | 30 |
| | Development of Health and Safety Modules for Vocational Education. | IHE/LEA | 30 |
| | Resource Development and Training for Improvement of Related Instruction in Apprenticeship Programs. | Teachers | 750 |
| | Development of an Outreach Program to Attract Women into Male-intensive Vocational Education Programs. | SEA/Employers/ Individuals. | 557 |
| | Modularized Curriculum for Energy Conservation Technical Programs. | Postsecondary Students. | 400 |
| | Test for English Proficiency for Adults of Limited English Speaking Ability. | Individuals | 400 |
| | Individual Education Plans for Handicapped Students in Vocational Education. | Students | 400 |
| | Field Testing Vocational Education Curriculum Specialist Materials. | IHE/SEA/LEA | 75 |
| | Development of Competency Measures for Vocational Skill Areas. | Students/Supervisory Personnel. | 175 |
| | Evaluation of Industry-Education-Labor (I-E-L) Collaboration in Improving the Quality and Accessibility of Occupational Education. | SEA/LEA/ORG | 414 |
| | Developing Criteria for and Monitoring the Activities of Industry-Education-Labor Action Councils to Bring Education and the Marketplace into Phase as a Research Basis for Immediate and Future Occupational Planning Purposes. | SEA/LEA/ORG | 414 |
| | Verification and Implementation of Program Standards for Vocational Home Economics Education. | SEA/LEA | 357 |

| OMB approval No./agency No. | Title | Type of respondents | Response burden (annual manhours) |
|---|---|---|---|
| | U.S. Office of Education—Continued | | |
| | Design of a Vocational Education Program for the Training and Retraining of Railroad Industry Employees. | SEA/IHE | 120 |
| | Vocational Education Personnel Development in the Pacific Basin. | IHE | 30 |
| | Development of Vocational Education Model for Linking Agencies Serving the Handicapped. | SEA/LEA/ORG | 129 |
| | Development of a Catalog of Modification and Adaptations of Vocational Equipment for Serving the Handicapped. | SEA/LEA | 357 |
| OE-629 | Inexpensive Book Distribution Program (Right to Read). | Subcontractors, Teachers, Librarians, Students, Parents, Volunteers, Publishers/Suppliers. | To Be Determined. |
| OE | Special Emphasis (Right to Read) | Project Directors, Principals, Reading Specialists, Experimental and Control Classroom Teachers, Students, Parents, Librarians. | To Be Determined. |
| | An Assessment of the Operation of the Adult Education Act State Grant Program. | LEA, SEA, Dropouts, Immigrants, Elderly, Poor, Disadvantaged, Limited/Non English Speaking, Handicapped Program Developers. | To Be Determined. |
| | Teacher Corps Program 78 and 79 Evaluation. | Parents, Policy Boards, Interns/Volunteers, Council Principals, Local Project Staff, IHE Faculty, LEA, SEA. | To Be Determined. |
| | An Analysis of the Bureau of the Education of Handicapped Inservice Training. | IHEs, LEAs, SEAs, Private Nonprofit Organizations, Teachers, Administrators. | To Be Determined. |
| | Evaluation of the Part C Program and Part B Capacity Building Projects Under Public Law 92-318 (Indian Education). | SEAs, LEAs, Indian Tribal Leaders, Indian Organizations, Indian Adults. | To Be Determined. |
| | An Assessment of the Capacity Building Accomplishments of the Regional Resources Centers (Handicapped). | RRC Directors SEA Director of Special Education, LEA Director of Special Education, School Level, Staff Parents. | To Be Determined. |
| | An Assessment of Vocational Education Programs for Indians. | SEA and LEA Administrators, Project Staff, Students, Parents. | To Be Determined. |
| | An Assessment of State and Local Planning in the Programs for Gifted and Talented Children. | SEA and LEA Administrators, Project Staff Students, IHE. | To Be Determined. |
| | Evaluation of the Alcohol and Drug Abuse Education Program. | SEA and LEA Administrators, Project Staff, Students, Parents. | To Be Determined. |
| | Evaluation of the Women's Educational Equity Act Program. | SEA, LEA, IHE Project Staff, Students, Community. | To Be Determined. |
| | Assessment of Bilingual Vocational Training Program. | SEA, LEA, IHE, Teachers, Project Staff, Students. | To Be Determined. |
| OE-677 | Alternative Measures Comparability | District and School Staff (LEA). | To Be Determined. |
| OE 642-1 thru 8 | Parent Involvement in Four Federal Programs. | Federal Program Coordinators (LEA), elementary students and parents, elementary school staff (LEA). | To Be Determined. |
| | Successful ESAA Programs Supporting Intergroup Relations Activities. | 5th grade students, elementary school staff, district staff, and school board ESAA parents (LEA). | To Be Determined. |

| OMB approval No./agency No. | Title | Type of respondents | Response burden (annual manhours) |
|---|---|---|---|
| | U.S. OFFICE OF EDUCATION—Continued | | |
| | Title I State Evaluation Reports | State ESEA Title I Coordinators. | To Be Determined. |
| OE-661 | Title VII, ESEA Teacher Teaching Programs. | Administrators and Participants in Higher Ed. Bilingual Teacher Training Programs. | To Be Determined. |
| OE-679 | The Nature and Effects of Selected Title I Implementation Strategies. | District and School Staff (LEA). | To Be Determined. |
| OE-682-1-2-3 | Evaluation Practices and Procedures. | District and School Staff (LEA). | To Be Determined. |
| OE-683-1-2 | Sustaining Effects Student Follow-Up. | District and School Staff (LEA) Junior High Students. | To Be Determined. |
| OE-685-1-2-3-4 | Reassessment of Effects on Students Associated with Follow Through Models. | District and School Staff (LEA). | To Be Determined. |
| OE-662 | Supplementary Training Available for Follow Through Parents and Aides. | Parent Recipients of Follow Through Training Funds. | To Be Determined. |
| | Study of the Role of ESAA Funding in Newly Desegragating and Pre-Implementation School Districts. | District administrative staff, School administrative staff, Teachers, Desegragation experts. | To Be Determined. |
| | Study of ESAA Civil Rights Eligibility Requirements and of Second Generation Desegregation Problems. | District administrative staff, School administrative staff, Teachers, Civil Rights activists, other desegregation experts. | To Be Determined. |
| | Study of Title VII Inservice Teacher Training Programs. | District and School Staff (LEA), Staff of Title VII Training Resource Centers. | To Be Determined. |
| | Assessment of the ESAA-TV Program Through An Examination of its Production, Distribution, and Financing. | ESAA TV Producers Managers, Project Advisory Committee Financial Officers, Distributors, and Gatekeepers. | To Be Determined. |
| | An Evaluation of Title I of the Library Services and Construction Act. | Chief State School Officers, State Librarian and Staff, State Advisory Council Library and LCAI Project personnel, Users and Non-Users. | To Be Determined. |
| OE-637 | A Study of the Impact of Student Financial Aid Programs—Phase III. | 175 Institutions X 125 Students. | 7,292 |
| | Evaluation of Language Training and Area Studies Program. | Graduates | 3,000 |
| | A Study of the Development Institutions Program. | Institutions | 1,600 |
| | Evaluation of the Special Services for Disadvantaged Students Program. | IHE/Students/Project Staff. | 17,161 |
| | State Regulatory Agency Study of the Institutional Report Form. | State Post-Secondary Regulatory and Licensing Agency. | 1,000 |
| | Survey of Participation of Nonpublic Schools in Federal Education Programs. | LEA/SEA/Non-Public Schools. | 65,000 |
| | VETERANS ADMINISTRATION | | |
| | None | | |
| | PUBLIC HEALTH SERVICE | | |
| | *Health Resources Administration* | | |
| | Evaluation of the Impact of P.L. 94-484 on the Distribution of Residencies. | Medical Schools Residency Programs. | 450 |

| OMB approval No./agency No. | Title | Type of respondents | Response burden (annual manhours) |
|---|---|---|---|
| | DEPARTMENT OF DEFENSE | | |
| | Experiential Learning Feasibility Study. | College Academic Registrars. | 2,000 |
| | Survey of Selected Colleges and Universities to Determine the Completion Rates of Students Enrolled in DANTES Independent Study Courses. | College Registrars2,000.. | 2,000 |
| | Survey of Selected professional and Teaching Associations to Determine Appropriate Curricula for Department of Defense Dependent Schools. | Professional Curriculum and Teaching Associations. | 300 |
| | Survey of Academic Policies and Procedures of Colleges and Universities Conducting Postsecondary Education on Military Bases. | College Academic Administrators. | 5,000 |
| | Survey of Randomly Selected School Systems Serving Cities of our 100,000 Population to Obtain Basic Salary Data for Use in Establishing Salary Schedules for Teachers in the Department of Defense Dependents Schools System. | High School Administrators. | 500 |
| | Survey of Colleges and Universities to Determine if They Meet Eligibility Criteria for Membership in the Servicemen's Opportunity Colleges (SOC). | College Registrars..... | 2,800 |
| | Data Collection and Reporting for Re-norming of New and Revised Defense Activity for Non-traditional Education Support (DANTES) Subject Standardized Tests. | College Department Chairmen. | 350 |
| | Survey of Selected Colleges and Universities to Determine Acceptance of New and Revised DANTES Subject Standardized Tests. | College Department Chairmen. | 150 |
| | Survey of Selected High Schools to Determine the Need for and potential Acceptance of High School Level DANTES Subject Standardized Tests. | High School Administrators. | 200 |
| | Survey of Selected Colleges and Universities to Obtain Information About Accredited Courses for Inclusion in the DANTES Independent Study Catalog. | National University Extension Association School Administrators. | 1,000 |
| | Computer Lesson Grading Feasibility Study. | College Academic Administrators. | 1,000 |

[FR Doc. 79-4799 Filed 2-14-79; 8:45 am]

[4110-07-M]

## HEALTH, EDUCATION, AND WELFARE

### Social Security Administration

### FEDERAL OLD-AGE, SURVIVORS, AND DISABILITY INSURANCE SUPPLEMENTAL SECURITY INCOME FOR THE AGED, BLIND, AND DISABLED

#### Availability of Draft Regulations

The Commissioner of Social Security gives notice of the availability of draft regulations identified as Regulations No. 4, Subpart P and Regulations No. 16, Subpart I. The draft regulations concern the program of disability insurance benefits under title II of the Social Security Act and the program of aid to the disabled under title XVI of the Act. The draft was developed to: (1) further define the evidence that the Social Security Administration (SSA) needs to determine whether a person's impairment is equal in severity to an impairment listed in the regulations (in the Appendix to Subpart P) and is therefore disabled for benefit purposes under title II and XVI; and (2) eliminate the requirement under title II that SSA be promptly notified when a beneficiary is released from a hospital or similar institution.

SSA has received a request for a copy of this draft from an interested member of the public. In order to make all other interested parties equally aware that the draft is available to those who wish to request a copy, SSA is publishing this notice. However, since the draft proposal would merely conform the disability regulations to policies that are already in effect, and which are found in existing operating instructions, SSA will not publish them at this time or in their present form. Instead, the changes will be included in a proposed revision of other disability regulations to be published later.

A copy of the draft regulations can be obtained by writing to the Office of Regulations, Office of Operational Policy and Procedures, Social Security Administration, 6401 Security Boulevard, Baltimore, Maryland 21235.

Dated: February 6, 1979.

STANFORD G. ROSS,
*Commissioner of Social Security.*

[FR Doc. 79-4993 Filed 2-14-79; 8:45 am]

# sunshine act meetings

This section of the FEDERAL REGISTER contains notices of meetings published under the "Government in the Sunshine Act" (Pub. L. 94-409) 5 U.S.C. 552b(e)(3)

CONTENTS


| | Items |
|---|---|
| Federal Energy Regulatory Commission | 1 |
| Federal Mine Safety and Health Review Commission | 2 |
| National Transportation Safety Board | 3 |
| Postal Rate Commission | 4 |


[6740-02-M]

1

FEDERAL ENERGY REGULATORY COMMISSION.

"FEDERAL REGISTER" CITATION OF PREVIOUS ANNOUNCEMENT: Published February 12, 1979, 44 FR 8965.

PREVIOUSLY ANNOUNCED TIME AND DATE OF MEETING: 10 a.m., February 14, 1979.

CHANGE IN THE MEETING: The following items have been added:

ITEM NUMBER, DOCKET NUMBER, AND COMPANY

CAG-14. OR 79-1, Williams Brothers Pipeline Co.
CI-4. RI78-18, Natural Gas Pipeline Co. of America.

KENNETH F. PLUMB,
*Secretary.*

[S-113-78 Filed 2-13-79; 2:56 pm]

[6735-01-M]

2

FEBRUARY 13, 1979.

FEDERAL MINE SAFETY AND HEALTH REVIEW COMMISSION.

TIME AND DATE: 10 a.m., February 20, 1979.

PLACE: Room 600, 1730 K Street NW., Washington, D.C.

STATUS: Open.

MATTER TO BE CONSIDERED: *Climax Molybdenum Company* v. *Secretary of Labor*, Docket Nos. DENV 79-3-M, etc. (petition for discretionary review).

CONTACT PERSON FOR MORE INFORMATION:

Joanne Kelley, 202-653-5632.

[S-314-79 Filed 2-13-79; 3:31 pm]

[4910-58-M]

3

NATIONAL TRANSPORTATION SAFETY BOARD.

TIME AND DATE: 9 a.m., Thursday, February 22, 1979 (NM-79-6).

PLACE: NTSB board room, 800 Independence Avenue, Washington, D.C. 20594.

STATUS: The first four items will be open to the public; the fifth item will be closed under exemption 10 of the Government in the Sunshine Act.

MATTERS TO BE CONSIDERED:

1. *Aircraft Accident Report*—North Central Airlines, Inc., Convair 580, M44825C, Kalamazoo Municipal Airport, Kalamazoo, Mich., July 25, 1978.
2. *Aircraft Incident Report*—E.S.M. Group, Inc., Cessna citation, N51MW; North Central Airlines, Inc., DC-9-30, N957N, LaGuardia Airport, Flushing, N.Y., June 21, 1978.
3. *Railroad Accident Report*—Head-end collision on Louisville and Nashville Railroad local freight train and yard train, Florence, Ala., September 18, 1978.
4. *Highway Accident Report*—Osterkamp Trucking, Inc., truck/full trailer and Dodge van collision, Scipio, Utah, August 26, 1977.
5. *Opinion and Order—Administrator* v. *Utley*, Dkt. SE-3864, disposition of respondent's appeal.

CONTACT PERSON FOR MORE INFORMATION:

Sharon Flemming, 202-472-6022.

[S-312-79 Filed 2-13-79; 3:26 pm]

[7715-01-M]

4

POSTAL RATE COMMISSION.

"FEDERAL REGISTER" CITATION OF PREVIOUS ANNOUNCEMENT: 44 FR 9461, February 13, 1979.

PREVIOUSLY ANNOUNCED TIME AND DATE OF THE CLOSED MEETING: 9 a.m., February 14, 1979.

CHANGES IN THE MEETING: Meeting date and time changed to February 15, 1979, 8:30 a.m. Meeting remains closed pursuant to 5 U.S.C. 552b (c)(2)(6).

CONTACT PERSON FOR MORE INFORMATION:

Ned Callan, Information Officer, Postal Rate Commission, room 500, 2000 L Street NW., Washington, D.C. 20268, 202-254-5614.

[S-313-79 Filed 2-13-79; 3:26 pm]

federal register

THURSDAY, FEBRUARY 15, 1979

PART II

# DEPARTMENT OF THE INTERIOR

## Fish and Wildlife Service

# MIGRATORY BIRD HUNTING

Proposed 1979–80 Regulations
(Preliminary)

[4310-55-M]

## DEPARTMENT OF THE INTERIOR

Fish and Wildlife Service

[50 CFR Part 20]

### MIGRATORY BIRD HUNTING

### Proposed 1979-80 Migratory Game Bird Hunting Regulations (Preliminary)

AGENCY: Fish and Wildlife Service, Interior.

ACTION: Proposed rulemaking.

SUMMARY: The Service proposes to establish hunting seasons, daily bag and possession limits, and shooting hours for designated groups or species of migratory game birds in the contiguous United States, Alaska, Hawaii, Puerto Rico and the Virgin Islands during 1979-80. The Service annually prescribes migratory bird hunting regulations. The effect of these hunting regulations is to continue providing hunting opportunity, a popular form of outdoor recreation, to the public and to aid Federal and State governments in the management of migratory game birds.

DATE: Comments must be received on or before May 16, 1979.

ADDRESS: Send comments to: Director (FWS/MBMO), U.S. Fish and Wildlife Service, Department of the Interior, Washington, D.C. 20240.

FOR FURTHER INFORMATION CONTACT:

John P. Rogers, Chief, Office of Migratory Bird Management, U.S. Fish and Wildlife Service, Department of the Interior, Washington, D.C. 20240 (202-254-3207).

SUPPLEMENTARY INFORMATION: The Fish and Wildlife Service proposes to establish hunting seasons, bag and possession limits, and shooting hours for migratory game birds under §§ 20.101 through 20.107 of Subpart K of 50 CFR 20.

"Migratory game birds" are those migratory birds so designated by conventions between the United States and several foreign nations for the protection and management of these birds. During the 1979-80 hunting season, regulations are proposed for certain designated members of the avian families Anatidae (wild ducks, geese, brant and swans); Columbidae (wild doves and pigeons); Gruidae (cranes); Rallidae (rails, coots, and gallinules); and Scolopacidae (woodcock and snipe).

#### NOTICE OF INTENTION TO ESTABLISH OPEN SEASONS

This notice announces the intention of the Director, U.S. Fish and Wildlife Service, to establish open hunting seasons, daily bag and possession limits, and shooting hours for all designated groups or species of migratory game birds for which hunting seasons are being considered for 1979-80 in the contiguous United States, Alaska, Hawaii, Puerto Rico and the Virgin Islands.

#### FACTORS AFFECTING REGULATIONS PROCESS

This is the first notice in a series of proposed and final rulemaking documents for migratory bird hunting regulations, and sets forth proposed season frameworks and shooting hours for the various groups of migratory game birds, as well as proposed daily bag and possession limits for certain groups or species for which these regulations ordinarily do not vary significantly from year to year.

The proposals set forth here for certain species, as well as the schedule by which more detailed proposals for these and other species will be developed, are dependent upon a number of factors. Among these are various annual population and habitat surveys, past harvest surveys, the times when these surveys are conducted and results are available for analysis, times of migration and other biological considerations, and times during which hunting may be allowed. The regulatory process for migratory game birds is strongly influenced by the times when the best and latest information is available for the development of regulations. For these reasons, the overall regulations process for hunting seasons and bag limits is divided into the following segments: (1) regulations for migratory game birds in Alaska, Puerto Rico, the Virgin Islands, and Hawaii; (2) seasons in the remainder of the United States opening prior to September 29 (early seasons); and (3) seasons opening in the remainder of the United States on September 29 or later (late seasons). Regulations development for each of the three categories will follow similar but independent schedules. Proposals relating to the harvest of migratory game birds that may be initiated after publication of this proposed rulemaking will be made available for public review in a supplemental proposed rulemaking to be published in the FEDERAL REGISTER.

Also, additional supplemental proposals will be published for public comment in the FEDERAL REGISTER as population, habitat, harvest, and other information becomes available.

Because of the late dates when certain of these data become available, it is anticipated that comment periods on proposals dealing with specific hunting seasons, limits and certain other regulations pertaining to migratory shore and upland game birds and waterfowl will necessarily be abbreviated. Special circumstances which limit the amount of time which the Service can allow for public comment are involved in the establishment of these regulations. Specifically, two considerations compress the time in which the rulemaking process must operate: the need, on one hand to establish final rules at a time early enough in the summer to allow affected State agencies to appropriately adjust their licensing and regulatory mechanisms, and, on the other hand, the lack before late July of specific, reliable data for this year's status of most waterfowl.

#### EXCEPTION FROM EXECUTIVE ORDER 12044 AND 43 CFR 14

Executive Order 12044, dated March 23, 1978, requires each agency to establish criteria for identifying which of its regulations are significant. On December 13, 1978, the Department published a revised 43 CFR 14 (43 FR 58292) to implement the order. The new procedures became effective on January 26, 1979.

Section 14.3(f) of these new procedures provides for granting exceptions to the need to determine significance and to undertake a regulatory analysis. This section reads:

> The Secretary or the Secretarial Officer having jurisdiction over the program to which a rule relates may exempt from the procedures for development of significant rules and the preparation of regulatory analyses rules (1) issued in response to an emergency or *which are governed by short-term statutory* or judicial deadlines, or (2) which relate to Federal Government procurement. (Emphasis added.)

The Service believes that the intricate procedures and schedules relating to the establishment of annual hunting regulations clearly fall within the exemption provision noted above. Consideration of the following information led to this assessment.

Every fall, the Federal Government proclaims annual hunting regulations under authority provided in the Migratory Bird Treaty Act (16 U.S.C. 704). These regulations are governed by the provisions of the Administrative Procedure Act, following consideration of the National Environmental Policy Act and the Endangered Species Act.

Section 704 of the Migratory Bird Treaty Act requires that the annual hunting regulations be based upon the most current biological data available. These include breeding population status and production, including habitat conditions. Since opportunities must be provided for public participation in each year's annual regulatory development cycle, the regulations development period extends from mid-January to mid-September, when the

last hunting regulations are finalized. The process falls into two distinct phases: (1) development of regulations frameworks within which State conservation agencies may select their specific season dates and other options, and (2) final rulemaking which includes these selections.

The first of these phases cannot be completed until the most current information on breeding population status and indicated production success has been obtained from field surveys undertaken by the Service, State, Canadian Wildlife Service, and Provincial cooperators. The data from these surveys must be assembled, tabulated, analyzed, and distributed to the public, including cooperators in the migratory bird management program.

Information for those migratory birds on which seasons ("early seasons") are proposed to open prior to September 29 becomes available about the third week in June. On the other hand, information on waterfowl and othe species for which seasons do not open until September 29 or thereafter ("late seasons") does not become available until late July or early August.

The North American migratory bird program is strongly cooperative in nature. It it based upon migratory bird treaties and conventions with Canada (1916), Mexico (1936), Japan (1972), and the Soviet Union (1978). Additionally, in the United States, State conservation departments play an essential role by conducting surveys, banding, protecting habitat, promulgating hunting regulations, printing and distributing regulatory information, and enforcing the regulations. Because of the size, complexity, and cooperative nature of the migratory bird hunting program, intricate meeting schedules and procedures have been developed to allow for consideration of all available information. This program has evolved over the past three decades.

Once the regulations have been finalized, they must be distributed to the public via summary leaflets, news releases, and radio and TV annoucements. It is extremely important that hunters have access to the annual regulations prior to the opening of the first hunting season. The foregoing procedure is explained in detail in this first FEDERAL REGISTER document which initiates each year's regulatory cycle. While the Service provides for the greatest practical opportunity for public input in the regulations development schedule, including several public comment periods, resulting supplemental proposed regulations, and public hearings, the factors mentioned abover require that the public comment periods be shortened as the cycle progresses. For example, extremely tight time requirements forced the Service to allow only 10 days for public comments on the proposed 1978-79 waterfowl hunting season frameworks published in the FEDERAL REGISTER on August 11, 1978 (43 FR 35890). The final late season regulations became effective upon their publication on September 21, 1978, only 9 days prior to the first season's opening. A similar schedule is anticipated this year.

In light of the above, the Assistant Secretary for Fish and Wildlife and Parks has concluded that the ever decreasing time frames in the regulatory process are mandated by the Migratory Bird Treaty Act and the Administrative Procedure Act. The regulatory process simply has no remaining slack in its timetable between the accumulation of critical summer survey data and the publication of the revised sets of proposed rulemakings. Compliance with the determination of significance and regulatory analysis criteria established under Executive Order 12044 would simply not be possible if the fall hunting season deadlines are to be achieved.

Consequently, the Assistant Secretary for Fish and Wildlife and Parks has approved the exemption of these regulations from the procedures of Executive Order 12044 and 43 CFR 14 which is provided for in section 6(b)6 and § 14.3(f), respectively.

### PUBLICATION OF REGULATORY DOCUMENTS

The process relating to the establishment of migratory bird hunting regulations in the United States involves a series of regulatory announcements published in the FEDERAL REGISTER in accordance with the Administrative Procedure Act. The publication of these documents is divided into three phases, as follows:

1. Proposed rulemakings—proposals to amend Subpart K (and, when necessary, other subparts) of 50 CFR Part 20, including supplementary proposed migratory game bird hunting regulations, and/or regulations frameworks which prescribe season lengths, bag and possession limits, shooting hours, and outside dates within which States may make season selections.

2. Final rulemakings—frameworks. Final migratory game bird regulations frameworks which prescribe season lengths, bag and possession limits, shooting hours, and outside dates within which States may make season selections.

3. Final rulemakings—season selections. Amendments to the various specific sections of subpart K (and, when necessary, other subparts) of 50 CFR Part 20 based on the final migratory game bird hunting regulations and the final regulations frameworks and on season selections made and communicated by the States to the Service.

Major steps in the 1979-80 regulatory cycle relating to public hearings and FEDERAL REGISTER notifications are illustrated in the accompanying diagram.

[4310-55-C]

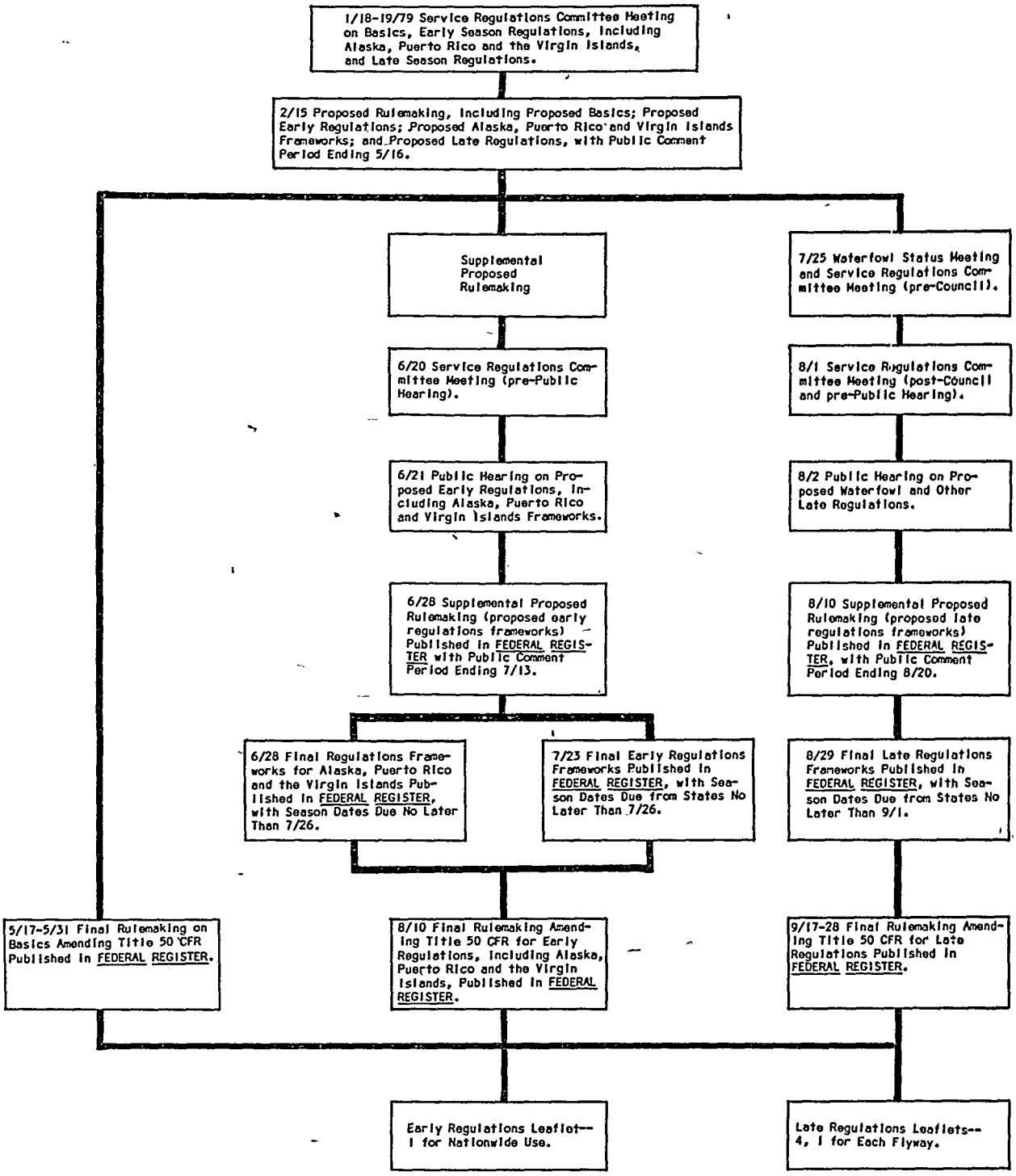


1979 SCHEDULE OF REGULATIONS MEETINGS

AND

PUBLICATIONS IN THE FEDERAL REGISTER

[4310-55-M]

All dates shown for frameworks and seasons in this and all following documents are inclusive.

Non-toxic shot regulatory proposals and final regulations are published separately under § 20.21 of Subpart C and § 20.108 of Subpart K.

OBJECTIVES OF THE MIGRATORY BIRD HUNTING REGULATIONS

The objectives of these annual regulations are as follows:

(1) To provide an opportunity to harvest a portion of certain migratory game bird populations by establishing legal hunting seasons.

(2) To limit harvest of migratory game birds to levels compatible with their ability to maintain their populations.

(3) To avoid the taking of endangered or threatened species so that their continued existence is not jeopardized, and their conservation is enhanced.

(4) To limit taking of other protected species where there is a reasonable possibility that hunting is likely to adversely affect their populations.

(5) To provide equitable hunting opportunity in various parts of the country within limits imposed by abundance, migration, and distribution patterns of migratory game birds.

(6) To assist, at times and in specific locations, in preventing depredations on agricultural crops by migratory game birds.

The management of migratory birds in North America is international in scope, and involves other nations, notably Canada and Mexico. Within the United States, other federal agencies, State conservation agencies, national and regional conservation groups, and the public provide much support to the achievement of these objectives.

DATA USED IN REGULATORY DECISIONS

The establishment of hunting regulations for migratory game birds in the United States during the 1979-80 season will take into consideration available population information, data from harvest surveys, and information on habitat conditions. Consideration will be given to accumulated data and trends. The main sources of data result from operational surveys conducted by the U.S. Fish and Wildlife Service in cooperation with the Canadian Wildlife Service, Direccion General de la Fauna Silvestre of Mexico, State and Provincial wildlife agencies, and others. The Service will consider technical information provided by consultants of the four waterfowl flyways. The information from these sources will be analyzed by the U.S. Fish and Wildlife Service with an opportunity for the public to review and provide comments on management rationales and proposed regulations, either in public hearings, by correspondence, or other communications.

Various surveys are used to ascertain the status, condition, and trends of migratory game bird populations. These include annual surveys of major waterfowl wintering habitats in the United States and in portions of Mexico each January; aerial surveys of major waterfowl production areas in the contiguous United States, Alaska, and Canada in May and early June for breeding population data, and again in July for production information; nationwide surveys in the United States and Canada of waterfowl hunters and the waterfowl harvest, including their geographical and temporal distributions, and species, age, and sex composition of the harvest; and band recovery information. Waterfowl breeding pair and production surveys also provide information on the abundance, persistence, and quality of water and other habitat conditions in major production areas. Information on waterfowl populations and habitat conditions outside the aerial survey area is furnished by cooperating State, Provincial and private agencies. Banding information provides insight into shooting pressures sustained by migratory game bird populations under different population levels and types of regulations. When viewed over many years, information on harvests and regulations can be useful for predicting approximate harvest levels which may result from various regulation changes.

Many of the surveys conducted primarily for ducks also provide information on geese. In addition, satellite imagery is used to monitor the rate at which snow and ice disappear from subarctic and arctic breeding grounds traditionally used by most species, and the greatest numbers of North American geese. Field observations in the fall and winter of geese also provide information on the production success on the past breeding season. Special population surveys are undertaken for many identifiable populations of geese throughout the year.

The annual call-count survey conducted nationwide in the United States in late May and early June provides information on the breeding population index of mourning doves. Information from past years and the current year is used to establish population trends. The woodcock singing-ground survey is conducted throughout the breeding range of the species in the eastern United States and Canada. Insight into production success the past year is provided by wing-collection surveys of woodcock hunters in the United States and Canada; data from these surveys indicate the age and sex composition of the harvest and its geographical and temporal distribution.

Accumulated and current data are examined for possible long-term trends in population size and productivity. Information on white-winged dove populations in Texas and the Southwest is provided by cooperating State agencies. Winter and spring surveys of sandhill cranes are conducted annually on major wintering areas and at the key staging area of the species along the Platte River in central Nebraska. The Service also solicits information on these and other species from knowledgeable individuals.

DEFINITIONS OF FLYWAYS

Flyways are biological-ecological units frequently used for reference in setting hunting regulations on many migratory game birds. These are defined as follows:

*Atlantic Flyway:* Connecticut, Delaware, Florida, Georgia, Maine, Maryland, Massachusetts, New Hampshire, New Jersey, New York, North Carolina, Pennsylvania, Rhode Island, South Carolina, Vermont, Virginia, and West Virginia.

*Mississippi Flyway:* Alabama, Arkansas, Illinois, Indiana, Iowa, Kentucky, Louisiana, Michigan, Minnesota, Mississippi, Missouri, Ohio, Tennessee, and Wisconsin.

*Central flyway:* Kansas, Nebraska, North Dakota, Oklahoma, South Dakota, and Texas; Colorado and Wyoming east of the Continental Divide; Montana east of Hill, Chouteau, Cascade, Meagher and Park Counties; and New Mexico east of the Continental Divide but outside the Jicarilla Apache Indian Reservation.

*Pacific Flyway:* Arizona, California, Idaho, Nevada, Oregon, Utah, and Washington; those portions of Colorado and Wyoming lying west of the Continental Divide; New Mexico west of the Continental Divide plus the Jicarilla Apache Indian Reservation; and in Montana, the counties of Hill, Chouteau, Cascade, Meagher, and Park, and all counties west thereof. Flights of most migratory game birds breeding or produced in Alaska are more strongly oriented to this flyway than the other flyways.

HEARINGS

Two public hearing pertaining to migratory bird hunting regulations being considered for the 1979-80 hunting seasons are scheduled. Both meetings will be conducted in accordance with 455 DM I of the Departmental Manual. On June 21 a public hearing for reviewing proposed hunting regulations for species for which early (opening prior to September 29) seasons are set will be held at 9 o'clock in

the Auditorium of the Department of the Interior Building, on C Street, between 18th and 19th Streets, NW., Washington, D.C. This hearing is scheduled primarily for the purpose of reviewing the status of mourning doves, woodcock, band-tailed pigeons, white-winged doves, rails, gallinules, and common snipe and discussing proposed hunting regulations for these species plus regulations for sandhill cranes in some States, migratory game birds in Alaska, Puerto Rico, and the Virgin Islands, mourning doves in Hawaii, September teal seasons, and special sea duck seasons in the Atlantic Flyway. On August 2 a public hearing for reviewing the status of other waterfowl and consideration of proposed regulations for those waterfowl and other migratory game birds for which regulations were not previously formulated will be held at 9 o'clock in the Auditorium of the General Services Administration Building, F Street, between 18th and 19th Streets, NW., Washington, D.C. These deliberations will pertain to seasons commencing September 29 or later. The public is invited to participate in both hearings.

Persons wishing to participate in these hearings should write the Director (FWS/MBMO), U.S. Fish and Wildlife Service, Department of the Interior, Washington, D.C. 20240, or telephone 202-254-3207. Those wishing to make statements should file copies of the statements with the Director before or during each hearing.

### Public Comments Solicited

Based on the results of current migratory game bird studies and having due consideration of all data and views submitted by interested parties, the amendments resulting from these proposals will specify open seasons, shooting hours, and bag and possession limits for doves, pigeons, rails, gallinules, woodcock, common snipe, coots, cranes, swans and other waterfowl; coots, cranes, common snipe and waterfowl in Alaska; sea ducks in coastal waters of certain eastern States; migratory game birds in Puerto Rico and the Virgin Islands; and mourning doves in Hawaii.

The policy of the Department of the Interior is, whenever practicable, to afford the public an opportunity to participate in the rulemaking process. Accordingly, interested persons may submit written comments, suggestions, or objections regarding the proposed amendments.

The Director intends that finally adopted rules be as responsive as possible to all concerned interests. He therefore desires to obtain the comments and suggestions of the public, other concerned governmental agencies, and private interests on these proposals.

Final promulgation of migratory bird hunting regulations for the continental United States, Puerto Rico, the Virgin Islands, and Hawaii for the 1979-80 season will take into consideration all comments received by the Director. Such comments, and any additional information received, may lead the Director to adopt final regulations differing from these proposals. Interested persons are invited to participate in this rulemaking by submitting written comments as follows:

For comments on *I. "Proposed 1979-80 Migratory Game Bird Hunting Regulations (preliminary)"* write to the Director (FWS/MBMO), U.S. Fish and Wildlife Service, Department of the Interior, Washington, D.C. 20240.

For comments on *II. "Proposed Basic Regulations* (concerning taking by paraplegics and single and double amputees) write to the Director (FWS/LE), at the above address.

Comments received will be available for public inspection during normal business hours at the Service's office in Room 525-B, Matomic Building, 1717 H Street, NW., Washington, D.C.

All relevant comments received no later than May 16, 1979, will be considered. The Service will attempt to acknowledge received comments, but substantive response to individual comments may not be provided.

### NEPA Consideration

The "Final Environmental Statement for the Issuance of Annual Regulations Permitting the Sport Hunting of Migratory Birds (FES 75-54)" was filed with the Council on Environmental Quality on June 6, 1975, and notice of availability was published in the Federal Register on June 13, 1975 (40 FR 25241). In addition, several environmental assessments have been prepared on specific matters which serve to supplement the material in the Final Environmental Statement.

### Endangered Species Act Consideration

Prior to finalization of the 1979-80 migratory game bird hunting regulations, consideration will be given to provisions of the Endangered Species Act of 1973, and as amended, (16 U.S.C. 1531-1543; hereinafter the act) to insure that hunting does not jeopardize the continued existence of any species designated as endangered or threatened or modify or destroy its critical habitat and is consistent with the conservation programs for those species. Consultations under section 7 of this act may cause changes to be made to proposals in this and future supplemental proposed rulemaking documents.

### Authorship

The primary author of this proposed rule is Henry M. Reeves, Office of Migratory Bird Management, working under the direction of John P. Rogers, Chief.

It is therefore proposed to amend 50 CFR Part 20 as follows.

## I. Proposed 1979-80 Migratory Game Bird Hunting Regulations (Preliminary)

The following general frameworks and guidelines for hunting certain waterfowl, swans, cranes, mourning doves, white-winged doves, Zenaida doves, scaly-naped pigeons, band-tailed pigeons, gallinules, rails, coots, common snipe and woodcock are proposed during the 1979-80 season. Changes or possible changes, when noted, are in comparison to 1978-79 final frameworks or regulations. In this respect, date changes of one or two days, because of the 1979-80 calendars causing dates to fall on different days of the week, are regarded as "no change." All mentioned dates are inclusive.

1. *Shooting hours.* (No change.) Basic shooting hours beginning one-half hour before sunrise and ending at sunset are proposed with the option that more restrictive shooting hours within this framework may be selected by the States or may be established for special seasons.

Shooting hours were subject to extensive review and discussion during the regulatory process for the 1977-78 hunting seasons. The Service undertook an exhaustive study of information and data in its files and prepared an environmental assessment on shooting hours which was made available to the public in August 1977. The Director concluded, after study of this assessment, that the proposed shooting hours did not constitute a major impact upon the environment, and signed a negative declaration to that effect. Copies of the assessment are still available and can be supplied upon request to the Office of Migratory Bird Management, U.S. Fish and Wildlife Service, Department of the Interior, Washington, D.C. 20240.

The Service adopts and incorporates by reference for purposes of this rulemaking the rationale for the proposed shooting hours set forth in the two past years' proposed and final regulations for migratory bird hunting. However, because of the interest in the shooting hours issue, the Service is continuing to gather and analyze additional data.

2. *Framework dates for ducks and geese in the continental United States.* (No change.) To be generally the same as during the 1978-79 season. From October 1, 1979, to January 20, 1980, for the Atlantic and Mississippi

Flyways, and from September 29, 1979, through January 20, 1980, for the Central and Pacific Flyways, with the following exceptions:

(a) Sea ducks: in designated sea duck hunting areas in the Atlantic Flyway—September 15, 1979, through January 20, 1980.

(b) September teal season framework: September 1 through September 30, 1979, in specified areas to be identified in consultation with the States.

(c) Special scaup season framework: October 1, 1979, through January 31, 1980, in specified areas to be identified in consultation with the States.

(d) Pacific Flyway brant season framework: Deferred pending additional information.

(e) Alaska waterfowl: September 1, 1979, through January 26, 1980.

3. *Black ducks.* (No change.) An environmental assessment on proposed hunting regulations on black ducks was issued by the Service in August 1976. Subsequently, a three-year cooperative research and management program was developed between the Service and States of the Atlantic and Mississippi Flyways. This was reported in the FEDERAL REGISTER dated March 10, 1977; 42 FR 13315, and for informational purposes is repeated as follows:

A research and management program for this species is presently being developed by the Service in cooperation with States in the Atlantic and Mississippi Flyways. The first phase of this program calls for a three-year intensified winter banding program in these Flyways. The winter banding program is under way now. During this period, restrictive black duck bag limits similar to those in effect in 1976 are to be retained. The winter banding program will be supplemented by pre-season banding of black ducks. In line with this effort, the Atlantic Flyway Council's Eastern Canada Cooperative Banding Program was renewed in 1976 for a 5-year period. Information from these banding programs, and from other sources, will be used to establish values for certain black duck population parameters. Future management programs will be evaluated by measuring the effect of such programs on black duck population parameters developed from the 1977–79 banding programs.

This winter marks the third of a three-year banding program. The Service proposes no changes in black duck hunting regulations in 1979–80 so that a reliable baseline of information can be established by which to measure the effects of regulatory changes which may be made in the future.

4. *Wood ducks.* (No change.) In 1977 regulations for this species were changed to permit southeastern States the option of an early October hunting season during which no special bag and possession limits applied under conventional regulations; under point system regulations, the species was placed in the mid-point category. The criteria for such seasons were described in the FEDERAL REGISTER dated May 25, 1977 (42 FR 26669), and are summarized for informational purposes:

The southeastern United States is defined as Virginia, Kentucky, Tennessee, Arkansas, and Louisiana and all States east thereof in the Atlantic and Mississippi Flyways. The Service proposes to again consider regulations aimed at additional wood duck harvest in the southeastern States only within the following guidelines:

(a) In 1979 States in the southeastern United States may split their regular duck hunting season in such a way that a hunting season not to exceed 9 consecutive days occurs between October 1 and October 15.

(b) During this period under conventional regulations, no special restrictions within the regular daily bag and possession limits established for the Flyway in 1979 shall apply to wood ducks, and under the point system, the point value for wood ducks shall be reduced from the high to the mid-point category. For other species of ducks daily bag and possession limits shall be the same as established for the Flyway under conventional or point system regulations.

(c) In addition, the extra blue-winged teal option available to States in the Atlantic and Mississippi Flyways that select conventional regulations and do not have a September teal season may be applied during the period.

(d) This exception to the daily bag and possession limits for wood ducks shall not apply to that portion of the duck hunting season that occurs after October 15.

(e) This special provision for wood ducks shall be regarded as experimental, and subject to annual and final evaluations by participating States of population, harvest, banding, and other available information.

(f) The experiment shall be conducted for a specified time period to be agreed upon between the Service and participating States.

The Service proposes to retain this option for the 1979 season.

5. *Sea ducks.* (No change.) A maximum open season of 107 days for taking scoter, eider, and oldsquaw ducks is prescribed during the period between September 15, 1979, and January 20, 1980, in all coastal waters and all waters of rivers and streams seaward from the first upstream bridge in Maine, New Hampshire, Massachusetts, Rhode Island, and Connecticut; in those coastal waters of New York lying in Long Island and Block Island Sounds and associated bays eastward from a line running between Miamogue Point in the town of Riverhead to Red Cedar Point in the town of Southampton, including any ocean waters of New York lying south of Long Island; in any waters of the Atlantic Ocean and in any tidal waters of any bay which are separated by at least 1 mile of open water from any shore, island, and emergent vegetation in New Jersey, South Carolina, and Georgia; and in any waters of the Atlantic Ocean and in any tidal waters of any bay which are separated by at least 800 yards of open waters from any shore, island, and emergent vegetation in Delaware, Maryland, North Carolina, and Virginia. Such areas shall be described, delineated, and designated as special sea duck hunting areas under the hunting regulations adopted by the respective States. In all other areas of these States and in all other States in the Atlantic Flyway, sea ducks may be taken only during the regular open season for ducks.

The daily bag limit is 7 and the possession limit is 14, singly or in the aggregate of these species. During the regular duck season in the Atlantic Flyway, States may set, in addition to the regular limits, a daily bag limit of 7 and a possession limit of 14 scoter, eider, and oldsquaw ducks, singly or in the aggregate of these species.

Shooting hours are ½ hour before sunrise until sunset daily.

Any State desiring its sea duck season to open in September must make its selection no later than July 26, 1979. Those States desiring their sea duck season to open after September may make their selection at the time they select their waterfowl seasons.

6. *September teal season.* (No change.) An open season on all species of teal may be selected by Alabama, Arkansas, Colorado (Central Flyway portion), Illinois, Indiana, Kansas, Kentucky, Louisiana, Mississippi, Missouri, New Mexico (Central Flyway portion), Ohio, Oklahoma, Tennessee and Texas in areas delineated by State regulations.

Shooting hours are from sunrise to sunset daily. The season may not exceed 9 consective days with a bag limit of 4 teal daily and 8 in possession. States must advise the Service of season dates and special provisions to protect non-target species by July 26, 1979.

7. *Extra blue-winged teal option.* (No change.) States in the Atlantic, Mississippi, and Central Flyways selecting neither a September teal season nor the point system may select an extra daily bag of 2 and possession limit of 4 blue-winged teal for 9 consecutive days designated during the regular duck season. These extra limits are in addition to the regular duck bag and possession limits.

8. *Special scaup season.* (No change.) States in the Atlantic, Mississippi, and Central Flyways may select a special scaup-only hunting season not to exceed 16 consecutive days, with a daily bag limit of 5 and possession limit of 10 scaup. Shooting hours between one half hour before sunrise to sunset may be selected. This special season is subject to the following conditions:

1. The season must fall between October 1, 1979, and January 31, 1980.

2. The season must fall outside the open season for any other ducks except sea ducks.

3. The season must be limited to areas mutually agreed upon between the State and the Service prior to September 1, 1979, and

4. These areas must be described and delineated in State hunting regulations.

5. In lieu of a special scaup only season, Vermont may, for the Lake Champlain Area, select a special scaup and goldeneye season not to exceed 16 consecutive days, with a daily bag limit of 3 scaup or 3 goldeneyes or 3 in the aggregate, and a possession limit of 6 scaup or 6 goldeneyes or 6 in the aggregate, subject to the same provisions that apply to special scaup seasons elsewhere.

9. *Extra scaup option.* (No change.) As an alternative to a special scaup season, States in the Atlantic, Mississippi, and Central Flyways, except those selecting the point system, may select an extra daily bag of 2 and possession limit of 4 scaup during the regular duck hunting season, subject to conditions 3 and 4 listed for special scaup seasons. These extra limits are in addition to the regular duck limits and apply during the entire regular duck season.

10. *Mergansers.* (No change.) States in the Atlantic, Mississippi, and Pacific Flyways may select separate bag limits for mergansers in addition to the regular duck bag limits during the regular duck season. The bag limit is 5 daily and 10 in possession. Elsewhere, mergansers are included within the regular daily bag and possession limits for ducks. The nationwide restriction on hooded mergansers of 1 daily and 2 in possession is continued.

11. *Canvasback and redhead ducks.* (No change.) No changes in hunting regulations for these two species are proposed at this time. The management rationales for canvasbacks and redheads were described in an environmental assessment issued in August 1976. Possible changes in hunting regulations are contingent upon results of the current year's waterfowl surveys. Virginia resubmitted a recommendation made last year by the Atlantic Flyway Council for canvasbacks and redheads. The proposal includes the provision for a subseason on male canvasbacks and male redheads in portions of Virginia, Maryland, New York, and North Carolina where male canvasbacks normally winter. The subseason would be from 8 to 15 days in length. In States selecting the point system, males of these species would be assigned 25 points; in States selecting conventional regulations, four male birds singly or in the aggregate of these species would be allowed. The Service has taken no action on the proposal pending receipt of a more complete proposal from the Atlantic Flyway Council, consideration of additional information not yet available, and other review and recommendations.

12. *Zoning.* (No change.) The Service again proposes to offer States of the Atlantic and Mississippi Flyways the option to divide their States into two zones for establishing differential hunting seasons. The criteria for zoning were described in the FEDERAL REGISTER dated May 25, 1977; 42 FR 26671, and for informational purposes are repeated as follows:

The Service will consider the establishment of the proposed zones based on an evaluation of each of the State proposals according to the following criteria:

1. The establishment of any of these zones shall be considered experimental until the effects of the zoning are more clearly defined and understood.

2. The primary purpose of the zoning shall be to provide more equitable distribution of harvest opportunity for hunters throughout a State.

3. Proposed zones and season dates shall not substantially change the pattern of harvest distribution among the States within a flyway.

4. Zoning shall not detrimentally change the harvest distribution pattern among species or populations at either the State or flyway level.

5. Each zoning proposal shall include a detailed evaluation plan describing how changes in harvest will be measured, and what steps will be taken to compensate for any significant changes that might occur.

6. Each zoning proposal shall include an evaluation of anticipated changes due to zoning. If on the basis of this evaluation the Service and the State agree that no significant increase in harvest is likely, the zoning experiment may be conducted without a reduction in season length for each zone, pending further evaluation. If the evaluation indicates that a significant increase in harvest is likely, an appropriate reduction in season length compared to what would be permitted without zoning shall be made for each zone.

7. Where two or more adjoining States in a flyway may be involved simultaneously in zoning experiments, consideration shall be given to the possibility of consolidating zones.

Memoranda of Agreement have been signed between the Service and each State participating in the experimental zoning. The Service will consider zoning proposals by other States in the Mississippi and Atlantic Flyways according to the above criteria.

13. *Goose and brant seasons.* (No change.) The Canadian Wildlife Service, State conservation agencies, and the four waterfowl flyway councils traditionally provide population and harvest information useful in setting annual regulations for geese and brant. The midwinter survey, the past season's waterfowl harvest surveys, and satellite imagery for May and June of 1979 will provide additional information later. Consequently, the following proposed general regulations are subject to revision as additional information becomes available.

*Atlantic Flyway.* Seasons and bag limits are to be generally the same as last year pending receipt of additional information and recommendations from the Flyway Council. The following regulations are tentatively proposed:

Between October 1, 1979, and January 20, 1980, Maine, New Hampshire, Vermont, Massachusetts, Connecticut, Rhode Island, New York, Pennsylvania, West Virginia, New Jersey, Maryland, and Virginia (excluding those portions of the cities of Virginia Beach and Chesapeake lying east of Interstate 64 and U.S. Highway 17) may select 70-day seasons on Canada geese; the daily bag and possession limits will be 3 and 6 geese, respectively. However, in the area comprised of Delaware, the Delmarva Peninsula portions of Maryland and Virginia, and that portion of Pennsylvania lying east and south of a boundary beginning at Interstate Highway 83 at the Maryland border and extending north to Harrisburg, then east on U.S. Highway 22 to the New Jersey border, and that portion of New Jersey south of the Atlantic City Expressway from its juncture with Interstate 76 near Camden southeast to Atlantic city, the Canada goose season length will be 90 days with the closing framework date extended to January 31, 1980. The daily bag limit within this area will be 4 birds with a possession limit of 8 birds. North Carolina and those portions of the cities of Virginia Beach and Chesapeake lying east of Interstate 64 and U.S. Highway 17 in Virginia may select 50-day seasons on Canada geese within the October 1, 1979, to January 20, 1980, framework; the daily bag and possession limits will be 2 and 4 Canada geese, respectively. South Carolina may select a 50-day season on Canada geese within the October 1, 1979, to January 20, 1980, framework. The daily bag and possession limits will be 1 and 2 Canada geese, respectively. The season will be closed on Canada geese in Florida and Georgia.

Between October 1, 1979, and January 20, 1980, States in the Atlantic Flyway may select 70-day seasons on snow geese (including blue geese); the daily bag and possession limits will be 2 and 4 geese, respectively.

Because of a reduced population no open season on Atlantic brant is proposed. A closed season will continue until the population has recovered from losses sustained during the winters of 1976-77 and 1977-78 to starvation and freezing, and poor production during 1978. Reopening the Atlantic brant hunting season in the future will be determined based on three data

sources: (1) Population inventories in February or March after ice disappearance along the Atlantic coast, and in the fall on migration and wintering areas; (2) an evaluation of conditions on the breeding grounds as determined by satellite imagery; and (3) an evaluation of breeding ground production.

Environmental assessments made available to the public in 1975 articulate the management rationale being followed for Atlantic brant and greater snow geese.

*Mississippi Flyway.* Seasons and bag limits for Canada geese to be generally the same as last year. That is, not to exceed 70 days and bag limits not to exceed 2 daily and 4 in possession pending additional information and recommendations. Seasons and bag limits for specific populations of Canada geese and for snow geese (including blue geese) and white-fronted geese are to be determined later when more information is available.

Harvests of the Eastern Prairie and Mississippi Valley Canada goose populations in this flyway are controlled by quota allocations. Specific quotas will be established after population management objectives, recent population information, probable production, and expected fall flights have been taken into consideration. It is intended that the entire quota can be safely taken without detriment to the population and that such harvests are justifiable under the appropriate population objectives. Goose seasons in quota areas end when the quota has been achieved and the season terminated by emergency order under provision of § 20.26 of this Title 50 or when the permissible number of hunting days has expired.

*Central Flyway.* Seasons and bag limits for Canada, white-fronted, Ross', and snow geese (including blue geese) are deferred pending additional information and recommendations. No significant changes from those in effect in 1978-79 are anticipated.

*Pacific Flyway.* (Possible change.) Seasons and bag limits to be generally the same as last year. That is, not to exceed 93 days with overall goose bag limits not to exceed 6 daily and in possession. Specific season frameworks, season lengths, and daily bag limits for geese are deferred pending additional information and recommendations.

Possible regulatory changes in the Pacific Flyway include modifications of areas and times of hunting of Canada geese in order to provide necessary protection to the endangered Aleutian Canada goose. No action will be taken pending assembly and study of population and other data, and completion of consultations under section 7 of the Endangered Species Act. Concern has been expressed about the status of white-fronted geese in the Pacific Flyway, and this situation is under study. The United States and the U.S.S.R. are cooperating in a program to increase the population of lesser snow geese which breed on Wrangel Island, U.S.S.R., and which winter in the Skagit River Delta of Washington and the Central Valley of California. Special restrictions have been placed on the harvest of the geese in the Pacific Flyway. The Service will review this matter, in consultation with the involved States, in the course of developing specific regulatory proposals for 1979.

14. *Whistling swans.* (No change.) In Utah, Nevada, and Montana, an open season for taking a limited number of whistling swans may be selected subject to the following conditions: (a) the season must run concurrently with the duck season; (b) in Utah, no more than 2,500 permits may be issued, authorizing each permittee to take 1 whistling swan; (c) in Nevada, no more than 500 permits may be issued, authorizing each permittee to take 1 whistling swan in Churchill County; (d) in Montana, no more than 500 permits may be issued, authorizing each permittee to take 1 whistling swan in Teton County; (e) permit forms, and correspondingly numbered metal locking seals furnished by the Service, must be issued by the appropriate State conservation agency on an equitable basis without charge.

15. *Sandhill cranes.* (No change.) Pending evaluation of harvest data from the 1978 season, to be available later, seasons for hunting sandhill cranes may be selected within specified areas in Colorado, New Mexico, Texas, Oklahoma, North Dakota, South Dakota, Montana, and Wyoming with no substantial change in dates from the 1978-79 seasons and with a daily bag limit of 3 and a possession limit of 6 sandhill cranes. Shooting hours between one-half hour before sunrise and sunset may be selected. The provision for the Federal sandhill crane hunting permit is continued.

16. *Coot bag limit.* (No change.) Within the regular duck season, States in the Atlantic, Mississippi and Central Flyways may permit a daily bag limit of 15 and a possession limit of 30 coots, and States in the Pacific Flyway may permit 25 coots daily and in possession, singly or in the aggregate with gallinules.

17. *Gallinules.* (No change.) States in the Atlantic, Mississippi and Central Flyways may select hunting seasons between September 1, 1979, and January 20, 1980, of not more than 70 days. States in the Pacific Flyway must select their hunting seasons within the waterfowl seasons. States may split their seasons without penalty. Shooting hours between one-half hour before sunrise and sunset may be selected. The daily bag and possession limits may not exceed 15 and 30, respectively, except in the Pacific Flyway where the daily bag and possession limits may not exceed 25 coots and gallinules, singly or in the aggregate of the two species.

States may select their gallinule seasons at the time they select their waterfowl seasons. If their selection is deferred, daily bag and possession limits will remain the same, but shooting hours may not exceed those for waterfowl, and the season length may not exceed that for waterfowl, or 70 days, whichever is the shorter period. Exception: A gallinule season selected by any State in the Pacific Flyway may not exceed its waterfowl season, and the daily bag and possession limits may not exceed 25 coots and gallinules, singly or in the aggregate of the two species.

18. *Rails.* (No change.) The States included herein may select seasons between September 1, 1979, and January 20, 1980, on clapper, king, sora, and Virginia rails as follows:

The season lengths for all species of rails may not exceed 70 days.

Shooting hours between ½ hour before sunrise and sunset in all States for all species may be selected.

*Clapper and king rails.* 1. In Rhode Island, Connecticut, New Jersey, Delaware, and Maryland, the daily bag and possession limits may not exceed 10 and 20 clapper and king rails, respectively, singly or in the aggregate of these two species.

2. In Texas, Louisiana, Mississippi, Alabama, Georgia, Florida, South Carolina, North Carolina, and Virginia, the daily bag and possession limits may not exceed 15 and 30 clapper and king rails, respectively, singly or in the aggregate of the two species.

3. The season will remain closed on clapper and king rails in all other States.

*Sora and Virginia rails.* In addition to the prescribed limits for king and clapper rails, daily bag and possession limits not exceeding 25, singly or in the aggregate of sora and Virginia rails, may be selected in States in the Atlantic, Mississippi, and Central Flyways, and portions of Colorado, Montana, New Mexico, and Wyoming in the Pacific Flyway. No hunting season is proposed for rails in the remainder of the Pacific Flyway.

19. *Common snipe.* (No change.) States in the Atlantic, Mississippi, and Central Flyways may select hunting seasons between September 1, 1979, and February 28, 1980, not to exceed 107 days, except that in Maine, New Hampshire, Massachusetts, Rhode Island, Connecticut, New York, New

Jersey, Delaware, Maryland, and Virginia the season must end no later than January 31. Seasons between September 1, 1979, and February 28, 1980, and not to exceed 93 days may be selected in the Pacific Flyway portions of Montana, Wyoming, Colorado, and New Mexico.

All States in the Pacific Flyway, except those portions of Colorado, Montana, New Mexico, and Wyoming in the Pacific Flyway, must select their snipe seasons to run concurrently with their regular duck seasons. In these Pacific Flyway States, except portions of the four States noted previously, it will be unlawful to take snipe when it is unlawful to take ducks.

Shooting hours between ½ hour before sunrise and sunset may be selected. Daily bag and possession limits may not exceed 8 and 16, respectively. Any State may split its snipe season without penalty.

States or portions thereof in the three eastern flyways may defer selections of snipe seasons until the time they choose their waterfowl seasons in August. In that event, the daily bag and possession limits will remain the same but shooting hours must conform with those for waterfowl.

20. *Woodcock.* (No change.) States in the Atlantic, Mississippi, and Central Flyways may select hunting seasons between September 1, 1979, and February 28, 1980, of not more than 65 days, with daily bag and possession limits of 5 and 10, respectively. In Maine, New Hampshire, Massachusetts, Rhode Island, Connecticut, New York, New Jersey, Delaware, Maryland, and Virginia the season must end by January 31. Shooting hours may be selected between ½ hour before sunrise and sunset. Any State may split its woodcock season without penalty. New Jersey may select experimental woodcock hunting seasons by north and south zones divided by State Highway 70. Seasons in each zone may not exceed 55 days.

21. *Band-tailed pigeons.* (Possible change.)

*West Coast States:* The Service will consider, in consultation with Washington, Oregon, and California, the desirability of regulatory changes relating to season frameworks, season lengths, daily bag and possession limits, and/or local areas where hunting may be further restricted as a means of providing additional protection to the population or population segments that may be declining in numbers. Such restrictions may be applied independently or in combination. Final decisions on this matter are deferred, pending additional information evaluation and recommendations.

*Four-Corners States:* Arizona, Colorado, New Mexico, and Utah.

These States may select hunting seasons not to exceed 30 consecutive days, between September 1 and November 30, 1979. Shooting hours between ½ hour before sunrise and sunset may be selected. The daily bag and possession limits may not exceed 5 and 10, respectively. Each hunter must have been issued and carry on his person while hunting band-tailed pigeons a valid band-tailed pigeon hunting permit issued by the respective State wildlife agency, and such permit will be valid in that State only. The season shall be open only in the areas delineated by the respective States in their hunting regulations.

New Mexico may divide its State into two zones, along a line following U.S. Highway 60 from the Arizona State line east to Interstate Highway 25 at Socorro and along Interstate Highway 25 from Socorro to the Texas State line. Between September 1, 1979, and November 30, 1979, in the North Zone, and October 1, 1979, and November 30, 1979, in the South Zone, hunting seasons not to exceed 20 consecutive days in each zone may be selected by New Mexico.

22. *Mourning doves.* (No change.) Concern has been expressed by some organizations and individuals about the hunting of mourning doves in September. Accordingly, the Service reviewed and analyzed available information and data on the subject and issued an environmental assessment in July 1977. It was concluded that hunting in September was not detrimental to overall mourning dove populations and that by not permitting September hunting, the opportunities for dove hunting would be curtailed in many areas. A cooperative Federal-State research program to obtain further information on this matter is presently underway. The results of this investigation will be used in future evaluations of September hunting of mourning doves.

The Service proposes the following regulations for this year.

Between September 1, 1979, and January 15, 1980, except as noted, States may select hunting seasons and bag limits as follows:

*Eastern Management Unit:* All States east of the Mississippi River, and Louisiana.

1. Shooting hours between 12 o'clock noon and sunset daily;

2. Daily bag and possession limits not to exceed 12 and 24, respectively, in all States;

3. Hunting seasons of not more than 70 half-days which may run consecutively or be split into not more than three periods.

4. As an option to the above, Alabama, Georgia, Louisiana, and Mississippi may elect to zone their States as follows:

A. Two zones per State having the following descriptions or division lines:

*Alabama.*—The South Zone is defined as that area lying south of U.S. Highway 84 running east to the Covington County line, and including Coffee, Covington, Dale, Geneva, Henry, and Houston Counties. The North Zone consists of the remainder of Alabama.

*Georgia.*—The North Zone is defined as that area lying north of U.S. Highway 280 east to Abbeville, thence along Ocmulgee and Altamaha Rivers to the Atlantic Ocean. The South Zone consists of the remainder of Georgia.

*Louisiana.*—The North Zone is defined as that area lying north of Interstate Highway 10 from the Texas State line to Baton Rouge, Interstate Highway 12 from Baton Rouge to Slidell, and Interstate Highway 10 from Slidell to the Mississippi State Line. the South Zone consists of the remainder of Louisiana.

*Mississippi.*—The North Zone is defined as that area lying north of U.S. Highway 84. The South Zone consists of the remainder of Mississippi.

B. Within each zone, these States may select hunting seasons of not more than 70 half-days which may run consecutively or be split into not more than three periods.

C. The hunting seasons in the south zones of these States may commence no earlier than September 20, 1979.

*Central Management Unit:* Arkansas, Colorado, Iowa, Kansas, Minnesota, Missouri, Montana, Nebraska, New Mexico, North Dakota, Oklahoma, South Dakota, Texas, and Wyoming.

1. Shooting hours between ½ hour before sunrise and sunset daily in all States.

2. Daily bag and possession limits not to exceed 10 and 20, respectively, in all States;

3. Hunting seasons in all States of not more than 60 full days which may run consecutively or be split into not more than three periods.

4. Texas may select hunting seasons for each of two previously established zones subject to the following conditions:

A. The hunting season may be split into not more than two periods.

B. The North Zone may have a season of not more than 60 days between September 1, 1979, and January 22, 1980.

C. The South Zone may have a season of not more than 60 days between September 20, 1979, and January 22, 1980. In that portion of Texas where white-winged dove hunting is allowed, the mourning dove season may be held concurrently with the white-winged dove season and with shooting hours coinciding with those for white-winged doves. However, the

remainder of the season (60 days less the number of days of the white-winged dove season) must be within the September 20, 1979-January 22, 1980, period.

5. In New Mexico, daily bag and possession limits of mourning and white-winged doves may not exceed 10 and 20, singly or in the aggregate of the two species.

*Western Management Unit:* Arizona, California, Idaho, Nevada, Oregon, Utah, and Washington.

1. Shooting hours between ½ hour before sunrise and sunset daily;

2. Daily bag and possession limits not to exceed 10 and 20, respectively;

3. Hunting seasons of not more than 50 full days which may run consecutively or be split into not more than three periods.

In the Nevada counties of Clark and Nye, and in the California counties of Imperial, Riverside, and San Bernardino, daily bag and possession limits of mourning and white-winged doves may not exceed 10 and 20, respectively, singly or in the aggregate of the two species.

23. *White-winged doves.* (No change.) Arizona, California, Nevada, New Mexico, and Texas may select hunting seasons between September 1, 1979, and December 31, 1979, and daily bag limits as stipulated below. Shooting hours between ½ hour before sunrise and sunset may be selected.

Arizona may select a hunting season for the entire State of not more than 25 consecutive days, to run concurrently with the first period of the split mourning dove season. the daily bag and possession limits may not exceed 10 white-winged doves.

California may select a hunting season for the counties of Imperial, Riverside, and San Bernardino only. The daily bag and possession limits may not exceed 10 and 20 white-winged and mourning doves, respectively, singly or in the aggregate of the two species. Dates, limits, and hours are to conform with those for mourning doves.

Nevada may select a hunting season for the counties of Clark, and Nye only. The daily bag and possession limits may not exceed 10 and 20 white-winged and mourning doves, respectively, singly or in the aggregate of the two species. Dates, limits and hours are to conform with those for mourning doves.

New Mexico may select a hunting season with daily bag and possession limits not to exceed 10 and 20 white-winged and mourning doves, respectively, singly or in the aggregate of the two species. Dates, limits, and hours are to conform with those for mourning doves.

Texas may select a hunting season, the length of which will be determined when information from State surveys is available, for that portion of the State where the species occurs. The daily bag and possession limts may not exceed 10 and 20 white-winged doves, respectively. The season may be split within the overall time frame.

24. *Migratory game bird seasons in Alaska.* (No change.) In 1977, by mutual agreement, the Service and the Alaska Department of Fish and Game initiated a study of stabilized hunting regulations for the 5-year period, 1977 through 1981. Background information on this experiment was given in the FEDERAL REGISTER dated March 10, 1977; 42 FR 13317. Regulations proposed to be in effect during the 1979-80 season are as follows:

PROPOSED FRAMEWORKS FOR SELECTING OPEN SEASON DATES FOR HUNTING MIGRATORY BIRDS IN ALASKA, 1979-80

Between September 1, 1979, and January 26, 1980, Alaska may select seasons on waterfowl, snipe, and cranes, subject to the following limitations:

1. *Shooting hours:* One-half hour before sunrise to sunset daily.

2. *Season lengths:* A. In the Pribilof and Aleutian Islands, except Unimak Island, an open season of 107 consecutive days for ducks, geese, and brant. In the Kodiak (State game management unit 8) area, an open season of 107 days for ducks, geese, and brants, and the season may be split without penalty.

B. Exception: the season is closed on Canada geese from Unimak Pass westward in the Aleutian Island chain.

C. In the remainder of Alaska, including Unimak Island, an open season of 107 consecutive days for ducks, geese, and brant.

D. An open season for snipe concurrent with the duck season.

E. An open season for sandhill cranes concurrent with the duck season.

3. *Bag and possession limits:* A. *Ducks*—Except as noted, a basic daily bag limit of 7 and a possession limit of 21 ducks. Daily bag and possession limits in the North Zone are 10 and 30, and in the Gulf Coast Zone they are 8 and 24, respectively. In addition to the basic limit, there is a daily bag limit of 15 and a possession limit of 30 scoter, eider, oldsquaw, harlequin, and American and red-breasted mergansers, singly or in the aggregate of these species.

B *Geese*—A basic daily bag limit of 6 and a possession limit of 12, of which not more than 4 daily and 8 in possession may be white-fronted or Canada geese, singly or in the aggregate of these species. In addition to the basic limit, there is a daily bag limit of 6 and a possession limit of 12 Emperor geese.

C. *Brant*—A daily bag limit of 4 and a possession limit of 8.

D. *Common Snipe*—A daily bag limit of 8 and a possession limit of 16.

E. *Sandhill cranes*—A daily bag limit of 2 and a possession limit of 4.

25. *Migratory game birds in Puerto Rico and doves and pigeons in the Virgin Island.* (No change.)

PROPOSED FRAMEWORKS FOR SELECTING OPEN SEASON DATES FOR HUNTING MIGRATORY BIRDS IN PUERTO RICO, 1979-80.

*Doves and pigeons.* An open season of 60 days between September 1, 1979, and January 15, 1980, may be selected for hunting Zenaida, mourning and white-winged doves, and scaly-naped pigeons in Puerto Rico.

Shooting hours may extend from one-half hour before sunrise until sunset daily.

The daily bag and possession limit for doves of the species named herein is 10 singly or in the aggregate.

The daily bag and possession limit for scaly-naped pigeons is 5.

No open season is prescribed for pigeons on Mona Island in order to give the reduced population of white-crowned pigeon (*Columba leucocephala*) a chance to recover.

No open season is prescribed for doves and pigeons on Culebra Island.

SPECIAL CLOSURE FOR PROTECTION OF THE PUERTO RICAN PARROT

No season is prescribed for doves and pigeons in those areas of the municipalities of Rio Grande and Loiza delineated as follows: (1) all lands lying east of Route 186 (from the town of El Verde in the north to the southernmost extent of Route 186) to the boundary of the Luquillo Experimental Forest; (2) all lands between Route 186 and Route 956 extending from an east-west line through the town of El Verde, south; (3) all lands lying west of Route 186 for one kilometer from the juncture of Routes 186 and 956 south to the southernmost point on Route 186; and (4) all lands within the Caribbean National Forest boundary, whether private or public lands. The purpose of these closures is to afford protection to the Puerto Rican parrot (*Amazona vittata*), presently listed as an endangered species under the Endangered Species Act of 1973.

SPECIAL CLOSURE FOR PROTECTION OF THE PLAIN PIGEON

The hunting of doves and pigeons of any species is prohibited in all of Cidra Municipality and in portions of Aguas Buenas, Caguas, Cayey, and Comerio Municipalities as encompassed within the following boundary: Beginning on Highway 172 as it leaves the Municipality of Cidra on the west edge, north to Highway 156, east on Highway 156

to Highway 1, south on Highway 1 to Highway 765, south on Highway 765 to Highway 763, south on Highway 763 to the Rio Guavate, west along Rio Guavate to Highway 1, southwest on Highway 1 to Highway 14, west on Highway 14 to Highway 729, north on Highway 729 to Cidra Municipality, and westerly, northerly, and easterly along the Cidra Municipality bounday to the point of beginning. The purpose of this closure is to protect the Puerto Rican Plain Pigeon (*Columba inornata*), locally known as Paloma Sabanero, which is known to be present in the above locale in small numbers and which is listed presently as an endangered species under the Endangered Species Act of 1973.

*Ducks, Coots, Gallinules, and Snipe.* A season of 55 consecutive days between December 1, 1979, and January 31, 1980, may be selected for hunting ducks, coots, common gallinules and common snipe.

Shooting hours may extend from one-half hour before sunrise until sunset daily.

The limits for ducks are 4 daily and 8 in possession except that the season is closed on ruddy ducks (*Oxyura jamaicensis*) and the Bahama pintail (*Anas bahamensis*), which are protected by the Commonwealth of Puerto Rico.

The limits for coots are 6 daily and 12 in possession.

The limits for common gallinules are 6 daily and 12 in possession. The season is closed on purple gallinules (*Porphyrula martinica*).

The limits for common snipe are 6 daily and 12 in possession.

No open season for ducks, coots, gallinules, and snipe is prescribed on Culebra Island.

PROPOSED FRAMEWORK FOR SELECTING OPEN SEASON DATES FOR HUNTING MIGRATORY BIRDS IN THE VIRGIN ISLANDS, 1979-80.

*Doves and pigeons.* A season of 60 days between September 1, 1979, and January 15, 1980, may be selected for hunting Zenaida doves throughout the Virgin Islands and scaly-naped pigeons on the island of St. Thomas only.

Shooting hours may extend from one-half hour before sunrise until sunset daily.

The daily bag and possession limits are 10 Zenaida doves and 5 scaly-naped pigeons.

No open season is prescribed for waterfowl, ground or quail doves, or other pigeons in the Virgin Islands.

LOCAL NAMES FOR CERTAIN BIRDS

Zenaida dove (*Zenaida aurita*)—mountain dove.

Bridled quail dove (*Geotrygon mystacea*)-Barbary dove, partridge (protected).

Ground dove (*Columbina passerina*)—stone dove, tobacco dove, rola, tortolita (protected).

Scaly-naped pigeon (*Columba squamosa*)-red-necked pigeon, scaled pigeon.

26. *Migratory game bird seasons for falconers.* (No change.)

SPECIAL FALCONRY FRAMEWORKS

Falconry is a permitted means of taking migratory game birds.

It is proposed that any State listed in 50 CFR 21.29(k) as meeting Federal falconry standards may select an extended season for taking migratory game birds in accordance with the following:

1. Seasons must fall within the regular season framework dates and, if offered, other special season framework dates for hunting.

2. Season lengths for all permitted methods of hunting within a given area may not exceed 107 days for any species.

3. Hunting hours shall not exceed ½ hour before sunrise to sunset.

4. Falconry daily bag and possession limits for all permitted migratory game birds shall not exceed 3 and 6 birds, respectively, singly or in the aggregate, during both regular hunting seasons and extended falconry seasons.

5. Each State selecting extended seasons shall report to the Service the results of the special falconry season by March 15, 1980.

6. Each State selecting the special season must inform the Service of the season dates and publish said regulations.

General hunting regulations, including seasons, hours, and limits, apply to falconry in each State listed in 50 CFR 21.29(k) which does not select an extended falconry season.

27. *Hawaii mourning doves.* (No change.) The mourning dove is the only migratory bird occurring in Hawaii in numbers to permit hunting. It is proposed that mourning doves may be taken in Hawaii in accordance with regulations set by the State of Hawaii as has been done in the past and subject to the applicable provisions of part 20 of Title 50 Code of Federal Regulations. Such a season must be within the constraints of applicable migratory bird treaties and annual regulatory frameworks. These constraints provide that the season must be within the period of September 1, 1979, and January 15, 1980, the length may not exceed 60 full days; the daily bag and possession limits may not exceed 10 and 20 doves, respectively. Shooting hours between one half hour before sunrise and sunset may be selected. Other applicable federal regulations relating to migratory game birds shall also apply.

II. PROPOSED BASIC REGULATIONS

The Service has been requested recently to modify regulations pertaining to methods of taking in order to provide paraplegics the opportunity to take migratory game birds from a stationary motor vehicle, Webster's Third International Dictionary (unabridged) defines paraplegics as "an individual afflicted with paraplegia" and defines paraplegia as "paralysis of the lower half of the body with involvement of both legs usually due to disease of or injury to the spinal cord." The Service has considered the matter and is of the opinion that the requested change in regulations would not be detrimental to the resource and would afford recreational opportunity to paraplegics. The Service is of the view, also, that single and double amputees of the legs, who are unable to hunt without the aid of a motor vehicle or other motor-driven land conveyance should be included.

1. Accordingly, the Service proposes to amend § 20.11 of 50 CFR Part 20, Subpart B—Definitions, by adding to this section the definition for "paraplegic." As amended, § 20.11 would read as follows:

**§ 20.11 Meaning of terms.**

* * * * *

*"Paraplegic"* means an individual afflicted with paralysis of the lower half of the body with involvement of both legs usually due to disease of or injury to the spinal cord.

* * * * *

2. Presently, § 20.21(d) of 50 CFR Part 20, Subpart C—Taking, states that no person shall take migratory game birds "from or by means, aid, or use of any motor vehicle, motor-driven land conveyance, or aircraft of any kind;".

In order to allow disabled (paraplegic) sportsmen the opportunity to take migratory game birds from a stationary motor vehicle or motor-driven land conveyance, the Service proposes to amend paragraph (d) of 50 CFR 20.21, Subpart C—Taking.

As amended, § 20.21(d) would read as follows:

**§ 20.21 Hunting methods.**

* * * * *

(d) From or by means, aid, or use of any motor vehicle, motor-driven land conveyance, or aircraft or any kind, except that paraplegics and single or double amputees of the legs may take from any stationary motor vehicle or motor-driven land conveyance;

* * * * *

Dated: February 9, 1979.

ROBERT S. COOK,
*Acting Director,*
*Fish and Wildlife Service.*

[FR Doc. 79-4803 Filed 2-14-79; 8:45 am]

federal register

THURSDAY, FEBRUARY 15, 1979

PART III

# CIVIL AERONAUTICS BOARD

## STATEMENTS OF GENERAL POLICY

Final Rules, Interim Rules, Proposed Rule, Request for Comments

[6320-01-M]

## Title 14—Aeronautics and Space

## CHAPTER II—CIVIL AERONAUTICS BOARD

### SUBCHAPTER F—POLICY STATEMENTS

[Reg. PS-82; Amdt. No. 61; Docket 34683]

## PART 399—STATEMENTS OF GENERAL POLICY

### Standard Industry Fare Levels for Intrastate Pairs of Points in California, Florida, and Texas; Interim Suspension Policy

AGENCY: Civil Aeronautics Board.

ACTION: Interim Rule.

SUMMARY: The Board is adopting an interim suspension policy, as part of our policies for domestic fares, on standard industry fare levels for intrastate pairs of points in California, Florida, and Texas which may be lower than the ceilings otherwise calculated according to the *DPFI* coach fare formula under our PS-80 policies. The basis for the intrastate ceilings will be the lowest, unrestricted fare between a pair of points on July 1, 1977, adjusted for intervening cost increases, plus ten percent. That fare is presumed to be the predominant fare in a market unless a showing is made that more passengers used a higher fare. The ceiling will be increased eight percent on July 1, 1979, and semiannually thereafter until January 1, 1981, at which time the fare determined according to the PS-80 ceiling formula will become the standard industry fare level for the market. This rule is being issued on an interim basis, effective immediately. Comments are being requested in a separate issuance published in today's FEDERAL REGISTER (PSDR-55).

DATES: Adopted: February 7, 1979. Effective: February 14, 1979.

FOR FURTHER INFORMATION CONTACT:

Steven K. McKinney, Trial Attorney, Bureau of Pricing and Domestic Aviation, 202-673-6064, or Mark Kahan, Assistant Chief, Pricing and Entry Division, Office of the General Counsel, 202-673-5205, Civil Aeronautics Board, 1825 Connecticut Avenue, N.W., Washington, D.C. 20428.

SUPPLEMENTARY INFORMATION: Adopted by the Civil Aeronautics Board at its office in Washington, D.C. February 7, 1979.

I. BACKGROUND

On October 24, 1978, the Airline Deregulation Act of 1978, Pub. L. 95-504, became law. One of the provisions of the new Act is section 105 which preempts the authority of the individual states to regulate the fares charged and routes flown by airlines authorized by the Board to engage in interstate air transportation. This section is set forth in its entirety in the margin.[1] Our mandate is unqualified—jurisdiction attaches automatically to all authority of any air carrier now or hereafter authorized by the Board to engage in interstate air transportation. We do not take this charge lightly. It is a well-known fact, one that pervades the legislative history of Pub. L. 95-504,[2] that intrastate carriers have provided some of the lowest cost, most efficient air carriage available to domestic travellers and that the presence of this highly competitive service, conducted profitably, has forced other airlines to reduce their fares or leave the market. As we formulate a program to implement the new Act, we not only must recognize this accomplishment but seek to preserve the benefits to the public of the underlying competitive forces.

At the same time, we must keep in mind the purpose of the preemption section—to introduce uniformity to the regulatory environment in which interstate air carriers operate. The emergence of intrastate carriers into interstate operations and the reduction of state regulatory controls, directly or indirectly, over their operations and those of other carriers now or subsequently engaged in both intrastate and interstate air transportation sets the stage for the merger of previously different systems from an operational as well as a regulatory standpoint. It is our obligation to oversee the merger of these sytems with as smooth a transition as practical for the airlines, passengers, local communities, state authorities, and others concerned. The Board is instituting two proceedings to lay down an interim policy and review these matters in the light of public comments. In Docket 34684, issued concurrently, we deal with all matters other than fares. This docket sets forth the Board's proposed fare policy.

In general, the new Act provides for zones of reasonableness applicable to interstate and overseas passenger fares. The zones are to be based upon fare levels in effect on July 1, 1977, adjusted per 1002(d)(6) with a 50 percent downward range effective as of the date of enactment and a 5 percent upward range effective July 1, 1979.[3]

---

[1] *Preemption.*—Section 105(a)(1) Except as provided in paragraph (2) of this subsection, no State or political subdivision thereof and no interstate agency or other political agency of two or more States shall enact or enforce any law, rule, regulation, standard, or other provision having the force and effect of law relating to rates, routes, or services of any air carrier having authority under title IV of this Act to provide interstate air transportation.

(2) Except with respect to air transportation (other than charter air transportation) provided pursuant to a certificate issued by the Board under section 401 of this Act, the provisions of paragraph (1) of this subsection shall not apply to any transportation by air of persons, property, or mail conducted wholly within the State of Alaska.

*Proprietary Powers and Rights.*—(b)(1) Nothing in subsection (a) of this section shall be construed to limit the authority of any State or political subdivision thereof or any interstate agency or other political agency of two or more States as the owner or operator of an airport served by any air carrier certificated by the Board to exercise its proprietary powers and rights.

(2) Any aircraft operated between points in the same State (other than the State of Hawaii) which in the course of such operation crosses a boundary between two States, or between the United States and any other country, or between a State and the beginning of the territorial waters of the United States, shall not, by reason of crossing such boundary, be considered to be operating in interstate or overseas air transportation.

*Existing State Authority.*—(c) When any intrastate air carrier which on August 1, 1977, was operating primarily in intrastate air transportation regulated by a State receives the authority to provide interstate air transportation, any authority received from such State shall be considered to be part of its authority to provide air transportation received from the Board under title IV of this Act, until modified, suspended, amended, or terminated as provided under such title.

*Definition.*—(d) For purposes of this section, the term "State" means any State, the District of Columbia, the Commonwealth of Puerto Rico, the Commonwealth of the Northern Mariana Islands, Guam, the Virgin Islands, and any territory or possession of the United States.

[2] *See,* for example, the Committee Report on S. 2493, Report No. 95-631 at p. 103; Comments of Senator Kennedy during floor debate of S. 2493, Congressional Record-Senate S5860, April 19, 1978; Comments of Senator Cannon during floor debate of S. 2493, Congressional Record-Senate S5865, April 19, 1978; and the Committee Report on H.R. 12611, Report No. 95-1211 at p. 2.

[3] *See* section 1002(d)(4). Fares within the zones will, after July 1, 1979, not be subject to a finding of unreasonableness, except to the extent they are predatory. The Board still has authority to determine the reasonableness of increases filed before July 1, 1979, by all carriers and thereafter by monopoly carriers [defined under section 1002(d)(4)(A)] and decreases that would be predatory under the proviso to 1002(d)(4)(B). We read sections 1002(d)(4)(A) and 1002(d)(4)(B) to also permit the suspension of such filings. All other fares set within the statutory zones would not be subject to suspension. *See* section 1002(g) which provides that the Board shall not suspend any proposed tariff unless the Board is empowered to find the proposed fare unjust or unreasonable *and* empowered to determine and prescribe the

Footnotes continued on next page

The Act also provides for a mechanism to update the resulting standard industry fare levels on not less than a semiannual basis [4] and expressly gives the Board power to increase the downward zone of reasonableness. [5] The "Rule of Ratemaking" in section 1002(e) and the Declaration of Policy under section 102(a), both amended, make clear the intent of Congress that we rely on competitive market forces, actual and potential, in exercising our responsibilities under the Act. [6] Lastly, the Act contains sunset provisions that terminate our authority to regulate fares in interstate and overseas air transportation by January 1, 1983.[7]

We must implement the broad policies inherent in this law, and in the process, interpret its meaning. How we exercise our powers will, of course, reflect the amended "Rule of Ratemaking" and Declaration of Policy. The new Act, in many respects, requires interpretation. Congress enacted the provisions on fares in Pub. L. 95-504 to gradually replace our responsibilities to regulate fares, and the zones defined in the Act are there because Congress, fully aware of the Board's recent actions giving carriers more pricing freedom, wanted to keep our policies from sliding back to the more restrictive ones of the past and to minimize risks from legal challenges to the innovations.[8] Congress has recognized our authority to approve lower fares, without statutorily imposed zones.[9] On fare increases, Congress understandably held more reservations than on downward flexibility, but they did not take away the Board's powers to approve fares above the statutory zones,[10] even though section 1002(d)(7) expressly authorizes the Board to increase the zone for fare decreases but does not mention increases.

We conclude that Congress has left us the responsibility and necessary authority to determine in a reasonable way what the standard industry fare levels are and to regulate fares outside of the related zones of reasonableness.

## II. The Board's Proposal

With the coming of preemption, we want to prevent a collision and, instead, promote a coalescence between the interstate fare policies promulgated by us in the *Domestic Passenger-Fare Rulemaking*, PS-80, Dockets 31290 and 30891,[11] and the existing fares of carriers formerly subject to separate policies developed by the respective States. In PS-80, we adopted the *DPFI* fare formula as the ceiling for our "no-suspend" zone policies. Those policies (1) permit carriers to set fares within broad zones relatively free from the risk of suspension; (2) replace uniform fares for all carriers in markets of equal distance with ceiling distance with ceiling fares; (3) provide downward fare filing flexibility of 50 percent [12] from the ceilings and upward flexibility of five and ten percent, depending upon the number of carriers authorized to serve a market; [13] and (4) eliminate the prescribed relationship between first-class and coach fares. We do not expect to change these policies drastically because of Pub. L. 95-504, but that will be the subject of another proceeding.

We are concerned, nevertheless, that abrupt changes in the intrastate fare systems that could result from preemption may work against a smooth, orderly transition from one set of standards, imposed by a separate jurisdiction, to our own. Our policies in PS-80 were obviously aimed at interstate markets, where the bulk of interstate markets, air transportation has existed, and not at the often protected, insular markets served by intrastate carriers. In PS-80, we expressly reserved our power to depart from its general policies in unusual or extraordinary circumstances. In markets where federal authority was not being exercised, or where prevailing fares charged were significantly below the ceilings adopted in PS-80, we propose to phase in the permissible levels to which fares may be raised without risk of suspension so that eventually the standards that apply to interstate pairs of points will apply to intrastate operations of interstate air carriers.

---

Footnotes continued from last page

lawful, or maximum, or minimum fare. With regard to fares within the zones that are not subject to a finding of unreasonableness but may be unjustly discriminatory, unduly preferential, or unduly prejudicial, the Board retains jurisdiction to investigate, but not to suspend, such fares and determine their lawfulness. *See* sections 1002(d)(1) and 1002(d)(2) and 404(b). In any proceeding under section 1002(d)(1), applicable to the interstate and overseas air transportation of persons, the party opposing any fare on the basis that it is too low has the burden of proof.

[4] Section 1002(d)(6)(B).

[5] Section 1002(d)(7).

[6] *See* introduction to Joint Explanatory Statement of the Committee of Conference, Conference Report on S. 2493, H. Rept. No. 95-1779, p. 53; Congressional Record-House H12650, October 12, 1978.

[7] Section 1601(a)(2).

[8] Comments of Senator Cannon during floor discussion of S. 2493, Congressional Record-Senate S5850, April 19, 1978; Representative Anderson (Calif.) in Committee of the Whole on H.R. 12611, Congressional Record-House H9842, September 14, 1978; Representative Johnson (Calif.) in Committee of the Whole on H.R. 12611, Congressional Record-House H9844, September 14, 1978.

[9] Representative Levitas in Committee of the Whole on H.R. 12611 stated that "much of what needs to be done to improve the regulatory system could be done under inherent powers of the Civil Aeronautics Board in existing law." Congressional Record-House H9845, September 14, 1978; Representative Ertel in Committee of the Whole on H.R. 12611 commented that there was a need for legislation "to catch up with the CAB," Congressional Record-House H9846, September 14, 1978.

[10] *See* Comments of Senators Magnuson and Stevenson, respectively, during floor discussion of S. 2493, Congressional Record-Senate S5859 and 5898, April 19, 1978.

[11] Amends Part 399—Statements of General Policy on Domestic Passenger-Fare Level, Structure, and Discount Fares, 43 FR 39522, September 5, 1978.

[12] Policy Statement.

399.31(f) Each carrier should have the opportunity to set fares in each market within a zone ranging to 50 percent below the ceiling fares. Also, on 40 percent of their weekly available seat miles, carriers should have the opportunity to set fares in each market down to a 70 percent level below the ceiling. Fares within these zones will not be suspended by the Board on account of the reasonableness of the level of the fare absent the following extraordinary circumstances:

(1) the high probability that the fare would be found to be unlawful after investigation;

(2) the substantial likelihood that the fare is predatory so that there would be an immediate and irreparable harm to competition if it were allowed to go into effect;

(3) the harm to competition would be greater than the injury to the travelling public if the proposed fare were unavailable; and

(4) the suspension is in the public interest;

(g) Carriers should be free to set market fares below these minima on the basis of such factors as their individual costs or specialized marketing needs, unless the level of the proposed fare reductions will result in an inability of the carriers in the market to provide adequate service to the public or the fares are otherwise unlawful.]

[13] Policy Statement.

399.31(h) Each carrier should have the opportunity to set fares above the ceiling fares as follows:

(1) in markets where four or more interstate and intrastate carriers are authorized to provide nonstop service either on an unrestricted or restricted basis,[1] each carrier should have the opportunity to set fares in a zone ranging up to 10 percent above the fare ceiling;

[1] Carriers in a market having only fill-up authority or who cannot carry local traffic will not be counted.

(2) in markets where two or three interstate or intrastate carriers are authorized to provide nonstop service either on an unrestricted or restricted basis,[2] each carrier should have the opportunity to establish fares in a zone ranging up to 5 percent above the ceiling on 110 days throughout the year; and

[2] Carriers in a market having only fill-up authority or who cannot carry local traffic will not be counted.

(3) in monopoly markets, the carriers should have the opportunity to establish fares in a zone ranging up to 5 percent above the ceiling on 58 days throughout the year;

Fares within these zones will not be suspended by the Board on account of the reasonableness of the level of the fare absent a showing of unusual or extraordinary circumstances.

We propose to adopt, and will rely upon immediately for suspension purposes during the interim before finalization, a standard industry fare level for each intrastate pair of points based on the predominant fares in effect on July 1, 1977, adjusted for subsequent changes in costs as required by section 1002(d)(6), plus ten percent, provided that the ceiling fare determined under our policies for interstate fares (*i.e.*, PS-80) would not be exceeded. For markets where the predominant fare was at least 90 percent of the *DPFI* formula fare, the *DPFI* fare would be the ceiling fare. The fare ceilings, so determined, would be the ceiling on a "no-suspend" zone applicable to fare increases for each intrastate pair of points. The additional upward fare flexibility provided under our policies in PS-80 for interstate fares (ten percent in workably competitive markets and five percent in markets with a check on monopoly power) would likewise be afforded on top of the ceiling. On July 1, 1979, the "no-suspend" zone would become a zone of reasonableness as required by section 1002(d)(4),[14] and our powers to suspend fares within the zone would be limited to those which appear to be predatory. As of July 1, 1979, we propose to raise the ceiling on fares between intrastate pairs of points by eight percent and, thereafter, by an additional eight percent every six months until the fares in those markets reach the ceilings determined by our policies for interstate fares or January 1, 1981, whichever occurs first, when the PS-80 ceiling will be the standard industry fare level.

It is not our design to disturb the underlying findings, to the extent still applicable, in *Interstate and Intrastate Fares in California and Texas Markets*, Docket 24779,[15] that differences between fares charged interstate and intrastate passengers by federally certificated carriers were unjustly discriminatory and this unjust discrimination should be eliminated by the establishment of a single level of fares. However, our conclusion that the *DPFI* fares would be the fare charged, except that such fares could be lowered to meet competition from intrastate carriers, has been radically altered, of course, by the subsequent implementation of our *DPFI* Rulemaking (PS-80) and the enactment of P.L. 95-504. Because we no longer require carriers to charge fares determined by the *DPFI* fare formula, this element in our previous decision on *Interstate and Intrastate Fares* has become moot. Nevertheless, the fact that an interstate carrier was on July 1, 1977, charging the *DPFI* fare between a pair of points intrastate is relevant to a showing of which fare in that market was the predominant fare. By the same token, if an interstate carrier were charging the intrastate fare under our Order 77-4-22 modifying a partial stay of our decision in the *Interstate and Intrastate Fares* case (in Order 77-4-22, we permitted carriers to maintain either dual fares in markets where they did not compete with intrastate carriers or a single fare level in such markets for both interstate and intrastate passengers at the intrastate level), that fare would have been in effect on July 1, 1977.

Our tentative solution, as stated above, is to accommodate the interests involved by permitting gradual increases in the ceilings until they reach interstate levels at which time uniform regulations would be achieved in all of the markets subject to our jurisdiction, interstate and intrastate, served by interstate carriers. Our proposal consists essentially of two parts. First, between the effective date of this rule and July 1, 1979, the standard industry fare level between intrastate pairs of points will be the fare used on or about July 1, 1977, by a predominant number of passengers travelling between those points, updated according to section 1002(d)(6), plus an additional ten percent. As a practical matter, this would generally be the prime time, unrestricted, lowest K fare (commuter class) in the California markets and the S fare (standard class) in the Florida and Texas markets.[16] Carriers seeking a higher standard either for a market or for their own class of service would have the burden of justifying it.[17] Second, beginning on July 1, 1979, we would increase the standard industry fare levels as adjusted for increases in costs by an increment of eight percent then and every six months thereafter until January 1, 1981, at which time the PS-80 ceiling fare would become the standard industry fare level. In this manner, the standard industry fare levels effective between now and July 1, 1979 would be adjusted subsequently for interim changes in costs, then by an additional eight percent, on that date and every six months thereafter until January 1, 1981, or when the PS-80 ceilings are reached, whichever occurs first. The dates for the periodic increases will be as follows:

*July 1, 1979:* 8 percent.
*January 1, 1980:* 8 percent.
*July 1, 1980:* 8 percent.
*January 1, 1981:** Ceiling for interstate fares.

To illustrate the application of this fare policy, we will use the Los Angeles-San Francisco market as an example. Following is an array of fares in the market for July 1, 1977:

| Carrier | Fare Class[1] | Dollar Amount | |
|---|---|---|---|
| | | Intrastate | DPFI |
| TW | F | $34.80 | |
| UA | F | 35.40 | |
| CO | F | 73.00 | $73.00 |
| RW | S | 26.00 | |
| NW, PA, BN, CO | Y | | 49.00 |
| | FN | 34.70 | |
| UA | FN | 35.40 | |
| | YN | 25.50 | |
| UA | YN | 25.95 | |
| PSA | [2]K | 25.95 | |
| UA | [2]K | 25.95 | |
| CO | [3]K | 27.75 | |

[1]F=first class; S=standard class; Y=coach class; FN=deluxe night coach; YN=night coach.
[2]K=commuter.
[3]K=economy.

The basis for a standard industry fare level for this market would be the

[14]This section provides that fare increases, either 50 percent below or five percent above the standard industry fare level in nonmonopoly markets, will no longer be subject to the Board's authority to find any fare unjust or unreasonable (excepting fares that are predatory):

1002(d)(4) The Board shall not have authority to find any fare for interstate or overseas air transportation of persons to be unjust or unreasonable on the basis that such fare is too low or too high if—

(A) with respect to any proposed increase filed with the Board on or after July 1, 1979 (other than any proposed increase in any fare filed by any air carrier if such proposed fare is for air transportation between any pair of points and such air carrier provides air transportation to 70 per centum or more of the persons traveling in air transportation between such points on aircraft operated by air carriers with certificates issued under section 401 of this Act), such proposed fare would not be more than 5 per centum higher than the standard industry fare level for the same or essentially similar class of service, except that, while no increase of any fare within the limits specified in this subparagraph may be suspended, an increase in such fare, above the standard industry fare level shall be found unlawful if that increase results in a fare which is unduly preferential, unduly prejudicial, or unjustly discriminatory; or

(B) with respect to any proposed decrease filed after the date of enactment of this paragraph, the proposed fare would not be more than 50 per centum lower than the standard industry fare level for the same or essentially similar class of service, except that this provision shall not apply to any proposed decrease in any fare if the Board determines that such proposed fare would be predatory.

[15]Order 76-7-23, 76-10-138, 77-1-137, and 77-4-22; *affirmed, People of the State of California v. CAB*, 581 F.2d 954 (C.A.D.C. 1978); *cert. denied*, U.S. Supreme Ct. Nos. 78-417 and 78-447.

[16]*See* Appendix A for a sampling of fares in intrastate markets.

[17]For markets where the *DPFI* fare was being offered pursuant to our determinations in *Intestate and Intrastate Fares in California and Texas Markets*, Docket 24779, Orders 76-7-23, 76-10-138, 77-1-137, and 77-4-22, a showing that this fare was the predominant fare would still be required.

*This should be the PS-80 formula fare which, in most intrastate markets, is now approximately 30 to 40 percent above the prevailing intrastate fares.

PSA fare of $25.95. It is the lowest standard fare offered by a carrier who operated large scale competitive levels of service in this market; consequently, we assume that it was the predominant fare paid by passengers between Los Angeles and San Francisco. This would, of course, be updated as required by section 1002(d)(6) in accordance with the method shown on Appendix B in order to obtain a standard industry fare level, and we propose to add ten percent to the adjusted fare in order to establish a ceiling fare for the "no-suspend" zone effective until July 1, 1979. For the market, the ceiling would be $32.00, as adjusted according to section 1002(d)(6) and projected forward with anticipatory costs through March 30, 1979, and including an additional ten percent. This standard would increase an additional eight percent plus an allowance for interim changes in costs on July 1, 1979. We recognize that in some markets containing an array of fares, the lowest unrestricted fare may not be the predominant fare. Our assumption to that effect is rebuttable. Those carriers who urge a higher fare, however, have the burden to demonstrate its predominance. For example, in the Miami-Tampa market, there were four basic unrestricted fares in effect on July 1, 1977, as follows:

| Carriers | Fare Class | Dollar Amount | |
|---|---|---|---|
| | | Intrastate | DPFI |
| NW, DL, EA, NA, TW. | F | ..... | $54.00 |
| NW, DL, EA, NA, TW. | Y | ..... | 36.00 |
| QH | S | $30.00 | ..... |
| QH | K | 18.00 | ..... |

We would here recognize the trunk-line "Y" fare as the predominant fare, based simply on the predominance of service offered at that fare.[18]

The result of our policy would, using the Eureka/Arcata-San Francisco market as an example, produce a ceiling of $38 on current fares there instead of the $47 permitted under our PS-80 policies (see Appendix A, p. 4). It is, however, not our intention to force a rollback of fares. Fares in effect on the date our proposed policy becomes effective would not be subject to refiling. However, to the extent they exceeded the applicable standard industry fare level, increases would not be permitted until the standard exceeded the existing fare or a showing were made that an increase was otherwise justified.

Before Congress enacted the section on preemption, they expressed concern that the marriage of the two systems, intrastate and interstate, be accomplished in a manner serving the common interests of the airlines, passengers, communities, and states.[19] Our proposed solution would establish a standard industry fare level for fares between intrastate points in California, Florida, and Texas[20] which takes into account the differences between the fares actually charged on July 1, 1977, and the *DPFI* formula fares, but simultaneously assures the attainment of the objective of preemption: the replacement of the double layer of regulations so that local policies which may conflict with the pro-competitive policies of Congress are removed.[21]

It is clear that we have the authority to provide for different standard industry fare levels between intrastate and interstate pairs of points. The Act describes the term "standard industry fare level" as follows:

> * * * "standard industry fare level" means the fare level (as adjusted only in accordance with subparagraph (B) of this paragraph) in effect on July 1, 1977, for each interstate or overseas pair of points, for each class of service existing on that date, and in effect on the effective date of the establishment of each additional class of service established after July 1, 1977. * * * [Section 1002(d)(6)(A)]

We believe that this description leaves us some discretion to decide, and does not prescribe, what the standard industry fare level is for the intrastate pairs of points. Neither the Act nor legislative history provide a ready definition of "standard industry fare level." We are thus confronted with the question what Congress intended as a standard industry fare level in markets between intrastate pairs of points. At the outset, we observe first that the statutory definition of "standard industry fare level" clearly requires a market-by-market analysis. It also appears that a "standard industry fare level" and the fares in effect on July 1, 1977, need not always be identical. This distinction is expressed in the legislative history.[22] Although there can be little question as to a "standard industry fare level" for fares charged between interstate pairs of points where our policies in the summer of 1977 prescribed uniform industry fares related to average costs in all markets of equal distance, the statutory definition of that term is subject to more than one reasonable interpretation with regard to markets between intrastate pairs of points. The first is that the term "standard industry fare level" means the fares in effect on July 1, 1977, in any given intrastate market. The second is that it means the fare level related to average costs as determined by the *DPFI* fare formula, whether or not a fare equivalent to that level was actually in effect on July 1, 1977. The former meaning—fares in effect—may be read to represent what the words in the statute describe, a "fare level * * * in effect on July 1, 1977, for each * * * pair of points, for each class of service. * * *" Moreover, there were intrastate pairs of points on July 1, 1977, served only by intrastate carriers, and there was no *DPFI* fare level applicable then to those markets.[23] Likewise, in the intrastate markets where interstate carriers operated, we permitted fares lower than those required by our *DPFI* fare level because of intrastate carrier competition. Despite this affinity between fares in effect and the statutory definition of fare level, the second meaning of "standard industry fare level"—an average cost fare formula—similarly fits the mold of the statutory definition. This is clearly the manner in which Congress understood the *DPFI* fare formula, and, as indicated previously, there was discussion in floor debate which reflects an average costs approach to the establishment of a fare level.[24]

[18] *See* Official Airline Guide, July 1, 1977.

[19] Originally, the Senate bill 2493 contained a provision which would have limited our jurisdiction over carriers serving intrastate markets to those receiving more than 50 percent of their revenues from interstate operations. In the floor debate on S. 2493, Senator Cranston opposed an amendment to eliminate the shared jurisdiction concept in that bill (later eliminated by House-Senate compromise):

> * * * The situation today in California is such that our State public utilities commission estimates that Federal preemption of State regulation of intrastate air routes would result in higher, not lower, air fares for the thousands of Californians and visitors to our State flying the high density routes between Los Angeles and San Francisco, Oakland, Sacramento, and San Diego. (Congressional Record-Senate S5890, April 19, 1978.)

Also see comments of Senator Bentsen on the House-Senate Conference Report on S. 2493, Congressional Record-Senate S18799, October 14, 1978.

[20] Other states would not be covered by the policy proposed unless a showing is made that they be included. Otherwise, our policies in PS-80 for interstate fares would apply.

[21] *See* comments of Senator Heinz in floor debate on S. 2493 where he proposed to amend the bill in order to eliminate the shared jurisdiction concept (later adopted by House-Senate Conferees), Congressional Record-Senate S5890, April 19, 1978. *See* Note 19, *supra*.

[22] *See* comments of Senator Magnuson regarding the embodiment of an average cost concept in the term "standard industry fare level," Congressional Record—Senate S5859, April 19, 1978.

[23] For example, see Appendix A. Whenever one of these carriers receives authority from the Board to provide interstate air transportation, the standard industry fare level applies to its intrastate operations. *See* section 105, note 1, *supra*.

[24] *See* Note 22 on page 12, *supra*. Also, see reference in Committee Report on H.R. 12611, Report No. 95-1211 at p. 9 which describes the Board's *DPFI* formula:

> * * * The Board in the early 1970's established a formula for determining coach and first-class fares. Under the formula, the fare

Footnotes continued on next page

What we are left with are two reasonable interpretations of what a "standard industry fare level" should be for a market between intrastate pairs of points. The differences between the ceilings measured by one or the other interpretation can be significant.[25] We have thus turned to the preemption provision in the Act, and its legislative history, in order to determine what the meaning of "standard industry fare level" is for intrastate pairs of points. On the one hand, it is clear that Congress did not intend that the benefits of low, intrastate fares be wiped out by preemption. At the same time, the ultimate objective of preemption is uniformity of policy, both statutory and agency, for the routes and fares of carriers subject to our jurisdiction.[26] It is, therefore, appropriate to implement policies now that both assure that the ceilings applicable under our policies for interstate carriage (PS-80 and its progeny) within the 48 contiguous states will ultimately apply to the intrastate services of carriers authorized by us to provide interstate air transportation, and, at the same time, to ensure that competition has an opportunity to begin working before sharp increases in existing fares are permitted. Our proposed solution reconciles the often disparate relationships between fares in effect on July 1, 1977, for intrastate pairs of points and our *DPFI* fare levels, on the one hand, and the objective of preemption, on the other.

We have given considerable weight to the new "Rule of Ratemaking" and Declaration of Policy in the Act.[27] While they shift the locus of Board concerns to a more price and service competitive environment, the factors stated remind us that adequate service (especially to smaller communities and satellite airports), low fares, the effect of prices on the movement of traffic, encouragement of entry, and a responsive regulatory environment are all in the public interest and are factors which the Board must take into consideration in exercising its powers over fares.[28] These factors do not always lead us in the same direction.

In the short run, a policy which permits relatively higher fares may do more to preserve and encourage service to smaller communities and satellite airports than would a policy restricting increases. On the other hand, a policy which restricts fare increases will protect the consumer during the transition to a more freely competitive environment. Over the longer term, however, as more liberal entry and flexible pricing policies move the air transportation industry closer to a competitive environment, many of these seemingly conflicting factors will begin to undergo a fusion so that market forces through competitive entry and pricing will join to provide adequate levels of service as well as lower fares. Past regulatory policies, both state and federal, that have restricted entry have tended to restrain competitive forces so that they have not had a chance to work. Our policies now are providing a competitive environment where fares will not necessarily rise, but, as we have seen in many interstate markets, may go down, and where service levels should be more responsive to the needs of the public. If we were to lock carriers into their actual fares in effect on July 1, 1977, as the standard industry fare levels for these markets, we create the risk of withdrawals of equipment and reductions in service levels by incumbents who, under our more liberalized entry and exit policies, may seek higher returns in other markets promising more upward pricing latitude.[29] This result is not in the short-run interests of the travellers and communities accustomed to existing levels of service in intrastate markets.[30] On the other hand, if we were to permit immediate increases in intrastate fares to permissible *DPFI* formula levels, interstate carriers would in many markets be able to raise fares sharply without the prospect of interference by state regulators. This result, at least in the near term, certainly does not benefit travellers who must either pay the higher fare or travel by other means.[31] We so-

---

Footnotes continued from last page

level is determined by the average costs of all carriers. * * *

[25] *See* discussion on page 10, *supra*, of fares in effect and the *DPFI* fare levels on July 1, 11977, and Appendix A.

[26] *See* comments of Senator Cannon during debate of S. 2493, Congressional Record—Senate S5890, April 19, 1978.

[27] Sections 1002(e) and 102(a).

[28] Section 1002(d), the "Rule of Ratemaking," provides:

In exercising and performing its power and duties with respect to determining rates, fares, and charges described in paragraph (1) of subsection (d) of this section, the Board shall take into consideration, among other factors—

(1) the criteria set forth in section 102 of this Act;

(2) the need for adequate and efficient transportation of persons and property at the lowest cost consistent with the furnishing of such service;

(3) the effect of prices upon the movement of traffic;

(4) the desirability of a variety of price and service options such as peak and off-peak pricing or other pricing mechanisms to improve economic efficiency and provide low-cost air service; and

(5) the desirability of allowing an air carrier to determine prices in response to particular competitive market conditions on the basis of such air carrier's individual costs.

Section 102(a), the Declaration of Policy for Interstate and Overseas Air Transportation, contains several factors as being in the public interest which militate towards a gradual implementation of higher intrastate fares:

(a) In the exercise and performance of its powers and duties under this Act with respect to interstate and overseas air transportation, the Board shall consider the following, among other things, as being in the public interest, and in accordance with the public convenience and necessity;

* * * * *

(3) The availability of a variety of adequate, economic, efficient, and low-price services by air carriers without unjust discriminations, undue preferences or advantages, or unfair or deceptive practices, the need to improve relations among, and coordinate transportation by, air carriers, and the need to encourage fair wages and equitable working conditions.

(4) The placement of maximum reliance on competitive market forces and on actual and potential competition (A) to provide the needed air transportation system, and (b) to encourage efficient and well-managed carriers to earn adequate profits and to attract capital.

(5) The development and maintenance of a sound regulatory environment which is responsive to the needs of the public and in which decisions are reached promptly in order to facilitate adaptation of the air transportation system to the present and future needs of the domestic and foreign commerce of the United States, the Postal Service, and the national defense.

(6) The encouragement of air service at major urban areas through secondary or satellite airports, where consistent with regional airport plans or regional and local authorities, and when such encouragement is endorsed by appropriate State entities encouraging such service by air carriers whose sole responsibility in any specific market is to provide service exclusively at the secondary or satellite airport, and fostering an environment which reasonably enables such carriers to establish themselves and to develop their secondary or satellite airport services.

* * * * *

(8) The maintenance of a comprehensive and convenient system of continuous scheduled airline service for small communities and for isolated areas, with direct Federal assistance where appropriate. * * *

* * * * *

(10) The encouragement of entry into air transportation markets by new air carriers, the encouragement of entry into additional air transportation markets by existing air carriers, and the continued strengthening of small air carriers so as to assure a more effective, competitive airline industry.

[29] As we have indicated, *supra*, intrastate fares have been held below *DPFI* fares in many markets because of state regulatory policies and/or lower-cost intrastate operations. *See* Appendix A, for examples. The opportunity afforded by our more liberal policies to exit and enter an interstate market with a higher permissible fare level could prove enticing to a carrier serving a low fare, thin intrastate market. We say that this is a risk, rather than a certainty, because we cannot predict how a carrier might react in any given set of circumstances.

[30] The prospect of relatively lower fare levels may also deter new entry by potential competitors into markets where intrastate ceilings were imposed.

[31] The opportunity to charge relatively higher fares in some intrastate markets not served by a purely intrastate carrier still

Footnotes continued on next page

riously doubt that Congress intended fares to double overnight in these markets without risk of Board scrutiny. The reallocations of scarce resources that follow from either approach—an intrastate fare ceiling or a *DPFI* fare ceiling—cannot be avoided completely under any approach. The incentives, however, whether artificial or real, can be reduced by the phased approach exemplified by our proposal.

We have the authority to do what we propose. As we previously observed, the ambiguity of the Act in this area requires us to interpret the meaning of the standard industry fare levels under section 1002(d)(6), and to rationalize the conflicting interpretations in a manner that maximizes the different statutory policies. The Board, moreover, retains its general powers under section 204(a) to administer the Act as we deem necessary to carry out its provisions and to exercise and perform our powers and duties under it; and there can be no question that our proposed policy conforms to those factors articulated by Congress as being in the public interest.[32] We have tried to avoid overly dogmatic analyses to rationalize a result which we believe is right. Our proposal is sound and founded on the Act. Those persons affected or otherwise interested now have ample opportunity to persuade us that our preliminary formulations should be modified.

Therefore, we adopt for immediate effectiveness an interim suspension policy applicable to fare increases filed for air transportation between intrastate pairs of points in California, Florida, and Texas. This policy will provide ceiling fares (standard industry fare levels) for such pairs of points based upon the predominant fare charged in those markets on July 1, 1977, as adjusted per section 1002(d)(6) of the Act, plus ten percent. For purposes of determining the ceiling fare, we will presume that it was the lowest, unrestricted fare charged, provided that a higher fare may be justified as the ceiling for a pair of points upon a showing that more passengers used it than used the lower fare. On and after July 1, 1979, these ceilings would become the standard industry fare levels for a zone of reasonableness. On that date, we propose also to begin raising the ceilings eight percent semiannually until January 1, 1981, when the PS-80 formula fare level will become the standard.

Because the Airline Deregulation Act requires immediate application of its provisions on fares, the Board finds, for good cause shown, that notice and public procedure are contrary to the public interst, and that the interim rule should be made effective immediately. However, by a notice in this issue of the FEDERAL REGISTER, the Board is soliciting public comments on the interim rule. The Board will then reconsider the interim rule in light of the comments.

We find and conclude that our proposal is not a major federal action significantly affecting the environment. The purpose of these policies is to minimize, over the near term, changes which might otherwise occur to fares and existing service levels in the markets affected. In those markets where PS-80 ceilings already dominate, we have previously made findings on the environmental implications of the related policies.

Accordingly, we find and conclude that we should adopt the following as an interim suspension policy:

INTERIM RULE

The Board amends, on an interim basis, § 399.33 of 14 CFR Part 399, *Statements of General Policy*, to read as follows:

§ 399.33 Domestic passenger fare-structure policies.

The Board's policy on the structure of passenger fares for scheduled services by trunk and local service carriers in markets within the 48-contiguous states and the District of Columbia is as follows:

(a) Ceiling trunk coach fares[1] for trips of any given distance should be based upon the fare formula established by the Board in Phase 9 of the Domestic Passenger-Fare Investigation (Docket 21866-9) as adjusted by the Board's fare level standards and for cost increases in all markets except intrastate pairs of points within the states of California, Florida, and Texas where ceiling fares should be based upon the predominant fare charged on July 1, 1977, adjusted for cost increases, plus ten percent,[2] provided that this ceiling will be raised eight percent on July 1, 1979, and every six months thereafter as adjusted for cost increases until January 1, 1981,[3] at which time the ceiling will be the DPFI formula; coach fare proposals priced above this ceiling or the upper limits specified under section 399.31(h) should be suspended unless otherwise justified;[4] carriers may propose fares lower than the ceiling in individual markets;

(b) Carriers should be free to set the level of first-class fares; and

(c) There should be joint fares in all markets over all routings at a level not to exceed the sum of the maximum local fares permitted by this policy statement minus one tax-rounded coach ceiling terminal charge for each interline connection. All required joint fares should be divided according to the relative costs of the mileage flown by each carrier participating in the interline movement, provided, however, that where joint fares are based on the actual sum of the local fares, each carrier should get the local fare as its share of these joint fares.

(Secs. 204, 403, 404, and 1002 of the Federal Aviation Act of 1958, as amended; 72 Stat. 743, 758, 760 and 788, as amended; 49 U.S.C. 1324, 1373, 1374, and 1482; and 5 U.S.C. 553).

By the Civil Aeronautics Board.

PHYLLIS T. KAYLOR,
*Secretary.*

---

Footnotes continued from last page

subject to state regulation could also lead interstate carriers to transfer equipment out of the intrastate markets subjected to state-imposed ceilings to these more lucrative markets.

[32] *See* discussion on pp. 13-14 and *Permian Basin Area Rate Cases*, 390 U.S. 747, 767, 88 S.Ct. 1344, 1360 (1968) re an agency's powers to devise methods of regulation capable of equitably reconciling diverse and conflicting interests.

[1] The Board's policy with regard to the coach, regional or jet custom fares of local service carriers appears on section 399.32 of this Part.

[2] It is presumed that the lowest, unrestricted fare in effect on July 1, 1977, for a market was the predominant fare; however, this presumption may be rebutted by a showing that more passengers used a higher fare. If the predominant fare is at least 90 percent of the DPFI ceiling, it would be the ceiling.

[3] Or when the fares reach the DPFI formula ceiling, if that occurs before January 1, 1981.

[4] For peak fares above any of these levels, the justification should include a showing that off-peak fares are available in the market.

[6320-01-C]

APPENDIX A.—FARES IN SELECTED INTRA-STATE MARKETS
June, 1977, December, 1978, and Ceiling Fare Levels

| City Pair, Mileage, and Carriers | June, 1977 1/ Fare Class | Fare | December, 1978 1/ Fare Class | Fare | D.P.F.I Fare "Y" Class June | Dec | Ceiling Fare Fare Class | Fare |
|---|---|---|---|---|---|---|---|---|
| Miami - Tampa (MIA-TPA) | | | | | | | | |
| 204 miles | F | 54.00 | F | 47.00 | 37.00 | 41.00 | | |
| DL, EA, NA, NW | (AG) A | 40.00 | (AG) A | 30.00 | | | | |
| TW, BN | (QH) S | 30.00 | (QH) S | 38.00 | | | | |
| | Y | 36.00 | Y | 39.00 | | | Y | 41.00 |
| AG (Air Sunshine) | FN | 36.00 | FN | 39.00 | | | | |
| QH (Air Florida) | YN | 29.00 | YN | 31.00 | | | | |
| | (QH) K | 18.00 | (QH) K | 18.00 | | | | |
| | | | K | 35.00 | | | | |
| Miami - Tallahassee (MIA-TLH) | | | | | | | | |
| 403 miles | F | 87.00 | F | 72.00 | 56.00 | 62.00 | | |
| EA, SO, NA | (QH) S | 50.00 | (QH) S | 59.00 | | | | |
| | S | 56.00 | S | 60.00 | | | | |
| QH (Air Florida) | Y | 56.00 | (SO) SL | 52.00 | | | Y | 62.00 |
| | (QH) K | 25.00 | Y | 60.00 | | | | |
| | | | FN | 60.00 | | | | |
| | | | (QH) K | 29.00 | | | | |
| Miami - Melbourne (MIA - MLB) | | | | | | | | |
| 160 miles | F | 48.00 | F | 42.00 | 32.00 | 36.00 | | |
| EA, NA | Y | 32.00 | Y | 35.00 | | | Y | 36.00 |
| | FN | 32.00 | FN | 35.00 | | | | |
| | YN | 26.00 | YN | 28.00 | | | | |
| Dallas/Ft. Worth - Houston (DFW-IAH) (DAL-HOU) | | | | | | | | |
| 224 miles | F | 58.00 | F | 50.00 | 39.00 | 43.00 | | |
| TI, BN | (FY)A | 43.00 | FN | 42.00 | | | | |
| | (WN)S | 25.00 | (WN) S | 28.00 | | | S | 31.00 |
| | (TI)V | 15.00 | (TI) V | 18.00 | | | | |
| WN (Southwest) | (TI)S | 39.00 | (TI) S | 42.00 | | | S | 43.00 |
| FY (Metroflight) | Y | 39.00 | Y | 42.00 | | | | |
| | (WN)K | 15.00 | (WN) K | 18.00 | | | | |
| | (TI)K | 25.00 | (TI) K | 28.00 | | | | |
| | | | YN | 34.00 | | | | |
| El Paso - Midland/Odessa (ELP-MAF) | | | | | | | | |
| 247 miles | F | 61.00 | F | 53.00 | 41.00 | 46.00 | | |
| CO, TI | Y | 41.00 | Y | 44.00 | | | Y | 46.00 |
| | FN | 41.00 | FN | 44.00 | | | | |
| WN (Southwest) | YN | 33.00 | YN | 35.00 | | | | |
| | K | 37.00 | K | 28.00 | | | | |
| | KN | 30.00 | (WN) S | 28.00 | | | | |
| | | | (WN) K | 18.00 | | | | |
| Harlingen - San Antonio (HRL-SAT) | | | | | | | | |
| 233 miles | (WN) S | 25.00 | (WN) S | 28.00 | 39.00 | 44.00 | S | 31.00 |
| TI | (WN) K | 15.00 | (WN) K | 18.00 | | | | |
| WN (Southwest) | | | | | | | | |
| Sacramento-San Diego (SMF-SAN) | | | | | | | | |
| 480 miles | (WA) K | 32.05 | S | 40.00 | 63.00 | 70.00 | | |
| RW, UA, WA | (PS) K | 32.30 | Y | 68.00 | | | | |
| | (OC) K | 32.19 | K | 30.00 | | | | |
| PS (Pacific Southwest) | | | (WA) K | 32.55 | | | | |
| OC (Air California) | | | (WA) KL | 24.00 | | | | |
| | | | (PS) KL | 25.00 | | | | |
| | | | (PS) K | 40.00 | | | K | 40.00 |
| San Diego - Stockton (SAN-SCK) | | | | | | | | |
| 423 miles | (PS) K | 31.75 | (PS) K | 40.00 | 57.00 | 64.00 | K | 40.00 |
| UA, RW | | | | | | | | |
| PS (Pacific Southwest) | | | | | | | | |
| Long Beach - San Jose (LBB-SJC) | | | | | | | | |
| 324 miles | (PS) K | 26.95 | (PS) K | 32.00 | 48.00 | 54.00 | K | 33.00 |
| | | | (PS) KL | 20.00 | | | | |

1/ Official Airline Guide, North American Edition.

APPENDIX A.—FARES IN SELECTED INTRA-STATE MARKETS—Continued

June, 1977, December, 1978, and Ceiling Fare Levels

| City Pair, Mileage, and Carriers | June, 1977 1/ Fare Class | June, 1977 1/ Fare | December, 1978 1/ Fare Class | December, 1978 1/ Fare | D.P.F.I Fare "Y" Class June | D.P.F.I Fare "Y" Class Dec. | Ceiling Fare Fare Class | Ceiling Fare Fare |
|---|---|---|---|---|---|---|---|---|
| Monterey - San Francisco (MRY-SFO) | | | | | | | | |
| 77 miles | F | 20.30 | C | 21.00 | 25.00 | 28.00 | | |
| UA, RW | Y | 16.00 | S | 16.00 | | | Y | 20.00 |
| | S | 18.34 | (RW) C | 23.00 | | | | |
| DK (California Air) | (DK) A | 21.60 | Y | 13.30 | | | | |
| PS (Pacific Southwest) | | | (UA) Y | 14.00 | | | | |
| | | | K | 10.00 | | | | |
| | | | (PS) K | 15.00 | | | | |
| | | | (PS) KL | 10.00 | | | | |
| | | | (RW) K | 18.34 | | | | |
| | | | Q | 10.00 | | | | |
| Bakersfield - Sacramento (BFL-SMF) | | | | | | | | |
| 265 miles | (WI) A | 37.50 | A | 40.50 | 42.00 | 47.00 | | |
| UA, RW | | | C | 34.00 | | | | |
| | | | (WI) A | 40.50 | | | | |
| WI (Swift-aire) | | | (RW) C | 37.00 | | | | |
| | | | K | 29.60 | | | K | 29.60 |
| Eureka/Arcata - San Francisco (ACV-SFO) | | | | | | | | |
| 257 miles | S | 30.93 | (IK) A | 40 00 | 42.00 | 47.00 | | |
| RW | (IK)A | 36:99 | C | 36.00 | | | S | 38.00 |
| IK (Eureka Aero) | | | (RW) C | 39.00 | | | | |
| | | | K | 30.93 | | | | |
| Los Angeles - San Francisco (LAX - SFO) | | | | | | | | |
| 337 miles | F | 34.70 | F | 35.40 | 49.00 | 55.00 | | |
| TW, UA, CO, RW | (TW)F | 34.80 | (TW) F | 34.80 | | | | |
| NW, BN, PA, WA | (UA)F | 35.40 | (WA) F | 35.00 | | | | |
| | (CO)F | 73.00 | (UA) F | 36.00 | | | | |
| PS (Pacific Southwest) | S | 26.00 | C | 32.00 | | | | |
| OC (Air California) | Y a/ | 49.00 | (RW) C | 35.00 | | | | |
| | FN | 34.70 | Y | 19.00 | | | | |
| | (UA) FN | 35.40 | (BN) Y | 25.95 | | | | |
| | YN | 25.50 | (WA) Y | 53.00 | | | | |
| | (UA) YN | 25.95 | FN | 19.00 | | | | |
| | K | 25.50 | (WA) FN | 35.00 | | | | |
| | (UA) K | 25.95 | YN | 15.00 | | | | |
| | (CO) K c/ | 27.75 | (WA) YN | 28.10 | | | | |
| | (OC) K | 28.20 | (TW) K | 19.00 | | | | |
| | (PS) K | 25.95 | K b/ | 28.10 | | | | |
| | | | (WA) KL | 19.00 | | | | |
| | | | (PS) KL | 20.00 | | | | |
| | | | (UA) K | 30.00 | | | | |
| | | | KN | 20.00 | | | | |
| | | | (PS) K | 32.00 | | | K | 32.00 |
| | | | S | 34.00 | | | | |
| | | | K | 25.00 | | | | |

a/ NW, PA, BN conditional traffic only
b/ WA, UA, RW
c/ Economy class.

[6320-01-M]

APPENDIX B.—*Methodology for Determining Change in Operating Expense Per Available Seat-Mile*

| Year ended June | Trunks | Locals | Trunks plus locals | Total psgr./cargo |
|---|---|---|---|---|
| 1978 | | | | |
| Total Oper. Exp. [1] | $13,721 | $1,935 | $15,644 | $15,978 |
| Less: All-Cargo Exp. [2] | 279 | | 279 | 279 |
| Less: Belly offset [3] | 869 | 142 | 1,001 | 1,054 |
| Less: Non-Sched. [4] | 212 | 50 | 262 | 275 |
| Less: Trans. Related [5] | 380 | 25 | 405 | 409 |
| Psgr. Oper. Expense | $11,981 | $1,718 | $13,687 | $13,961 |
| Sch. Svc. ASM's (000) | 258,266 | 26,167 | 284,433 | 287,465 |
| Oper. Exp./ASM | .04640 | .06566 | .04813 | .04858 |
| 1977 | | | | |
| total Oper. Exp. [1] | 12,112 | 1,647 | 13,759 | 14,051 |
| Less: All-Cargo Exp. [2] | 247 | | 247 | 247 |
| Less: Belly offset [3] | 740 | 99 | 839 | 879 |
| Less: Non-Sched. [4] | 225 | 37 | 262 | 276 |
| Less: Trans. Related [5] | 306 | 25 | 331 | 335 |
| Psgr. Oper. Expense | 10,594 | 1,486 | 12,080 | 12,314 |
| Sch. Svc. ASM's (000) | 243,448 | 24,004 | 267,452 | 270,264 |
| Oper. Exp./ASM | .04352 | .06191 | .04517 | .04557 |
| Percent change in Oper. Exp/ASM | 6.62 | 6.06 | 6.55 | 6.61 |
| Projected change from June, 1977 to March 30, 1979 [6] | | | | 11.85 |

[1] Total operating expenses for all operations and services.
[2] Operations performed in all-cargo services, carrier estimate.
[3] Total cargo revenues (less carrier all-cargo revenue) carried as by-product in aircraft belly compartments (freight, express, mail, ex. baggage).
[4] Total non-scheduled revenues times .95.
[5] Total transported-related expenses, less any excess of expenses over total transport-related revenues.
[6] For fares effective through July 1, 1979, with costs projected through March 30, 1979. Projection factor is 106.61 to the 1.750 power—1.750 log 106.61=1.1185.

Sources: *Air Carrier Financial Statistics, Air Carrier Traffic Statistics.* "C.A.B. Forms 41 and 242".

[FR Doc. 79-4866 Filed 2-14-79; 8:45 am]

---

[6320-01-M]

[Reg. PS-83; Amdt. No. 62; Docket 34684]

## PART 399—STATEMENTS OF GENERAL POLICY

### Implementation of Preemption Provisions of the Airline Deregulation Act of 1978

AGENCY: Civil Aeronautics Board.

ACTION: Final Rule.

SUMMARY: This rule sets interim Board policies for regulation of intrastate routes of airlines with interstate authority. The policies go into effect immediately, but by a notice published in this issue of the FEDERAL REGISTER (PSDR-56) we are inviting comments on them to aid our adoption of final policies. Policies of rate regulation for intrastate routes are the subject of a separate rulemaking also published in this part (PS-82).

DATES: Effective: February 14, 1979; Adopted: February 7, 1979.

FOR FURTHER INFORMATION CONTACT:

John Freeman, Office of the General Counsel, Civil Aeronautics Board, 1825 Connecticut Avenue, NW., Washington, D.C., 20428, (202) 673-5792.

SUPPLEMENTARY INFORMATION: Adopted by the Civil Aeronautics Board at its office in Washington, D.C. February 7, 1979. This rule sets interim Board policies for regulation of intrastate routes of airlines with interstate authority. The policies go into effect immediately, but, by a notice published elsewhere in Part III of this issue of the FEDERAL REGISTER we are inviting comments on them to aid our adoption of final policies. The Board has concluded that it, not the States, is responsible for economic regulations of all the routes, rates or services of any airline holding either a certificate of public conveniences and necessity to provide interstate air transportation or an exemption under section 416 of the act from the requirement for such a certificate. Tentatively included within the types of regulation that are preempted are those governing scheduling, in-flight amenities, bonding, insurance, minimum capitalization and other regulations designed to affect the quality of air service. In occupying the entire field of economic regulations, we recognize that there are some types of state regulation that we may want to consider adopting uniformly for all air carriers, and, until we have considered these regulations carefully, we conclude that the public interest is best served if we adopt the existing state requirements as our own. This aspect of the rule is discussed in more detail below.

The starting point for our analysis is the Airline Deregulation Act of 1978 (ADA) (Pub. L. 95-504) which became effective on October 24, 1978. In broad outline, the ADA sets deadlines and policies for deregulating economic aspects of interstate air transportation, culminating in the sunsetting of the Board's principal domestic rate and route authority. By phasing out economic regulation of airlines, Congress sought to encourage a more competitive and efficient airline industry.

As part of this deregulation effort, Congress enacted a provision (section 4 of Pub. L. 95-504; section 105 of the Federal Aviation Act) specifically preempting State regulation of the rates, routes or services of air carriers having authority under Title IV of the Federal Aviation Act to provide interstate air transportation. Section 105(a) provides:

(1) Except as provided in paragraph (2) of this subsection, no State or political subdivision thereof and no interstate agency or other political agency of two or more States shall enact or enforce any law, rule, regulation, standard, or other provision having the force and effect of law relating to rates, routes, or services of any air carrier having

authority under title IV of this Act to provide interstate air transportation.

(2) Except with respect to air transportation (other than-charter air transportation) provided pursuant to a certificate issued by the Board under section 401 of this Act, the provisions of paragraph (1) of this subsection shall not apply to any transportation by air of persons, property, or mail conducted wholly within the State of Alaska.

Other paragraphs of that section provide that when an intrastate airline receives federal authority, any authority it had received from a State shall be considered to be part of its authority to provide air transportation received from the Board; and that State and local authorities may continue to exercise their proprietary powers and rights as owners or operators of airports served by federally certificated air carriers.

One policy behind section 105 was to prevent State economic regulation from frustrating the benefits of decreased Federal regulation. In the section-by-section analysis of a precursor to the ADA, the House managers of the Bill stated:

* * * with the passage of legislation . . . loosening Federal regulation of airline service and fares, it is possible that some States will enact their own regulatory legislation, imposing utility type regulation on interstate airline service and fares. The [Act] includes a specific statutory provision precluding State interference with interstate service and fares. Section-by-section analysis of H.R. 8813, Cong. Rec., September 23, 1977, H. 10007-8.

Another policy was to avoid the confusion caused under existing law which permitted dual State and Federal regulation of the same carrier. Prior to the ADA, carriers were often subject to dual and conflicting State and federal regulation. The Board granted authority to carry passengers whose journey began in one State and ended in another, and it regulated those passengers' rates. Many States engaged in similar regulation of passengers on intrastate journeys. Since the passenger's ultimate origin and destination was determinative in establishing regulatory jurisdiction,[1] a single flight would frequently carry both interstate and intrastate passengers, regardless of whether the plane itself crossed State boundaries.

Conflicts arose because of differences in State and Federal operating authority and in State and Federal rate regulations. While the State's authority over federal carriers was subject to challenge under traditional doctrines of implicit Federal preemption, in the absence of an explicit Congressional statement, the outcome of this kind of challenge was by no means clear.[2]

The House Report accompanying the Act indicates that the preemption provision was designed to "prevent conflicts and inconsistent regulations . . ." 95th Cong. 2d. Sess. House Report No. 95-1211, p. 16. To remedy the situation Congress concluded that a federal grant of authority to an air carrier to engage in interstate transportation should give the Federal Government the sole responsibility for regulating that carrier. 95th Cong. 2d. Sess. Senate Report No. 95-631, p. 98. Accordingly, the Board now has economic regulatory responsibility for all operations of carriers with Federal authority to the exclusion of the States.

We are aware of some State regulatory actions that contravene section 105. For example, California continues to exert rate jurisdiction over intrastate routes of all federally authorized carriers under compulsion of the State constitution.[3] Some States have required state certification of air taxis registered under Part 298 of the Board's Economic Regulations (14 CFR Part 298). For example, Texas has required federally authorized carriers to obtain certificates of operating authority conditioned on compliance with insurance, liability, bonding and/or capitalization requirements. Some airports have tried to bar new entrants under the guise of exercising proprietary functions, while at the same time permitting existing carriers to expand their operations. At least 27 States claim statutory authority to regulate the economics of air transportation in one form or another.

Because Congress by statute has charged the Board with the responsibility for economic regulation of all of the operations of interstate carriers, and has established a program of deregulation of those operations, we find it important to establish our policies on this matter immediately to avoid unnecessary confusion and overlapping regulation during the transition to an unregulated industry. In the absence of clear predictable policies, the threat of unlawful state regulation may well chill the enthusiasm of carrier management to make competitive route and rate decisions—for example, to enter new markets or adopt innovative pricing policies. This is especially true for small commuter air carriers or wholly new entrants who generally do not have the resources to assert their commercial rights as effectively as large certificated carriers. This could prevent important parts of the industry from achieving the state of competitive efficiency Congress sought. It could also seriously hamper our ability to fulfill our statutory responsibilities under section 102(8) of the Act, *viz*, "The maintenance of a comprehensive and convenient system of continuous scheduled airline service for small communities."

Accordingly, we find good cause why it is in the public interest to adopt these policies on preemption and make them effective immediately on an interim basis. We are interested in receiving public comments in order to aid us in developing final policies.

### WHICH CARRIERS ARE COVERED

*Certificated carriers.* The first question to face is which carriers fall within the scope of section 105 so as to preempt State route, rate and service regulation. The operative language is "air carriers having authority under Title IV of the Act to provide interstate air transportation". There can be no question that this language includes all air carriers holding Federal certificates under Title IV no matter how small a percentage of their total operations that certificate accounts for. Congress specifically rejected a provision that would not have triggered federal preemption until 50 percent of revenues of former intrastate carriers were derived from the carrier's interstate traffic (Section 17 of S. 2493) in favor of the House version triggering preemption upon the receipt of federal authority in any market.[4]

The next question is when preemption of State regulation of a certificated carrier is triggered. Both the plain wording of the Act and sound policy dictate that preemption occurs when the certificate becomes effective. The Act preempts state regulation of carriers *having authority.* It is difficult to read that statutory language in any way except that preemption occurs with the effectiveness of federal authority. This is a sound result because the alternative interpretation—*i.e.*, that preemption occurs only after the carrier begins to operate under federal authority—would create unnecessary uncertainty about the date for trans-

[1] *The People of the State of California, et al.* v. *Civil Aeronautics Board,* 581 F.2d 954, 956 (D.C. Cir. 1978), cert denied, U.S. (1979); *Civil Aeronautics Board* v. *Friedkin Aeronautics,* 246 F.2d 173 (9th Cir. 1957).

[2] *Opinion of the Justices,* 271 N.E. 2d. 354 (Mass. 1971); *Pioneer Airways* v. *City of Kearney,* 199 Neb. 12, 256 N.W. 2d. 324 (1977). *See also, Baltimore Shippers and Receivers Association, Inc.* v. *The Public Utility Commission of California,* 268 F. Supp. 836 (N.D. Cal. 1967), aff'd, 389 U.S. 583 (1968). Compare, *People of California* v. *Western Air Lines,* 42 Cal. 2d. 621, 268 F.2d 723 (1954).

[3] California's decision in this regard is the subject of a challenge by several federally certificated carriers. Civil Action No. C 78-2880 SW, United States District Court, Northern District of California. The United States and the Civil Aeronautics Board have intervened in this suit and have asked for an injunction to prevent the State of California from illegally asserting jurisdiction over federally authorized carriers.

[4] 95 Cong. 2d. Session Senate Report No. 95, p. 171, Cong. Rec. April 19, 1978, p. S. 5910.

fer from state to federal regulation. Moreover, the language of section 105(c) federalizing all authority granted by the state upon *receipt* of authority under Title IV is additional plain language indicating that federalization is triggered when the federal authority becomes effective.

Accordingly, we conclude that federal preemption is triggered as of the date any carrier's federal certificate becomes effective.

*Air taxis.* We also conclude that an air taxi exemption granted under section 416(b) of the Act (49 U.S.C.A. 1386(b)) or Part 298 of the Board's Economic Regulations (14 CFR Part 298) is sufficient to trigger preemption. Beginning with the plain words of the statute, air taxis are exempt from the certification requirement of section 401 based on the Board's power under section 416, and their authority therefore stems from the requirements and provisions of the Title IV. Moreover, in Alaska Congress made it clear that the basis for federal authority in the state of Alaska must be a certificate. Section 105(a)(2). That specific exception would not have been necessary unless, in other states, a federal exemption is sufficient to trigger preemption.

Legislative history of the ADA reinforces the above interpretation. The Senate Bill (S. 2493)[5] specifically triggered preemption for any carrier "certificated or exempted by the Board" under Title IV, and the Conference Committee's selection of even broader House language, "authority under Title IV", includes at least the two forms of authority specifically mentioned in S. 2493. In explaining the Senate provision, Senator Cannon stated that if Part 298 taxis retain their exempt status, federal law would preempt state regulation over them. Cong. Rec., April 19, 1978, S. 5873. Thus, Congress intended that air taxis registered under Part 298 be exempt from state economic regulation.

Accordingly, we conclude that all air taxis registered under Part 298 or other federal air taxis regulations qualify as federal carriers under section 105.[6]

It should be noted that particular carriers may have a choice of federal or state regulation. Under section 401(d)(4), true intrastate carriers with more than 30 seat aircraft can interline with Federal carriers without coming under federal jurisdiction. Those carriers therefore have a choice of operating pursuant to the exception in section 401(d)(4) or registering as a federal air taxi under Part 298. A carrier choosing the former route would not be a federal carrier for preemption purposes unless it were to have some other authority under Title IV.

FEDERAL REGULATION UNDER SECTION 105

Congress has created a scheme of federal regulation of all operations of federally authorized carriers. When a carrier operating under intrastate authority receives federal authority, all of its intrastate authority is to be considered part of the authority to provide air transportation received from the Board. Section 105(c). The Conference Committee in summarizing the Senate Bill indicated that when preemption occurs for a particular carrier (in that Bill, after more than 50 percent of its revenues are derived from interstate operations), *all* of the carrier's operations become subject to Board jurisdiction. 95th Cong. 2d. Sess. Report 95-1770 p. 95. Thus, Congress did not preempt in such a way as to create a regulatory vacuum. It guaranteed newly federalized carriers federal authority that is at the outset coextensive with their state authority, and it intended that the Board would exercise sole and complete economic regulatory jurisdiction over all federal carriers' operations.

It is likely that certain carriers whose operations have thus far been regulated principally by the states will fall entirely under Board jurisdiction by virtue of section 105. In general, we see no basis for distinguishing between carriers that are new to complete federal regulation from those that have been subject to the Board's authority for some time now. It is useful to spell out what the implications of federal regulation are for newly federalized carriers.

*Air taxis.* The adjustment to federal regulation for air taxis should not be difficult. Registration under Part 298 and compliance with the Board's requirements under that Part qualifies a carrier to engage in interstate air transportation with small aircraft in all markets by virtue of an exemption from the certification requirement of section 401(a) (49 U.S.C.A. 1371(a)). See § 298.11(a) of the Board's Economic Regulations (14 CFR 298.11(a)). No tariffs need be filed for such operations except for through joint fares with air carriers or foreign air carriers that are subject to tariff filing requirements (14 CFR § 298.11(b)) and such other requirements as the Board may prescribe by order. Other requirements that apply to air taxis operators (reporting, liability insurance, filing of agreements) are familiar to the registrant and designed to minimize its burden. Accordingly, we do not anticipate that Part 298 operators with substantial intrastate operations formerly regulated by the states will encounter difficulties in coping with the transition to complete federal regulation. All that is necessary is to keep abreast of Part 298 requirements and, in the transition phase, to comply with certain existing state regulations as outlined below.

*Certificated Carriers.* Some large aircraft operators had been operating virtually entirely pursuant to state economic regulatory authority before the ADA, but will come entirely under Board regulation by virtue of federal certification for interstate service. Air Florida, PSA, Air California and Southwest Airlines are examples. As their federal authority becomes effective, those carriers will have to file tariffs with the Board governing their intrastate routes and their intrastate authority will be part of their federally granted authority for purposes of other provisions in the Act, for example sections 401(d)(5) and (7) permitting limited automatic entry and entry into markets where federal authority has been dormant.

Various other Board requirements such as denied boarding rules, nosmoking rules and minimum baggage liability rules will apply with equal force to new and old federal carriers. We are in the process of revamping data reporting rules and newly federalized carriers should be in contact with the Board's Bureau of Carrier Accounts and Audits to facilitate compliance with any reporting or accounting requirements that apply to them. We are also considering minimum insurance requirements under section 401(q) (49 U.S.C.A. 401(q)). It should be emphasized that, while we do not plan to make regulatory distinctions based merely on whether a carrier is a new as opposed to an existing federal carrier, we are prepared to consider temporary relief from the burden of regulations for any carrier or class of carriers when an exemption is consistent with the public interest under section 416(b) (49 U.S.C.A. 1386(b)).[7]

Finally, with respect to rate regulation of newly certificated federal carriers, we will develop policies that will ease the transition to deregulation while preventing exploitation of consumers during that transition. Those policies are the subject of a separate rulemaking.

STATE REGULATION OF AIR CARRIERS

Section 105 forbids state regulation of a federally authorized carrier's

[5] Id.

[6] Section 416(b)(4) provides automatic federal authority for small aircraft operators (less than 56 seats or 18,000 pounds of payload) who comply with Board insurance and liability regulations and such other reasonable requirments as the Board may adopt. Thus far, Part 298 is the Board's only regulation on air taxi authority, so all air taxis operate pursuant to Part 298. We recognize that carriers other than those discussed may acquire limited federal authority, such as by temporary exemption under 416(b), and we will deal with any problems that arise on a case-by-case basis.

[7] Southwest Airlines has filed such a request in Docket 34527.

routes, rates, or services. Clearly, states may not interfere with a federal carrier's decision on how much to charge or which markets to serve. Thus, a state may not establish licensing requirements for federal carriers and may not require carriers to adopt any particular rate or zone of rates. Similarly, a state may not interfere with the services that carriers offer in exchange for their rates and fares. For example, liquidated damages for bumping (denial of boarding), segregation of smoking passengers, minimum liability for loss, damages and delayed baggage, and ancillary charges for headsets, alcoholic beverages, entertainment, and excess baggage would clearly be "service" regulation within the meaning of section 105.

Additionally, we conclude that regulation of capital structure, minimum insurance requirements, bonding, etc. motivated by a desire to protect the quality of service is included with the preemption imposed in section 105. Such regulations necessarily involve a balancing of such considerations as the need to assure carriers' financial integrity and further other goals of consumer protection, and at the same time, to reduce the barriers to entry and encourage competition. Such balancing is essential to the success of deregulation and reliance on the free market, and it is specifically within the Board's province. For states to impose different requirements would interfere with the federal deregulation program both by imposing different priorities than those selected by the Board and by creating confusing multiple regulations of the same subject matter.

Accordingly, we conclude that preemption extends to all of the economic factors that go into the provision of the *quid pro quo* for passenger's fare, including flight frequency and timing, liability limits, reservation and boarding practices, insurance, smoking rules, meal service, entertainment, bonding and corporate financing; and we hereby occupy these fields completely. We recognize however that the transition from state to federal regulation will take time, and that the Board has not yet fully evaluated the need for certain types of regulations that have been imposed by some states. For example, according to a survey by the National Association of State Aviation Officials, 20 States require airlines to have bodily injury and property damage liability insurance. Amounts vary but are generally in the range of $50,000 to $100,000 per seat. Some states (for example, Arizona and Texas) have bonding requirements of up to $100,000. Many states take the carrier's capital structure into account in licensing them for intrastate operations, and Texas specifically requires a minimum of $50,000 capitalization.

The Board will eventually consider the need to adopt uniform regulations on insurance and bonding (see, *e.g.*, section 403(g)). Until we do, we conclude that consumer interests will be served and the transition to Federal regulation will be smoothed if we adopt existing respective state regulations on bonding and minimum liability insurance as our own. Any filings that states require to enforce those regulations should be made with the Special Authorities Division of the Board, Room 915, 1825 Connecticut Avenue, N.W., Washington, D.C. 20428. On the other hand, we view minimum capitalization requirements as attempts to regulate fitness and rates, rather than as consumer protection, and we see no need to inject state requirements on this subject into existing Federal policies of fitness, rate and accounting regulation. We do not here decide what minimum capitalization requirements, if any, the Board would consider in developing Federal fitness concepts.

Finally, we conclude that Congress has not changed the *status quo* with respect to the rights and powers of local governments to take certain actions in their capacity as airport owners and proprietors under case law. See, *City of Burbank* v. *Lockheed Air Terminal, Inc.*, 411 U.S. 624, 635, n. 14 (1973). The full scope of those rights and powers has yet to be developed, but it is clear that the airport proprietor must be acting on its own, not under legislative compulsion, and that its actions must be reasonable, nondiscriminatory, nonburdensome to interstate commerce and reasonably prompt. *British Airways* v. *Port Authority of New York*, 558 F. 2d 75 (2d Cir. 1977); 564 F. 2d 1002 (2d Cir. 1969). As a general rule, States' proprietary rights must be exercised to accomplish legitimate interests in a manner that does not conflict with the provisions and policies of the ADA.

Accordingly, the Civil Aeronautics Board amends Part 399 of its Policy statements (Part 399 of Chapter II, title 14, Code of Federal Regulations) as set forth below.

1. The table of contents is amended to add a new subpart J as follows:

**Subpart J—Policies Relating to Federal Preemption of State Economic Regulation**

Sec.
399.110 State economic regulation of Federally authorized carriers prohibited.
399.111 All operations of Federally authorized carriers to be regulated by the board.

2. A new Subpart J is added to read as follows:

**Subpart J—Policies Relating to Federal Preemption of State Economic Regulations**

**§399.110 State economic regulation of Federally authorized carriers prohibited.**

(a) Section 105 of the Act states, that except as provided in paragraph (b), no State or political subdivision thereof and no interstate agency of two or more States shall enact or enforce any law, rule, regulations, standard, or other provision having the force and effect of law relating to rates, routes, or services of any air carrier having authority under title IV of the Act to provide interstate air transportation.

(b) Except with respect to air transportation (other than charter air transportation) provided pursuant to a certificate issued by the Board under Section 401 of the Act, the provisions of paragraph (a) shall not apply to any transportation by air of persons, property, or mail conducted wholly within the State of Alaska.

(c) Except for air transportation conducted wholly within the State of Alaska, any air carrier holding an effective certificate of public convenience and necessity issued pursuant to section 401 or 418 of the Act, an exemption from those sections pursuant to Part 298 of this chapter, or any other authority under title IV of the Act to provide interstate air transportation qualifies as a federally authorized carrier for purposes of the preemption of State regulation under this subpart.

(d) Examples of regulatory actions preempted under this section include, but are not limited to, tariff filing, certification, regulations governing flight frequency, mode of operation, in-flight amenities, liability, insurance, bonding, and capitalization.

(e) The Board adopts as its own existing State regulations governing insurance and bonding of Federally authorized carriers until the Board has reviewed the need for Federal regulation in those areas. Proof of compliance with state rules, as required by State law, shall be filed with the Special Authorities Division, Civil Aeronautics Board, 1825 Connecticut Avenue NW., Washington, D.C. 20428.

(f) This subpart shall not limit the authority of any State or politicial subdivision thereof or any interstate agency or other political agency of two or more States, as the owner or operator of any airport served by any air carrier certificated by the Board, to exercise its proprietary powers and rights, when such exercise is reasonable, nondiscriminatory, nonburdensome to interstate commerce, and designed to accomplish a legitimate State objective in a manner that does

not conflict with the provisions and policies of the Act.

§399.111 All operations of federally authorized carriers to be regulated by the Board.

(a) All operations of Federally authorized carriers are subject to the requirements of title IV of the Act, including certification and tariff-filing requirements, unless otherwise exempted from one or more of those requirements by Board order or regulation.

(b) When any intrastate air carrier that in August 1, 1977, was operating primarily in intrastate air transportation regulated by a State receives the authority to provide interstate air transportation, any authority received from such State shall be considered to be part of its authority to provide air transportation received from the Board under Title IV of the Act, until suspended, amended, or terminated as provided under such title.

(Sections 102, 105, 204, 401, 403, and 416 of the Federal Aviation Act of 1958, as amended; 72 Stat. 740, ———, 743, 754, 758, 771; 49 U.S.C. 1302, 1305, 1324, 1371, 1373, and 1386.)

By the Civil Aeronautics Board.

PHYLLIS T. KAYLOR,
*Secretary.*

[FR Doc. 79-4867 Filed 2-14-79; 8:45 am]

[6320-01-M]

## CIVIL AERONAUTICS BOARD

[PSDR-56; Docket 34684]

[14 CFR Part 399]

### STATEMENTS OF GENERAL POLICY

**Implementation of Preemption Provisions of the Airline Deregulation Act of 1978**

FEBRUARY 7, 1979.

AGENCY: Civil Aeronautics Board.

ACTION: Proposed rule.

SUMMARY: The Board is issuing, as PS-83 in this part of the FEDERAL REGISTER, a rule setting policy for regulation of intrastate routes of airlines with interstate authority. Although the rule is effective immediately, the Board hereby invites comments on that rule, and will consider revising the rule on the basis of information and arguments submitted by all interested persons.

DATES: Comments by: April 16, 1979. Comments and other relevant information received after this date will be considered by the Board only to the extent practicable.

FOR FURTHER INFORMATION CONTACT:

John Freeman, Office of the General Counsel, Civil Aeronautics Board, 1825 Connecticut Avenue, N.W., Washington, D.C. 20428 (202) 673-5792.

(Secs. 102, 105, 204, 401, 403, and 416 of the Federal Aviation Act of 1958, as amended; 72 Stat. 740, —, 743, 754, 758, 771; 49 U.S.C. 1302, 1305, 1324, 1371, 1373, and 1386).

By the Civil Aeronautics Board.

PHYLLIS T. KAYLOR,
*Secretary.*

[FR Doc. 79-4868 Filed 2-14-79; 8:45 am]

---

[6320-01-M]

[PSDR-55, Docket 34683]

[14 CFR Part 399]

### STATEMENTS OF GENERAL POLICY

**Domestic Intrastate Fare Increases; Request for Comments on Interim Rule**

FEBRUARY 17, 1979.

AGENCY: Civil Aeronautics Board.

ACTION: Request for comments on interim rule.

SUMMARY: The Board has adopted an interim rule, published in this issue of the FEDERAL REGISTER (PS-82), establishing an interim policy for domestic intrastate fare increases. The Board is inviting comments on the interim rule, which is effective immediately, with a view to finalizing Board policy and issuing a revised rule if necessary.

DATES: Comments by: April 16, 1979. Reply comments by: May 7, 1979.

Comments and other relevant information received after these dates will be considered by the Board only to the extent practicable. All filed comments must include a full presentation of all evidence and arguments upon which the commenter wishes to rely in support of his position, or in rebuttal of facts relied upon by the Board. We have decided that all relevant issues can be determined on the basis of written comments, and that oral evidentiary procedures will not be required.

ADDRESSES: Twenty copies of comments should be sent to Docket Section, Civil Aeronautics Board, 1825 Connecticut Avenue, NW., Washington, D.C. 20528. Individuals may submit their views as consumers without filing multiple copies. Comments may be examined in Room 711, Universal Building, 1825 Connecticut Avenue, NW., Washington, D.C., as soon as they are received.

FOR FURTHER INFORMATION CONTACT:

Steven K. McKinney, Trial Attorney, Bureau of Pricing and Domestic Aviation, 202-673-6064, or Mark Kahan, Assistant Chief, Pricing and Entry Division, Office of the General Counsel. 202-673-5205, Civil Aeronautics Board, 1825 Connecticut Avenue, NW., Washington, D.C. 20428.

(Sec. 204, 403, 404, and 1002 of the Federal Aviation Act of 1958, as amended; 72 Stat. 743, 758, 760 and 788, as amended; 49 U.S.C. 1324, 1373, 1374, and 1482; and 5 U.S.C. 553)

By the Civil Aerouautics Board.

PHYLLIS T. KAYLOR,
*Secretary.*

[FR Doc. 79-4869 Filed 2-14-79; 8:45 am]

federal register

THURSDAY, FEBRUARY 15, 1979

PART IV

# SECURITIES AND EXCHANGE COMMISSION

■

## TENDER OFFERS

### Proposed Rules and Schedule

[8010-01-M]

## SECURITIES AND EXCHANGE COMMISSION

[17 CFR Part 240]

[Release Nos. 33-6022; 34-15548; IC-10575; File No. S7-770]

### TENDER OFFERS

#### Proposed Rules and Schedule

AGENCY: Securities and Exchange Commission.

ACTION: Proposed rules and schedule.

SUMMARY: The Commission is withdrawing certain proposed rulemaking published in 1976 and is publishing for comment certain proposed rules and a related schedule which pertain to tender offers. If adopted, these new proposals would implement and augment the present statutory requirements by providing specific filing, delivery and disclosure requirements non-exclusive dissemination provisions and additional substantive regulatory protections with respect to certain tender offers as well as particular antifraud provisions which would apply to any tender offer. These proposals are necessary and appropriate in the public interest and for the protection of investors because of the increased occurrence of tender offers; their impact on securities markets and on corporate control; the dynamic nature of these transactions and the need to ensure a balance between the interests of the person making a tender offer and the management of the company whose securities are being sought while providing disclosure and substantive protections to shareholders making investment decisions in the context of tender offers. The proposals are part of the Commission's ongoing program to replace its emergency rules under the Williams Act with a comprehensive regulatory framework with respect to tender offers.

DATE: Comments must be received on or before March 30, 1979

ADDRESS: Comments should be submitted in triplicate to George A. Fitzsimmons, Secretary, Securities and Exchange Commission, 500 North Capitol Street, Washington, D.C. 20549. Comment letters should refer to File No. S7-770. All comments received will be available for pulbic inspection and copying in the Commission's Public Reference Room, 1100 L Street, NW., Washington, D.C. 20549.

FOR FURTHER INFORMATION CONTACT:

John Huber, Office of the General Counsel (202-755-1280) or John Granda, Division of Corporation Finance (202-755-1750), Securities and Exchange Commission, 500 North Capitol Street, Washington, D.C. 20549.

SUPPLEMENTARY INFORMATION: The Commission today withdrew certain proposals contained in Securities Exchange Release No. 12676 (August 2, 1976) (41 FR 33004) (the "1976 Release") and published for comment new proposed rules and a related schedule and technical amendments to current rules and schedules pursuant to Sections 2, 17 and 19 of the Securities Act of 1933 (the "Securities Act") [15 U.S.C. 77a et seq., as amended by Pub. L. No. 94-29 (June 24, 1975)] and Sections 3(b), 10(b), 13(d), 14(d), 14(e) and 23(a) of the Securities Exchange Act of 1934 (the "Exchange Act") [15 U.S.C. 78a et seq. as amended by Pub. L. No. 94-29 (June 24, 1975)] with respect to tender offers. If adopted, these proposals would implement and augment the present statutory requirements by providing specific filing and disclosure requirements, dissemination provisions, and additional substantive protections with respect to certain tender offers as well as particular antifraud provisions applicable to any tender offer.

These proposals are not applicable to presently pending tender offers or to any tender offer commenced prior to the actual adoption and effectiveness of the proposals contained herein. Recognizing the need for permanent rulemaking in this important area, the Commission will endeavor to expedite, to the extent feasible, the rulemaking process and presently anticipates final rulemaking action on these proposals by June 30, 1979. The proposals are based in part on the record in the Commission's Public Fact Finding Investigation in the Matter of Beneficial Ownership, Takeovers and Acquisitions by Foreign and Domestic Persons ("Tender Offer Hearings"),[1] The 1976 Release, the 111 comment letters received in response to the 1976 Release, judicial decisions and the Commission's experience.

The Commission's primary mandate under the federal securities laws is to protect investors and to act in the public interest. In the context of tender offers, the Commission is empowered to require full and fair disclosure for the benefit of investors and to permit both the person making the tender offer (the "bidder") and the management of the company whose securities are being sought (the "subject company") an equal opportunity to fairly present their positions. The Commission is mindful that any effort to benefit investors in this area should seek to avoid tipping the balance of regulation in favor of either the bidder or the subject company. Accordingly, the Commission has re-examined the present regulatory framework, revised certain of the proposals contained in the 1976 Release,[2] included other proposals and is publishing the proposals set forth in this release for comment.

The proposals include a definitional framework which will clarify the meaning of terms frequently used in proposed Regulations 14D and 14E and will provide a definition of the term "commencement" of a tender offer, which is essentially equivalent to the date a tender offer is first published, sent or given to security holders.

With respect to Schedule 14D-1 which was adopted in 1977,[3] the proposals would establish a system of filings of such schedules and amendments thereto with the Commission and deliveries to certain interested persons which would be predicated on the date of commencement of a tender offer and would not require an initial filing with the Commission prior to the date the tender offer is first published, sent or given to security holders. Rather than establish a specific time for such filings, the proposal generally permits a filing to be made as soon as practicable on the date of commencement or, with respect to amendments, on the date the material change or additional tender offer material is first published, sent or given to security holders. This filing standard is designed to create an efficient system in conformity with the Williams Act which will not unduly burden bidders. In addition, the proposals which would provide for the prompt communication of information regarding tender offers to trading markets are intended to assist national securities exchange and the National Association of Securities Dealers, Inc. (the "NASD") in carrying out their responsibilities of self regulation under the federal securities laws.

In addition to establishing comprehensive disclosure requirements applicable to any tender offer subject to Section 14(d) of the Exchange Act, the proposals would also provide a framework for disseminating cash tender offers and amendments thereto to security holders. These proposals would add content and clarity to the term "published, sent or given" to security holders and are intended to afford a greater number of shareholders the opportunity to receive, consider and

[1] Securities Act Release Nos. 5529 (September 9, 1974) (39 FR 33935) and 5538 (November 5, 1974) (39 FR 41223).

[2] While certain of the proposals contained herein and which were included in the 1976 Release could have been adopted without re-publication for comment, the Commission chose not to do so. See discussion of Development of Rulemaking Proposals, below.

[3] Release No. 34-13787 (July 21, 1977) (42 FR 38341) (the "1977 Release").

evaluate the disclosure required by other proposals. Three non-exclusive, non-mandatory methods of disseminating cash tender offers would be provided: long-form publication; summary publication; and the use of stockholder lists and security position listings ("stockholder lists"). To ensure the efficient operation of the stockholder list method, a procedure would be established under which the bidder's tender offer materials would be mailed/transmitted to security holders either by the bidder who is furnished with such lists or by the subject company which would conduct the mailing/transmittal pursuant to such lists. The choice as to the method used would be at the option of the subject company. The bidder would be solely responsible for the disclosure disseminated by the use of stockholder lists and for the expenses incurred by the subject company in complying thereunder. The option to the subject company embodied in the stockholder list proposal is in contrast with the comparable proposal in the 1976 Release which envisioned direct access to such lists by the bidder.

To further ensure that investors have an adequate opportunity to consider communications from the bidder as well as the subject company in deciding whether to tender to the bidder, sell into the market or hold part or all of their securities, the Commission is also proposing rules that would: require all tender offers to remain open for at least 30 business days and for at least ten business days after any increase by the bidder in the offered consideration; provide withdrawal rights for shares deposited by investors during the first fifteen business days of an offer and an additional 10 business days in the event of a competing offer; and permit bidders to extend pro rata acceptence rights for periods in excess of those required by Section 14(d)(6).

In order to prevent circumvention of the remedial purposes of the "best price rule" embodied in Section 14(d)(7) of the Exchange Act, certain purchases by a bidder or its affiliates during a forty business day period following the bidder's tender offer would be integrated with purchases made during the tender offer solely for purposes of that Section.

The Commission is also proposing other provisions which would require: prompt status reports whenever the length of a tender offer is extended; and payment for or return of deposited securities as soon as reasonably practicable after the tender offer's termination.

The Commission has also re-examined the present disclosure requirements relating to subject companies and other persons making a solicitation or recommendation in connection with a tender offer subject to Section 14(d) and is now proposing a rule and a new Schedule 14D-10 [17 CFR 240.14d-101] which would replace current Rule 14d-4 [17 CFR 240.14d-4] and Schedule 14D [17 CFR 240.14d-101], respectively. While expanded disclosure would be required by the proposed schedule, the persons required to file with the Commission, deliver to certain interested persons and disseminate the expanded disclosure to security holders would be more limited than under the current rule. The limitation on the types of persons who must file a proposed Schedule 14D-10 represents an effort by the Commission to avoid unnecessary regulation in the context of tender offers. It should be noted, however, that while a person's communication may not be within the purview of the proposed rule, it would be subject to Section 14(e) of the Exchange Act.

Finally, the Commission is proposing a rule which is designed to curb a serious abuse in tender offer practice by certain persons trading in subject company securities prior to the bidder's announcement of an intention to make a tender offer. Any person who knows or has reason to believe on the basis of non-public information received directly or indirectly from a bidder that the bidder will make a tender offer would be required to make a public announcement of such information and its source before purchasing any subject company security or option to purchase such a security.

In order to facilitate the public comment process, this release contains: a brief discussion of the provisions and legislative history of the Williams Act with respect to tender offers; background information concerning the administrative development of the proposals contained herein; a synopsis of the proposals, which includes an overview of their application and operation; and additional requests for public comment with respect to certain specific and general items of inquiry. While the synopsis is intended to assist in a better understanding of the proposals, attention is directed to the proposals themselves for a more complete understanding of the proposals.

## I. Statutory Background

The Williams Act Amendments to the Exchange Act provided for federal regulation of tender offers. Section 14(d) provides filing and disclosure requirements as well as substantive regulatory protections for certain tender offers.[4] The broad antifraud provisions of Section 14(e) are applicable to any tender offer.

Generally, Section 14(d) makes it unlawful for any person (or group of persons) to make a tender offer for or request or invitation for tenders of such securities which, if successful, would result in that person being the direct or indirect beneficial owner of more than 5 percent of a class of certain equity securities unless that person, at the time of publication or distribution of the tender offer, has filed with the Commission a statement disclosing the information specified in Section 13(d) as well as such other information required by the Commission's rules. Among other things, Section 14(d) also contains regulatory provisions relating to shareholders' withdrawal rights and their pro rata acceptance rights, as well as the bidder's obligation to treat all tendering shareholders equally with respect to any increase in the offered consideration. Section 14(d)4 requires that all offers be made in accordance with rules adopted by the Commission. Section 14(e) which is applicable to all tender offers and recommendations related thereto, makes it unlawful for any person to make any untrue statement of a material fact or to omit to state any necessary fact or to engage in any fradulent, deceptive or manipulative acts or practices in connection with any actual or planned tender offer.

In passing the Williams Act, Pub. L. 90-439, in 1968, Congress recognized that although "takeover bids should not be discouraged,"[5] regulation of tender offers was necessary for the purposes of disclosure of material information and substantive protection to investors.[6] The approach was considered necessary because:

> The competence and integrity of a company's mangement and of those persons who seek management positions, are of vital importance to stockholders. Secrecy in this area is inconsistent with the expectations of the people who invest in the securities of publicly held corporations and impair public confidence in securities as a medium of investment.[7]

Congress also heard testimony about the need to provide adequate communication with the shareholders and to insure sufficient time to make an investment decision in order to avoid undue pressure on shareholders during a tender offer.[8]

---

[4] Section 14(d) of the Exchange Act is applicable to classes of equity securities which are registered pursuant to Section 12 of the Exchange act, or which would have been required to be registered pursuant to that Section except for a specific statutory exemption for insurance companies or which have been issued by a closed-end investment company registered under the Investment Company Act of 1940.

[5] S. Rept. No. 550, 90th Cong., 1st Sess. 3 (1967) ("1967 Senate Report").

[6] Id. at 1.

[7] Id. at 2.

[8] See generally, testimony of Hon. Manuel F. Cohen, Chairman SEC, Hearings on S.

Footnotes continued on next page

However, in adopting this approach Congress was aware of the positions of the bidder and the company whose securities are being sought in a tender offer[9] and therefore took:

"* * * extreme care to avoid tipping the balance of regulation either in favor of management or in favor of the person making the takeover bid. The bill is designed to require full and fair disclosure for the benefit of investors while at the same time providing the offeror and management equal opportunity to fairly present their case.[10]

In light of the legislative history and the language of the Williams Act, the Commission is mindful that its primary objective is "to provide investor protection in takeover situations rather than to regulate tender offers as an 'economic phenomenon.'"[11] The Commission has therefore attempted to administer the Williams Act in an evenhanded way which neither obstructs nor facilitates tender offers except to the extent necessary to accomplish the purpose of investor protection.[12]

## II. Development of Rulemaking Proposals.

In order to implement the statutory framework for the Williams Act, the commission adopted emergency rules and regulations[13] immediately after the legislation became law. Subsequent to enactment of the Williams Act amendments in 1970[14] which provided additional investor protection in the context of tender offers, the Commission made further amendments to its rules.[15]

The examination of the operation of the emergency rules and the need for further rulemaking began with the Commission's Tender Offer Hearings in November and December, 1974. The written and oral testimony of witnesses and the letters of comment from interested persons highlighted certain issues. These included: the definition of the term "tender offer"; the disclosure pertaining to tender offers; the dissemination of information to security holders; the need of security holders to have adequate time to evaluate the disclosure and to make investment decisions with respect to tender offers; and the effectiveness of withdrawal requirements. The Tender Offer Hearings also demonstrated the need for a permanent regulatory framework with respect to tender offers which would replace the emergency rules and disclosure schedules.

On the basis of the Tender Offer Hearings, Congressional hearings,[16] judicial decisions and the Commission's administrative experience, the tender offer rule proposals were published for comment in August, 1976 (the "1976 proposals" or the "former proposals").[17] The 1976 proposals were intended to implement and augment the statutory requirements of the Williams Act by providing specific disclosure and dissemination requirements, additional substantive regulatory protections, particular antifraud provisions and other regulations with respect to tender offers.

A brief review of the provisions of the 1976 proposals may be of assistance to an understanding of the revised tender offer proposals now published for comment. Former proposed Rule 14d-1 provided for definitions of terms frequently used in the 1976 proposals.

Under former proposed Rule 14d-2, a bidder making a tender offer subject to Section 14(d)(1) of the Act was required to take certain actions prior to or simultaneously with the time the tender offer was first published, sent or given to security holders. In addition to a filing with the Commission and a transmittal to the subject company, the bidder was required under certain conditions to transmit a copy of proposed Schedule 14D-1 to national securities exchanges and to the National Association of Securities Dealers, Inc. ("NASD"). Former proposed Rule 14d-2 also addressed the filing and transmittal requirements for additional soliciting material and material changes to the disclosure in proposed Schedule 14D-1.

Former proposed Rule 14d-3 pertained to the methods of disseminating the information contained in cash tender offers subject to Section 14(d)(1) of the Act. While not intended to be either mandatory of exclusive, the former proposal covered three alternative methods of communicating these cash tender offers: long form publication; summary publication; and the use of stockholder lists to assist direct communication of tender offer materials to security holders. The use of stockholder lists was designed to complement the operation of former proposed Rule 14e-1, discussed below.

Regulation of solicitations and recommendations to security holders to accept or reject a tender offer subject to Section 14(d)(1) of the Act which are made by certain persons, not including bidders, was the subject of former proposed Rule 14d-4. Former proposed Schedule 14D-4 would have been required to be filed with the Commission and mailed to the bidder and, under certain conditions, to national securities and exchanges to the NASD prior to or simultaneously with the time that the solicitation or recommendation was first made to security holders. Material changes to the information in the former proposed Schedule 14D-4 were required to be promptly filed and transmitted in a similar manner. Additionally, minimum information requirements were provided for the solicitation or recommendation communicated to security holders. Among the exceptions contained in the former proposal was an exemption for a subject company's "stop-look-and-listen" letter to its security holders.

Former proposed Rule 14d-5 was designed to establish additional withdrawal rights for security holders. In addition to an initial withdrawal period of ten business days, the former proposal provided for withdrawal of any or all securities which were deposited but not accepted for payment by a bidder for a period of seven business days following the filing date of a proposed Schedule 14D-1 relating to a competing tender offer by a subsequent bidder.

Under former proposed Rule 14d-6, open market, private or other purchases by a bidder or its affiliates within forty business days after termination of the tender offer were integrated with the tender offer for purposes of Section 14(d) of the Act. Unless an exemption were available, the former proposal would, in most circumstances, have precluded these

---

Footnotes continued from last page

510 Before the Subcomm. on Securities of the Senate Comm. on Banking and Currency, 90th Cong., 1st Sess. (1967) [the "1967 Senate Hearings"].

[9] In introducing S. 510 Senator Williams stated:

This measure is not aimed at obstructing legitimate takeover bids. In some instances, a change in management will prove a welcome boon for shareholder and employee, and in a few severe situations it may be necessary if the company is to survive.

Cong. Rec. S443-444 (daily ed. January 18, 1967) (remarks of Senator Williams).

I have taken extreme care with this legislation to balance the scales to protect the legitimate interests of the corporation, management, and shareholders without unduly impeding cash takeover bids.

Id. at S 444.

This evenhandness is in contrast to the impetus of an earlier bill (S. 2731, 89th Cong., 1st Sess. (1965), also introduced by Senator Williams, which would have required disclosure by a bidder in advance of a tender offer. see 111 Cong. Rec. 28257, 28258 (1965) (remarks of Senator Williams).

[10] 1967 Senate Report at 3.

[11] Testimony of Philip A. Loomis, Commissioner, SEC, Hearings on Regulation Under Federal Banking and Securities Laws of Persons Involved in Corporate Takeovers, Before the Senate Comm. on Banking, Housing and Urban Affairs, 94th Cong., 2nd Sess. 87 (1976).

[12] *Id.*

[13] Exchange Act Release No. 8370 (July 30, 1968) (33 FR 11015) amended by Exchange Act Release No. 8392 (August 30, 1968) (33 FR 13036). See also exchange Act Release No. 8556 (March 24, 1969) (34 FR 6101).

[14] Pub. L. 91-567 December 22, 1970.

[15] Exchange Act Release No. 9060 (January 18, 1971) (36 FR 976).

[16] See, e.g., 1976 Senate Hearings.

[17] Release No. 34-12676 (August 6, 1976) (41 FR 33004).

purchases during the forty business day period.

While former proposed Rule 14d-7 exempted certain communications from Regulation 14D, former proposed Rule 14d-8 established an exemption from Section 14(d)(6) of the Act for tender offers made for less than all the outstanding equity securities of a class in which the bidder provided that any and all securities taken up at any time pursuant to the tender offer would be accepted on a pro rata basis.

Former proposed Rule 14e-1 would have regulated the transmission by the subject company and the use by the bidder of shareholder and other lists in certain tender offers. Specifically, the former proposal provided that failure of a subject company with a class of equity securities referred to in Section 14(d)(1) of the Exchange Act to furnish the most recent shareholder list and clearing agency security position listing in the subject company's possession or under its control within two business days after receipt of a written request, meeting certain requirements, from a bidder constituted a fraudulent, deceptive or manipulative act or practice under Section 14(e) of the Act.

Former proposed Rule 14e-2 set forth specific anti-fraud provisions which pertained to any tender offer. These included requirements that: any tender offer remain open at least fifteen business days from the date it is first published, sent or given to security holders; any tender offer remain open at least ten business days after the date of notice of an increase in either the offered consideration or the dealer's soliciting fee; the bidder pay the offered consideration or return stock certificates deposited by or on behalf of security holders within ten business days after termination of a tender offer; and whenever the length of a tender offer is extended beyond the scheduled expiration date, the bidder issue a press release or similar public announcement containing certain information within one business day after the scheduled expiration date.

In response to the 1976 Release, 111 letters [15] were submitted by the following categories of commentators:

| | |
|---|---|
| Corporations | 54 |
| Law firms and associations | 24 |
| Securities industry | 8 |
| Trade organizations and associations | 6 |
| Academicians | 2 |
| State administrative agencies | 2 |
| Other interested persons | 5 |

The diverse views expressed by the various commentators were informative and assisted the Commission in revising the 1976 proposals and in formulating the additional proposals published herein.

Since the publication of the 1976 proposals, judicial [19] and legislative [20] developments have occurred in the tender offer area. Also, in July 1977, the Commission adopted a permanent Tender Offer Statement on Schedule 14D-1 [§ 240.14D-100] which sets forth the disclosure requirements for persons making certain tender offers and amended present Rule 14d-1 [§ 240.14d-1] to implement the filing of the schedule with the Commission and to specify the disclosure items contained in the schedule which are to be included or summarized in the information published, sent or given to security holders in connection with these tender offers.[21] The adoption of Schedule 14D-1, which was based on the 1976 proposed schedule, represented the first step by the Commission in establishing a comprehensive regulatory framework specifically designed for tender offers. The release which announced the adoption of Schedule 14D-1 and the amendment to present Rule 14d-1 stated that the Commission anticipated further rulemaking action upon the completion of the revisions to the 1976 proposals.[22]

In addition to the adoption of Schedule 14D-1, the Commission has published for comment proposed Rule 13e-4 [§ 240.13e-4] and related Schedule 13E-4 [§ 240.13d-101] which concern regulation of issuer tender offers [23] and has also participated amicus curiae in litigation involving the validity of state takeover legislation.[24]

In April 1978, the Commission authorized the issuance of an interpretative release reflecting the view of the Division of Corporation Finance with respect to certain issues arising under the Williams Act.[25] In a related area, the Division of Corporation Finance recently published instructions to its staff with respect to disclosure of anti-takeover proposals such as charter and bylaw amendments contained in proxy and information statements and other filing with the Commission.[26]

During the course of these legislative, judicial and administrative developments, the 1976 tender offer proposals were being revised. Although certain of the revised proposals published herein could be adopted under the Administrative Procedure Act [5 U.S.C. 551 et seq.] without further public comment, the Commission believes

[15] See File No. S7-649. For the convenience of the public, a copy of the summary of these comment letters, which was prepared by the staff of the Commission, has been placed in the public file.

[19] See, e.g., "Piper v. Chris-Craft Industries, Inc.," 430 U.S. 1 (1977); "Kennecott Copper v. Curtiss-Wright Corporation," CCH Fed. Sec. L. Rep. [Current Binder] ¶ 96, 565 (2d Cir. Sept. 28, 1978); "Great Western United Corp. v. Kidwell," 577 F. 2d 1256 (5th Cir. Aug. 10, 1978) prob. juris. noted, —— U.S. ——, 47 U.S.L.W. 3450 (U.S. Jan. 8, 1979); "Humana Inc. v. American Medicorp, Inc.," CCH Fed. Sec. L. Rep. ¶ 96,286 (S.D.N.Y. 1978); and "S-G Industries v. The Fuqua Investment Co.", Civ. Act. No. 78-2392-5 (D. Mass December 19, 1978).

[20] Section 7A of the Clayton Act, 15 U.S.C. 18(a) as added by Sections 201 and 202 of the Hart-Scott-Rodino Antitrust Improvements Act of 1976, Pub. L. 94-435, requires among other things that persons contemplating certain mergers or acquisitions of securities (including exchange and cash tender offers) give the Federal Trade Commission and the Assistant Attorney General in charge of the Antitrust Division of the Department of Justice advance notice and to wait certain designated periods before consummation of such plans. The sponsors of this legislation recognized its relationship to the Williams Act and were sensitive to the problems engendered by undue delay in the commencement and completion of otherwise valid tender offers. In enacting the Antitrust Improvements Act, Congress reaffirmed its intention in passing the Williams Act by stating:

> In the case of such tender offers, more so than in other mergers, the equities include time and the danger of undue delay. This bill in no way intends to repeal or reverse the congressional purpose underlying the 1968 Williams Act, or the 1970 amendments to that Act.

122 Cong. Rec. 10293 (1976) ("Appropriate Legislative Intention" by Rep. Rodino). Final rules implementing title II of the Antitrust Improvements Act were promulgated by the Federal Trade Commission in 1978. 43 FR 33450 (July 31, 1978) as corrected by 43 FR 34443 (August 4, 1978).

[21] Release No. 34-13787 (July 21, 1977) (43 FR 33004) (the "1977 Release").

[22] *Id.*

[23] Release No. 34-14234 (December 8, 1977) (42 FR 63066).

[24] Brief of the Securities and Exchange Commission as Amicus Cruiae, "Great Western United Corporation v. Kidwell," 577 F. 2d 1256 (5th Cir. Aug. 10, 1978), prob. juris. noted —— U.S. ——, 47 U.S.L.W. 3450 (U.S. Jan. 8, 1979).

[25] Release No. 34-14699 (April 28, 1978) (43 FR 18163). The issues considered by this interpretative release were: (1) whether disclosure by a bidder in certain cash tender offers about previous negotiations or agreements for a merger and/or future intentions to merge with the subject company involves "gun jumping" and thus violates Section 5 of the Securities Act of 1933; and (2) whether the cash option features of certain statutory mergers involve a tender offer by the acquiring company. With respect to the first issue, the Division of Corporation Finance withdrew a position taken in a previous letter and expressed its view in the interpretative release that disclosure by a bidder in a tender offer required by the Williams Act about previous negotiations or agreements with the subject company regarding a merger or future intentions to merge with the subject company does not involve "gun jumping." With respect to the second issue, the Division of Corporation Finance expressed the view in the interpretative release that, while the issue is not free from doubt, the Division will not suggest a Williams Act filing on Schedule 14D-1 in connection with certain statutory mergers involving a cash option feature. Id.

[26] Release No. 34-15230 (October 13, 1978) (43 FR 49863).

that, while not required, republication of these revisions is appropriate in this instance. This position is predicated, in part, on the following factors: (1) the intervening legislative and judicial developments since the publication of the 1976 proposals; (2) the interrelationship between the revised proposals and those not previously published for comment in terms of their operation and the purposes of the Williams Act; and (3) the Commission's belief that, because of the importance and interrelationship of the proposed permanent rulemaking, interested persons should be able to comment, to the extent feasible, on the entire proposed regulation of tender offers.

Because of the relationship of the 1976 proposals to those published herein and for the convenience of interested persons, a table setting forth the two sets of proposals is being furnished. The table consists of four columns: (1) the proposed rule or schedule published in this release; (2) the title of the proposed rule or schedule published in this release; (3) the 1976 proposed rule or schedule to which the proposal published herein corresponds or on which it is based in whole or in part; and (4) the corresponding existing rule, if any. The table is as follows:

| | Title | Former proposal | Existing rule |
|---|---|---|---|
| Proposal: | | | |
| 14d-1 | Definitions | 14d-1 | |
| 14d-2 | Filing and delivery of tender offer statement | 14d-2 | 14d-1 |
| 14d-3 | Disclosure requirements with respect to tender offers. | 14d-3 | 14d-1 |
| 14d-4 | Dissemination of certain cash tender offers | 14d-3 | |
| 14d-5 | Dissemination of certain tender offers by the use of stockholder and other lists. | 14e-1 | |
| 14d-6 | Date of commencement of a tender offer | 14d-3 | |
| 14d-7 | Additional withdrawal rights | 14d-5 | |
| 14d-8 | Purchases after termination of certain tender offers. | 14d-6 | |
| 14d-9 | Exemption from statutory pro rata requirement | 14d-8 | |
| 14d-10 | Solicitation/Recommendation Statements with respect to certain tender offers. | 14d-4 | 14d-4 |
| Schedule: | | | |
| 14d-10 | Solicitation/Recommendation Statement | Schedule 14D-4. | Schedule 14D |
| 14e-1 | Unlawful tender offer practices | 14d-2 | |
| 14e-2 | Trading in subject company securities prior to the bidder's public announcement of the intention to make a tender offer. | | |

In light of the foregoing, the Commission is withdrawing the remaining 1976 tender offer proposals which have not previously been adopted. While the proposals published herein are not applicable to presently pending tender offers or to any tender offer which is commenced prior to the actual adoption and effectiveness of the proposals contained herein, the Commission recognizes that prompt rulemaking action is necssary and appropriate. Therefore, the Commission has tentatively established the following timetable: (1) the public comment period on these proposals will be open until March 30, 1979; (2) the prompt revision of the proposals, if necessary, in light of the comment letters received; (3) adoption of the proposals, as revised, is anticipated by June 30, 1979; and (4) effectiveness of the adopted proposals is anticipated by July 31, 1979.

### DEFINITION OF THE TERM "TENDER OFFER"

In recognition of the dynamic nature of tender offers and the need for the Williams Act to be interpreted flexibly in a manner consistent with its purposes, the Commission affirms its position that a definition of the term "tender offer" is neither appropriate nor necessary at this time. The Commission wishes to emphasize that in its view the term should be understood in a contest which furthers the purposes of the Williams Act. Thus, this position should in a no way be construed to mean that the term applies only to a so-called "conventional" tender offer.

In this regard, the Commission wishes to reiterate that the purposes of Sections 14(d) and 14(e) of the Williams Act include ensuring that meaningful information is provided to investors before they are required to make an investment decision in response to an offer, request or invitation to tender and ensuring that such decisions may be made in an atmosphere which provides sufficient time to recieve and evaluate the information presented, any view concerning the offer provided by the subject company and any competing offer for securities of the same class of securities being sought.

In the Commission's view, the term "tender offer" is to be interpreted flexibly in accordance with the intended purposes of Sections 14(d) and 14(e) of the Williams Act. Therefore, the determination of whether a transaction or series of transactions constitutes a tender offer depends upon consideration of the particular facts and circumstances in light of such purposes.

## III. SYNOPSIS

### A. OVERVIEW OF APPLICATION AND OPERATION OF PROPOSED RULES AND SCHEDULE

The proposed rules are grouped into two proposed regulations, Regulations 14D and 14E, the application of which depends on whether the tender offer is subject to Section 14(d) of the Exchange Act or not. If the tender offer is for securities of a classs of securities referred to in Section 14(d)(1), both of the proposed Regulations would apply. If the tender offer is not subject to that sub-section, only proposed Regulation 14E would apply. The following discussion pertains only to a tender offer in which both of the proposed Regulations would be applicable.

The proposals which regulate the bidder may be divided into four categories: filing requirements; dissemination provisions; disclosure requirements; and substantive provisions. Before discussing these categories, it should be noted that the operation of these proposals is triggered by the date of commencement of the tender offer, which as defined by proposed Rule 14d-6 is essentially equivalent to the date the offer is first published, sent or given to security holders.

The filing requirements are set forth in proposed Rule 14d-2 and would govern the filing of the bidder's Schedule 14D-1 and amendments thereto with the Commission. Moreover, a bidder would be required to make hand delivery of the initial filing and amendments thereto to the subject company, and under certain conditions to national securities exchanges and to the NASD. A competing bidder would also be required to hand deliver the initial filing to any previous bidder whose tender offer for the same class of securities had not yet expired.

Proposed Rule 14d-4 would establish three non-mandatory, non-exclusive methods of disseminating a cash tender offer to security holders: long-form publication, summary publication, and the use of shareholder lists and security position listings ("stockholder lists"). The dissemination process envisioned by each of these methods includes the initial solicitation, and additional soliciting materials published, sent or given to security

holders during the tender offer. Since these methods are non-exclusive, a cash tender offer may be published, sent or given to security holders by other means. The dissemination of an exchange tender offer is governed by the provisions of the Securities Act of 1933 if the transaction is subject to the registration requirements of that Act.

The use of the stockholder lists method is facilitated by proposed Rule 14d-5 which would enable a bidder to disseminate its tender offer materials in a manner substantially similar to that under present Rule 14a-7 [17 CFR 240.14d-7], which relates to proxy contests. The tender offer materials would be disseminated to security holders pursuant to the stockholder lists. The subject company would determine whether to retain the stockholder lists, in which case the subject company would disseminate the bidder's tender offer materials, or to furnish the stockholder lists to the bidder, in which case the bidder would disseminate the tender offer materials.

While the dissemination provisions of proposed Rule 14d-4 would apply only to cash tender offers and would not be mandatory, the disclosure requirements of proposed Rule 14d-3 would apply to any tender offer subject to Section 14(d) and would impose disclosure obligations on the bidder with respect to the initial solicitation and additional tender offer materials published, sent or given to security holders during the tender offer. The specific disclosure requirements of this proposal would generally depend on whether a summary advertisement of the tender offer is used in the dissemination process. Summary advertisements would be permitted only with respect to summary publication and stockholder lists. If either of these methods is used, the disclosure requirements of proposed Rule 14d-3(b)(2) apply. Other tender offers, such as cash tender offers which are published by means of long-form publication, exchange offers or unconventional tender offers, would be subject only to the requirements of proposed Rule 14d-3(b)(1).

With respect to cash tender offers, proposed Rules 14d-3, 14d-4 and 14d-5 are designed to operate in concert. This interrelationship is demonstrated by the brief description of the chronological operation of a cash tender offer by the use of stockholder lists, which follows: (1) the bidder would request the use of the stockholder lists pursuant to Rule 14d-5(a); (2) the subject company would make its election either to disseminate the tender offer materials or to furnish the stockholder lists; (3) if the subject company conducts the dissemination, proposed rule 14d-5(b) would govern the subject company's conduct and proposed Rule 14d-4(a)(3)(i) would apply to the bidder; (4) if the subject company furnishes the stockholder lists to the bidder, proposed Rule 14d-5(c) would apply to the subject company and proposed Rule 14d-4(a)(3)(ii) would prescribe the method by which the bidder would disseminate its tender offer materials; (5) under either Item 3 or 4, at the approximate beginning of the dissemination process the bidder would be required to publish a summary advertisement which would determine the date of commencement of the bidder's tender offer and which would be limited to the information described in proposed Rule 14d-3(b)(2); (6) under either Item 3 or 4, the bidder's tender offer materials would contain the disclosure required by proposed Rule 14d-3(b)(1); and (7) a similar sequence would be followed with respect to material changes in the bidder's tender offer materials.

The substantive provisions with respect to a tender offer are set forth in proposed Rules 14e-1, 14d-7, 14d-9 and 14d-8. Proposed Rule 14e-1 would regulate the length of a tender offer. Any tender offer would be required to remain open for thirty business days from the date of commencement and for ten business days from the date of a notice of increase in the offered consideration or the dealer's soliciting fee. These time periods are desinged to operate concurrently. Thus, if a tender offer commences on business day 1 and the bidder increases the consideration on business day 19, the ten business day period will expire during the minimum thirty business day period.

Two proposals would regulate the terms under which the tender offer would be conducted. The additional withdrawal rights provided by proposed Rule 14d-7 would operate independently of the time period requirements of proposed Rule 14e-1. Under proposed Rule 14d-7, an initial withdrawal period of 15 business days would be provided and, if a competing offer is made, an additional ten day withdrawal period would be required under certain conditions. As with the time periods of proposed Rule 14e-1, the additional withdrawal right time periods would be computed concurrently, rather than consecutively. Proposed Rule 14d-9 would enable a bidder to vary either or both of the pro rata acceptances provisions of Section 14(d)(6) on the condition that (1) the minimun ten day periods under the statute are provided; and (2) the bidder's tender offer materials disseminated on the date of commencement of the offer disclose the different pro rata time periods. The proposal is intended to be voluntarily in operation.

Two proposals would regulate the bidder's conduct after the termination of the tender offer. Proposed Rule 14e-1(c) would require payment for or the return of the deposited securities to security holders as soon as reasonably practicable after the termination of the tender offer. Proposed Rule 14d-8 would integrate with the tender offer for the purposes of Section 14(d)(7) certain purchases of subject company securities by the bidder or its affiliates which occur during the forty business day period following the date the tender offer terminated. Such purchases would be deemed to have occurred prior to the expiration of the tender offer for purposes of the "Best Price Rule."

The subject company would be specifically regulated by two proposals. If a bidder determined to use the subject company's stockholder list, the subject company would be required to comply with the applicable provisions of proposed Rule 14d-5. If the subject company made a solicitation or recommendation to security holders with respect to the tender offer, proposed Rule 14d-10 would require the filing and delivery of the proposed Schedule 14D-10 to the Commission and certain designated persons as soon as practicable on the date the solicitation/recommendation is first published, sent or given to security holders. The disclosure in the solicitation-recommendation disseminated to security holders by the subject company would be required to contain certain information, based on the provisions of proposed Schedule 14D-10. Material changes to that schedule would be filed, delivered and disseminated in a similar manner.

Two proposals would pertain to persons other than the subject company. Proposed Rule 14d-10, described above, would pertain to the solicitations/recommendations of certain specified persons with respect to the tender offer. Generally, persons who are related to the subject company or the bidder because of employment, membership on the board of directors or shareholder or affiliate status would be included in the persons required to comply with the proposal. To avoid unnecessary regulation, the proposal would not include every solicitation/recommendation made with respect to a tender offer subject to Section 14(d). It should be noted, however, that communications not covered by the proposal, as well as those regulated by the proposal, are subject to Section 14(e) of the Act.

Proposed Rule 14e-2 would proscribe the purchase of subject company securities by any person who, on the basis of non-public information received directly or indirectly from a bidder, knows or has reason to believe that the bidder will make a tender offer,

unless such person makes a public announcement of the information received. If adopted, the proposal would establish a "disclose or abstain from trading rule" with respect to such material non-public information under Section 14(e).

SYNOPSIS OF PROPOSALS

A. PROPOSED RULE 14d-1: DEFINITIONS [17 CFR 240.14d-1]

At present, Regulation 14D [17 CFR 240.14d-1 through 240.14d-101] does not contain a definitional section. Proposed Rule 14d-1 would establish a definitional framework which would clarify terms frequently used in the proposed Regulations and would provide guidance concerning the operation of certain terms.

Under the proposal, terms defined in the Exchange Act and in Rule 12b-2 [17 CFR 240.12b-2] promulgated thereunder would have the same meaning in the proposed Regulations, unless the context otherwise requires. In addition, eight specific terms would be defined.[27] The terms "bidder" and "subject company" provide short-hand references to the principal participants in a tender offer and avoid certain perjorative terms now commonly used to describe participants in a tender offer. The term "bidder" would mean any person[28] who makes a tender offer or on whose behalf a tender offer is made. With respect to proposed Rule 14e-2, discussed below, the term would include a person who proposes to made a tender offer. While the term would not include an issuer which makes a tender offer for securities of any class of which it is the issuer,[29] it would pertain to an affiliate of such issuer which makes a tender offer for such securities. Thus, the proposed definition is consistent with Section 14(d)(8) of the Exchange Act, the legislative history of Section 14(d) of that Act[30] and the Commission's administrative practice under present Regulation 14D.

Both record holders and beneficial owners of the securities being sought by the tender offer are included in the term "security holders." The term "beneficial owner" would have the same meaning as that set forth in Rule 13d-3 [17 CFR 240.13d-3] which provides that a beneficial owner of a security includes any person who directly or indirectly has or shares voting power and/or investment power with respect to the specified security.[31]

The bidder's formal offer, the related transmittal letter and amendments thereto are specifically included in the term "tender offer material." Other materials are included in this non-exclusive definition, if such materials are disseminated to security holders by the bidder and, directly or indirectly, solicit, invite or request tenders of securities. Thus, a document which is not published, sent or given to security holders or which does not solicit, invite or request tenders would not be included in the meaning of the term.

The terms "executive officer" and "business day" are patterned on similar terms in the general rules and regulations under the Securities Act and/or the Exchange Act.[32] A business day would consist of the twenty-four hour period of any day on which the Commission's principal office in Washington, D.C. is scheduled to be open for business. This definition will, if adopted, provide a uniform standard for the application of time periods under the proposed Regulations.

In view of the clarification of commencement date for tender offers under proposed Rule 14d-6 and the time period provisions of proposed Rules 14d-7 and 14e-1, discussed below, it was necessary to determine by rule when the time periods under Sections 14(d)(5) and 14(d)(6) of the Exchange Act and the proposed rules start running. Since the 1976 Release, courts have taken divergent positions.[33] In the Commission's view, the course embodied in proposed Rule 14d-1(g) would provide maximum protection for investors and certainty to bidders by starting the time periods running on the date of commencement of the tender offer. Thus, the date of commencement would trigger the operation of certain provisions of the Williams Act and the substantive provisions thereunder, if the tender occurs on a business day. If the tender offer is first published, sent or given to security holders on a non-business day, the Williams Act and the rules thereunder would apply on that date but the statutory and regulatory time periods would begin to run on the first business day after the tender offer is commenced. For example, if a tender offer for less than all the securities of a subject company is first published on business day 1 and assuming that proposed Rule 14d-9 is not used by the bidder, the offer commences on that date and the initial ten day period under Section 14(d)(6) will begin running on business day 1 and end on day 10. If the tender offer commenced on a non-business day, the provisions of the Williams Act would apply but the initial time period for proration would begin on the first business day following commencement and toll ten days thereafter. This standard would establish consistency between the statute and the rules promulgated thereunder with respect to the time counting procedure.

Proposed Rule 14d-1(h) incorporates the definition of the term "security position listing" as that term is used in proposed Rule 17Ad-8 [17 CFR 240.17Ad-8].[34] The term is there defined, in the case of the securities of any issuer held by a registered clearing agency,[35] in the name of the clearing agency or its nominee, as a list of the participants[36] in the clearing agency on whose behalf the clearing agency holds the issuer's securities and of the participant's respective positions in such securities as of a specified date. In the event that further rulemaking action is not taken with respect to proposed Rule 17Ad-8 prior to the adoption of proposed Rule 14d-1, a description similar to that stated above, rather than a reference to another rule, will be included in the definition of "security position listing."

B. PROPOSED RULE 14d-2: FILING AND DELIVERY OF TENDER OFFER STATEMENT [17 CFR 240.14d-2]

Section 14(d)(1) of the Exchange Act imposes certain requirements upon a bidder who makes a tender offer for any of certain specified classes of

[27] Similar versions of three of these terms are currently in Schedule 14D-1. Instruction C contains a definition of the term "executive officer" and Instruction G defines the terms "bidder" and "subject company" for purposes of Schedule 14D-1. Since the inclusion of these terms would be unnecessary if proposed Rule 14d-1 is adopted, the Commission is also proposing technical amendments which would delete the definitions of these terms from Schedule 14D-1. Moreover, the amendments to Rule 14d-1 contained in the 1977 Release contained a definition of the term "beneficial owner" that is identical to that contained in the proposal.

[28] The term "person" would have the same meaning as that under Sections 3(a)(9) and 14(d)(2) of the Exchange Act.

[29] Such tender offers are the subject of proposed Rule 13e-4 and related Schedule 13E-4.

[30] *See* 1970 Senate Hearings at 12; and S. Rep. No. 91-1125, 91st Cong., 2d Sess. 5 (1970), which stated that: a controlling person of a corporation is subject to the tender offer requirements of Section 14(d) and the acquisition reporting requirements of Section 13(d), whereas the issuer is exempt.

[31] *See* Release No. 34-14692 (April 28, 1978) (43 FR 18484).

[32] For "executive officer" see Securities Exchange Act Release No. 34-15380 (December 4, 1978) (43 FR 58181). Terms relating to the business hours of the Commission are set forth in 17 CFR § 230.110 and 17 CFR 240.0-2.

[33] See "Peterson v. Federal Development Co." 416 F. Supp. 466, 475-476 (S.D.N.Y. 1976) (date of publication of a tender offer should be excluded with the following date being counted as day one); and "Copperweld Corp. v. Imetal" 403 F. Supp. 579, 596-597 (W. D. Pa. 1975) (statute could not be interpreted to discount the date of publication in calculating withdrawal period).

[34] Release No. 34-14493 (February 22, 1978) (43 FR 8269).

[35] The term "clearing agency" is defined in Section 3(a)(23) of the Exchange Act.

[36] The term "participants" is defined in Section 3(a)(24) of the Exchange Act.

equity securities[37] if upon consumation of such tender offer the bidder would be the beneficial owner of more than 5 percent of such class of securities. At the time the tender offer is first published, sent or given to security holders, the bidder is required to have filed with the Commission a statement containing the information specified by Section 13(d) of the Exchange Act and such additional information as required by Commission rule or regulation and to have sent a copy of such statement to the subject company. The bidder's requests or invitations for tenders as well as advertisements of the tender offer are required to be part of the filing. Similar procedures are required with respect to additional material soliciting or requesting tender offers after the initial solicitation. The provisions of present Rule 14d-1 [17 CFR 240.14d-1] are patterned on those of Section 14(d)(1). Moreover, present Rule 14d-1(b) requires that in the event of a material change in the Schedule 14D-1 the bidder promptly file an amendment thereto.

With certain changes, proposed Rule 14d-2 would generally conform to the present filing framework. Under proposed Rule 14d-2(a), a bidder making a tender offer subject to Section 14(d)(1) of the Exchange Act would be required to take certain actions as soon as practicable on the date of commencement of the tender offer.[38] In addition to making a filing with the Commission, the bidder would be required to deliver, as soon as practicable on the date of commencement, a copy of the Schedule 14D-1 to: the subject company;[39] any previous bidder which has filed a Schedule 14D-1 with respect to a tender offer which has not yet terminated [40] for the same class of securities; and to any national securities exchange where the class of the subject company's securities sought by the tender offer is registered and listed for trading [41] and to the National Association of Securities Dealers Inc. (the "NASD"), if the class of securities sought by the tender offer is traded in the over-the-counter market.[42]

In view of the importance of providing for exchanges to receive such information in a manner sufficient to enable such exchanges to institute appropriate action in a timely fashion, the Commission believes this delivery requirement is in the public interest and for the protection of investors. Comment is specifically requested, however, on whether this delivery requirement should be limited to the principal exchange [43] on which the class of securities is registered and listed for trading and whether such a limitation would result in the timely dissemination of sufficient information relating to the tender offer to other exchanges on which such class of securities is registered and listed for trading. In addition, the Commission believes that the requirement of delivery to the NASD with respect to any security quoted in NASDAQ would serve the public interest and would protect investors by encouraging early and widespread dissemination of information concerning the tender offer and by permitting the NASD, where appropriate, to suspend the display of quotation information on NASDAQ terminals pending such dissemination.[44] The Commission specifically requests comment, however, on whether this requirement is appropriate or places an unwarranted burden on bidders.

Proposed Rule 14d-2(b) would require a similar filing and delivery procedure with regard to material changes in the information set forth in the Schedule 14D-1. An amendment

---

[37] The specified classes are: any class of equity securities registered pursuant to Section 12 of the Exchange Act; any class of equity securities which would have been required to be registered pursuant to Section 12 except for the exemption provided in Section 12(g)(2)(G) of the Exchange Act; and any class of equity securities issued by a closed-end investment company registered under the Investment Company Act of 1940.

[38] Compliance with the proposal would not be required until the date of commencement of the tender offer. (The "commencement" of a tender offer is the subject of proposed Rule 14d-6 [17 CFR 240.14d-6], discussed below.) The standard of filing as soon as practicable on the date of commencement is a departure from present practice. Because of the difficulty in ascertaining the precise time that a tender offer is first published, sent or given to security holders, bidders are often unable to file a Schedule 14D-1 with the Commission on the same date that the offer is commenced. For example, since the publication times of morning newspapers occur prior to the Commission's opening of business a bidder under the present rule files the Schedule 14D-1 prior to the day of publication in order to avoid a technical violation of present Rule 14d-1(a). Similar problems are presented in tender offers which use mailings to shareholders. In the Commission's view, the standard in proposed Rule 14d-2(a) would enable a bidder to file with the Commission as soon as practicable on the same day that the tender offer is first published, sent or given to security holders and would facilitate the confidentiality of the tender offer until the date of commencement. For example, with respect to the filing requirement "as soon as practicable" normally would be at the time the Commission opens for business. Moreover, the proposal would be consistent with the legislative history of the Williams Act. As originally introduced, the bill which became the Williams Act required a filing five days before the tender offer was made. In rejecting the requirement of pre-commencement filing and review, the Senate Report stated that: [I]n view of the authority and responsibility of the Securities and Exchange Commission to take appropriate action in the event that inadequate or misleading information is disseminated to the public to solicit acceptance of a tender offer, the bill as approved by the committee requires only that the statement be on file with the Securities and Exchange Commission at the time the tender offers is first made to the public. 1967 Senate Report at 4. The Commission believes that the determination of the exact time that a tender offer is first made was not intended by Congress for the application of the filing requirement. To avoid the premature disclosure of an impending tender offer and consequent market disruption, the Commission believes that a filing as soon as practicable on the date of commencement is an adequate requirement. Advance filing would not be required by the proposal. However, a practice has developed of bidders voluntarily submitting tender offer material to the staff prior to the date of commencement. The proposal is not intended to change the present administrative practice of the staff receiving and reviewing on an informal basis tender offer documents that have not been filed.

[39] This section implements the specific provisions of Section 14(d)(1) of the Exchange Act.

[40] This requirement is necessary to implement the additional withdrawal rights provided to security holders under proposed Rule 14d-7(a)(2) by ensuring that a previous bidder receives prompt notice of the commencement of another tender offer for the same class of securities.

[41] The disclosure in the subject company's most recent Annual Report on Form 10-K [17 CFR 249.310] could be relied upon in determining which, if any exchange should receive a transmittal, unless the bidder has reason to believe that such information is not current. A bidder would not be required to transmit materials to an exchange upon which the subject class of securities has unlisted trading privileges. Normally, the standard of "as soon as practicable" on the date of commencement would be prior to the opening of a securities exchange.

[42] While Section 14(d)(1) of the Exchange Act does not specifically require a bidder to transmit a statement to each exchange where the security is registered and listed for trading, the Commission believes that the transmittal requirement is necessary and appropriate in the public interest and for the protection of investors and therefore within the Commission's authority under other provisions of the Exchange Act, such as Section 14(d)(4). Cf. Section 13(d)(1) of the Exchange Act. Because of the unsettling and disruptive effects that tender offers may have on trading activity in the subject company's securities, the Commission believes that securities exchanges and the NASD should have direct access to the complete disclosure by a bidder during a tender offer. Additionally, the requirement will expand access to such statements. Moreover, such information will assist exchanges in any determination to suspend trading in the subject company's securities and therefore can be instrumented in avoiding manipulation of such securities. See also testimony of Donald L. Calvin, Vice President, New York Stock Exchange, 1967 Senate Hearings at 76.

[43] Principal exchange means the securities exchange on which the greatest amount of exchange trading in the class of securities takes place.

[44] *See* NASD By-Laws, Schedule D, Section II(B)(3).

to that Schedule disclosing the change[45] would be filed with the Commission and delivered to the subject company, and to any exchange and/or the NASD, as required by proposed Rule 14d-2(a), promptly but not later than the date that disclosure of the material change is first published, sent or given to security holders. An exception to the filing and delivery requirement would be made with respect to an amendment to Schedule 14D-1 that only disclosed the number of shares deposited to date and/or announced an extension of the tender offer's duration. Filing and delivery of such an amendment could be made by the bidder promptly after the date such limited tender offer material is first published, sent or given to security holders.[46]

Under proposed Rule 14d-2(c), additional tender offer material would be required to be filed as an exhibit to Schedule 14D-1 and to be delivered to the subject company, any exchange and/or the NASD, as required by proposed Rule 14d-2(a). The filing and delivery would be made promptly but not later than the date such additional tender offer material is first published, sent or given to security holders, except for additional tender offer material described in the proviso in Rule 14d-2(b) which could be filed and delivered promptly after dissemination to security holders.

In certain situations, paragraphs (b) and (c) of the proposal would operate in tandem. If a material change occurs in the Schedule 14D-1, the amendment disclosing such change would be filed and delivered pursuant to proposed paragraph (b) and the additional tender offer material disseminated to security holders would be filed as an exhibit and delivered pursuant to proposed paragraph (c). If the additional tender offer material did not disclose a material change, only proposed Rule 14d-2(b) would apply but the filing of such additional tender offer material with the Commission would be considered as an amendment to the Schedule 14D-1.

In the Commission's view, proposed Rule 14d-2 would, if adopted, create a more efficient system of filings with the Commission and deliveries to interested persons. The requirement of delivery to securities exchanges and/or the NASD is designed to assist these organizations by providing them with information on a timely basis. Not only would access to Schedule 14D-1's and amendments thereto be expanded, but the decision-making process concerning trading halts, or in the case of the NASD quotation halts, would be assisted. Therefore, the Commission believes that the burden placed on bidders by this requirement would be outweighed by the anticipated benefits to investors and is justified by the remedial purposes of the Williams Act.

C. PROPOSED RULE 14D-3: DISCLOSURE REQUIREMENTS WITH RESPECT TO TENDER OFFERS [17 CFR 240.14D-3]

Present Rule 14d-1(c) sets forth the information required to be published, sent or given to security holders by a bidder in any tender offer subject to Section 14(d)(1) of the Exchange Act. Present Rule 14d-1(d) specifies the information which must be included in a bidder's additional soliciting material.

Proposed Rule 14d-3 is similar to the present disclosure framework in that it would establish specific disclosure requirements with respect to any tender offer subject to Section 14(d)(1) of the Exchange Act. Unlike the present rule, however, the disclosure requirements of proposed Rule 14d-3(a) would differentiate between the various methods by which tender offers are disseminated to security holders. Proposed Rule 14d-3(b), which sets forth the information required to be disclosed, follows the pattern established by proposed Rule 14d-3(a).

With respect to cash tender offers, the disclosure requirements of proposed Rule 14d-3(a) will depend on two factors: (1) whether the tender offer is disseminated by one or more of the methods provided under proposed Rule 14d-4;[47] and (2) if proposed Rule 14d-4 is applicable, whether the method involves the use of a summary advertisement of the tender offer. When a bidder uses a method under proposed Rule 14d-4 to disseminate a cash tender offer, either sub-paragraph (a)(1), (a)(2), or (a)(3) of proposed Rule 14d-3 will determine what information described in proposed Rule 14d-3(b) will be required to be disseminated to security holders. Since the summary publication and use of stockholder lists contemplate the use of a summary advertisement, sub-paragraphs (a)(2) and (a)(3) of the proposal would require a bidder using either of these methods to comply with proposed Rule 14d-3(b)(1) and (b)(2). Since the long-form method of publication does not involve a summary advertisement, proposed Rule 14d-3(a)(1) would only require a bidder to comply with sub-paragraph (b)(1) of the proposal. If a cash tender offer is disseminated other than by means of proposed Rule 14d-4, proposed Rule 14d-3(a)(4) would be applicable and would require a bidder to disclose to security holders the information set forth in proposed Rule 14d-3(b)(1).

The disclosure requirements for an exchange tender offer subject to Section 14(d)(1) of the Exchange Act would be governed by proposed Rule 14d-3(a)(4) which would require a bidder making such an offer to disclose to security holders the information required by proposed Rule 14d-3(b)(1).

Unconventional cash and exchange tender offers would also be governed by proposed Rule 14d-3(a)(4). In such offers, bidders would be required to disclose to security holders the information required by proposed Rule 14d-3(b)(1).

Pursuant to the provisions of proposed Rule 14d-3(a), the information set forth in proposed Rule 14d-3(b)(1) would be required to be disclosed to security holders in the tender offer materials of any tender offer which is subject to Section 14(d)(1) of the Exchange Act. While substantially similar to the information required by present Rule 14d-1(c), the proposal would require additional disclosure with respect to the scheduled expiration date of the tender offer (proposed Rule 14d-3(b)(1)(iv)), the manner of effecting withdrawal of deposited securities (proposed Rule 14d-3(b)(1)(v)), and, in a tender offer for less than all the securities of a class, the present intention or plan of the bidder with respect to such offer in the event of an oversubscription by security holders (proposed Rule 14d-3(b)(1)(vi)). Disclosure of what a bidder presently intends or plans to do if a partial tender offer is oversubscribed will provide meaningful information to security holders who are confronted with an investment decision whether to tender, sell into the market or hold securities sought by such an offer. Such disclosure is made in some tender offer materials under current practice and is consistent with the legislative history of the Williams Act.[48]

Proposed Rule 14d-3(b)(2) specifies the limited disclosure to be made in a summary advertisement. In addition to certain specified information, the summary advertisement would contain appropriate instructions as to how security holders would be able to obtain the bidder's tender offer material at

[45] Thus, the amendment would not be required to repeat those portions of the Schedule 14D-1 or prior amendments thereto which are unchanged.

[46] The Commission received testimony at the Tender Offer Hearings about the logistical problems of filing such limited, but important, material with the Commission prior to or contemporaneous with its public release. The Commission believes that the proviso in proposed Rule 14d-2(b) would facilitate rapid dissemination of such limited material to shareholders and would resolve any procedural difficulties incurred in such dissemination.

[47] As discussed below, proposed Rule 14d-4 would establish three non-exclusive methods of dissemination: long-form publication; summary publication; and the use of stockholder lists and security position listings.

[48] See 1970 Senate Hearings at 12.

the bidder's expense and a statement that the disclosure made in such tender offer materials is incorporated by reference in the summary advertisement.

Because of the requirements of present Rule 14d-1(c), bidders have been unable to employ any kind of summary advertisement.[49] Under the proposal, bidders would be permitted to use summary advertisements but only in cash tender offers which are disseminated by means of either summary publication or the use of stockholder lists under proposed Rules 14d-4 (a)(2) and (a)(3), respectively.

In addition to the limited types of tender offers in which it can be used, the content of a summary advertisement would be limited to the information enumerated in proposed Rule 14d-3(b)(2). The inclusion of information other than that specified by proposed Rule 14d-3(b)(2) in the initial summary advertisement or that specified by proposed Rule 14d-3(c)(2) in a subsequent summary advertisement would result in making those provisions unavailable to the bidder which would then be required to comply with the disclosure requirements of proposed Rules 14d-3(b)(1) and (c)(1). In order to highlight the limited nature of a summary advertisement, an Explanatory Note is included in proposed Rule 14d-3(b)(2). The Note explains that the Rule prevents the inclusion of a transmittal letter in the summary advertisement. This is intended to encourage shareholders to request the bidder's tender offer materials in making their investment decision with respect to the tender offer.

Proposed Rule 14d-3(c) pertains to disclosure in additional soliciting materials. As with present Rule 14d-1(d), proposed Rule 14d-3(c)(1) would permit a bidder to omit certain information that had previously been furnished to security holders in connection with the tender offer. Under proposed Rule 14d-3(c)(2), a summary advertisment published, sent or given to security holders after the initial summary advertisment would contain disclosure of any material change in the bidder's tender offer materials or a fair and adequate summary thereof.

The Commission believes that proposed Rule 14d-3 would, if adopted, establish a comprehensive framework for the disclosure required to be disseminated to security holders in the bidder's initial solicitation and in additional soliciting material. The limited disclosure requirements for summary advertisements will provide increased flexibility to bidders making cash tender offers subject to Section 14(d)(1). It is also anticipated that the use of summary advertisements will facilitate rapid dissemination of the fact that a tender offer is being made and by putting security holders on a more equal footing will prevent those who have acquired such information from taking advantage of those who have not.

D. PROPOSED RULE 14d-4: DISSEMINATION OF CASH TENDER OFFERS

[17 CFR 240.14D-4]

Although present Rule 14d-1(c) specifies certain information which must be included when a tender offer is published, sent or given to security holders, it does not specify any particular method of disseminating such information.

In passing the Williams Act, Congress considered the situation in which a shareholder is required to make an investment decision with respect to a tender offer without adequate information as "precisely the kind of dilemma which our Federal securities laws are designed to prevent."[50] By requiring full and fair disclosure for the benefit of investors in connection with tender offers, Congress acted to resolve this dilemma and to "correct the current gap in our securities laws."[51] The disclosure process envisioned by the Williams Act is not limited to the items of information which must be disclosed. The process includes the dissemination of material information to shareholders. Without ensuring that the information is communicated to shareholders, the disclosure requirements are of limited utility and the shareholder is again faced with the same dilemma which Congress sought to resolve by passing the Williams Act.

In "Piper v. Chris-Craft Industries, Inc."[52] the Supreme Court recognized that dissemination is part of the disclosure purpose of the Williams Act by stating that "the legislation is designed solely to get needed information to the investor * * *."[53] In support of this statement, the Court relied on a statement by Senator Williams:

We have taken extreme care to avoid tipping the scales either in favor of management or in favor of the person making the takeover bids. S. 510 is designed solely to require full and fair disclosure for the benefit of investors. 113 Cong. Rec. 24664 (1967).[54]

Thus the legislative history and case law recognize that dissemination, as indicated in the term "published, sent or given to security holders" is part of the disclosure process of the Williams Act.

Proposed Rule 14d-4 would encourage adequate dissemination of cash tender offers that are subject to Section 14(d)(1) of the Exchange Act. Designed to operate in conjunction with proposed Rules 14d-3 and 14d-5, the proposal would establish standards whereby information disseminated in compliance with its provisions would be deemed "published, sent or given to security holders" for purposes of Section 14(d)(1).

Since exchange tender offers are disseminated pursuant to procedures under the Securities Act of 1933, the proposal pertains only to cash tender offers. In recognition of the diverse ways that cash tender offers are disseminated, particularly in unconventional tender offers, the proposal is not intended to constitute either mandatory or exclusive regulation. Rather, the proposal would add content and clarity to the term "published, sent or given" by providing definitions of three alternative methods of disseminating cash tender offers: long-form publication; summary publication, and use of stockholder lists and security position listings. Moreover, a bidder would be able to utilize more than one of the proposed methods so long as there is full compliance with each method used.

Long-form publication under proposed Rule 14d-(a)(1) is substantially equivalent to the current practice and would require adequate publication of the tender offer in a newspaper or newspapers.[55]

Summary publication under proposed Rule 14d-4(a)(2) would require the adequare publication of a summary advertisement of the tender offer in a newspaper or newspapers.[56] Additionally, this method would re-

[49] See Interpretive Notice in SEC News Digest of May 12, 1978.

[50] 1967 Senate Report at 2.

[51] Id. at 4. Confirming the view that the legislation which would become the Williams Act was designed to fill "a rather large gap in th securities statutes," Manual Cohen, then Chairman of the Commission, testified that

[T]he general approach . . . of this bill is to provide the investor, the person who is required to make a decision, an opportunity to examine and assess the revelant facts.

Id. at 15. In other testimony, then Chairman Cohen stated that the legislation was designed so that the information which is to be provided to the investor does in fact get to him within a reasonable time, and effectively.

Id. at 63. Mr. Cohen also recognized the relationship between dissemination and disclosure in stating that disclosure is useful if it reaches the people for whom it is intended.

[52] 430 U.S. 1 (1976).

[53] Id. at 31.

[54] Id. (Emphasis in original). See also "Rondeau v. Mosinee Paper Corp." 422 U.S. 49 (1975) in which the Court stated—

[T]he purpose of the Williams Act is to insure that public shareholders who are confronted by a cash tender offer for their stock will not be required to respond without adequate information regarding the qualification and intentions of the offering party.

Id. at 58.

[55] The disclosure requirements for long form publication are set forth in proposed Rule 14d-3(b)(1), discussed above.

[56] The limited disclosure required by a summary advertisement is set forth in proposed Rule 14d-3(b)(2), discussed above.

quire a bidder to mail or otherwise furnish with reasonable promptness its tender offer materials [57] to any security holder upon request. In order to comply with this provision, a bidder would be required to have sufficient copies of the tender offer materials available for distribution when the summary advertisement appears. This method is intended to facilitate rapid communication of a tender offer to security holders and to ensure dissemination of tender offer materials while at the same time decreasing the escalating costs and scheduling problems associated with publishing all tender offer materials in newspapers.

The operation of proposed Rule 14d-4(a)(3) which relates to the use of stockholder lists and security position listing will necessarily depend on the subject company's election pursuant to proposed Rule 14d-5. If the subject company elects to conduct the mailing and transmittal of the bidder's tender offer materials to security holders pursuant to proposed Rule 14d-5(b), the bidder under proposed Rule 14d-4(a)(3)(i) would be required to deliver sufficient sets of its tender offer materials to the subject company; to publish a summary advertisement of the tender offer; and to mail or otherwise furnish a copy of the tender offer materials to any requesting security holder.

If the subject company elects to furnish the stockholder list and security position listing(s) to the bidder pursuant to proposed Rule 14d-5(c), the bidder under proposed Rule 14d-4(a)(3)(ii) would be required: to mail its tender offer materials to each record holder; to transmit its tender offer materials to the participants named on the security position listing(s) for subsequent transmittal by banks, brokers and similar persons to beneficial owners; to publish a summary advertisement of the tender offer; and to mail or otherwise furnish its tender offer materials to any requesting security holder.

The dissemination of material changes to the information published, sent or given to security holders is governed by proposed Rule 14d-4(b) which would be substantially similar in operation to proposed Rule 14d-4(a). With respect to a material change which occurs within five business days prior to the expiration of the tender offer, the bidder under proposed Rule 14d-4(b) would be required to take reasonable steps to assure the same method or methods used during the tender offer are used to disseminate the material change to security holders and to issue a press release disclosing the material change.

[57] The disclosure required by such tender offer materials is set forth in proposed Rule 14d-3(b)(1), discussed above.

While proposed Rule 14d-4 is not mandatory and a cash tender offer may be disseminated by other methods,[58] it should be noted that any bidder who uses a summary advertisement must fully comply with the provisions of proposed Rule 14d-4(a)(2). Similarly, a bidder who makes a request pursuant to proposed Rule 14d-5 for access to the subject company's stockholder list and security position listing(s) with respect to a cash tender offer must fully comply with the applicable provisions of proposed Rule 14d-4(a)(3).

By encouraging the prompt and widespread dissemination of cash tender offers, proposed Rule 14d-4 is intended to implement the remedial purposes of the Williams Act by affording a greater number of security holders the opportunity to receive, consider and evaluate the disclosure required by proposed Rule 14d-3.

E. PROPOSED RULE 14d-5: DISSEMINATION OF CERTAIN TENDER OFFERS BY THE USE OF STOCKHOLDER LISTS AND SECURITY POSITION LISTINGS [17 CFR 240.14d-5]

Of the methods presently used to disseminate tender offers, the transmittal of tender offer material to security holders by the use of stockholder lists and security position listings of clearing agencies is perhaps the most efficient method of getting the needed information to shareholders.[59] However, neither the Williams Act nor the rules promulgated thereunder specifically require a subject company to furnish stockholder lists to a bidder or to transmit the bidder's tender offer materials to security holders.

The case law which had addressed the issue of a bidder's access to stockholder lists of the subject company has considered the issue primarily in the context of the self-operative language of Section 14(e) of the Exchange Act.[60] Although several decisions have indicated that under certain circumstances the self-operative language of Section 14(e) may provide an independent basis for a bidder to obtain a stockholder list,[61] the case law has not been uniform.[62]

The 1976 proposal [63] was intended to establish such uniformity and to implement the purposes of the Williams Act [64] by providing a bidder making a tender offer subject to Section 14(d)(1) of the Exchange Act with direct access to the stockholder list of the subject company and the security position listings of clearing agencies upon the bidder's compliance with certain requirements.

The commentators on the 1976 proposal expressed widely varying views. Those opposed to the proposal were concerned about the provision's approach, the Commission's jurisdiction and conflict with state corporation law.[65] A number of commentators suggested that the Commission adopt an approach similar to present Rule 14a-7 (17 CFR 240.14a-7), which applies, among other things, to proxy contests.[66]

Based in part on the views expressed by the commentators, the Commission is proposing Rule 14d-5 which would enable a bidder making a tender offer subject to Section 14(d)(1) to disseminate its tender offer materials to security holders by means of mailings and transmittals pursuant to the subject company's stockholder list and security position listings of clearing agencies. Instead of the direct access approach of the 1976 proposal, proposed Rule 14d-5 would provide an option to

[58] See proposed Rule 14d-3(a)(4) which pertains to the disclosure requirements for tender offers and material changes thereto which are published, sent or given to security holders otherwise than pursuant to proposed Rule 14d-4(a).

[59] For a discussion of the importance of stockholder lists in contested tender offers, see, e.g., Aranow, Einhorn & Berlstein, "Developments in Tender Offers for Corporate Control," 169-173 (1977), and Note, "Tender Offers and Bidder Access to Target Company Shareholder Lists," 1978 Brigham Young U.L. Rev. 436.

[60] But see "Commonwealth Oil Refining Co. v. Tesoro Petroleum Corp.," 75 Civ. 1949 JMC (S.D.N.Y. 1975) in which Judge Connella in ordering the subject company to furnish the stockholder list to the bidder stated that the order was being issued "[U]pon the authority of the Williams Act and in the exercise of this court's equity power." For a discussion of this opinion, see Atkins, Stockholder Lists, 9 Rev. Reg. 901 (1976). See also Applied Digital Data Systems Inc. v. Milgo Electronics Corp., 425 F. Supp. 1163 (S.D.N.Y. 1977).

[61] See, e.g., "American Chain & Cable Co., Inc. v. Babcock & Wilcox, Ltd.," Civ. Action No. B75-370 (D. Conn. 1975); "Mesa Petroleum Co. v. Aztec Oil & Gas Co.," 406 F. Supp. 910 (N.D. Tex. 1976), "Hunt Building Corp. v. Property Trust of America," No. EP-770005 (W.D. Tex. 1977).

[62] "A & K Railroad Materials, Inc. v. Green Bay and Western Railroads Co.," 437 F. Supp. 636 (E.D. Wis. 1977).

[63] For a discussion of 1976 proposed Rule 14e-1, see the 1976 Release. This proposal resulted in part from the Tender Offer Hearings in which the Commission specifically sought comments concerning the promulgation of a rule governing access by a bidder to stockholder lists of subject companies. Securities Exchange Act Release No. 11003 (September 9, 1974) (39 FR 33935).

[64] In adopting the Williams Act, Congress was concerned that both the bidder and subject company have "an equal opportunity to fairly present their case." 1967 Senate Report at 3. The direct access approach of the 1976 proposal would have ensured that investors received adequate information and would have placed the bidder on an equal footing with the subject company vis-a-vis the stockholder list.

[65] See generally Summary of Comments at 157-189.

[66] Id. at 184-185.

the subject company either to furnish the lists to the bidder within specified periods of time and at the bidder's expense or to mail and transmit the bidder's tender offer materials to security holders within specified periods of time at the bidder's expense. While the option feature is patterned after Rule 14a-7, proposed Rule 14d-5 is specificaly designed to operate in the context of tender offers. Unlike Rule 14a-7, the proposal would (1) require a reasonably current stockholder list, which would be updated during the tender offer; (2) pertain to security position listings of clearing agencies; (3) require a mailing to all record holders named on the stockholder list and a transmittal to beneficial owners pursuant to the security position listing of the bidder's tender offer materials and amendments thereto; (4) establish time periods for the election by the subject company and, depending on that election, the furnishing of the lists or the mailing/transmittal of the bidder's tender offer materials to security holders; and (5) under certain circumstances to preclude the subject company from conducting any separate mailing or similar communication or from publishing any advertisement relating to the tender offer until it has complied with certain procedures specified in the proposal. Although the proposal would impose duties on the bidder and the subject company and regulate their conduct, it would not regulate transfer agents or clearing agencies.[67]

In light of the option provided to the subject company and case law under Rule 14a-7,[68] the Commission does not anticipate that the proposal, if adopted, would create unwarranted conflict with state law provisions controlling the rights of shareholders to be furnished direct access to the stockholder list.

A brief discussion of the various provisions of the proposal and rulemaking authority is set forth below.

1. Provisions of Proposed Rule 14d-5

Of the seven paragraphs contained in proposed Rule 14d-5, five relate to the subject company and two pertain to the bidder. Generally, the operation of the proposal would depend on the election of the subject company.

The principal paragraph relating to the requirements imposed on the subject company is proposed Rule 14d-5(a). This provision would be triggered by the subject company's receipt of a written request from a bidder for the use of stockholder lists and security position listings in the dissemination of a tender offer to security holders.[69] Upon receipt, the subject company would be required to promptly notify certain persons, including transfer agents, of the receipt of the request and to promptly ascertain whether the current stockholder list was prepared as of a date earlier than ten business days before the date of the bidder's request. If the list falls outside the ten business day period, the subject company would be required to prepare a stockholder list as of the most recent practicable date which shall not be earlier than ten business days before the bidder's request. While proposed Rule 14d-5(a) provides the subject company with an election either to furnish the lists to the bidder or to conduct the mailing/transmittal of the bidder's tender offer materials, this provisions also would require the subject company: to deliver oral notification of its election, which would be confirmed in writing, to the bidder within one business day of its receipt of the bidder's request of the result of the election; and to comply, pursuant to its election, with either paragraph (b) or (c) of the proposal.

If the subject company elects to conduct the mailing and transmittal of the bidder's tender offer materials and amendments thereto to security holders, proposed Rule 14d-5(b) would be applicable and would require the subject company to contact each participant named on the security position listings of clearing agencies and to ascertain the approximate number of beneficial owners of the securities held by such participant. Within four business days of the subject company's receipt of the bidder's tender offer materials, the subject company would be required to mail a copy of such materials to each record holder named on the stockholder list and to transmit the appropriate number of sets of such materials to the participants on the security position listings for subsequent delivery to beneficial owners of the securities sought by the tender offer. These actions would be conducted in substantially the same manner as the subject company would conduct a mailing or transmittal of its own materials to security holders pursuant to such lists and listings. To facilitate the publication of the bidder's summary advertisement of the tender offer pursuant to proposed Rule 14d-4(a)(3)(i)(B), the subject company would promptly notify the bidder of the commencement of the mailing/transmittal. Proposed Rule 14d-5(b)(5) provides and updating procedure with respect to the stockholder list under which persons who become record holders after the date of the stockholder list are furnished copies of the bidder's tender offer materials. Under proposed Rule 14d-5(b)(6) a similar mailing/transmittal procedure would be followed with respect to amendments to the bidder's tender offer materials.

If the subject company elects to furnish the stockholder list and security postion listings to the bidder, proposed Rule 14d-5(c) would be applicable and would require the subject company to furnish such list and listings within two business days of the bidder's request. The subject company would also be required to update the stockholder list. While the name and address of record holders would be furnished to the bidder, the amount of securities held by such persons would not be disclosed. The amount of securities held need not be disclosed because the purpose of the proposal is to facilitate dissemination of the tender offer in the interest of all security holders; not to facilitate the tender offer by permitting the bidder to selectively mail only to large holders. This provision also serves to protect the interest of holders in the confidentiality of their holdings.

Proposed Rule 14d-5(d) is designed to clarify the application of other provisions of the federal securities laws to a subject company under the mailing/transmittal procedure. The subject company or any affiliate or agent of the subject company would not be deemed to be an underwriter of the bidder's securities within the meaning of Section 2(11) of the Securities Act of 1933 in an exchange tender offer and would not be liable under the federal securities laws for the disclosure in the bidder's tender offer materials solely because of the compliance by the subject company or any affiliate or agent of the subject company with one or mbre of the requirements of the proposal.

Proposed Rule 14d-5(e) is a remedial provisions designed to ensure the subject company's compliance with certain of the proposal's requirements. Under this provisions, the subject company would be precluded from conducting a shareholder communication relating to the bidder's tender offer until certain actions were com-

[67] Transfer agents may possess the stockholder list and clearing agencies may possess the security position listings which are included in the dissemination process. With respect to regulation of clearing agencies, see proposed Rule 17Ad-8. Release No. 34-14493 (February 22, 1978) (43 FR 8269).

[68] See "Wood, Walker & Co. v. Evans," 300 F. supp. 171 (D. Colo. 1969), aff'd, 461 F. 2d 852 (10th Cir. 1972), in which the district court addressed the compatability of the Colorado shareholder inspection statute in effect at the time, Colo. Rev. Stat. § 3-15-17, with Rule 14a-7, and held that the two provisions were not mutually exclusive, that utilization of some of the federal procedures did not constitute a binding election, and that the federal rule did not preempt the state statute.

[69] The subject company would not be required to comply with the proposal if the written request failed to meet the requirements of paragraph (f) of the proposal, discussed below.

pleted. If the subject company elects to conduct the mailing/transmittal of the bidder's tender offer materials, the subject company would be able to conduct its own mailing to shareholders or to publish an advertisement relating to the tender offer only after the subject company completed the initial mailing/transmittal of the bidder's tender offer materials. If the subject company elects to furnish the lists to the bidder, it would be able to conduct its own mailing to security holders or to publish advertisements relating to the tender offer only after the initial stockholder list and security position listings had been furnished to the bidder. The Commission recognizes that proposed Rule 14d-5(e) would, if adopted, impose cretain restrictions on the subject company's ability to communicate with its security holders concerning the tender offer, but believes that such restrictions are necessary and appropriate for the prompt compliance of the subject company with the bidder's request and for the rapid dissemination of the bidder's tender offer materials to the subject company's security holders. In light of the fact that the subject company would receive notice of the pending tender offer in advance of its commencement, the restrictions envisioned by the proposal which pertain only to shareholder communications would not impose an undue burden on a subject company and the benefits to its security holders would outweigh any burden imposed on the subject company.

The provisions of proposed Rule 14d-5(e) are qualified by the proviso contained therein. Under the proviso, a subject company would be able to make a "stop-look-and-listen" communication to its shareholders pursuant to proposed Rule 14d-10(e) at any time subsequent to the commencement date of the bidder's tender offer or the date of any public annoncement by such bidder which contains at least the information specified in proposed Rule 14d-6(d) (1) through (3). For example, if the bidder commences a tender offer by means of long form publication on the same date that the bidder requests the subject company to comply with proposed Rule 14d-5, the provison to proposed Rule 14d-5(e) would enable the subject company to issue a "stop-look-and-listen" letter on the date of the bidder's long form publication even if the subject company has not yet complied with the applicable provisions of proposed Rule 14d-5.

While proposed Rule 15d-5(f) sets forth the information which a bidder must include in its written request in order to initiate the operation of proposed Rule 14d-5(a), proposed Rule 14d-5(g) would impose certain requirement on the bidder. If the subject company elects to conduct the mailing/transmittal of the bidder's tender offer materials, proposed Rule 14d-5(g)(1) would require the bidder to deliver its tender offer materials, including amendments to the subject company and to comply with the dissemination requirements of proposed Rule 14d-4(a)(3)(i). If the subject company elects to furnish the lists to the bidder, proposed Rule 14d-5(g)(2) would require the bidder: to use such lists exclusively in the dissemination of tender offer materials to security holders; to return the lists to the subject comany promptly after the termination of the bidder's tender offer; to accept, handle and return all lists on a confidential basis; not to retain any list or any information derived from such list after the termination of the tender offer; to mail all the tender offer materials, including amendments, to each person on the stockholder list and updates thereto; to follow a procedure under which all tender offer materials would be transmitted to each participant named on a security position listing for subsequent delivery to the beneficial owners of the securities; and to comply with the dissemination requirements of proposed Rule 14d-4(a)(3)(ii). Regardless of the subject company's election the bidder would be required to promptly reimburse the subject company for the reasonable out of pocket expenses incurred by the subject company and its agents in complying with the requirements of the proposal. Such reimbursement would include, but not be limited to: postage; clerical expenses; expenses incurred in the preparation and updating of the stockholder list; and expenses incurred by banks, brokers and other persons in forwarding the bidder's tender offer materials, including amendments, which were paid by the subject company.

2. Rulemaking Authority for Proposed Rule 14d-5

Comments on the 1976 proposal raised the issue of the Commission's authority to adopt proposed rules without resolving that issue. The Commission believes that the adoption of proposed Rule 14d-5 would implement the remedial purposes of the Williams Act and is consistent with the legislative history of that Act. In addition to Sections 14(d)(1) [70] and 23(a) [71] of the Exchange Act, the rule is proposed under Sections 14(d)(4) and 14(e).

The Commission's rulemaking authority under Section 14(d)(4) of the Exchange Act [72] extends to "any solicitation * * * to accept * * * a tender offer or request or invitation for tenders * * *." While the term "solicitation" is not defined in the Williams Act, the Commission, on the basis of the statute, legislative history and administrative practice, concludes that a tender offer when it is first published, sent or given to security holders constitutes a solicitation to holders to accept the offer. Support for this position is found in Section 14(d)(1), which as part of the Williams Act may be used in pari materia with Section 14(d)(4). Section 14(d)(1) which pertains to the bidder states in pertinent part:

> Copies of any additional material *soliciting* or requesting such tender offers subsequent to the *initial solicitation* or request shall contain such information as the Commission may by rules or regulations prescribe * * * (Emphasis supplied).

The legislative history of the Williams Act supports this construction of the Commission's authority under Section 14(d)(4). The provision which was to become Section 14(d)(4) was first proposed by the Commission in 1966 in a memorandum to the Senate Committee on Banking and Currency commenting on S. 2731, which was the original legislation proposed by Senator Williams. In the memorandum, the Commission described the proposed provision as follows:

> The Commission suggests, as proposed section 14(d)(2), that any solicitation or recommendation to security holders to accept or reject a tender offer should be made in accordance with the Commission's rules and regulations. This proposed section would provide the Commission with authority to regulate the manner and content of any opposition to or support for a tender offer.[73]

Section 2(3) of S. 510 as introduced by Senator Williams in 1967 is identical to Section 14(d)(4). In the Senate hearings on S. 510, Ralph S. Saul, President of the American Stock Exchange, testified that Section 2(3) should be "confined to solicitations or recommendations made by or on behalf of the person making the tender offer, and solicitations or recommendations made by or on behalf of the subject company or its management." [74] Mr. Saul believed that brokers should be exempted from the pro-

[70] Section 14(d)(1) is discussed above at text accompanying footnote 4.

[71] Section 23(a) of the Exchange Act grants the Commission the authority to adopt rules to implement the provisions of that Act.

[72] Section 14(d)(4) of the Exchange Act provides that: Any solicitation or recommendation to the holders of such a security to accept or reject a tender offer or request or invitation for tenders shall be made in accordance with such rules and regulations as the Commission may prescribe as necessary or appropriate in the public interest or for the protection of investors.

[73] 112 Cong. Rec. 19003-07 (1966). In the memorandum, the Commission used the terms "soliciting" and "solicitation" to refer to a bidder's tender offer materials. Additionally the memorandum referred to "countersoliciting" material when speaking of material opposed to a tender offer. Id. at 19005.

[74] 1967 Senate Hearings at 99.

vision. In response to Mr. Saul, the Commission in a supplemental memorandum concerning S. 510 disagreed with the suggestion that Section 2(3) should not apply to solicitations by persons other than the offeror and the management. In support of inclusion of brokers within the purview of the provision, the memorandum stated that "[Q]uite frequently offerors * * * retain security dealers to solicit on their behalf * * *." [75]

In describing the provisions of Section 2(3) on the floor of the Senate, Senator Williams stated:

[I]n the rather common situation where existing management or third parties contest a tender offer, shareholders may be exposed to a bewildering variety of conflicting appeals and arguments designed to persuade them either to accept or reject the tender offer. The experience of the SEC with proxy fights offers ample evidence that this type of situation can best be controlled, and shareholders most adequately informed, if both sides to the argument are subject to the full and fair disclosure rules of the Federal securities laws.[76]

The broad scope of the rulemaking authority and the wide range of persons whose conduct would be subject to regulations under Section 14(d) were recognized in the Senate and House Reports on S. 510, which stated:

Under this provisions the Securities and Exchange Commission could specify the information to be included in any recommendation by management or others in favor or in opposition to a tender offer and could regulate the solicitation of investors by brokers and dealers who are often compensated for shares tendered as a result of their activities. It would also enable the Securities and Exchange Commission to regulate the activities of persons who make competing tender offers or seek to influence the investor's decision on a tender offer.[77]

Therefore, the legislative history of Section 14(d)(4) indicates that a bidder is included within the sub-section and that the manner and content of the disclosure contained in any solicitation by a bidder falls within the purview of Section 14(d)(4).

Immediately after enactment, the Commission adopted temporary rules and regulations.[78] Present Rule 14d-4, which was adopted pursuant to Section 14(d)(4), regulates the filing of Schedule 14D's with the Commission. Included in this rule, is a proviso which states that:

This rule shall not apply to (1) a person required by Rule 14d-1(a) to file a statement * * *.

The only person required to file a statement under Rule 14d-1(a) is the bidder. Thus, Rule 14d-4 recognizes that bidders, whether initial or competing, are within the rulemaking authority of Section 14(d)(4). Since this rule was promulgated by the Commission contemporaneously with the passage of the Williams Act and in view of the Commission's participation in the development of the legislation, the conclusion as to bidders in Rule 14d-4 is entitled to weight in construing the rulemaking authority[79] under the subsection.

Proposed Rule 14d-5 is also being proposed under Section 14(e) of the Exchange Act. In addition to a self-operative antifraud provision, Section 14(e) grants the Commission rulemaking authority to define and to prescribe means reasonably designed to prevent fraudulent, deceptive or manipulative acts or practices. The subject company's refusal to provide stockholder lists for the dissemination of a tender offer may prevent shareholders from considering the merits of the tender offer upon the basis of all of the information that the Act provides for. Such prevention of full disclosure of the tender offer, could facilitate improper activities.[80] Thus the proposal is a means reasonably designed to prevent fraudulent or deceptive acts or practices.

The question of shareholders lists in the context of a tender offer was discussed during the Senate hearings on the Williams Act in 1967. In response to a statement by a witness that there should be access to the stockholder lists in order for a tender offer to be made,[81] Senator Williams asked then Chairman Cohen whether the Commission has the authority to require shareholder lists in tender offers.[82] Chairman Cohen answered that the Commission has certain power under the antifraud provisions to deal with these problems but such provisions do not provide express authority to the Commission to write rules to establish requirements outside of those provisions. Chairman Cohen also stated that:

[T]he Commission has not felt, and I don't think that anyone has ever suggested, that the Commission now has authority in a tender offer to insist that management provide a bidder with a stockholder list. Whether that might be appropriate once this bill is enacted and once the Commission is granted adequate authority would be a matter we would determine based upon our experience in these contests, the needs of investors, and the particular situation.[83]

During the 1970 Senate hearings which considered amendments to the Williams Act, including the grant of rulemaking authority to the Commission under Section 14(e), the question of shareholder lists was raised again. Senator Packwood asked: (1) whether the Commission has the authority to insist that management provide a bidder with a stockholders list; (2) whether the authority has been exercised; and (3) if not, whether "in all fairness to all bidders" the lists should be made available.[84] In response, then General Counsel and now Commissioner Loomis stated that the Commission did not exercise the power to require the lists but rather left the matter to state law. He further noted that "enactment of this legislation would increase the likelihood" that the Commission has such power and that its exercise would be a policy question.[85]

The legistative history of the Williams Act therefore indicates that Congress was aware of the issue of stockholder lists and was informed that the rulemaking authority granted to the Commission by the legislation could include regulation of stockholder lists in the context of tender offers.

F. PROPOSED RULE 14D-6: DATE OF COMMENCEMENT OF A TENDER OFFER [17 CFR 240.14D-6]

The concept of commencement of a tender offer, e.g., when a tender offer is first published, sent or given to security holders, is essential to the operation of the Williams Act, particularly the substantive provisions for withdrawal and proration under Sections 14(d)(5) and 14(d)(6), respectively. Despite its importance, neither the statute nor the present rules thereunder defines the term.

In light of importance of the concept and the need to provide content and clarity to the term, the Commission is proposing Rule 14d-6. The provisions of proposed Rule 14d-6(a)(1)(i) through (iii) are related to the methods of dissemination under proposed Rule 14d-4. Hence, a tender offer using long-form publication commences on the date of the newspaper publication. A tender offer disseminated by means of summary publication commences on the date the summary advertisement appears in the newspa-

[75] Id. at 201.

[76] 133 Cong. Rec. 855-856 (January 18, 1967).

[77] 1967 Senate Report at 9; H.R. Rep. No. 1711, 90th Cong., 2nd Sess. (1968) ("1968 House Report") at 10.

[78] Securities Exchange Act Release No. 8370 (July 30, 1968) (33 FR 11015).

[79] See, e.g., "Collins v. SEC," 432 U.S. 46 (1977); "United States v. National Association of Securities Dealers," 422 U.S. 694, 719 (1975); "Udall v. Tallman," 380 U.S. 1, 16-17 (1965); "Zuber v. Allen," 396 U.S. 168 (1969); "Red Lion Broadcasting v. F.C.C.," 395 U.S. 367 (1959); "N.L.R.B. v. Boeing Co.," 412 U.S. 67 (1973).

[80] See Aranow, Einhorn & Berlstein, "Developments in Tender Offers for Corporate Control," 170 (1977).

[81] 1967 Senate Hearings at 165 (Testimony of Stanley F. Reed).

[82] Id. at 176.

[83] Id.

[84] Hearings on S. 336 and S. 3431 Before the Subcomm. on Securities of the Senate Comm. on Banking and Currency, 91st Cong. 1st Sess. 12 (1970) ("1970 Senate Hearings").

[85] Id. at 28.

per. If the stockholder list method is used, the bidder is also required to publish a summary advertisement which would appear on the date the mailing/transmittal is commenced. Publication of the summary advertisement would commence the tender offer under proposed Rule 14d-6(a)(1)(iii). Proposed Rule 14d-6(a)(1(iv) covers exchange tender offers and follows the current practice of commencing the bidder's offer when its registration statement under the Securities Act becomes effective. Revised Rule 14d-6(a)(1)(v) pertains to any tender offer which does not fall within the purview of another provision of the proposed sub-paragraph and would thus pertain to the commencement of an unconventional cash tender offer.

To eliminate confusion in the event of an overlapping of the commencement provisions of proposed Rule 14d-6(a)(1) for cash tender offers, proposed Rule 14d-6(a)(2) provides that the first method used by the bidder will determine the date of commencement.

While revised Rule 14d-6(a) mainly represents a codification of present administrative practice, proposed Rule 14d-6(b) would prevent a potential abuse prevalent in current tender offer practice. It has become a common practice for a bidder to publicly announce the material terms of a cash tender offer in advance of the offer's formal commencement. Such announcements trigger market mechanisms, such as arbitrageur activity, which are normally attendant to the tender offer itself. This practice has become a matter of increasing concern because it causes investors to make investment decisions with respect to a tender offer on the basis of incomplete information. The Commission believes that this is the type of situation which the Williams Act was designed to prevent.[66]

Under proposed Rule 14d-6(b), a bidder's public announcement through a press release, newspaper advertisement or public statement of certain material terms of a cash tender offer would be deemed to commence the bidder's tender offer under Section 14(d) of the Exchange Act. The exception clause is designed to prevent the imposition of undue burdens on a bidder and further to assure the availability of security holder's rights under Section 14(d)(5) and 14(d)(6) and the rules promulgated thereunder. Under the exception clause, the tender offer would not be deemed to commence on the date of the public announcement if within five business days thereof the bidder either: (1) issues a subsequent public announcement stating that the bidder has determined not to continue with the offer; or (2) complies with the filing requirements of proposed Rule 14d-2(a) and disseminates the disclosure required by proposed Rule 14d-3(a) to security holders pursuant to proposed Rule 14d-4 or otherwise. If the bidder makes the subsequent announcement, the initial announcement will not be deemed to commence an offer except for the application of Section 14(d)(7). This option would allow a bidder to consult with the subject company and to make an evaluation of the probability of the success of a "friendly" acquisition which might further benefit investors. If the bidder complies with the filing, disclosure and dissemination requirements of the second option, the tender offer will commence on the date of such compliance, rather than the date of the public announcement. If the bidder exercises neither option, the tender offer is deemed to commence on the date of the initial announcement. Since the use of this alternative will result in filing and disclosure violations, it is not anticipated that a bidder making such a public announcement will exercise the "do nothing" alternative.

The Commission believes that proposed Rule 14d-6(b) will have beneficial effects for investors and will eliminate or reduce the type of practice of pre-commencement public announcements of the material terms of tender offers which have been observed to result in many of the abuses the Williams Act was enacted to prevent.

In order to provide certainty to bidders, the information which will trigger proposed Rule 14d-6(b) is set forth in proposed Rule 14d-6(c). Generally, this information relates to: the identity of the bidder and the subject company; a statement of the class of securities and amount thereof; and disclosure of the price or range of prices being offered therefor. Safe harbor provisions for a public announcement which will not trigger the operation of proposed Rule 14d-6(b) are set forth in proposed Rules 14d-6 (d) and (e).

### G. PROPOSED RULE 14d-7: ADDITIONAL WITHDRAWAL RIGHTS [17 CFR 14d-7]

Section 14(d)(5) of the Exchange Act provides an unconditional right of withdrawal to persons who have deposited securities pursuant to a tender offer for seven days after such offer is first published, sent or given to security holders.[67] Additionally, the Section provides a right of withdrawal at any time after sixty days after the date of the original offer is the deposited securities have not been accepted for payment by the bidder by that date.

Section 14(d)(5) also grants rulemaking authority to the Commission. The statutory provisions apply, "except as the Commission may otherwise prescribe by rules, regulations or order as necessary or appropriate in the public interest or for the protection of investors." To date the Commission has not adopted any rule under Section 14(d)(5) which governs withdrawal rights.

Extensive testimony was received at the Tender Offer Hearings concerning withdrawal rights. This testimony raised questions about the effectiveness of the seven day withdrawal right and pointed out that, with the possible exception of the sixty day provision, Section 14(d)(5) does not cover withdrawal in a competing tender offer situation.

Proposed Rule 14d-7 is intended to enhance the effectiveness of withdrawal by providing withdrawal rights to security holders in addition to those provided by the statute. These additional withdrawal rights are set forth in proposed Rule 14d-7(a) which is intended to interrelate with proposed Rule 14e-1(a).[68]

Proposed Rule 14d-7(a)(1) would extend the statutory seven day withdrawal right to fifteen business days from the date of commencement of the tender offer.[69] Under this provision, security holders would have a longer period to reconsider their decision to deposit their shares and the bidder would have a reasonable time prior to the expiration of the offer to ascertain the number of shares deposited and to determine whether to accept such securities for payment or to change the terms of the offer, such as extending the expiration date.

Proposed Rule 14d-7(a)(2) would establish a conditional withdrawal right in competing tender offer situations under which shares could be withdrawn on the date and for ten business days following the commencement date of a competing tender offer by either another bidder or the subject company. This withdrawal right would be conditioned on two factors. First, the right would apply only to deposit-

[66] As stated in the Senate and House Reports accompanying the Williams Act: Without knowledge of who the bidder is and what he plans to do, the shareholder cannot reach an informed decision. He is forced to take a chance. For no matter what he does, he does it without adequate information to enable him to decide rationally what is the best possible course of action. This is precisely the kind of dilemma which our security laws are designed to prevent. 1967 Senate Report at 2; 1968 House Report at 3.

[67] This provision has been construed as creating an absolute right of rescission during the seven day period. Aranow & Einhorn, Tender Offers for Corporate Control, 134 (1973).

[68] As discussed below, proposed Rule 14e-1(a) would establish a minimum period of thirty business days for any tender offer.

[69] The date of commencement would be determined under the applicable provision of proposed Rule 14d-6, discussed above.

ed securities which have not been accepted for payment by the bidder prior to the commencement date of the competing tender offer. Rather than defining the term, acceptance for payment would be made in the manner expressly set forth in the bidder's tender offer materials. Second, the bidder must have notice or otherwise have knowledge of the commencement of the competing tender offer. The notice requirement is designed to obviate delays in the application of the withdrawal right and to avoid placing undue burdens on a bidder which would be required to provide such withdrawal rights. To ensure prompt application of the withdrawal right, proposed Rule 14d-7(c) would create a presumption of knowledge by a bidder of the commencement of a competing tender offer. The presumption is predicated on the bidder's receipt of a copy of the competing bidder's Schedule 14d-1 pursuant to proposed Rule 14d-2 or the bidder's receipt of notice from the subject company or otherwise that the subject company has commenced a competing tender offer. The withdrawal right is designed to operate in contested and in multiple tender offer situations. For example, if after the commencement of X's tender offer, Y commences a competing tender offer, a withdrawal right would apply to securities deposited with X. If the subject company or Z subsequently commences a third tender offer, the withdrawal right under proposed Rule 14d-7(a)(2) would apply to securities deposited with both X and Y, assuming the conditions, described above, are met.

Proposed Rule 14d-7(b) states that the additional withdrawal rights, viz., the initial fifteen business day right and the ten business day right in the event of a competing tender offer, would be computed on a concurrent, rather than a consecutive basis. The Explanatory Note which follows this proposed paragraph provides an example of the concurrent computation.

Pursuant to a comment made on the 1976 proposal,[60] the Commission is proposing Rule 14d-7(d) which addresses the question of how security holders can properly effect withdrawal of deposited securities. The proposal is intended to avoid the imposition by a bidder of overly restrictive procedures for effecting withdrawal.

Mindful of the importance of withdrawal to the purposes of the Williams Act and the need to provide effective withdrawal rights to security holders, the Commission is requesting comment on whether other withdrawal rights should be provided in special situations. Specifically, the Commission is requesting comment on whether a withdrawal right should be provided to security holders when a bidder amends its tender offer materials in the absence of a competing tender offer and the amendment discloses a material change, other than an increase in the consideration offered, in the disclosure previously disseminated to security holders. While the Commission believes that proposed Rule 14d-7(a)(1) addresses this issue, specific comment is requested. Additional withdrawal rights similar to that specifically described above could be adopted in lieu of or in addition to that proposed in Rule 14d-7(a)(1).

H. PROPOSED RULE 14d-8: PURCHASES AFTER TERMINATION OF CERTAIN TENDER OFFERS [17 CFR 240.14d-8]

At present, Regulation 14D does not provide for the integration of purchases by a bidder either before the commencement of a tender offer or after its termination with those purchases made by such bidder pursuant to the tender offer. Under proposed Rule 14d-8(a)(1), any purchase of or offer to purchase certain securities, described below, by either the bidder or its affiliates during a forty business day period following the bidder's tender offer would be integrated with such tender offer for purposes of Section 14(d)(7) of the Exchange Act. The proposal would be triggered by the termination of the bidder's tender offer which would be determined by the date the tender offer actually ended. Tender offers subject to Section 14(d)(1) of the Exchange Act which terminate on the originally scheduled expiration date or any extension thereof would be covered by the proposal as would unsuccessful tender offers which terminate without the acceptance of any securities for payment by the bidder.[61]

The integration provision of proposed Rule 14d-8(a)(1) would apply to post termination purchases or offers to purchase the securities described in proposed Rule 14d-8(a)(2). Securities of the same class sought by the bidder in its tender offer would be included as well as options, warrants, rights, convertible securities or other securities which involve contractual rights, privileges or other provisions to purchase or acquire through exercise, conversion, exchange or otherwise securities sought by the bidder's tender offer.

The proposal is intended to make the operation of Section 14(d)(7)[62] move effective. Under the terms of the statute, the "Best Price Rule" of Section 14(d)(7) is limited to increases in the offered consideration prior to the expiration of the offer. One method of circumventing the effect of the statute and denying equality of treatment to the subject company's shareholders is for a bidder to allow the tender offer to expire without increasing the offered consideration and to take advantage of the unsettled market conditions which normally follow a tender offer by making market purchases at various prices. Alternatively, a bidder may within a short time after the first tender offer make a second tender offer for securities of the same class for different consideration which may be higher than that offered in the first tender offer.[63]

The avoidance of the best-price provision of the Williams Act problem is applicable to any tender offer. The possibility of avoidance is increased, however, in a tender offer for less than all the outstanding securities of a class, particularly where such offer is uncontested and/or oversubscribed.

While post-termination purchases undertaken to eliminate the rights of shareholders to the increased consideration under Section 14(d)(7) might constitute violations of Section 14(e) of the Exchange Act or Section 10(b) of that Act and the rules thereunder, proposed Rule 14d-8 takes another approach to the matter. The proposal is intended to provide an effective means of discouraging and preventing circumvention of the "best price rule." Under this proposal, the purchases or offers to purchase would be deemed to occur prior to the expiration of the bidder's tender offer within the meaning of Section 14(d)(7). Thus, the purchase during the forty business day period would be integrated with those purchases made during the tender offer. For example, if a tender offer subject to Section 14(d)(1) is made for less than all the securities of a class at $50 per share and within forty business days of the termination of such offer the bidder makes a second tender offer at $60 per share, each shareholder who received $50 per share in the first offer would receive an additional $10 per share. Similarly,

[60] See File No. S7-649, comment letter submitted by Sullivan & Cromwell. Summary of comments at 70.

[61] The public announcement described in proposed Rule 14d-6(b)(1) would not be deemed a termination of a tender offer.

[62] Section 14(d)(7) provides that when a bidder increases the offered consideration prior to the expiration of a tender offer it must pay the increased consideration to all security holders whose shares are taken up pursuant to the tender offer. Thus, a bidder is required to pay the increased consideration to security holders who tendered prior to the announcement of the increase and whose securities are purchased pursuant to the offer. As stated in the Senate and House Committee reports, the purpose of Section 14(d)(7) is to "assure fair treatment of those persons who tender their shares at the beginning of the tender period and to assure equality of treatment among all shareholders who tender their shares." 1967 Senate Report at 10; 1968 House Report at 11.

[63] See Aranow & Einhorn, "Tender Offers for Corporate Control," ¶135 (1973).

if a tender offer subject to Section 14(d)(1) of the act is made for $20 per share and within forty business days of the termination of such offer the bidder makes open market purchases of the same securities at $15 per share, the shareholders who sold to the bidder in such open market transactions would be entitled to an additional $5 per share from the bidder.

It is anticipated that the effect of the proposal would be to preclude purchases by the bidder or its affiliates during the forty business day period which are at variance with the remedial purposes of Section 14(d)(7). However, the proposal would not preclude all purchases by the bidder or its affiliates during the forty business day period. Those purchases made in accordance with the "best price rule" would be permitted, as would purchases which are specifically exempted from the proposal.

Proposed Rule 14d-8(b) would exclude certain purchases during the forty business day post-termination period from the operation of proposed Rule 14d-8(a). These would include the purchases pursuant to the exercise of options, warrants or rights on the conversion of convertible securities or the performance of agreements to purchase securities of the class which was the subject of the tender offer which were acquired or entered into prior to the date of commencement of the bidder's tender offer. Such purchases would be exempt from the proposal only if the Schedule 14D-1, or an amendment thereto, or the tender offer materials disseminated to security holders by the bidder contained disclosure of such options, warrants, rights, convertible securities or agreements to purchase.[84] Additionally, proposed Rule 14d-8(b) would exempt a merger involving the subject company under certain conditions. Other agreements or transactions could be exempt from the proposal pursuant to Commission order.

As proposed, Rule 14d-9 applies to certain purchases subsequent to the termination of any tender offer subject to Section 14(d)(1) of the Exchange Act. Specific comment is requested as to whether the regulation of post-termination purchases should distinguish between a tender offer for any or all securities of a class of a subject company and a tender offer for only a portion of the securities of such class. If such a distinction should be made, comment is requested as to the rationale therefor and the form thereof. In the event such a distinction is appropriate, comment is also requested as to whether integration during the forty business day period following a tender offer for any or all securities of a class should exclude open market and privately negotiated purchases by or on behalf of the bidder and apply only to a subsequent tender offer during such period by the bidder or any affiliate of such bidder for securities of the same class.

Although purchases pursuant to a second tender offer which is commenced within the forty business day period would be integrated with those made in the first tender offer for purposes of Section 14(d)(7), proposed Rule 14d-8 does not specifically pertain to integration of pre-commencement purchases. The Commission invites specific comment on the need for, the Commission's authority to adopt and the alternatives available with respect to a pre-commencement integration rule under the provisions of the Williams Act.

It should be noted that proposed Rule 14d-8 would have no effect on present Rule 10b-13 [17 CFR 240.10b-13].

I. PROPOSED RULE 14d-9: EXEMPTION FROM STATUTORY PRO RATA REQUIREMENTS [17 CFR 240.14d-9]

When a tender offer is made for less than all the outstanding securities of a class of an issuer and if, within the first ten days after commencement of such offer, a greater number of shares are deposited than the bidder is bound or willing to take up, Section 14(d)(6) provides that any securities accepted for payment by the bidder are taken up on a pro rata basis. Additionally, Section 14(d)(6) provides that the pro rata provision also applies to securities deposited within ten days after notice of an increase in the offered consideration.

An issue has been raised as to whether a bidder who extends pro rata acceptance rights for the entire tender offer or for a period in excess of the statutory requirements violates Section 14(d)(6). The genesis of this issue may be found in the legislative history of the Williams Act. As originally proposed, Section 2(5) of S. 510 provided for unlimited proration in tender offers for less than all the securities of a class. This concept was criticized by a vice president of the New York Stock Exchange, who believed that the bill should conform to the exchange's procedure.[85] He also advocated an additional ten day pro rata period if the offering price is increased.[86] In proposing this alternative, he stated:

> [W]hile we do not believe that the full pro rata approach should be prohibited, we do not think it should be required by law as the only permissable method.[87]

Subsequent to his testimony, then Chairman Cohen discussed the New York Stock Exchange's suggestion,[88] stating that:

> [A]part from the unduly brief period suggested by the exchanges, which would put considerable pressure on shareholders to reach a hasty decision, * * * I think the exchanges' [sic] basic suggestion has considerable merit, but I am afraid it oversimplifies the situation to some extent. * * * This problem is another example of the complexities which have developed, and are developing, in this new and burgeoning field. It is because of this complexity that the flexibility provided by reasonable grants of rulemaking authority to the Commission are needed.[89]

In discussing the hearings on the provision which became Section 14(d)(6), the Senate report stated:

> [I]n view of the experience of the New York Stock Exchange, your committee believes that the pro rata requirement can be so limited * * *.[90]

In the Commission's view, the provisions of Section 14(d)(6) establish minimum proration requirements and, so long as these limited, minimum requirements are complied with, a bidder may provide in its tender offer for pro rata periods in excess of the statutory requirement. Therefore, the Commission is proposing Rule 14d-9 which would establish an exemption to Section 14(d)(6) pursuant to Section 14(d)(8)(C) of the Exchange Act for a tender offer for less than all the outstanding equity securities of a class in which the bidder provides pro rata periods in excess of those required by Section 14(d)(6). Thus, a bidder would be allowed to use any proration period of more than ten days with respect to either the period after commencement or after notice of an increase in the consideration offered or both. The availability of the exemption would be conditioned on disclosure of the different pro rata periods in the tender offer materials disseminated by the bidder on the date of commencement of the tender offer. In order to avail itself of this provision, a bidder would be required to notify security holders at the earliest possible time that pro rata time periods in addition to those required by statute will be provided in the tender offer. If no provision is made in the tender offer materials disseminated to security holders on the

[84] Such disclosure is required under Item 7 of Schedule 14D-1.

[85] 1967 Senate Hearings at 77 (Testimony of Donald Calvin).

[86] Id. at 93.

[87] Id. at 77. See also testimony of Donald Calvin, Vice President, New York Stock Exchange, before the House Committee in which he stated: [W]e believe that the minimum 10-day pro rata procedure * * * is fair to all concerned * * *. 1968 House Hearings at 50.

[88] 1967 Senate Hearings at 186-188 and 190. See also Supplemental Memorandum of the Securities and Exchange Commission With Respect to Certain Comments on S. 510, Id. at 200.

[89] Id. at 186.

[90] 1967 Senate Report at 4.

commencement date, the time requirements of Section 14(d)(6) would apply and the bidder would be unable to vary the proration periods during the course of the tender offer. Disclosure at the commencement of a tender offer is intended to avoid confusion and uncertainty among security holders confronted with a tender offer for their shares.

The proposal would be voluntary and would operate in a manner similar to that under Section 14(d)(6). The Commission believes that the proposal would resolve any doubt among practitioners that a bidder could extend either or both of the pro rata acceptance provisions beyond the ten day periods without being in violation of Section 14(d)(6). Moreover, the proposal would decrease the likelihood of hasty decison making by investors and would increase the opportunity for equal participation by all security holders in tender offers for less than all securities of a class.

J. PROPOSED RULE 14D-10: SOLICITATION/RECOMMENDATION STATEMENTS WITH RESPECT TO CERTAIN TENDER OFFERS [17 CFR 240.14D-10]

Rule 14d-4 presently requires that with certain exceptions persons making solicitation or recommendation to accept or reject a tender offer subject to Section 14(d) of the Exchange Act must file with the Commission a statement containing the information specified by current Schedule 14D at the time such solicitation or recommendation is first published, sent or given to such security holders. Certain information contained in the Schedule 14D is required to be included in the solicitation/recommendation that is disseminated to security holders. Amendments to such statements are also required to be promptly filed with the Commission.

With certain significant changes, proposed Rule 14d-10 would generally conform to the present framework. Instead of present Schedule 14D, a new proposed Schedule 14D-10, described below, would be filed with the Commission and hand delivered to certain persons as soon as practicable on the date the solicitation/recommendation is first published, sent or given to security holders.[91] While the time requirement for the filing and deliveries varies from the present rule, it is consistent with that in proposed Rule 14d-2(a) and is intended to address similar concerns. Moreover, similar time requirements for bidders and persons making solicitations of recommendations with respect to tender offers would facilitate the Commission's even-handed administration of the Williams Act.

As noted above, proposed Rule 14d-10(a)(2) would require deliveries of the proposed Schedule 14D to certain persons, which would include the bidder, the subject company, national securities exchanges and the NASD. The delivery requirement, however, varies and would depend, in part, on whether the person making the solicitation/recommendation is other than the subject company or an affiliate of the subject company. While a copy of proposed Schedule 14D-10 would be required to be delivered to the bidder by any person making a solicitation/recommendation, a delivery to the subject company would be required only if the person were other than the subject company or an affiliate of the subject company. This provision is designed to avoid unnecessary deliveries. If the person making the solicitation/recommendation is either the subject company or an affiliate of the subject company, a copy of the proposed schedule would be delivered to any national securities exchange where the class of securities being sought by the bidder is registered and listed for trading and to the NASD if such class of securities is authorized for quotation on NASDAQ. This requirement is intended to promptly provide these organizations with information relating to the tender offer. In order to avoid undue burdens on persons making solicitations/recommendations, this requirement is restricted to subject companies and their affiliates.

Under proposed Rule 14d-10(b) material changes in the information contained in the Schedule 14D-10 would be filed with the Commission and delivered to the same persons who received the initial filing under proposed Rule 14d-10(a)(2). Such amendments would be filed and delivered promptly, but not later than the date the material change is first published, sent or given to security holders. This provision would also codify present practice by requiring dissemination of the material change to security holders.

As in present Rule 14d-4(c), proposed rule 14d-10(c) would establish minimum informational requirements for the solicitation or recommendation that is communicated to security holders.[92] The present disclosure regarding arrangements or understandings between the person making the solicitation/recommendation and the bidder and/or the subject company would be expanded to include any material contract, agreement, arrangement or understanding and any actual or potential conflict of interest between such persons. Provision would be made for the exclusion of disclosure of employment contracts with the subject company or its affiliates under certain conditions. Recent transactions in subject company securities by the person making the solicitation/recommendation, its executive officers, directors, affiliates and subsidiaries would be disclosed in addition to the present intent of such persons to tender to the bidder, to sell into the market or otherwise, or to hold securities being sought by the bidder, to the extent such intentions are known by the person making the solicitation/recommendation. Moreover, in any solicitation/recommendation made by the subject company, other than the stop-look-and-listen letter described below, disclosure would be required of any effort being undertaken by the subject company in response to the tender offer which relates to or would result in certain specified events such as a merger, sale of assets, tender offer or material change in capitalization or dividend policy. The Commission believes that this additional disclosure will assist security holders in evaluating a solicitation or recommendation.

With respect to solicitations/recommendations subsequent to the initial solicitation/recommendation, proposed Rule 14d-10(c) would follow the present rule in allowing the omission of information previously furnished to security holders with respect to the tender offer by the person making the solicitation/recommendation.

As discussed above, proposed Rule 14d-10 would generally conform to the present framework. However, the proposal would not apply as broadly as the present rule. In addition to exempting certain persons and communications from the application of the proposal, as under the present rule, proposed Rule 14d-10(d) would specify the persons who would be required to comply with its provisions. Unlike the present rule, a person not identified by proposed Rule 14d-10(d) would be outside the purview of its filing, delivery and disclosure requirements. The solicitations/recommendations to such persons, however, would continue to be subject to Section 14(e).

Proposed Rule 14d-10(d) contains two provisions: subparagraph (d)(1) identifies the persons who solicitations/recommendations are subject to the rule; and subparagraph (d)(2) exempts specific persons from the application of the proposal. While the

[91] While solicitation/recommendations to security holders commonly occur after the commencement of a tender offer, the provisions would apply to such communications prior to the date of commencement of a tender offer subject to Section 14(d)(1) of the Exchange Act. For example, if the bidder announces its intent to make a tender offer and subject company management recommendations against the offer prior to its commencement, that recommendation would be subject to Sections 14(d)(4) and 14(e) and rules promulgated thereunder.

[92] In addition to the specific disclosure requirements of proposed rule 14d-10(c), solicitations/recommendations are also subject to Section 14(e) of the Exchange Act.

two subparagraphs would operate independently, they are also designed to interrelate. Thus, a person may be included within the first subparagraph but not be required to comply with the proposal because of an exemption provided in the second subparagraph. Moreover, a specific exemption is provided for the subject company's "stop-look-and-listen" letter under proposed Rule 14d-10(e).[93]

Specifically, proposed Rule 14d-10(d)(1)(i) includes the solicitations/recommendations of the subject company and any director, officer, employee, affiliate or subsidiary of the subject company. Proposed Rule 14d-10(e) provides an exemption for a subject company's initial, limited communication regarding a tender offer—the "stop-look-and-listen" letter. However, to avail itself of the exemption, a subject company will be required to make a subsequent communication. This subsequent communication would be subject to the requirements of proposed Rule 14d-10.

Proposed Rule 14d-10(d)(1)(ii) specifies that the solicitation/recommendation of any record holder or beneficial owner of any security issued by the subject company, the bidder or any of their affiliates is required to comply with the proposal unless an exemption is available under proposed Rule 14d-10(d)(2). That provision exempts the bidder who is required to file a Schedule 14D-1 by proposed Rule 14d-2 and attorneys, banks, brokers, fiduciaries or investment advisers who are not otherwise participating in the tender offer and who furnish information/advice pertaining to the tender offer to their customers or clients on the unsolicited request of such customers or clients. The information/advice of such persons which relates to the tender offer would also be exempt if furnished solely pursuant to a contract or a relationship providing for advice to the customer or client.

Under proposed Rule 14d-10(d)(1)(iii), any person, such as an agent, who makes a solicitation/recommendation on behalf of any person subject to either sub-paragraph (d)(1)(ii) of the proposal or proposed Rule 14d-2 would be subject to the requirements of proposed Rule 14d-10 unless the solicitation/recommendation by such person is made by means of and pursuant to a solicitation/recommendation that is filed with the Commission under proposed Rules 14d-2 or proposed Rule 14d-10. Thus, an agent making solicitations on behalf of a bidder who has filed a Schedule 14D-1 or subject company who has filed a Schedule 14D-10 would not be included, but the agent, of the bidder or subject company making solicitations of security holders otherwise than pursuant to such filings or not identified in the disclosure of the subject company under Item 5 of proposed Schedule 14D-10 or of the bidder under Item 8 of Schedule 14D-10 would be. This provision is designed to reach any effort by a person required to comply with the proposal to circumvent the provision. Thus, if a shareholder of the subject company does not file a Schedule 14D-10 and causes another person, not otherwise subject to the proposal, to make a solicitation/recommendation to security holders with respect to a tender offer, the shareholder is required to comply under subparagraph (d)(1)(ii) of the proposal and the other person is required to comply under sub-paragraph (d)(1)(iii) of the proposal.

The Commission recognizes that proposed Rule 14d-10 is more limited in scope than the present rule. While all solicitations/recommendations in connection with any tender offer are subject to Section 14(e), the Commission believes that the application of proposed Rule 14d-10 should be limited in order to avoid overregulation. Further, the Commission believes that the standards of proposed Rule 14d-10(d) are reasonable. The solicitations/recommendations of subject companies, their affiliates and their directors, officers, employees and securities holders have a demonstrable impact on the investment decisions of security holders and therefore should be subject to specific regulation. On the other hand, the impact of certain other solicitations/recommendations on the investment decision process is not as clear and would not be included in the specific regulation of the proposal. The Commission is concerned, however, with the adequacy of its regulation as well as the overregulation question. For example, the solicitation/recommendation of a labor union or a supplier of the subject company which is not a shareholder of the subject company would not be required to comply with the proposal, even though it may have a significant interest in the outcome of a tender offer for the subject company's securities. Therefore, the Commission requests specific comment on whether other persons or categories of persons, such as labor unions, civic organizations or customers or suppliers of the subject company should be included within the proposal. In addition, the Commission requests comment on whether other standards such as a "significant economic interest" standard should be included within the scope of the proposal. Finally, the Commission requests specific comment on whether the standard of current Rule 14d-4 is preferable to that articulated in proposed Rule 14d-10(d).

K. PROPOSED SCHEDULE 14D-10: SOLICITATION/RECOMMENDATION STATEMENT [17 CFR 240.14D-101]

A Schedule 14D is currently required to be filed with the Commission by certain persons making a solicitation or recommendation to the holders of securities to accept or reject a tender offer subject to Section 14(d). The Commission has reexamined Schedule 14D and proposes Schedule 14D-10 which is intended to provide more meaningful information to security holders.

While certain items of the proposed Schedule are substantially similar to items in Schedule 14D, several items contain modifications and new instructions and new items are included. Instruction A of the proposed schedule is identical to that contained in Schedule 14D-1. While Instruction B of the proposed Schedule would permit information contained in exhibits to the statement to be incorporated by reference in answer to the items in the schedule, an express statement would be required and a copy of any information or document incorporated by reference would be required to be submitted with the proposed schedule as an exhibit and would be deemed filed with the Commission for purposes of the Exchange Act.[94]

Proposed Item 3(b) would require, if material, a description of any contract, agreement, arrangement or understanding and any actual or potential conflict of interest between the person filing the statement or its affiliates and either: (1) the subject company, its executive officers, directors or affiliates; or (2) the bidder, its executive officers, directors or affiliates. The instruction to proposed Item 3(b) pertains to a Schedule filed by the subject company and provides that when the materiality standard is applicable under certain circumstances it is not necessary to include in the schedule a description of any contract, agreement, arrangement or understanding between the subject company or its affiliates and any executive officer or director of the subject company which relates to employment. The conditions for not including such descriptions in the schedule are: (1) the information

[93] Under proposed Rule 14d-10(e), the subsequent communication must be disseminated not later than fifteen business days prior to the scheduled expiration date of the offer. This requirement is designed to insure that security holders have adequate time to consider the subject company's position in making their investment decision. The subsequent communication would also be required to contain a recommendation to accept or reject the tender offer or must indicate the subject company's determination not to make a recommendation.

[94] This release contains similar technical amendments to Schedule 14D-1 and Schedule 13D-1.

has been disclosed in a proxy statement, report or other communication within one year of the date of filing of the proposed Schedule with the Commission; (2) the proxy statement, report or other communication has been filed with the Commission; (3) the proposed schedule and the solicitation/recommendation published, sent or given to security holders contain specific reference to the proxy statement, report or communication; and (4) a copy of the pertinent portion(s) of the proxy statement, report or other communication is filed as a exhibit to the proposed schedule.

The cross-reference provision is intended to avoid placing undue burdens on the person filing the statement and to avoid repetition of information in the solicitation/recommendation communication which is not materially different from the subject company's proxy statement, report or other communication which was recently provided to shareholders.[95] At the same time, the cross reference in the solicitation/recommendation will alert security holders to material information.

If the statement relates to a recommendation, proposed Item 4(a) would require the person filing the statement to specify whether the statement is advising security holders: to accept the tender offer; to reject the tender offer; or to take other action with respect to the tender offer. Proposed Item 4(b) would require disclosure of the reason(s) for the solicitation/recommendation. The Instruction to this sub-item indicates that a conclusory statement will not be considered sufficient disclosure of the reason. If a conclusory statement is furnished as a reason, disclosure of the basis or bases for such reason would be required.

The disclosure contained in a solicitation/recommendation and in assessing the interest of the person who makes the solicitation/recommendation. In addition to proposed Items 4(b) and 6(a), proposed Items 6(b) and 7 are designed to provide such disclosure. Proposed Item 6(b) would require disclosure as to whether the person filing the statement and certain other persons presently intend to tender to the bidder, sell or hold subject company securities that such persons own either beneficially or of record. The persons included in this subitem are the same persons identified in proposed Item 6(a), which relates to recent transactions in subject company securities. Unlike proposed Item 6(a) which would require that the filing person make inquiry of such persons, Item 6(b) would only require disclosure to the extent known by the person filing the statement.

Proposed Item 7, which would apply only to a solicitation/recommendation made by the subject company, would require disclosure of any negotiation or transaction being undertaken in response to the tender offer by the subject company which relates to or would result in any of the following: (1) an extraordinary transaction, such as a merger or reorganization, involving the subject company or any subsidiary of the subject company; (2) a sale or transfer of a material amount of assets of the subject company or any of its subsidiaries; (3) a tender offer for or other acquisition of subject company securities; or (4) any material change in the subject company's present capitalization or dividend policy.[96]

The disclosure required by proposed Schedule 14D-10 would assist security holders in making their investment decision and in evaluating the merits of a solicitation/recommendation in the context of a tender offer. Therefore, the Commission believes that proposed Schedule 14D-10 is necessary and appropriate in the public interest and for the protection of investors.

PROPOSED RULE 14e-1: UNLAWFUL TENDER OFFER PRACTICES [17 CFR 240.14e-1]

At present, the Commission has not adopted any rule pursuant to the rulemaking authority granted to it under Section 14(e) by the 1970 amendments to the Williams Act.

In light of the 1970 Senate and House Hearings on the Williams Act amendments, the Tender Offer Hearings, the comments received in response to the 1976 Release and the Commission's experience since the 1970 Williams Act amendments were enacted, the Commission believes that the specific rulemaking proposals discussed below are necessary and appropriate in the public interest and for the protection of investors. These proposals, if adopted, would implement and be consistent with the remedial purposes of the Williams Act by prescribing means reasonably designed to prevent fraudulent, deceptive or manipulative acts or practices in connection with any tender offer.

Proposed Rule 14e-1(a) would require that any tender offer must remain open for at least thirty business days from the date it is first published, sent or given to security holders.[97] Several factors are considered by the Commission in publishing this proposal. The Williams Act was intended to "correct the current gap in our securities laws * * *"[98] by providing full disclosure in connection with tender offers. The substantive provisions of that Act were intended to permit a security holder provided with full disclosure to make an investment decision in an unpressured manner.[99] However, certain tender offer practices have developed which increase the likelihood of hasty decision making by security holders confronted with a tender offer. The pejorative terms for these tender offers are well known—"Blitzkrieg" and "Saturday Night Special." Tender offers of an excessively short duration increase the likelihood for hasty, ill-considered decision making and the possibility for fraudulent, deceptive or manipulative acts or practices by a bidder and others. The problems engendered by these tender offers of excessively short duration also may have provided part of the stimulus for some of the 36 states which have enacted anti-takeover statutes since 1968. To the extent this was a purpose of such legislation, the attempt to alleviate the problem was laudable, but has resulted in an inconsistent, overlapping and ofter counterproductive pattern of regulation and in many instances may have tipped the carefully construed balance between bidder and subject company envisioned by the Williams Act in favor of subject company. Accordingly, the Commission believes that a uniformly applied federal regulation would better serve the purposes and policies of the Williams Act, including the interests of investors.

Another factor considered by the Commission is the proposal of Rule 14d-4 which contemplates non-exclusive methods of disseminating cash tender offers. Two of these methods, summary publication and the use of shareholder lists and security position listings contemplate mailings to security holders. The latter method also would require transmission to beneficial owners of the securities being sought of the bidder's tender offer materials through the facilities of brokers, banks and similar persons. The

[95] Cf. "Spielman v. General Host Corp.," 538 F. 2d 39 (2d Cir. 1976).

[96] Efforts by the subject company such as those described in proposed Item 7 can have a determinative effect on the outcome of a tender offer and therefore are material to a security holder who is faced with making an investment decision by a tender offer. Moreover, as stated by the Second Circuit in "Chris-Craft Industries Inc. v. Piper Aircraft Corporation," Corporate officers and directors in their relations with shareholders owe a high fiduciary duty of honesty and fair dealing. See "Swanson v. American Consumer Industries Inc.," 415 F. 2d 1326 (7th Cir. 1969). By reason of the special relationship between them, shareholders are likely to rely heavily upon the representations of corporate insiders when the shareholders find themselves in the midst of a battle for control. 480 F. 2d 341, 364 (2d Cir.), cert. denied 414 U.S. 910 (1973).

[97] With respect to a tender offer which is subject to Section 14(d)(1), the date such offer is first published, sent or given to security holders would be determined by proposed Rule 14d-6, discussed above.

[98] 1967 Senate Report at 4.

[99] Cf. 1967 Senate Hearings at 17.

Commission believes that these methods will provide improved dissemination of tender offer materials, but recognizes that the mailing and transmission will require a certain number of days. To be effective and to avoid the problem of hasty, ill-considered decision making with respect to a shareholder who has only a short time to consider the materials, a minimum period is necessary.

A third factor is the need to provide subject company management an effective opportunity to furnish "any information at its disposal pertinent to the merits of the offer before the security holder responds to it." [100] The Commission believes that the thirty business day minimum period would "avoid tipping the balance of regulation either in favor of management or in favor of the person making the takeover bid." [101]

For similar reasons, the Commission is proposing Rule 14e-1(b) which would require that any tender offer remain open for at least ten business days after the date of the notice of an increase in either the offered consideration or the dealer's soliciting fee. The Commission believes that this proposal would facilitate communication during tender offers and provide a realistic time frame for security holders to evaluate certain increases before making an investment decision. If adopted, this proposal would also alleviate undue pressure on security holders without unduly hindering the person making a tender offer.

It should be noted that paragraphs (a) and (b) of the proposal would operate on a concurrent rather than a consecutive basis. For example, if the offeror increases the consideration offered on business day 3 of the tender offer, the ten business day requirement of proposed Rule 14e-1(b) would expire during the thirty business day period of proposed Rule 14e-1(a) and would not result in requiring the offer to be extended.

The minimum periods of proposed Rules 14e-1(a) and (b) are related to the minimum withdrawal periods provided in proposed Rule 14d-7(a). While the Commission believes that the length of these minimum periods is appropriate for the protection of investors, specific comment is requested as to whether the time periods of these proposals aught to be longer or shorter and, if so, what periods should be adopted and the reasons therefor.

Proposed Rule 14e-1(c) would require a person making a tender offer to pay the offered consideration or return the stock certificates deposited by or on behalf of security holders as soon as reasonably practicable after the termination of the tender offer. The offeror would be under an obligation to use good faith and all reasonable efforts to promptly pay for or return the securities which would be determined in light of the factors discussed below and the practices of the financial community. The Commission recognizes that the operation of this standard will be affected by: current settlement, handling and delivery procedures relating to tenders made by guaranteed deliveries by appropriate institutions; procedures to cure technical defects in tenders; and the application of the Hart-Scott-Rodino Antitrust Improvements Act of 1976 [102] and the rules promulgated thereunder.[103] While the proposal does not contain a specific time period for compliance, the Commission requests specific comment on the necessity for such a period and the numbers of business days which such a period might provide.

The Commission believes that this provision would protect investors by ensuring that deposited securities are not tied up for an unreasonable length of time and would not unduly burden either the offeror or its depository in their operations after the termination of a tender offer offer.[104]

Finally, proposed Rule 14e-1(d) would require any person making a tender offer to issue a press release or similar public announcement promptly, but in no event later than one business day before the expiration date of such tender offer, whenever the length of the offer is extended. The announcement would be required to include a statement of the approximate number of securities deposited up to the date of such notice. The provision is intended to avoid the possibility of fraudulent, deceptive or manipulative acts or practices by requiring prompt and widespread communication of certain minimum information when a tender is extended.

PROPOSED RULE 14e-2: TRADING IN SUBJECT COMPANY SECURITIES PRIOR TO THE BIDDER'S PUBLIC ANNOUNCEMENT OF THE INTENTION TO MAKE A TENDER OFFER [17 CFR 240.14e-2]

In the Senate and House Hearings on the legislation which became the Williams Act, extensive testimony was taken concerning the adverse effects on the marketplace of leaks and rumors of impending tender offers.[105] While the testimony in these hearings focused on the relationship of leaks to a proposal for a pre-commencement filing requirement by a bidder with the Commission,[106] it highlighted the market disruption problems and abusive practices associated with the leaks of the intention of a bidder to make a tender offer. As Senator Bennett stated;

> I am more concerned with the situation which makes it possible for insiders to take advantage of their knowledge that the pending offer is coming and therefore get a quick profit by buying stock with the sure knowledge that they are going to have a market for it * * *.[107]

In describing the then current practice, a Vice President of the New York Stock Exchange stated that:

> Currently, to insure secrecy and avoid leaks and rumors * * * tender offers are normally made to stockholders immediately after a decision to make the offer is reached and a price has been determined. In spite of all precautions, there have been cases where tender offers have been preceded by leaks and rumors which caused abnormal market problems.[108]

Since the passage of the Williams Act in 1968, tender offer practice appears to have changed from that described above. The formulation of an intention to make a tender offer for a subject company's securities often is made long in advance of the commencement of the offer. Consequently, the probability of leaks of the bidder's intention is increased.[109]

In some instances, the leaking of the intention to make a tender offer may be deliberate. The Commission's Insti-

[100] 1967 Senate Hearings at 19.

[101] 1967 Senate Report at 3; 1968 House Report at 4.

[102] 15 U.S.C. 18a.

[103] See Release by Federal Trade Commission announcing promulgation of final rules re: Premerger Notification; Reporting and Waiting Period Requirements (July 31, 1978) (43 FR 33450).

[104] A memorandum from the Division of Corporation Finance which was submitted to the Senate Committee considering the Williams Act amendment pursuant to the request of Senator Williams to then Chairman Budge for examples of how the Commission proposed to implement the grant rulemaking authority under Section 14(e) identified one area to be addressed by the rulemaking authority as the situation in which

> [T]he person who makes a tender offer may fail (a) to pay for securities purchased, or (b) to return to their owner's securities not purchased promptly upon the termination of the tender offer in accordance with the practices of the financial community for settlement of transactions, usually within five days.

1970 Senate Hearings at 11-12.

[105] See, e.g., 1967 Senate Hearings at 69 et passim and 1967 House Hearings at 43 et passim.

[106] Section 2(2) of S. 510, as originally introduced in the Senate on January 18, 1967, contained a five day advance filing requirement with the Commission for any person making a tender offer for securities of a class subject to that subsection. 1967 Senate Hearings at 7. The pre-commencement filing requirement was not included in the legislation as passed. See 1967 Senate Report at 4.

[107] 1967 Senate Hearings at 74.

[108] Id. at 72.

[109] See, *e.g.*, A. F. Ehrbar, "Corporate Tender Offers Are Here to Stay," Fortune 91, 92 (May 8, 1978); Forbes 69 (February 5, 1979).

tutional Investor Study [110] found that bidders frequently gave institutions advance notice in either general or specific terms of proposed tender offers.[111] Whether deliberate or not, the leaking of the bidder's intention to make a tender offer when coupled with trading on such non-public market information [112] is a matter of serious concern to the Commission. Not only does this practice create disparities in market information and market disruption,[113] but it undermines the purposes of the Williams Act. Security holders who sell to persons with such material, non-public information are disadvantaged. Thus, investors who do not know of the bidder's intention to make a tender offer and who sell the subject company's securities shortly before the commencement of such offer are effectively denied the benefits of disclosure and the substantive protections provided by the Williams Act. If furnished with such information, these shareholders would be able to make an informed investment decision, which may involve deferring the sale of the securities until the commencement of the tender offer. On the other hand, the persons trading on such non-public information, who are usually short term investors, receive all the protections of the Williams Act. Moreover, leaks may lead to the same "stampede effect"[114] which the Williams Act was designed to avert in the context of tender offers.

Additionally, bidders who have determined to make a tender offer often purchase subject company securities shortly before the commencement of the tender offer. Such purchases are an abuse of the tender offer process envisioned by the Williams Act and pose problems similar to those created by trading by persons who have been "tipped" to the imminence of a tender offer. These pre-commencement purchases by a bidder are to be contrasted with those designed to "test the market" of the subject company securities those other purchases made before the intention to make a tender offer is formed during the period in which a tender offer may be one of several alternatives being considered by the acquiring person. Because of the uncertainty that a tender offer will occur, purchases at this point do not present the same problems or abuses.

In the past, Section 10(b) of the Exchange Act and the rules thereunder have provided the basis for judicial consideration of the issue of trading by persons in possession of the bidder's non-public intention to make a tender offer.[115]

In "U.S. v. Chiarella,"[116] An employee of a financial printer was able to deduce the names of subject companies from the tender offer materials being prepared by the printer and to convert such confidential information to his personal use. After obtaining the name of the subject company, the employee purchased subject company securities prior to the commencement of the tender offer and then sold the securities into the market when the tender offer was publicly announced. The employee made no disclosure of his knowledge of the tender offer in connection with the purchase or the sale of the securities. In affirming a criminal conviction of the employee under Section 10(b) and Rule 10b-5, the Second Circuit stated that:

> *Anyone*—corporate insider or not—who regularly receives material non-public information may not use that information to trade in securities without incurring an affirmative duty to disclose, and if he cannot disclose, he must abstain from buying or selling. [117]

While deciding that a "market insider" who has regular access to market information has a duty to disclose, the Chiarella court did not extend its holding to include pre-offer market purchases by a bidder. However, the court's interpretation of Section 10(b) did not involve Section 14(e) of the Exchange Act and was made in the absence of an applicable rule under the Williams Act.

Proposed Rule 14e-2 would address the issue of purchases of subject company securities by any person, including a bidder, on the basis of material, non-public information—the undisclosed intention of the bidder to make a tender offer for the subject company's securities. The proposal is primarily predicated on Section 14(e) which grants the Commission authority to define and prescribe means reasonably designed to prevent fraudulent, deceptive or manipulative acts and practices in connection with any tender offer.[118] This rulemaking authority was granted to the Commission by the 1970 Williams Act amendments. In his introductory remarks at the Senate hearings Senator Williams described the amendment to Section 14(e) as giving

> the Commission rulemaking power with respect to fradulent, deceptive and manipulative activities used in tender offers. The techniques currently being used in these offers have become increasingly sophisticated and they change rapidly. * * * The bill before us would add to the Commission's rulemaking power and enable it to deal promptly and with flexibility with this rapidly changing problem.[119]

During his testimony at the Senate hearings, then Chairman Budge was asked by Senator Williams to give the committee "some examples of fraudulent, deceptive or manipulative practices used in tender offers which the proposed Commission rulemaking powers would prevent."[120] In response to this specific request, a memorandum from the Commission's Division of Corporation Finance was submitted for the record. Among the "problem areas" enumerated by this memorandum which the staff proposed to deal with by the rulemaking authority under Section 14(e), as amended, was the situation in which

> [T]he person who has become aware that a tender offer is to be made, or has reason to believe that such bid will be made, may fail to disclose material facts with respect thereto to persons who sell him securities for which the tender bid is to be made.[121]

---

[110] Institutional Investor Study Report, H.R. Doc. No. 92-64, 92d Cong., 1st Sess. 1971.

[111] Id. at 2773, 2828-29, 2832-33. Among the reasons given for this practice was that, if the institution established a position in the subject company's securities, the bidder could expect to purchase such securities pursuant to the forthcoming tender offer. Id. at 2830.

[112] The term "market information" has been described as information that affects the price of a company's securities without affecting the firm's earning power or assets. "U.S. v. Chiarella" CCH Fed. Sec. L. Rep. ¶ 96,608 (2d Cir. 1978), which is discussed infra.

[113] Such purchases may create an artificial demand for the subject company's stock resulting in a distortive effect on the free play of market forces envisioned by the securities laws. Id. at 406.

[114] "Rondeau v. Mosinee Paper Co." 422 U.S. 49, 58 at n. 8 (1975).

[115] See, e.g., "SEC v. Sorg Printing Co." [1974-1975 Transfer Binder] CCH Fed. Sec. L. Rep. ¶ 95,034 (S.D.N.Y. 1975).

[116] CCH Fed. Sec. L. Rep. ¶ 96,608 (2d Cir. 1978).

[117] Id. at 94,600 (emphasis in original).

[118] The fact that the tender offer would not have commenced at the time of the purchases which are the subject of proposed Rule 14e-2 does not prohibit their regulation "in connection with" a tender offer. See, e.g., Applied Digital Data Systems, Inc. v. Milgo Electric Corp. 425 F. Supp. 1145 S.D.N.Y. 1977); ICM Realty v. Cabot, Cabot & Forbes Land Trust, [197301974 Transfer Binder] CCH Fed. Sec. L. Rep. ¶ 94,585 (S.D.N.Y.).

[119] 1970 Senate Hearings at 2.

[120] Id. at 11.

[121] Id. at 12. This example was described by a commentator shortly after the passage of the 1970 Williams Act amendments as follows:

First, it indicates that the staff believes that Section 14(e) * * * gives the SEC power to regulate acts prior to the commencement of a tender offer as long as a tender offer is planned * * *. Second, it indicates the view of the staff that a person may not legally purchase or sell securities if he fails to disclose to the other party to the transaction material nonpublic information known to him but not known to the other party, whether or not such information comes from the issuer of the securities * * *. More specifically, the example takes the view, not shared to date by the commentators, that a person who plans to make a tender offer may not buy stock in the target company after he has formulated his intention, even if disclosure would not yet be required

Footnotes continued on next page

It should be noted that the word "person" in the memorandum furnished to the committee did not specify that it was limited to persons other than the bidder.

Proposed Rule 14e-2 is designed to address the problem identified by the Commission staff memorandum in the 1970 Senate Hearings in a manner similar to that described therein. Proposed Rule 14e-2(a) would apply to any person who purchases subject company securities on the basis of non-public information received directly or indirectly from a bidder that enables the person to known or to reasonaby believe that the bidder will make a tender offer for the subject company's securities. Any purchase of subject company securities by a person in receipt of such material non-public information would be proscribed unless prior to the purchase, the person publicly announced the information received and its source.

While not applying to a bidder, proposed Rule 14e-2(a) would affirm a duty of dislcosure on any other person who trades on non-public material information obtained directly from a bidder or indirectly from a bidder such as from persons involved or consulted by the bidder in the pre-commencement planning and preparation stages of a tender offer.[122] Trading by such persons in the absence of appropriate disclosure poses the same problems of market disruption and detriment to the interests of investors as trading by persons who regularly receive market information. The Commission believes that an affirmative duty of disclosure is necessary for the protection of investors because of past abuses, the vital importance of such market information and the extraordinary nature of tender offers. Since no duty to disclose would arise if the person with such knowledge or reasonable believe refrains from trading in subject company securities, the proposal would establish a "disclose or abstain from trading" rule under Section 14(e). Although a person subject to the proposal would be permitted to purchase subject company securities after the public announcement, the Commission does not believe that compliance with proposed Rule 14e-2(a) would be a defense for a breach of any duty owed by such person to the bidder.

As a means reasonably designed to prevent the fraudulent, deceptive or manipulative act or practice proscribed by proposed Rule 14e-2(a), proposed Rule 14e-2(b) would required a bidder who knows or has reason to believe that a person has violated, is violating or is about to violate proposed Rule 14e-2(a) to promptly make a public announcement of appropriate information with respect to the bidder's tender offer for subject company securities. This proposal would provide a reasonable assurance that in the event of violations of proposed Rule 14e-2(a) the marketplace and investors are promptly alerted by the bidder. Since a bidder has a special interest in policing the confidentiality of its tender offer and is in a position to become aware of trading on such information, the establishment of a public announcement procedure is a reasonable means to prevent fraudulent, deceptive or manipulative acts or practices.

As envisioned by the 1970 staff memorandum, discussed above, proposed Rule 14e-2(c) would apply to a bidder which purchases subject company securities after a determination to make a tender offer has been made but not yet publicly announced. Under this proposal, the purchase of subject company securities by a bidder which has determined to make a tender offer but has not publicly announced its intention to do so would be proscribed unless prior to any such purchase the bidder makes a public announcement of certain information. Depending on the disclosure made by the bidder, the proposal would not prohibit trading by a bidder which has determined to make a tender offer.

Proposed Rule 14e-2(c)(2) sets forth the infomation which may be included in such a public announcement. Disclosure of the information contained in proposed Rule 14e-2(c)(2)(i) through (iii) would not constitute the commencement of the tender offer under proposed Rule 14d-6 and would not be deemed under present staff interpretations[123] to trigger the application of Rule 10b-13 [17 CFR 240.10b-13]. However, disclosure by the bidder of the information in proposed Rule 14e-2(c)(iv) and (v) would trigger the operation of both proposed Rule 14d-6 and Rule 10b-13.

The provisions of proposed Rule 14e-2(c) would necessarily depend on whether the bidder has determined to make a tender offer. As stated by then Chairman Cohen in the 1967 Senate hearings:

> Tender offers are not conceived overnight. They are important transactions, involving huge sums of money and calling for careful planning as well as a thorough analysis of the company proposed to be acquired.[124]

The Commission believes that a bidder's determination to make a tender offer may be discerned from the facts and circumstances involved. Relevant factors include, but are not limited to, a resolution by the bidder's board of directors relating to the tender offer; the formulation of the intention to make a tender offer by the bidder or the person(s) acting on behalf of the bidder; or activities wich substantially facilitate the tender offer such as: a plan to make a tender offer for a specific subject company's securities; arranging financing for a tender offer; preparing or directing or authorizing the preparation of tender offer materials; and authorizing negotiations, negotiating and entering into agreements with any person to act as a dealer, manager, soliciting dealer, forwarding agent or depository in connection with the tender offer.

If neither proposed Rule 14e-2(a) or (b) are applicable, proposed Rule 14e-2(c) would permit a bidder to purchase subject company securities until a determination is made to make a tender offer. Thus, the bidder would be permitted to "test the market" by purchasing subject company securities as long as no determination is made to make the tender offer.[125] Because of the bidder's position in the tender offer process, it is in the best position to know from the facts and circumstances involved whether such a determination has been made.

In light of the above discussion, the Commission recognizes that proposed Rule 14e-2 would affirm a specific duty of disclosure. Moreover, while the proposal, if adopted, may alter present tender offer practice, the Commission believes that the proposal is necessary for the protection of investors and for the implementation of the remedial purposes of the Williams Act. In the Commission's view, any ad-

---

Footnotes continued from last page

under Section 13(d) or Section 14(d). (footnotes omitted)

Brown, The Scope of the Williams Act and Its 1970 Amendments, 26 Bus. Law. 1637, 1747-48 (1971).

[122] Such persons would include, but not be limited to, the following:

(1) The directors of the bidder;

(2) Executive officers and employees of the bidder who are directly involved in the planning, preparation or execution of the bidder's tender offer;

(3) The independent accountant(s) retained by the bidder;

(4) The bidder's banker(s), including investment banker(s);

(5) Any dealer, manager, soliciting agent, depository, public relations firm, financial printer, shareholder communications or advertising firm employed by the bidder with respect to the tender offer;

(6) Legal counsel retained by any of the foregoing to render advice in connection with the tender offer; and

(7) Secretarial and other clerical or administrative personnel employed by any of the foregoing who become aware of the tender offer.

It should be noted that persons such as those listed above would be subject to proposed Rule 14e-2(a). Such persons may receive the non-public material information directly from the bidder or from another person enumerated above.

[123] See, *e.g.*, Letter to James M. Edwards, Esq. from the Division of Market Regulation re: National Starch and Chemical Holding Corporation (June 14, 1978); Letter to Stanford O. Bardwell, Jr., Esq. from the Division of Market Regulation, re: Guaranty Income Life Insurance Company (January 30, 1976); and letter to Gerald S. Blackman, Esq. from the Division of Market Regulation re: Jewelcor Incorporated (September 11, 1974).

[124] 1967 Senate hearings at 185.

[125] Such acquisitions, however, may be subject to the disclosure requirements of Section 13(d) of the Exchange Act and the rules promulgated thereunder.

ditional burden imposed by the proposal would be outweighed by the benefits to shareholders and is therefore justified. The proposal is published for comment pursuant to the Commission's rulemaking authority under Sections 14(e) and 23(a) of the Exchange Act.

GENERAL AND SPECIFIC INQUIRIES

A. ISSUE RELATING TO SUBJECT COMPANIES

The Commission is requesting specific comment on whether a rule should be adopted under the Williams Act which would require subject company management to disclose to security holders that: (1) the subject company recommends acceptance or rejection of a tender offer; (2) the subject company is expressing no opinion and is remaining neutral toward the tender offer; or (3) the subject company is unable to take a position with respect to the tender offer.[126] If the subject company's position changed during the tender offer, timely disclosure of such change would also be required. Comment is also requested as to the appropriateness of specifying this obligation by rule under Section 14(d)(4) and/or Section 14(e) of the Williams Act.[127]

B. OTHER INQUIRES

In addition to the above and the issues raised by the proposals, the Commission requests written comment on the following: (1) Whether the costs imposed on bidders, subject companies and/or others by these proposals outweigh their benefits to investors and the public interest; and (2) Whether any proposed rule or the proposed schedule, if adopted, would have an adverse effect on competition or would impose a burden on competition which is neither necessary nor appropriate in furthering the purposes of the Exchange Act. Comments on this inquiry should include, to the extent feasible, detailed empirical and evidentiary material in support of any conclusions, opinions or positions. Comments on this inquiry will be considered by the Commission in complying with its responsibilities under Section 23(a)(2) of the Exchange Act.

In addressing the issues raised and the proposals published in this release, commentators should feel free to consider the materials accumulated in Commission File No. S7-649. The text of proposed Regulations 14D and 14E follows:

TEXT OF PROPOSALS

The text of the proposals is set forth below:

* * * * *

I. Section 230.434b of 17 CFR Part 230 is proposed to be amended to read as follows:

§ 230.434b Additional information required to be included in prospectuses relating to tender offers.

Notwithstanding the provisions of any form for the registration of securites under the Act, any prospectus relating to securities to be offered in connection with a tender offer for, or a request or invitation for tenders of, securities which is subject to section 14(d) of the Securites Exchange Act of 1934 shall include all of the information, not otherwise required to be included therein, required by § 240.14d-3(b) of this chapter to be included in all such tender offers, requests or invitations, published, sent or given to the holders of such securities.

II. Section 240.13d-101 of 17 CFR Part 240 is proposed to be amended by revising Instruction B to read as follows:

§ 240.13d-101 Sechedule 13D—Information to be included in statements filed pursuant to § 240.13d-1(a) and amendments thereto filed pursuant to § 240.13d-2(a).

* * * * *

*Instructions.* A. * * *

B. Information contained in exhibits to the statement may be incorporated by reference in answer or partial answer to any item or sub-item of the statement unless it would render such answer misleading, incomplete, unclear or confusing. Material incorporated by reference shall be clearly identified in the reference by page, paragraph, caption or otherwise. An express statement that the specified matter is incorporated by reference shall be made at the particular place in the statement where the information is required. A copy of any information or a copy of the pertinent pages of a document containing such information which is incorporated by reference shall be submitted with this statement as an exhibit and shall be deemed to be filed with the Commission for all purposes of the Act.

* * * * *

III. Sections 240.14d-1 through 240.14d-101 (Regulation 14D) of 17 CFR Part 240 are proposed to be amended as follow:

NOTE: Regulations 14D (§§ 240.14d-1 through 240.14d-101) and 14E (§§ 240.14e-1 and 14e-2) provide comprehensive substantive, procedural and disclosure rules under sections 14 (d) and (e) of the Act applicable to the conduct of tender offers. The Regulations is intended to provide guidance to persons making or subject to tender offers; to reduce uncertainty to the extent feasible; to permanently adopt certain provisions previously adopted as temporary, emergency rules; to codify certain administrative practices and judicial decisions interpreting Sections 14(d) and (e) of the Act and the rules and regulations thereunder; to achieve a more even and balanced application of the law relating to tender offers by bidders and to subject companies whose securities are the subject of tender offers; and to accomplish these objectives in a manner consistent with the basic purposes of the Act—protection of investors and the public interest.

Regulation 14D (§§ 240.14d-1 through 240.14d-101) defines certain relevant terms (Rule 14d-1 (§ 240.14d-1)). The term "tender offer" is not defined since the dynamic nature of tender offers requires administrative and judicial flexibility in determining what types of transactions should be subject to the Act and these Regulations. It is clear that the term is not limited to so-called "conventional tender offers." The Regulation also establishes disclosure, substantive and procedural rules for filing and delivery of tender offer statements (Rule 14d-2 (§ 240.14d-2) and Schedule 14D-1 (§ 240.14d-101)); for disclosure requirements with respect to tender offers (Rule 14d-3 (§ 240.14d-3)); for non-exclusive methods of disseminating cash tender offers, i.e., long form publication, summary publication and the use of stockholder lists and security position listings (Rule 14d-4 (§ 240.14d-4) and 14d-5 (§ 240.14d-5)); and for identifying the date of a tender offer (Rules 14d-6 (§ 240.14d-6)). In addition, the Regulation provides for additional withdrawal rights (Rule 14d-7 (§ 240.14d-7)); for integration of certain post-termination purchases of securities of the subject company with the tender offer for purposes of the "best price" provisions of Section 14(d)(7) of the Act (Rule 14d-8); and exempts certain acquisitions from the limited pro rata provisions of section 14(d)(6) of the Act (Rule 14d-9 (§ 240.14d-9)); and for the solicitations or recommendations of certain persons in connection with tender offers (Rule 14d-10 (§ 240.14d-10) and Schedule 14D-10 (§ 240.14d-101)).

Regulation 14E (§§ 240.14e-1 and 14e-2) prescribes means reasonably designed to prevent fraudulent, manipulative or decep-

[126] Commentators have expressed divergent views on this matter. Those suggesting that management should be required to make a recommendation include: Fleisher and Mundheim, Corporate Acquisitions by Tender Offer, 119, U. Pa. L. Rev. 317, 354, (1967); Swanson, S. 510 and the Regulation of Cash Tender Offers, 5 Harv. J. Legis. 431, 505 (1968); Brudney, A Note on Takeover Bids and Corporate Purchases of Stock, 22 Bus. Law 611 (1963); and Krasik, Tender Offers: The Target Company's Duty of Disclosure, 25 Bus. Law. 455, 473-475 (1969). Those opposed to requiring a recommendation include, Comment, A Proposal for Affirmative Disclosure by Target Management During Tender Offers, 75 Col. L. Rev. 190, 217 (1975); Aranow and Einhorn, Tender Offers for Corporate Control, 219 (1973).

[127] The Memorandum of the Division of Corporation Finance submitted to Congress pursuant to Senator Williams' request during the 1970 Senate Hearings on the amendment to Section 14(e), which granted the Commission rulemaking authority under that sub-section, identified certain problem areas which could be dealt with by such rulemaking power. Among the items listed was:

6. Management of the target company in a tender offer may omit to make timely disclosure of its position in favor of or in opposition to such bids or change in such position.

1970 Senate Hearings at 12.

tive acts or practices in connection with a tender offer, including that any tender offer remain open for at least thirty business days and in the event of an increase in the consideraion offered or the dealer's soliciting fee that the offer remain open for ten business days from the date of notice of such increase (Rule 14e-1 (§ 240.14e-1)); and proscribes purchases of the securities of the subject company by certain persons, including a bidder, prior to the public announcement of the bidder's intention to make a tender offer for such securities (Rule 14e-2 (§ 240.14e-2)).

Tender offers by issuers for securities issued by them are not subject to Regulation 14D. Tender offers by affiliates of such issuers for such securities are subject to this Regulation. Any tender offer is subject to Rule 14e-1.

REGULATION 14D

§ 240.14d-1 Definitions.

Unless the context otherwise requires, all terms used in Regulation 14D (§§ 240.14d-1 through 240.14d-101) or Regulation 14E(§§ 240.14d-1 through 240.14d-101) and Regulation 14E (§§ 240.14e-1 and 240.14e-2) have the same meaning as in the Act and in Rule 12b-2 (§ 240.12b-2) promulgated thereunder. In addition, the following definitions apply:

(a) The term "bidder" means any person who makes a tender offer or on whose behalf a tender offer is made: *Provided, however,* That the term does not include an issuer which makes a tender offer for securities of any class of which it is the issuer: *And provided further,* That: with respect to Rule 14e-2, the term includes a person, other than the issuer, who proposes to make a tender offer.

(b) The term "subject company" means any issuer of securities which are sought by a bidder pursuant to a tender offer;

(c) The term "security holders" includes holders of record and beneficial owners of securities which are the subject of a tender offer.

(d) The term "beneficial owner" shall have the same meaning as that set forth in Rule 14d-3 (§ 240.13d-3);

(e) The term "tender offer material" includes, but is not limited to:

(1) The bidder's formal offer, including all the material terms and conditions of the tender offer and all amendments thereto.

(2) The related transmittal letter (whereby securities of the subject company which are sought in the tender offer may be transmited to the bidder or its depositary) and all amendments thereto; and

(3) Press releases, advertisements, shareholder letters and other documents published, sent or given by the bidder to security holders which, directly or indirectly, solicit, invite or request tenders of securities being sought in the tender offer;

(f) The term "executive officer" means the president, secretary, treasurer, any vice president in charge of a principal business unit,. division or function (such as sales, administration or finance) or any other person who performs similar policy making functions for a corporation;

(g) The term "business day" means any day, other than Saturday, Sunday or a federal holiday, on which the principal office of the Commission at Washington, D.C. is scheduled to be open for business, and shall consist of the time period from 12:00 a.m. through 11:59 p.m. In computing any time period under section 14(d)(5) or section 14(d)(6) of the Act or under Regulation 14D (§§ 240.14e-1 and 14e-2), the date a tender offer is first published, sent or given to security holders shall be included and such period shall begin to run from the first business day that such offer is first published, sent or given to security holders; and

(h) The term "security position listing" shall have the same meaning as that set forth in Rule 17Ad-8 (§ 240.17Ad-8).

§ 240.14d-2 Filing and delivery of tender offer statement.

(a) No bidder shall make a tender offer for any class of securities referred to in section 14(d)(1) of the Act if, after consummation thereof, such bidder would be the beneficial owner of more than 5 per centum of such class of the subject company's securities, unless as soon as practicable on the date of the commencement of the tender offer such bidder:

(1) Files with the Commission ten copies of a Tender Offer Statement on Schedule 14D-1 (§ 240.14d-100) (which shall consist of eight copies including all exhibits, and two copies including only exhibits described in Item 11(a) of Schedule 14D-1);

(2) Hand delivers a copy of such Schedule 14D-1 (§ 240.14d-100), including all exhibits thereto:

(i) To the subject company at its principal executive office;

(ii) To any other bidder at its principal executive office or at the address of the person authorized to receive notices and communications (which is disclosed on the cover sheet of such other bidder's Schedule 14D-1 (§ 240.14d-100)), *provided that* such other bidder has filed a Schedule 14D-1 (§ 240.14d-100) with the Commission and is making a tender offer which has not yet terminated for the same class of securities of the subject company;

(iii) To any national securities exchange where such class of the subject company's securities is registered and listed for trading (which may be based upon information contained in the subject company's most recent Annual Report on Form 10-K (§ 249.310) filed with the Commission unless the bidder has reason to believe that such information is not current) which delivery shall be made when practicable prior to the opening of any such exchange; and

(iv) To the National Association of Securities Dealers, Inc. ("NASD") if such class of the subject company's securities is authorized for quotation in the NASDAQ interdealer quotation system.

(b) If any material change occurs in the information set forth in the Schedule 14D-1 (§ 240.14d-100) required by this section, the bidder shall file with the Commission ten copies of an amendment to Schedule 14D-1 (which shall consist of eight copies including all exhibits and two copies including only exhibits described in Item 11(a) of Schedule 14D-1) disclosing such change and shall deliver a copy of such amendment to the subject company and to any exchange and/or the NASD, as required by paragraph (a) of this section, promptly but not later than the date such change is first published, sent or given to security holders: *Provided, however,* That the bidder may file with the Commission and deliver to the subject company, any exchange and/or the NASD, as required by paragraph (a) of this section, an amendment to Schedule 14D-1 which only discloses the number of shares deposited to date and/or announces an extension of time for depositing securities pursuant to the tender offer, promptly after the date such limited tender offer material is first published, sent or given to security holders.

(c) The bidder shall file with the Commission ten copies of any additional tender offer material as an exhibit to Schedule 14D-1 (§ 240.14d-100) and shall deliver a copy of such additional tender offer material to the subject company, any exchange and/or the NASD, as required by paragraph (a) of this section, promptly but not later than the date such additional tender offer material is first published, sent or given to security holders, except as otherwise permitted by the proviso in paragraph (b) of this section.

§ 240.14d-3 Disclosure requirements with respect to tender offers.

(a)(1) *Long-Form Publication*: If a tender offer subject to section 14(d)(1) of the Act is published, sent or given to security holders by means of long-form publication pursuant to Rule 14d-4(a)(1) (§ 240.14d-4(a)(1)), such long-form publication shall include the information required by paragraph (b)(1) of this section.

(2) *Summary Publication*: If a tender offer subject to section 14(d)(1) of the Act is published, sent or given to security holders by means of summary publication pursuant to Rule 14d-4(a)(2) (§ 240.14d-4(a)(2)),

(i) The summary advertisement shall include the information required by paragraph (b)(2) of this section; and

(ii) The tender offer materials furnished by the bidder upon the request of any security holder shall include the information required by paragraph (b)(1) of this section.

(3) *Use of Stockholder Lists*: If a tender offer subject to section 14(d)(1) of the Act is published, sent or given to security holders by the use of stockholder lists and security position listings pursuant to Rule 14d-4(a)(3) (§ 240.14d-4(a)(3)),

(i) The summary advertisement shall include the information required by paragraph (b)(2) of this section; and

(ii) The tender offer materials transmitted to security holders pursuant to such lists and the summary advertisement shall include the information required by paragraph (b)(1) of this section.

(4) *Other tender Offers*: If a tender offer subject to section 14(d)(1) of the Act is published, sent or given to security holders other than pursuant to Rule 14d-4(a) (§ 240.14d-4(a)),

(i) The tender offer materials published, sent or given to security holders on the date of commencement of such offer shall include the information required by paragraph (b)(1) of this section; and

(ii) A material change in the information published, sent or given to security holders shall be disseminated to security holders in additional tender offer material.

(b)(1) The information required to be disclosed by paragraphs (a)(1), (a)(2)(ii), (a)(3)(ii) and (a)(4) of this section shall include the following:

(i) The identity of the bidder;

(ii) The identity of the subject company;

(iii) The amount and class of securities being sought and the type and amount of consideration being offered therefor;

(iv) The scheduled expiration date of the tender offer, whether the tender offer is extendible and, if so, the terms/conditions for extension of the tender offer;

(v) The exact dates prior to which, and after which, persons who deposit their securities will have the right to withdraw their securities pursuant to section 14(d)(5) of the Act and Rule 14d-7 (§ 240.14d-7) and the manner in which shares will be accepted for payment and in which withdrawal may be effected;

(vi) If the tender offer is for less than all the outstanding securities of a class of equity securities and the bidder is not obligated to purchase all of the securities tendered, the dates of the period during which the securities will be taken up pro rata pursuant to Section 14(d)(6) of the Act or Rule 14d-9 (§ 240.14d-9) and the present intention or plan of the bidder with respect to the tender offer in the event of an oversubscription by security holders; and

(vii) The disclosure required by Items 1(c); 2; 3; 4; 5; 6; 7; 8; 9; and 10 of Schedule 14D-1 (§ 240.14d-100) or a fair and adequate summary thereof,

*Instructions.* 1. Negative responses to any such item or sub-item of Schedule 14D-1 (§ 240.14d-100) need not be included in the information published, sent or given to security holders.

2. Although the financial statements necessary to present a fair and adequate summary of Item 9 of Schedule 14D-1 (§ 240.14d-100) may vary depending on the facts and circumstances involved, summary financial information equivalent to that required by paragraph e of Guide 59 of the Guides of Preparation and Filing of Registration Statements will normally be sufficient summary disclosure of Item 9 for purposes of paragraph (b)(1)(vii) of this section. If the information required by Item 9 is summarized, appropriate instructions should be included stating how more complete financial information an be obtained.

(2) The information required to be disclosed by paragraphs (a)(2)(i) and (a)(3)(i) of this section in a summary advertisement shall be limited to the following:

*Explanatory Note:* Neither the initial summary advertisement nor any subsequent summary advertisement shall include a transmittal letter (whereby securities of the subject company which are sought in the tender offer may be transmitted to the bidder or its depositary) or any amendment thereto.

(i) The information required by paragraph (b)(1)(i) through (vi) of this section;

(ii) A brief description of the purpose of the tender offer;

(iii) A statement that the information required by paragraph (b)(1)(vii) of this section is incorporated by reference into the summary advertisement;

(iv) Appropriate instructions for record holders and beneficial owners of securities of the class being sought regarding how to obtain promptly, at the bidder's expense, the bidder's tender offer materials; and

(v) In a tender offer published, sent or given to security holders by the use of stockholder lists and security position listings pursuant to Rule 14d-4(a)(3) (§ 240.14d-4(a)(a)(3)), a statement that the tender offer materials are contemporaneously being mailed to record holders and are contemporaneously being furnished to brokers, banks and similar persons whose name appears or whose nominee appears on the list of stockholders or, if applicable, who are listed as participants in a clearing agency's security position listing for subsequent transmittal to beneficial owners of such securities.

(c) (1) Other than a summary advertisement described in paragraph (c)(2) of this section, any additional tender offer material, subsequent to the initial solicitation, invitation or request of tenders, shall contain the information required by paragraph (b)(1) of this section: *Provided, however,* That such additional tender offer material may omit any of the information required by paragraph (b)(1)(vii) previously furnished to security holders by the bidder in connection with the tender offer.

(2) A summary advertisement published, sent or given to security holders subsequent to the initial summary advertisement shall contain:

(i) The information required by paragraph (b)(2) of this section; and

(ii) Disclosure of any material change in the tender offer materials or a fair and adequate summary thereof which has not been previously disclosed in a summary advertisement.

**§ 240.14d-4 Dissemination of cash tender offers.**

(a) A tender offer subject to section 14(d)(1) of the Act in which the consideration consists solely of cash shall be deemed to be "published, sent or given to security holder," if the bidder complies with any one of the following sub-paragraphs. Depending on the facts and circumstances involved, adequate publication of a tender offer or a summary advertisement of a tender offer pursuant to this section may require publication in a newspaper with a national circulation or may only require publication in a newspaper with metropolitan or regional circulation or may require publication in a combination thereof.

(1) *Long-Form Publication:* By making adequate publication in a newspaper or newspapers of the tender offer.

(2) *Summary Publication:*

(i) By making adequate publication in a newspaper or newspapers of a summary advertisement of the tender offer; and

(ii) By mailing or otherwise furnishing with reasonable promptness the bidder's tender offer materials to any security holder who requests such tender offer materials pursuant to the summary advertisement or otherwise.

(3) *Use of Stockholder Lists and Security Position Listings:*

(i) If the subject company elects to comply with Rule 14d-5(b), (§ 240.14d-5(b)),

(A) By delivering a sufficient number of sets of the tender offer materials to the subject company or its

principal transfer agent promptly after receipt of the notification of the subject company's election;

(B) By making adequate publication in a newspaper or newspapers of a summary advertisement of the tender offer at the approximate time of the commencement of the mailing and transmittal of tender offer materials by the subject company; and

(C) By mailing or otherwise furnishing with reasonable promptness the tender offer materials to any security holder who requests such tender offer materials pursuant to the summary advertisement or otherwise; or

(ii) If the subject company elects to comply with Rule 14d-5(c), (§ 240.14d-5(c))

(A) By mailing a copy of the bidder's tender offer materials to each person named on the list of stockholders obtained pursuant to Rule 14d-5(c);

(B) By contacting and making inquiry of each participant on any security position listing obtained pursuant to Rule 14d-5(c) as to the approximate number of beneficial owners of subject company securities; by transmitting a sufficient number of sets of tender offer materials to each participant named on the security position listing obtained pursuant to Rule 14d-5(c);

(C) By making adequate publication in a newspaper or newspapers of a summary advertisement of the tender offer at the approximate time of the commencement of the mailing and transmittal pursuant to the shareholder list and security position listings; and

(D) By mailing or otherwise furnishing with reasonable promptness the tender offer materials to any security holder who requests such tender offer materials pursuant to the summary advertisement or otherwise.

(b) (1) If a tender offer has been published, sent or given to security holders by one or more of the methods enumerated in paragraph (a) of this section, a material change in the information published, sent or given to security holders shall be disseminated to security holders by means of the same method or methods, *except that* if a material change in the information published, sent or given to security holders occurs within five business days of the expiration date of the tender offer, including any extension thereof, the bidder shall take reasonable steps to assure that such material change is disseminated by the same method or methods and shall also disseminate such material change by means of a press release.

(2) Except where otherwise provided in paragraph (b)(1) of this section, a material change in the information published, sent or given to security holders pursuant to either paragraph (a)(2) or (a)(3) of this section shall be disseminated to security holders:

(i) By publishing a summary advertisement containing such material change;

(ii) By mailing notice of such material change to any security holder who requested the bidder's tender offer material pursuant to the initial summary advertisement or otherwise; and

(iii) If stockholder and other lists were used pursuant to either paragraph (a)(3)(i) or paragraph (a)(3)(ii) of this section to publish, send or give the tender offer to security holders, by disseminating notice of such material change in a similar manner.

**§ 240.14d-5 Dissemination of certain tender offers by the use of stockholder lists and security position listing.**

(a) For the purpose of facilitating the dissemination of disclosure and of preventing fraudulent or deceptive acts in connection with certain tender offers, upon receipt by a subject company with a class of equity securities referred to in section 14(d)(1) of the Act at its principal executive offices of a bidder's written request, meeting the requirements of paragraph (f) of this section, for the use of stockholder lists and security position listings in disseminating the bidder's tender offer to security holders, the subject company shall:

(1) Promptly notify transfer agents and any other person, who will assist the subject company in complying with the requirements of this section, of the receipt by the subject company of a request by a bidder pursuant to this section;

(2) Promptly ascertain whether the current stockholder list, written or otherwise, within the access of the subject company was prepared as of a date earlier than ten business days before the date of the bidder's request and, if so, promptly prepare or cause to be prepared a stockholder list as of the most recent practicable date which shall not be earlier than ten business days before the date of the bidder's request;

(3) Elect to perform the acts described in either paragraph (b) or (c) of this section, which election shall not be revocable by the subject company during the bidder's tender offer and extensions thereof;

(4) Within one business day of the receipt of the bidder's request, deliver oral notification to the bidder, which notification shall be confirmed in writing, of the subject company's election, the approximate number of security holders of the class of securities being sought by the bidder and, if the subject elects to comply with paragraph (b) of this section, appropriate information concerning the location for delivery of the bidder's tender offer materials; and

(5) Pursuant to its election, comply with the provisions of either paragraph (b) or (c) of this section.

(b) A subject company, which elects to perform the acts prescribed by this paragraph pursuant to paragraph (a)(3) of this section, shall:

(1) Promptly contact each participant named on the most recent security position listing of any clearing agency within the access of the subject company and make inquiry of each such participant as to the approximate number of beneficial owners of subject company securities held by each such participant;

(2) Within four business days of receipt at the location specified by the subject company pursuant to paragraph (a)(4) of this section of the sets of the bidder's tender offer materials, mail or cause to be mailed a copy of the bidder's tender offer materials to each person whose name appears as a record holder of such class of securities on the most recent stockholder list referred to in paragraph (a)(2) of this section. The mailing shall be conducted in substantially the same manner as the subject company would conduct a mailing to security holders of its own materials relating to the tender offer;

(3) Within four business days of receipt at the location specified by the subject company pursuant to paragraph (a)(4) of this section of the sets of the bidder's tender offer materials, transmit or cause to be transmitted a sufficient number of sets of the bidder's tender offer materials to the participants named on the security position listings described in paragraph (b)(1) of this section. The transmittal shall be conducted in substantially the same manner as the subject company would conduct a transmittal to beneficial owners pursuant to security position listings of clearing agencies of its own material relating to the tender offer;

(4) Promptly give oral notification to the bidder, which notification shall be confirmed in writing, of the commencement of the mailing pursuant to paragraph (b)(2) of this section and of the transmittal pursuant to paragraph (b)(3) of this section;

(5) Update the stockholder list and promptly mail or cause to be mailed during the course of the tender offer a copy of the bidder's tender offer materials, to the extent sufficient sets of such materials have been furnished by the bidder, to each person who has become a record holder since the date or preparation of the most recent stockholder list referred to in paragraph (a)(2) of this section; and

(6) Promptly after receipt at the location specified by the subject compa-

ny pursuant to paragraph (a)(4) of this section of copies of an amendment to the bidder's tender offer materials; envelopes or other containers therefor, and either the estimated amount of postage or payment of such amount pursuant to paragraph (g)(1)(ii) of this section, mail or cause to be mailed a copy of such amendment to each record holder whose name appears on the shareholder list described in paragraphs (b)(2) and (b)(5) of this section and transmit or cause to be transmitted sufficient copies of such amendment to each participant named on security position listings who received sets of the bidder's tender offer materials pursuant to paragraph (b)(3) of this section; and

(7) Not include any communication other than the bidder's tender offer materials or amendments thereto in the envelopes or other containers furnished by the bidder.

(c) A subject company, which elects to perform the acts prescribed by this paragraph pursuant to paragraph (a)(3) of this section, shall:

(1) Within two business days of receipt of the bidder's request, furnish to the bidder at the subject company's principal executive office, a copy of the names and addresses of the record holders on the most recent stockholder list referred to in paragraph (a)(2) of this section and a copy of the names and addresses of participants identified on the most recent security position listing of any clearing agency which is within the access of the subject company; and

(2) Update the stockholder list by furnishing the bidder with the name and address of each record holder named on the stockholder list, and not previously furnished to the bidder, promptly after such information becomes available to the subject company during the course of the bidder's tender offer.

(d) (1) Neither the subject company nor any affiliate or agent of the company shall be deemed to be an "underwriter" within the meaning of Section (2)(11) of the Securities Act of 1933 for any purpose of that Act or any rule or regulation promulgated thereunder based solely upon the compliance by the subject company or any affiliate or agent of the subject company with one or more of the requirements of this section.

(2) Neither the subject company nor any affiliate or agent of the subject company shall be liable under any provision of the Federal securities laws for the disclosure in the bidder's tender offer materials, including any amendment thereto, based solely upon the compliance by the subject company or any affiliate or agent of the subject company with one or more of the requirements of this section.

(e) A subject company, which has received a request from a bidder pursuant to paragraph (a) of this section meeting the requirements of paragraph (f) of this section shall not conduct any separate mailing or similar communication to its security holders nor publish any newspaper or other advertisement relating to the bidder's tender offer unless the subject company has complied, pursuant to its election under paragraph (a)(2) of this section, either with the procedure specified in paragraphs (b)(2) and (b)(3) or with the procedure specified in paragraph (c)(1) of this section; *Provided, however,* That the provisions of this paragraph shall not prohibit a subject company from making a communication with its security holders pursuant to Rule 14d-10(e) at any time subsequent to the date of commencement of such bidder's tender offer as defined in Rule 14d-6, or the date of any public announcement by such bidder which contains at least the information specified in Rule 14d-6(d)(1) through (3).

(f) The bidder's written request referred to in paragraph (a) of this section shall include the following:

(1) The identity of the bidder;

(2) The title of the class of securities which is the subject of the bidder's tender offer;

(3) A statement that the bidder is making a request to the subject company pursuant to paragraph (a) of this section for the use of the stockholder list and security position listings for the purpose of disseminating a tender offer to security holders;

(4) A statement that the bidder is aware of and will comply with the provisions of paragraph (g) of this section; and

(5) The name, address and telephone number of the person whom the subject company shall contact pursuant to paragraph (a)(4) of this section.

(g) For the purpose of facilitating the dissemination of disclosure and of preventing fraudulent or deceptive acts in connection with certain tender offers, any bidder who requests that a subject company comply with the provisions of paragraph (a) of this section shall:

(1) If the subject company elects to comply with paragraph (b) of this section,

(i) Deliver sufficient sets of tender offer materials, envelopes or other containers therefor, the estimated amount of postage or payment of such amount to the subject company at the location specified by the subject company promptly after notification to the bidder of the subject company's election pursuant to paragraph (a)(4) of this section;

(ii) Promptly notify the subject company of an amendment to the bidder's tender offer materials requiring compliance by the subject company with paragraph (b)(6) of this section and promptly deliver sufficient copies of such amendment, envelopes and postage therefor at the location specified by the subject company pursuant to paragraph (a)(4) of this section;

(iii) Promptly reimburse the subject company for the out-of-pocket expenses incurred by the subject company and its agents in performing the acts required by this section, which reimbursement shall include, but not be limited to, additional postage, clerical expenses, expenses incurred in the preparation and updating of the stockholder list, and expenses incurred by banks, brokers and other persons in forwarding the bidder's tender offer materials and amendments thereto which have been paid by the subject company; and

(iv) With respect to a cash tender offer, comply with the requirements of Rule 14d-4(a)(3)(i) (§ 240.14d-4(a)(3)(i)).

(2) If the subject company elects to comply with paragraph (c) of this section,

(i) Use the stockholder list and security position listings furnished to the bidder pursuant to paragraph (c) of this section exclusively in the dissemination of tender offer materials to security holders in connection with the bidder's tender offer and extensions thereof;

(ii) Return the stockholder lists and security position listings furnished to the bidder pursuant to paragraph (c) of this section promptly after the termination of the bidder's tender offer;

(iii) Accept, handle and return the stockholder lists and security position listings furnished to the bidder pursuant to paragraph (c) of this section to the subject company on a confidential basis;

(iv) Not retain any stockholder list or security position listing furnished by the subject company pursuant to paragraph (c) of this section, or any copy thereof, nor retain any information derived from any such list or listing or copy thereof after the termination of the bidder's tender offer;

(v) Mail, at its own expense, a copy of its tender offer materials and any amendment disclosing a material change in such tender offer materials to each person whose identity appears on the stockholder list as furnished and updated by the subject company pursuant to paragraphs (c)(1) and (c)(2) of this section;

(vi) Contact the participants named on the security position listing of any clearing agency, make inquiry of each participant as to the approximate number of sets of tender offer materials required by each such participant, and furnish, at its own expense, suffi-

cient sets of tender offer materials and any amendment thereto to each such participant for subsequent transmission to the beneficial owners of the securities being sought by the bidder;

(vii) Promptly reimburse the subject company for the out-of-pocket expenses incurred by the subject company and its agents in performing the acts required by this section which reimbursement shall include, but not be limited to, clerical expenses and expenses incurred in the preparation and updating of the stockholder list; and

(viii) With respect to a cash tender offer, comply with the requirements of Rule 14d-4(a)(3)(ii) (§ 240.14d-4(a)(3)(ii)).

**§ 240.14d-6 Date of commencement of a tender offer.**

(a) (1) A tender offer for a class of equity securities referred to in section 14(d)(1) of the Act shall commence for the purposes of section 14(d) of the Act and the rules promulgated thereunder on the date

(i) The tender offer is first published by the bidder pursuant to Rule 14d-4(a)(1) (§ 240.14d-4(a)(1));

(ii) The summary advertisement of the tender offer is first published by the bidder pursuant to Rule 14d-4(a)(2) (§ 240.14d-4(a)(2));

(iii) The summary advertisement of the tender offer is first published by the bidder pursuant to Rule 14d-4(a)(3) (§ 240.14d-4(a)(3));

(iv) Definitive copies of a tender offer, in which the consideration offered by the bidder consists of securities registered pursuant to the Securities Act of 1933, are first published, sent or given by the bidder to security holders; or

(v) The tender offer is first published, sent or given to security holders by the bidder, if paragraphs (a)(1)(i) through (a)(1)(iv) of this section are not applicable to such tender offer.

(2) With respect to a cash tender offer that is published, sent or given to security holders by more than one method of dissemination pursuant to Rule 14d-4(a) (§ 240.14d-4(a)), the date of commencement of such tender offer will be determined by the method which first complies with one of the subparagraphs of Rule 14d-6(a)(1) (§ 240.14d-6(a)(1)).

(b) A public announcement by a bidder through a press release, newspaper advertisement or public statement which includes the information in paragraph (c) of this section with respect to a tender offer for a class of equity securities referred to in section 14(d)(1) of the Act in which the consideration consists solely of cash shall be deemed to constitute the commencement of a tender offer under paragraph (a)(1)(v) of this section *except that* such tender offer shall not be deemed to be first published, sent or given to security holders by the bidder under paragraph (a)(1)(v) of this section on the date of such public announcement if within five business days of such public announcement the bidder either:

(1) Makes a subsequent public announcement stating that the bidder has determined not to continue with such tender offer, in which event paragraph (a)(i)(v) of this section shall not apply to the initial public announcement; or

(2) Complies with Rule 14d-2(a) (§ 240.14d-2(a)) and contemporaneously disseminates the disclosure required by Rule 14d-3(b) (§ 240.14d-3(b)) to security holders pursuant to Rule 14d-4 (§ 240.14d-4) or otherwise in which event:

(i) The date of commencement of such tender offer under paragraph (a) of this section will be determined by the date the information required by Rule 14d-3(b) is first published, sent or given to security holders pursuant to Rule 14d-4 or otherwise; and

(ii) Notwithstanding paragraph (b)(2)(i) of this section, section 14(d)(7) of the Act shall be deemed to apply to such tender offer from the date of such public announcement.

(c) The information referred to in paragraph (b) of this section is as follows:

(1) The identity of the bidder;

(2) The identity of the subject company; and

(3) The amount and class of securities being sought and the price or range of prices being offered therefor.

(d) A public announcement by a bidder through a press release, newspaper advertisement or public statement which only discloses the information in paragraphs (d)(1) through (d)(3) of this section concerning a tender offer for a class of equity securities referred to in section 14(d)(1) of the Act in which the consideration consists solely of cash shall not be deemed to constitute the commencement of a tender offer under paragraph (a)(1)(v) of this section.

(1) The identity of the bidder;

(2) The identity of the subject company; and

(3) A statement that the bidder intends to make a tender offer in the future for a class of equity securities of the subject company which statement does not specify the amount of securities of such class to be sought or the consideration to be offered therefor.

(e) A public announcement by a bidder through a press release, newspaper advertisement or public statement which only discloses the information in Rule 135(a)(4) (§ 230.135(a)(4)) concerning a tender offer for a class of equity securities referred to in section 14(d)(1) of the Act in which the consideration consists solely of securities or consists of cash and securities shall not be deemed to constitute the commencement of a tender offer under paragraph (a)(1)(v) of this section.

**§ 240.14d-7 Additional withdrawal rights.**

(a) With respect to any tender offer subject to section 14(d)(1) of the Act and in addition to the provisions of section 14(d)(5) of the Act, any person who has deposited securities pursuant to such tender offer has the right to withdraw any such securities during the following periods:

(1) At any time until the expiration of fifteen business days from the date of commencement of such tender offer; and

(2) On the date and until the expiration of ten business days following the date of commencement of another bidder's tender offer for securities of the same class or the date a tender offer by the subject company for securities of the same class if first published, sent or given to security holders *provided that* the bidder has received notice or otherwise has knowledge of the commencement of such other tender offer and: *Provided further*, That withdrawal may only be effected with respect to securities which have not been accepted for payment in the manner set forth in the bidder's tender offer prior to the date such other tender offer is first published, sent or given to security holders.

(b) The time periods for withdrawal rights pursuant to this section shall be computed on a concurrent, as opposed to a consecutive basis.

*Explanatory Note:* The following is an example of the concurrent computation of time periods for withdrawal rights pursuant to this section. Bidder X commences a tender offer on Business day 1 and another bidder, Y, commences a tender offer for securities of the same class of securities on Business Day 7. For X's tender offer, the withdrawal rights under paragraph (a)(1) of this section from Business Day 8 through Business Day 15 would be included in the computation of withdrawal rights under paragraph (a)(2) of this section. Thus, withdrawal rights in X's tender offer would begin on Business Day 1 and terminate at the end of Business Day 17.

(c) For the purposes of this section, a bidder shall be presumed to have knowledge of another tender offer, as described in paragraph (a)(2) of this section, on the date such bidder receives.

(1) A copy of the Schedule 14D-1 (§ 240.14d-100) pursuant to Rule Rule 14d-2 (§ 240.14d-2) from such other bidder; or

(2) Notice of the fact that the subject company has published, sent or given to its security holders a tender offer for securities of the same class of securities being sought by the bidder.

(d) Withdrawal pursuant to this section shall be deemed effective upon the receipt by the bidder's depositary of a written or telegraphic notice of withdrawal specifying the name(s) of the tendering stockholder(s), the number or amount of the securities to be withdrawn and the name(s) in which the certificate(s) is (are) registered, if different from that of the tendering security holder(s).

§ 240.14d-8 Purchases after termination of certain tender offers.

(a)(1) Any purchase of or offer to purchase a security, described in paragraph (a)(2) of this section, by or on behalf of a bidder or any of its affiliates during the forty business day period following the date of termination of the bidder's tender offer, which was subject to section 14(d)(1) of the Act, shall be integrated with and shall be deemed to occur prior to the expiration of such tender offer for purposes of section 14(d)(7) of the Act.

(2) The security referred to in paragraph (a)(1) of this section includes:

(i) Any security referred to in paragraph (a)(1) of this section includes:

(i) Any security of the same class of securities sought in the bidder's tender offer; and

(ii) Any option, warrant, right, convertible security or other security which involves a contractual right, privilege or other provision of purchase or acquire through exercise, conversion, exchange or otherwise any security described in paragraph (a)(2)(i) of this section.

(b) Notwithstanding paragraph (a) of this section, the following purchases by the bidder or its affiliates following the date of the termination of a tender offer referred to in paragraph (a)(1) of this section shall not be integrated with or be deemed a part of such tender offer:

(1) The exercise of options, warrants or rights, the conversion of convertible securities, or the performance of agreements to purchase securities referred to in paragraph (a)(2)(i) of this section which were acquired or entered into prior to the date the bidder's tender offer was first published, sent or given to security holders pursuant to Rule 14d-6(a)(1) (§ 240.14d-6(a)(1)) and which were disclosed in the Schedule 14D-1 (§ 240.14d-100) or in any amendment thereto filed by the bidder and in the tender offer materials disseminated to security holders during the bidder's tender offer;

(2) A merger transaction involving the subject company in which the consideration for securities of the class of securities sought by the bidder's tender offer is substantially equal to the highest consideration offered by the bidder at any time during the tender offer; or

(3) Other agreements or transactions which the Commission shall exempt by order.

§ 240.14d-9 Exemption from statutory pro rata requirement.

The limited pro rata provisions of section 14(d)(6) of the Act shall not apply to any tender offer for less than all the outstanding securities of a class of equity securities referred to in section 14(d)(1) of the Act to the extent that the bidder provides in the tender offer materials disseminated to security holders on the date of commencement of the tender offer that in the event more securities are deposited during the period(s) described in paragraphs (a) and/or (b) of this section than the bidder is bound or willing to accept for payment, all securities deposited during such period(s) will be accepted for payment as nearly as practicable on a pro rata basis, disregarding fractions, according to the number of securities deposited by each depositor.

(a) Any period which exceeds ten days from the date of commencement of the tender offer;

(b) Any period which exceeds ten days from the date that notice of an increase in the consideration offered is first published, sent or given to security holders.

§ 240.14d-10 Solicitation/recommendation statements with respect to certain tender offers.

(a) No solicitation or recommendation to holders of a class of equity securities referred to in section 14(d)(1) of the Act shall be made by any person described in paragraph (d) of this section with respect to a tender offer for such securities unless as soon as practicable on the date such solicitation or recommendation is first published, sent or given to security holders, such person:

(1) Files with the Commission eight copies of a Tender Offer Solicitation/Recommendation Statement on Schedule 14D-10 (§ 240.14d-101), including all exhibits thereto; and

(2) Hand delivers a copy of such Schedule 14D-10 [§ 240.14d-101], including all exhibits thereto:

(i) To the bidder at its principal office or at the address of the person authorized to receive notices and communications (which is desclosed on the cover sheet of the bidder's Schedule 14D-1 (§ 240.14d-100) filed with the Commission);

(ii) To the subject company at its principal executive office: *provided that* the person making the solicitation or recommendation is other than the subject company or an affiliate of the subject company; and

(iii) To any national securities exchange where such class of securities is registered and listed for trading, which delivery shall be made, when practicable, prior to the opening of any such exchange, and to the National Association of Securities Dealers, Inc. ("NASD"), if such class of securities is authorized for quotation in the NASDAQ interdealer quoatation system: *provided that* the person making the soliciation or recommendation is either the subject company of an affiliate of the subject company.

(b) If any material change occurs in the information set forth in the Schedule 14D-10 (§ 240.14d-101) required by this section, the person who filed such Schedule 14D-10 shall:

(1) File with the Commission eight copies of an amendment on Schedule 14D-10 (§ 240.14d-101) disclosing such change and shall deliver a copy of such amendment to the bidder, the subject company, and exchange and the NASD, as required by paragraph (a)(2) of this section, promptly but not later than the date such material is first published, sent or given to security holders; and

(2) publish, send or give the material change to security holders.

(c) Any solicitation or recommendation to holders of a class of securities referred to in section 14(d)(1) of the Act with respect to a tender offer for such securities shall include the name of the person making such solicitation or recommendation and the information required by Items 2, 3(b), 4, 5, 6, 7 and 8 of Schedule 14D-10 (§ 240.14d-101) or a fair and adequate summary thereof; *Provided, however,* That such solicitation or recommendation may omit any of such information previously furnished to security holders of such class of securities by such person with respect to such tender offer.

(d)(1) This section shall apply to the following persons;

(i) Except as provided in paragraph (e) of this section, the subject company, any director, officer, employee, affiliate or subsidiary of the subject company;

(ii) Except as provided in paragraph (d)(2) of this section, any record holder or beneficial owner of any security issued by the subject company, the bidder, or by any affiliate of either the subject company or the bidder; and

(iii) Any person who makes a soliciatation or recommendation to security holders on behalf of any of the foregoing or on behalf of the bidder other than by means of a soliciatation or recommendation to security holders which has been filed with the Com-

mission pursuant to this section or Rule 14d-2 (§ 240.14d-2).

(d)(2) Notwithstanding paragraph (d)(1) of this section, this section shall not apply to the following persons:

(i) A bidder who is required to file a Schedule 14D-1 (§ 240.14d-101) by Rule 14d-2 (§ 240.14d-2);

(ii) Attorneys, banks, brokers, fiduciaries or investment advisers who are not otherwise participating in a tender offer and who furnish information and/or advice regarding such tender offer to their customers or clients on the unsolicited request of such customers or clients or solely pursuant to a contract or a relationship providing for advice to the customer or client to whom the information and/or advice is given.

(e) This section shall not apply to the subject company with respect to a communication by the subject company to its security holders which does no more than:

(1) Identify the tender offer by the bidder;

(2) State that such tender offer is under consideration by the subject company's board of directors and/or management;

(3) State that on or before a specified date (which shall not be later than fifteen business days prior to the scheduled expiration date of such tender offer) the subject company will advise such security holders of the recommendation of the board of directors to accept or reject such tender offer, or of the determination by the board of directors not to make a recommendation;

(4) Specify the means by which the subsequent communication referred to in paragraph (e)(3) of this section will be disseminated to security holders; and

(5) Request such security holders to defer making a determination whether to accept or reject such tender offer until they have received such recommendation or such determinations not to make a recommendation from the board of directors pursuant to paragraph (e)(3) of this section.

**§ 240.14d-100 Schedule 14D-1. Tender offer statement pursuant to section 14(d)(1) of the Securities Exchange Act of 1934.**

* * * * *

*General Instructions.* A. * * *

B. Information in exhibits to the statement may be incorporated by reference in answer or partial answer to any item or sub-item of the statement unless it would render such answer misleading, incomplete, unclear or confusing. Material incorporated by reference shall be clearly identified in the reference by page, paragraph, caption or otherwise. An express statement that the specified matter is incorporated by reference shall be made at the particular place in the statement where the information is required. A copy of any information or a copy of the pertinent pages of a document containing such information which is incorporated by reference shall be submitted with this statement as an exhibit and shall be deemed to be filed with the Commission for all purposes of the Act.

C. If the statement is filed by a partnership, limited partnership, syndicate or other group, the information called for by Items 2-7, inclusive, shall be given with respect to: (i) each partner of such partnership; (ii) each partner who is denominated as a general partner or who functions as a general partner of such limited partnership; (iii) each member of such syndicate or group; and (iv) each person controlling such partner or member. If the statement is filed by a corporation, or if a person referred to in (i), (ii), (iii) or (iv) of this Instruction is a corporation, the information called for by the above mentioned items shall be given with respect to: (a) each executive officer and director of such corporation; (b) each person controlling such corporation; and (c) each executive officer and director of any corporation ultimately in control of such corporation. A response to an item in the statement is required with respect to the bidder and to all other persons referred to in this instruction unless such item specifies to the contrary.

* * * * *

*Item 6. Interest in securites of the subject company*

* * * * *

*Instructions.* 1. * * *

2. If the information required by Item 6(b) of this schedule is available to the bidder at the time this statement is initially filed with the Commission pursuant to Rule 14d-2(a)(1) [§ 240.14d-2(a)(1)], such information should be included in such initial filing. However, if such information is not available to the bidder at the time of such initial filing, it should be filed with the Commission promptly but in no event later than two business days after the date of such filing and, if material, should be disclosed to security holders of the subject company in a manner similar to that in which the tender offer was first published, sent or given to such security holders. The procedure specified by this instruction is provided for the prupose of maintaining the confidentiality of the tender offer in order to avoid possible misuse of inside information.

* * * * *

**§ 240.14d-101 Schedule 14d-10.**

SECURITIES AND EXCHANGE COMMISSION

Washington, D.C. 20549

Schedule 14D-10

Solicitation/Recommendation Statement Pursuant to Section 14(d)(4) of the Securities Exchange Act of 1934

(Amendment No. —)

_____

(Name of Subject Company)

_____

(Name of Person(s) Filing Statement)

_____

(Title of Class of Securities)

_____

(CUSIP Number of Class of Securities)

_____

(Name, address and telephone number of person authorized to receive notice and communications on behalf of the person(s) filing statement)

Instructions: Eight copies of this statement, including all exhibits, should be filed with the Commission.

*General Instructions:* A. The item numbers and captions of the items shall be included but the text of the items is to be omitted. The answers to the items shall be so prepared as to indicate clearly the coverage of the items without referring to the text of the items. Answer every item. If an item is inapplicable or the answer is in the negative so state.

B. Information contained in exhibits to the statement may be incorporated by reference in answer or partial answer to any item or sub-item of the statement unless it would render such answer misleading, incomplete, unclear or confusing. Material incorporated by reference shall be clearly identified in the reference by page, paragraph, caption or otherwise. An express statement that the specified matter is incorporated by reference shall be made at the particular place in the statement where the information is required. A copy of any information or a copy of the pertinent pages of a document containing such information which is incorporated by reference shall be submitted with this statement as an exhibit and shall be deemed to be filed with the Commission for all purpsoes of the Act.

ITEM 1. SECURITY AND SUBJECT COMPANY

State the title of the class of equity securities to which this statement relates and the name and the address of the principal executive offices of the subject company.

ITEM 2. TENDER OFFER OF THE BIDDER

Identify the tender offer to which this statement relates, the name of the bidder and the address of its principal executive offices or, if the bidder is a natural person, the bidder's residence or business address (which may be based on the bidder's Schedule 14D-1 [§ 240.14d-100] filed with the Commission).

ITEM 3. IDENTITY AND BACKGROUND

(a) State the name and business address of the person filing this statement.

(b) If material, describe any contract, agreement, arrangement or understanding and any actual or potential conflict of interest between the person filing this statement or its affiliates and: (1) the subject company, its executive officers, directors or affiliates; or (2) the bidder, its executive officers, directors or affiliates.

*Instruction:* If the person filing this statement is the subject company and if the materiality requirement of Item 3(b) is applica-

ble to any contract, agreement, arrangement or understanding between the subject company or any affiliate of the subject company and any executive officer or director of the subject company with respect to this present employment by the subject company or any affiliate of the subject company, it shall not be necessary to include a description thereof in this statement if such information has been disclosed in any proxy statement, report or other communication sent within one year of the filing date of this statement by the subject company to the then holders of the securities and has been filed with the Commission: *Provided* That this statement and the solicitation or recommendation published, sent or given to security holders shall contain specific reference to such proxy statement, report or other communication and that a copy of the pertinent portion(s) thereof is filed as an exhibit to this statement.

ITEM 4. THE SOLICITATION OR RECOMMENDATION

(a) State the nature of the solicitation or the recommendation. If this statement relates to a recommendation, state whether the person filing this statement is advising security holders of the securities being sought by the bidder to accept or reject the tender offer or to take other action with respect to the tender offer and, if so, furnish a description of such other action being recommended.

(b) State the reason(s) for the solicitation or recommendation.

*Instruction:* A conclusory statement will not be considered sufficient disclosure of the reason for the solicitation or recommendation. An example of a conclusory statement is as follows: "The tender offer is in the best interest of shareholders." If such a conclusory statement is furnished as the reason for a solicitation or recommendation, disclosure of the basis or bases for such reason is also required by Item 4(b).

ITEM 5. PERSONS RETAINED, EMPLOYED OR TO BE COMPENSATED

Identify any person or class of persons employed, retained or to be compensated by the person filing this statement or by any person on its behalf, to make solicitations or recommendations to security holders and describe briefly the terms of such employment, retainer or arrangement for compensation.

ITEMS 6. RECENT TRANSACTIONS AND INTENT WITH RESPECT TO SECURITIES

(a) Describe any transaction in the securites referred to in Item 1 which was effected during the past 60 days by the person(s) named in response to Item 3(a) and by any executive officer, director, affiliate or subsidiary of such person(s).

(b) To the extent known by the person filing this statement, state whether the persons referred to in Item 6(a) presently intend to tender to the bidder, sell or hold securities of the class of securities being sought by the bidder which are held of record or beneficially owned by such persons.

ITEM 7. CERTAIN NEGOTIATIONS AND TRANSACTIONS BY THE SUBJECT COMPANY

If the person filing this statement is the subject company, describe any negotiation or transaction being undertaken by the subject company, in response to the tender offer, other than one described pursuant to Item 3(b) of this statement, which relates to or would result in:

(a) An extraordinary transaction such a merger or reorganization, involving the subject company or any subsidiary of the subject company;

(b) A purchase, sale or transfer of a material amount of assets by the subject company or any subsidiary of the subject company;

(c) A tender offer for or other acquisition of securities by or of the subject company; or

(d) Any material change in the present capitalization or dividend policy of the subject company.

ITEM 8. ADDITIONAL INFORMATION TO BE FURNISHED

Furnish such additional information, if any, as may be necessary to make the required statements, in light of the circumstances under which they are made, not materially misleading.

ITEM 9. MATERIAL TO BE FILED AS EXHIBITS

Furnish a copy of:

(a) Any written solicitation or recommendation which is published, sent or given to security holders in connection with the solicitation or recommendation referred to in Item 4.

(b) If any oral solicitation or recommendation to security holders is to be made by or on behalf of the person filing this statement, any written instruction, for or other material which is furnished to the persons making the actual oral solicitation or recommendation for their use, directly or indirectly, in connection with the solicitation or recommendation.

(c) Any contract, agreement, arrangement or understanding described in Item 3(b) or the pertinent portion(s) of any proxy statement, report or other communication referred to in Item 3(b).

*Signature.* After reasonable inquiry and to the best of my knowledge and belief, I certify that the information set forth in this statement is true, complete and correct.

_____
(Date)

_____
(Signature)

_____
(Name and Title)

*Instruction.* The original statement shall be signed by each person on whose behalf the statement is filed or his authorized representative. If the statement is signed on behalf of a person by his authorized representative (other than an executive officer of a corporation or a general partner of a partnership), evidence of the representative's authority to sign on behalf of such person shall be filed with the statement. The name and any title of each person who signs the statement shall be typed or printed beneath his signature.

IV. 17 CFR Part 240 is proposed to be amended by adding new §§ 240.14e-1 and 240.14e-2 (Regulation 14E) to read as follows:

REGULATION 14E

§ 240.14e-1 Unlawful tender offer practices.

As a means reasonably designed to prevent fraudulent, deceptive or manipulative acts or practices in connection with a tender offer within the meaning of section 14(e) of the Act, no person who makes a tender offer shall:

(a) Make a tender offer which does not remain open for at least thirty business days from the date such tender offer is first published, sent or given to security holders;

(b) Increase the offered consideration or the dealer's soliciting fee to be given in a tender offer unless such tender offer remains open for at least ten business days from the date that notice of such increase is first published, sent or given to security holders;

(c) Fail to pay the offered consideration or return the stock certificates deposited by or on behalf of securities holders as soon as reasonably practicable after the termination of a tender offer;

(d) Extend the length of a tender offer without issuing a notice of such extension by press release or other public announcement promptly, but in no event later than one business day before the scheduled expiration date of such tender offer, which notice shall include disclosure of the approximate number of securities deposited up to the date of such notice.

§ 240.14e-2 Trading in subject company securities prior to the bidder's public announcement of the intention to make a tender offer.

(a) It shall constitute a fraudulent, deceptive or manipulative act or practice within the meaning of section 14(e) of the Act for any person, who knows or has reason to believe that a bidder will make a tender offer for securities of a class of securities of a specific subject company, and who has received such information directly or indirectly from such bidder, to purchase or cause to be purchased any security or any option to purchase any security of such subject company if such bidder has not made a public announcement of its intention to make such tender offer, unless at a reasonable time prior to any such purchase such person makes a public announcement by press release or otherwise disclosing the information received and its source: *Provided, however,* That this paragraph shall not apply to purchases made by or caused to be made by a bidder.

(b) As a means reasonably designed to prevent the fraudulent, deceptive or manipulative act or practice described in paragraph (a) of this section, any bidder who knows or has reason to be-

lieve that any person has violated, is violating or is about to violate paragraph (a) of this section shall promptly make a public announcement by press release or otherwise disclosing appropriate information with respect to a tender offer for securities of a class of securities of a specific subject company.

(c) (1) It shall constitute a fraudulent, deceptive or manipulative act or practice within the meaning of section 14(e) of the Act for a bidder which has determined to make a tender offer for securities of a class of securities of a specific subject company and which has not made a public announcement of its intention to make such tender offer to purchase or cause to be purchased any security or option to purchase any security of the subject company unless prior to any such purchase such bidder makes a public announcement by press release or otherwise containing the information in paragraph (c)(2) of this section.

(2) The public announcement referred to in paragraph (c) of this section shall include disclosure of the following information:

(i) The identity of the bidder;

(ii) The identity of the subject company;

(iii) A statement that the bidder has determined to make a tender offer for a class of securities of the subject company;

(iv) the amount of consideration to be offered for each such security, if determined by the bidder; and

(v) The amount of securities and/or percentage of such class of securities to be sought, if determined by the bidder.

(Secs. 7, 10, 19(a), 48 Stat. 78, 81, 85; secs. 205, 209, 48 Stat. 906, 908; sec. 8, 68 Stat. 685; sec. 308(a)(2), 90 Stat. 57, secs. 3(b), 10(b), 13, 14, 23(a), 48 Stat. 882, 891, 894, 895, 901; sec. 203(a), 49 Stat. 704; sec. 8, 49 Stat. 1379; secs. 4, 5, 78 Stat. 569, 570; secs. 2, 3, 82 Stat. 454, 455; secs. 1, 2, 3-5, 84 Stat. 1497; secs. 3, 10, 18, 89 Stat. 97, 119, 155; sec. 308(b), 90 Stat. 57; secs. 202, 203, 91 Stat. 1494, 1498, 1499; 15 U.S.C. 77g, 77j, 77s(a), 78c(b), 78j(b), 78m, 78n, 78w(a)).

STATUTORY AUTHORITY

The Commission hereby proposes for comment: amendments to Rule 434(b) (§ 230.434(b)) pursuant to Sections 7, 10 and 19(a) of the Securities Act; and amendment to Schedule 13D (§ 240.13d-101) pursuant to Sections 13(d)(1), 13(d)(2) and 23(a) of the Exchange Act; proposed Rules 14d-1, 14d-2, 14d-3, 14d-4, 14d-5, 14d-6, 14d-7, 14d-8, 14d-9, 14d-10, Schedule 14D-10 and amendments to Schedule 14D-1 (§ 240.14d-100) pursuant to Sections 3(b), 10(b), 13(d), 14(d), 14(e) and 23(a) of the Exchange Act; and Proposed Rules 14e-1 and 14e-2 pursuant to Sections 14(e) and 23(a) of the Exchange Act.

By the Commission.

GEORGE A. FITZSIMMONS,
*Secretary.*

FEBRUARY 5, 1979.

[FR Doc. 79-4945 Filed 2-14-79; 8:45 am]

Federal Register

THURSDAY, FEBRUARY 15, 1979

PART V

THE NATIONAL ARCHIVES OF THE UNITED STATES • 1934 •

# CONSUMER PRODUCT SAFETY COMMISSION

# SAFETY STANDARD FOR WALK-BEHIND POWER LAWN MOWERS

## Final Standard and Proposed Certification Rule

[6355-01-M]

## Title 16—Commercial Practices

## CHAPTER II—CONSUMER PRODUCT SAFETY COMMISSION

## PART 1205—SAFETY STANDARD FOR WALK-BEHIND POWER LAWN MOWERS

### Subpart A—The Standard

AGENCY: Consumer Product Safety Commission.

ACTION: Final rule.

SUMMARY: The Commission adopts a consumer product safety standard containing performance requirements intended to reduce injuries from contact with the rotating blades of rotary walk-behind power lawn mowers having a rigid or semi-rigid blade, the type consumers usually use. The standard also requires a label warning of the danger of blade contact on both reel-type and rotary walk-behind power lawn mowers. In order to reduce injuries to the operator's hands and feet, the standard requires that rotary walk-behind power mowers have a blade control system that will stop the mower blade within 3 seconds after the operator's hands leave the normal operating position. If the manufacturer chooses to stop the blade by stopping the engine, the mower must be equipped with a power start mechanism. If the mower has only manual start, stopping the blade by stopping the engine is not allowed by the standard. In order to reduce injuries to the operator's feet, the standard also requires that if the rear periphery and discharge chute of a mower is probed with a specified foot probe, neither the probe nor any part of the mower shall enter the path of the blade.

DATES: The performance requirements of the standard apply to all of the subject rotary power lawn mowers manufactured after December 31, 1981. The labeling requirement is applicable to both rotary and reel-type power mowers manufactured after December 31, 1979. The promulgation of the standard will be 12:00 noon, Eastern Standard Time, on February 26, 1979.

FOR FURTHER INFORMATION CONTACT:

(1) Concerning the enforcement of the standard: Phyllis Buxbaum, Compliance and Enforcement, (301) 492-6626. (2) Concerning the development of the standard: William F. Kitzes, Office of Program Management, (301) 492-6557. Consumer Product Safety Commission, Washington, D.C. 20207.

SUPPLEMENTARY INFORMATION:

#### A. The Problem and the Solution

The CPSC estimates that there are approximately 77,000 persons injured each year by contacting the moving blades of walk-behind power lawn mowers. Of these, approximately 9,900 incidents involve the amputation of at least one finger or toe. The remaining injuries consist of about 11,400 fractures, 2400 avulsions (the tearing of flesh or a body part), 2300 contusions, and 51,400 lacerations. Not counting any monetary compensation for pain and suffering or loss of use of amputated fingers or toes, these 77,000 blade contact injuries result in injury costs of about $253 million each year.

For the most part, these injuries do not occur because the injured persons intentionally put their hand or foot under the blade housing. Usually, the contact with the blade occurs inadvertently while the person is performing some task in the vicinity of the mower.

For example, an elderly woman stopped mowing to pull some weeds beside the mower. After she had pulled the weeds, she turned back toward the mower and her foot was cut when it accidentally went under the housing.

In another case, a 35 year old teacher was emptying the contents of the grass catcher on his mower when some clippings fell out of the bag. When the operator bent down to remove the clippings, his hand inadvertently went under the housing and his fingers were cut.

Other cases that have been reported to the Commission include a 37 year old man who was attempting to clean the drive mechanism of a self-propelled mower, located under the mower housing, when the rotating blade cut his fingers. Also, a 60 year old printer was attempting to flick grass off the end of the discharge chute of his mower when he amputated a third of two of his fingers.

It may help to understand the ease with which the blade of a typical rotary mower may be reached if one realizes that the blade of such a mower may be only ⅛ in. above the edge of the housing and only ¼ in. from the inner surface of the housing. Thus, with presently produced mowers, the slightest intrusion of a hand or foot under the blade housing carriers with it a severe risk of injury.

The purpose of this document is to issue 16 CFR Part 1205, a consumer product safety standard for walk-behind power lawn mowers. This standard was developed under the "offeror" procedures provided for in the Consumer Product Safety Act ("the CPSA" or "the act", 15 U.S.C. 2051–2081). A more detailed discussion of the development process is given in the "BACKGROUND" section of this notice. The final standard is based on a recommended standard that was developed by Consumers Union as the offeror. Certain modifications were made to that standard as a result of the analysis by the Commission's staff and in response to comments that were received on the standard that was initially proposed by the Commission.

The standard will reduce the risk of injury from blade contact with rotary power lawn mowers by mandating 2 main performance requirements. First, in order to reduce injuries to the hand of the operator, the standard requires that the mower have a blade control that will stop the blade within 3 seconds of the time that the operator releases the handle of the mower. This is intended to insure that when the operator's hands leave the handle, the blade will stop before the operator can put his or her hands in the vicinity of the blade. This requirement will also have the effect of reducing foot injuries that occur when the operator is working or moving around the mower and is not holding on to the handle.

In order to further reduce foot injuries, the standard requires that areas of the mower that can be reached by the operator's feet while he or she is holding the handle to be constructed so that a specified probe that approximates the human foot cannot be brought into contact with the blade from these areas.

The requirements that are being mandated by the Commission will result in a significant increase in the retail price of rotary power lawn mowers. However, as will be explained below in more detail, the cost of these requirements bears a reasonable relationship to the safety benefits expected from the standard. In addition, there is no other way that has been developed up to this time to provide a comparable degree of safety to the user.

The standard also provides for a warning label to be on rotary and reel-type walk-behind power lawn mowers to warn of the hazard of contacting the blade.

The following sections of this notice contain an explanation of the background of the standard development proceeding, a description of the provisions of the final standard that is being issued, the Commission's response to comments that were received on the proposal, an explanation of the changes that were made from the proposal, and discussions of other issues relevant to the issuance of the final standard.

#### B. Background

On August 15, 1973, the Outdoor Power Equipment Institute (OPEI) petitioned the Consumer Product Safety

Commission, pursuant to section 10 of the Consumer Product Safety Act ("the act"), 15 U.S.C. 2059, to begin a proceeding for the development of a consumer product safety standard for power lawn mowers. In its petition, OPEI asked the Commission to publish a voluntary standard, ANSI B71.1-1972, "Safety Specifications for Power Lawn Mowers, Lawn and Garden Tractors, and Lawn Tractors," with amendments and a compliance program, as a proposed consumer product safety standard. (ANSI standards are approved by, published by, and available from the American National Standards Institute, Inc., 1430 Broadway, New York, New York 10018.)

The information about the injuries associated with power mowers that indicated a need for remedial action and that was considered in conjunction with the petition included the following:

1. Hazard analysis of in-depth investigations conducted originally by the Food and Drug Administration and later by the Consumer Product Safety Commission, from June 1, 1964, through September 30, 1973.

2. National Electronic Injury Surveillance System (NEISS) data reported from January 1, 1973, through December 31, 1973. For this period, it is estimated that over 64,000 injuries involving walk-behind power mowers were treated in all hospital emergency rooms in the United States.

3. Hearings of the National Commission on Product Safety, 1968-1970: Volume 5 (pp. 63-274), Supplement II (pp. 499-509), and Final Report (pp. 28-30).

4. Substantial product hazard notifications made to the Commission pursuant to section 15(b) of the act (15 U.S.C. 2064(b)).

After considering the available information concerning injuries and the injury potential associated with power mowers, the Commission preliminarily determined that the following hazards were associated with power lawn mowers and presented unreasonable risks of death or injury to consumers:

1. Lacerations, amputations, avulsions, and other injuries resulting from contact with the rotating mower blade.

2. Lacerations, punctures, and other injuries caused by objects propelled by the mower blade.

3. Lacerations, contusions, abrasions, and other injuries resulting from the rolling, slipping, or overturning of power lawn mowers or from failure of power lawn mower brakes or steering mechanisms.

4. Burns and other injuries resulting from direct contact with exposed heated surfaces of power mowers or from fires caused by ignition of liquids used as fuel for power mowers.

5. Injuries caused by electric shock from electrically powered lawn mowers or from electrical ignition systems.

6. Hearing loss and nonauditory trauma caused by exposure to excessive noise.

Accordingly, on November 16, 1973, the Commission granted the portion of the OPEI petition which requested that the Commission commence a proceeding to develop a consumer product safety standard for power lawn mowers. The Commission, however, denied the OPEI request to publish ANSI B71.1-1972, with amendments, as a proposed consumer product safety standard. This portion of the petition was denied because the Commission believed it should solicit offers to develop a standard and allow interested persons or organizations to submit previously issued or adopted standards as a recommended consumer product safety standard (section 7(b) of the act, 15 U.S.C. 2056(b)).

The Commission began the proceeding to develop a consumer product safety standard applicable to power lawn mowers by publishing a notice of proceeding in the FEDERAL REGISTER of July 22, 1974 (39 FR 26662). Interested persons were invited to submit an existing standard as a proposed consumer product safety standard or to submit an offer to develop a recommended safety standard. The notice of proceeding contains a more detailed discussion of the information about injuries associated with power lawn mowers that indicated a need for remedial action and discusses the provisions and adequacy of existing standards as they relate to the unreasonable risks of death or injury that the Commsission had preliminarily determined to be associated with power lawn mowers. In response to the notice of proceeding, the Commission received one existing standard and an Invitation for Bid issued by the General Services Administration, which was referred to as an existing standard, for consideration as proposed consumer product safety standards. The Commission also received four offers to develop a standard for power lawn mowers.

The Commission subsequently accepted the offer of Consumers Union of United States, Inc. (CU), 256 Washington Street, Mount Vernon, New York 10550, to develop a consumer product safety standard applicable to power lawn mowers (39 FR 37803, October 24, 1974). CU, as the offeror, gave representatives of industry, consumers, and other interests the opportunity to participate fully in the development of a recommended standard. CU submitted the recommended standard to the Commission on July 17, 1975. This recommended standard was, in fact, a comprehensive standard that addressed all types of lawn mowers and virtually all lawn mower injuries. The CU recommended standard would have applied to all walk-behind and riding reel and rotary type mowers, including garden tractors and lawn and garden tractors, with either an integral or attached cutting mechanism. The recommended standard contained requirements relating to human contact with the rotating blade, thrown objects propelled by the mower blade, noise, fuel, electrical energy (battery or household current), operating controls, brakes, drive train, stability, hot surfaces, structural integrity, labeling, and instructions. The Commission exhaustively analyzed the recommended standard and, on May 5, 1977, published a proposed power lawn mower safety standard in the FEDERAL REGISTER for public comment (42 FR 23052). The proposed standard for power lawn mowers also was a comprehensive standard addressing unreasonable risks of injury associated with both walk-behind and riding mowers. The proposal addressed not only blade contact injuries but also injuries caused by objects propelled by the mower blade (thrown objects); injuries due to lawn mowers rolling, slipping, or overturning, or to failure of lawn mower brakes or steering mechanisms; injuries due to burns resulting from direct contract with exposed heated surfaces of mowers or from fires caused by ignition of liquids used as fuel for power mowers; and injuries caused by electric shock from electrically powered lawn mowers or from electrical ignition systems (42 FR 23052).

The proposed standard did not contain requirements addressing noise, which the Commission had preliminarily found presented an unreasonable risk of injury. The Commission decided to defer regulations in that area to the Environmental Protection Agency (EPA) because EPA had begun the development of a noise standard for power lawn mowers under the Noise Control Act of 1972 (42 U.S.C. 4903(c)). In addition, the proposal did not contain a number of the provisions that had been recommended by CU. The reasons for not including those provisions and for modifying other provisions recommended by CU are discussed in detail in the FEDERAL REGISTER notice that proposed the standard (42 FR 23052; May 5, 1977). More than 100 comments were received on the proposal.

On June 7, 1978, the Commission published a notice in the FEDERAL REGISTER (43 FR 24697) announcing that it would issue separately the requirements addressing injuries due to blade contact with walk-behind mowers and requirements addressing injuries asso-

ciated with thrown objects, fuel and electrical hazards, and riding mowers. The Commission in issuing that notice determined it would be a more effectice and efficient method of addressing the unreasonable risks of injury associated with power lawn mowers to first issue requirements that address the most numerous injuries and then to do the additional work that would be required to issue requirements addressing other risks of injury.

Approximately 50% of all lawn mower injuries are due to blade contact with walk-behind mowers. The Commission estimates that a standard addressing blade contact injuries with walk-behind mowers would eleminate or reduce the severity of over 38% of all power lawn mower injuries and 77% of all blade contact injuries associated with walk-behind mowers (NEISS Power Mower Baseline Study, July-September 1977). (The 23% of blade contact injuries that are not addressed by the standard include situations such as those where the mower is physically lifted so that the blade can contact the victim.) Therefore, the Commission decided to first issue requirements addressing blade contact injuries with walk-behind lawn mowers and subsequently to issue requirements, as needed, to address other risks of injury, including risks of injury associated with riding mowers, thrown objects, fuel and electrical hazards, and braking and steering mechanisms. Part 1205, Subpart A, which is being promulgated at 12:00 noon, Eastern Standard Time, on February 26, 1979 applies only to blade contact injuries with walk-behind mowers. Requirements addressing other risks of injury will be issued as Subparts to the standard as appropriate.

C. How Proposed Standard Addressed Blade Contact Injuries

The Commission estimates that about 150,000 injuries associated with all types of power lawn mowers occur each year and that about 60,000 of these are treated in hospital emergency rooms. Of the injuries treated in emergency rooms, approximately 47,000 involve walk-behind mowers, and 30,000 involve contact with the rotating blade. The CPSC estimates that including the injuries that are not treated in emergency rooms, there are approximately 77,000 blade contact injuries each year involving walk-behind mowers. The remaining injuries with walk-behind mowers are due to a number of different causes including contact with thrown objects, inadvertent fuel ignition, and maintenance activities. Approximately 13% of the blade contact injuries associated with walk-behind mowers involve amputation of a body part, usually fingers or toes, 15% involve fracture, crushing or dislocation of a body part, and 70% involve laceration or avulsions (the tearing of flesh or a body part). A relatively high proportion of persons injured by lawn mowers are hospitalized. The average rate of hospitalization for all National Electronic Injury Surveillance System (NEISS) products is less that 4%. However, over 10% of persons injured by walk-behind power mowers are hospitalized (NEISS Power Mower Baseline Study, July-September, 1977).

The Commission addressed some blade contact injuries by including in the proposed standard a requirement for a blade control system. This system would (1) prevent operation of the blade unless the control is actuated by the operator, (2) require that the operator be in continuous contact with the control in order for the blade to continue to be driven, and (3) cause the blade to stop within a specified time upon release of the control by the operator. The effect of these requirements is that if the operator leaves the normal operating position, the blade will stop before the operator can contact the blade with his or her hands or feet. The requirement also provides additional protection against blade contact with the foot when the operator is not in the normal operating position.

The proposal also addressed other blade contact foot injuries by requirements and tests involving a foot probe designed to determine if the operator's foot could contact the mower blade during commonly occurring conditions associated with mower use on level ground and on the transition to a slope. The foot probe test in the proposal consisted of inserting a specified foot probe as far as possible under all points of the bottom edge of the blade housing and shields and then pivoting the toe of the foot probe upward around the heel as much as possible as the probe was withdrawn. In order for the mower to meet the requirements of the proposal, the probe could not enter the path of the blade or cause any part of the mower to enter the path of the blade. To assure that shields used to reduce foot injuries provided the intended level of protection without interfering with mower utility and performance, the proposal included a shield strength test and a test to insure the shields would not prevent the mower from traversing typical obstructions. There was also a provision that shields could not be removed without tools. The proposal also included handle strength requirements and a requirement for an upstop for the handle to help prevent the operator from coming too close to the mower during mowing.

The proposal also included labeling requirements intended to warn of the danger presented by contact with the blade. The size and content of the label were selected with the intent that the label would be conspicuous to the user and would adequately warn of the hazard.

The proposed standard consisted of 14 sections. However, since the requirements that are issued at this time are applicable only to blade contact injuries associated with walk-behind mowers, Part 1205 includes only 8 sections covering the following subject matter: § 1205.1, Scope of the standard (proposed § 1205.1); § 1205.2, Effective date (proposed § 1205.1); § 1205.3, Definitions (proposed § 1205.2); § 1205.4, Walk-behind rotary power mower protective shields (proposed § 1205.3); § 1205.5, Walk-behind rotary power mower controls (proposed § 1205.5); § 1205.6, Warning labels (proposed § 1205.12); § 1205.7, Prohibited stockpiling (proposed § 1205.13); and § 1205.8, Findings (proposed § 1205.14).

In a number of instances, the Commission has not included in the final mandatory standard provisions that appeared in the proposal and that also appear in the voluntary industry standard (ANSI B71.1-1972, B71.1a-1974, B71.1b-1977) because virtually all power mower manufacturers conform to the provisions of the voluntary standard. (These instances are noted below in the discussion of the Commission's response to the comments received on the proposal.) However, the Commission will continue to monitor mower injuries, and if significant numbers of injuries are demonstrated to occur because of non-compliance with the voluntary standard, insufficiency of the voluntary standard requirements, or other reasons, the Commission will consider amending the mandatory standard as appropriate.

The following are the voluntary standard requirements relating to the risk of injury from blade contact.

1. A rear protective shield (trailing shield) extending across 90% of the cutting width.
2. A rear protective shield strength test.
3. Except for the discharge or other openings, the housing shall extend ⅛ in. below the lowest blade position.
4. Structural integrity test for housing and shields, consisting of the injection of 100½ in. diameter steel balls, one at time, under the housing of the running mower.
5. Requirements limiting the height of the highest point of the bottom edge of the front of the housing.
6. Requirements for arrangement of the starting mechanism and for mower stabilization.
7. Foot probe test of discharge opening.

8. Shields or guards cannot be removed without the use of tools.

9. Protection against unintentional uncoupling of the handle.

10. Upstop for mower handle.

11. Strength test for handle and handle supporting structure.

12. Swingover handles must automatically lock back into operating position.

13. If a handle storage position is provided, the handle shall automatically or manually lock into operating position when the handle is moved into this position.

14. After declutching or shutting off drive power from maximum speed, the blade shall stop rotating within 7 seconds.

15. A shut off control which must be manually activated to restart the mower.

16. For self-propelled mowers:

a. Engine cannot start while drive is engaged.

b. Except for deadman controls, drive controls shall disengage in direction opposite to mower travel. Such controls shall be on handle in the operator zone.

c. Handle mounted engine controls shall move forward for fast and rearward for slow or stop.

d. Cautionary label to start only in neutral.

17. Very quiet mowers shall have an indication of blade rotation.

18. Label stating "CAUTION" or "DANGER" near discharge opening.

19. Label durability requirements.

20. Safety instructions with the equipment.

D. DESCRIPTION OF THE FINAL STANDARD

The final standard being issued below as Part 1205 applies to walk-behind rotary and reel-type power lawn mowers having a minimum cutting width of 12 in and having a rigid or semi-rigid blade. The minimum cutting width was established in order to distinguish the mowers intended to be covered by the standard from edgers and trimmers to which the standard does not apply. The limitation to rigid and semi-rigid blades was included so that the standard would not apply to mowers with blades of monofilament line which may not present the same risk of injury as do mowers with more rigid blades.

Mowers that have *all* of the following characteristics are also excluded from the coverage of the standard: a cutting width of 30 in or more; a weight of 200 lb or more; and, if powered by an engine (as opposed to an electric motor), 8 or more hp. This exclusion is to narrow the scope of the standard to the smaller mowers usually used by consumers. If a mower has only 1 or 2 of these features, it is covered by the standard.

Reel-type mowers are exempt from the performance requirements of the standard but are subject to the labeling requirements of § 1205.6.

*Effective date.* The performance requirements of the standard apply to mowers within the scope of the standard that are manufactured after December 31, 1981. The labeling requirements apply to such mowers that are manufactured after December 31, 1979.

*Foot probe test.* The standard specifies a foot probe that is intended to represent actions typical of those that can be achieved by the human foot in normal mowing situations. The foot probe is inserted within the area of the discharge chute and the area at the rear of the mower within 60° of either side of the centerline of the mower. These areas were selected because they are the areas where foot contact injuries are known to occur while the operator is holding the handle. Foot contact injuries that occur while the operator is not holding the handle will be addressed by the blade control described below.

In the foot probe test, the probe is inserted with an insertion force that does not exceed 4 lb or lift the mower housing. After the foot probe is inserted as far as possible, the probe is withdrawn and, at the same time, is pivoted upward about the "heel" of the probe as far as possible without lifting the mower. In order for the mower to pass the test, the foot probe must not enter the path of the blade or cause any part of the mower to enter the path of the blade.

*Obstruction test.* An obstruction test is also provided which consists of passing the mower back and forth over a test fixture with a level surface having (1) a 0.99 in deep depression with a 5.90 in radius of curvature lined with a 16- to 36-grit abrasive and (2) a raised obstacle 0.60 in square, each extending the full width of the fixture. The depression and obstacle are located a sufficient distance apart that the mower contacts only one at a time. The test fixture may be relieved only to prevent interference with any blade retaining device. The speed of the mower across the fixture may not exceed 2.2 ft per sec in order to limit any tendency of the mower to bounce as it crosses the fixture.

During this test, the mower shall not stop as a result of contact with the raised obstacle, no more than one wheel at a time shall be lifted from the fixture surface, and no shield shall enter the path of the blade.

The obstructions in this test are designed to simulate irregularities in the surface over which the mower may pass in normal use. The requirement that not more than one wheel shall lift is intended to insure that the protective shields of the mower do not lift excessively during use, thus exposing the blade. The requirement that the obstacle not stop the mower is to protect against the possibility that users would be tempted to remove the protective shielding if the mower would "hang up" on irregularities during normal use. This requirement is also intended to protect against a known injury pattern in which sudden stopping of the mower causes the mower to lift and/or the operator to stumble, whereupon the operator's foot contacts the blade. The requirement that the shield not enter the path of the blade addresses the user's potential temptation to remove the shield and prevents the pieces of the shields from becoming a thrown objects hazard if they are knocked off by the blade.

The requirement that the depression is lined with the specified rough surface helps insure that the mower will not slip as it rolls into the depression, thereby making the test results more repeatable.

*Shield strength test.* The standard requires that any shield located within the areas to be foot probed shall not permanently separate, crack, or deform when subjected to a 50 lb static tensile force uniformly distributed over not less than half the length of the shield. This force is intended to insure that the shield is sufficiently strong to maintain its structural integrity and remain attached under conditions of use, thus retaining its ability to protect the operator. The force is to be applied for a period of 10 seconds in order to provide an adequate opportunity for deformations, separations, or cracks to occur. This test does not apply to the mower housing or grass catchers.

*Movable shields.* In order to insure that the protection of the foot probe test is not negated, shields that are movable for the purpose of attaching auxiliary equipment must, when moved, either automatically return to the normal position when the attached equipment is not present or prevent the operation of the blade unless the attached equipment is present or the shield is returned to its normal position.

*Blade control system.* Walk-behind rotary power mowers must have a blade control system that will (1) prevent the blade from operating unless the operator actuates the control, (2) require continuous contact with the control in order for the blade to continue to be driven, and (3) cause the blade to stop within 3 seconds after release of the control. As explained above, the effect of this requirement is that the blade will stop between the time the operator removes his or her hands from the control and the time

the operator could contact the blade with his or her hand.

Unless the mower has a power restart capability, the control must stop the blade without stopping the engine. This is to prevent the operator from being unduly tempted to disable the blade control as a result of the inconvenience of having to manually restart the engine each time the handle is released.

In order to prevent inadvertent starting of the blade by accidental contact with the blade control described above, the standard requires a second means that must be manually actuated before the operator can restart the stopped blade.

*Starting control location.* In order to insure that the operator is in a position that is protected by the foot probe requirement when the mower is started, mowers with blades that begin operation when the power source starts must have their starting means located within the operating control zone, which is defined as a horizontal cylinder whose axis is tangent to the rear of the handle and that has a 15 in radius. In the Commission's judgment, an operator using starting controls located within this area will be behind the handle and will not be required to stand at the side of the mower while starting the mower, as would be required if the starting controls were located on the engine as are some currently produced power restart controls.

*Warning label.* Rotary mowers are required to bear a specified warning label near the discharge chute, and reel-type mowers are required to bear the label as near as possible to the center of the cutting width. The location requirements are intended to insure that the labels will be seen by the operator, and for that reason a minimum size for the label is prescribed.

*Stockpiling.* Section 9(d) of the CPSA states that consumer product safety standards shall be applicable only to consumer products manufactured after the effective date of the standard. In order to prevent a manufacturer from circumventing the purpose of the standard, section 9(d) authorizes the Commission to issue a rule prohibiting stockpiling of the product covered by the consumer product safety standard. "Stockpiling" is defined as the manufacturing or importing of the product, between the issuance of the standard and its effective date, at a rate that is significantly greatly than the rate at which the product was produced during a base period prescribed in the stockpiling rule. The Commission will issue a stockpiling rule in connection with the walk-behind power lawn mower standard. This rule prohibits production of mowers at a rate that exceeds by 20% the rate at which a person subject to the standard manufactured or imported mowers during their most productive 365 day period between September 1, 1971, and August 31, 1978. The Commission believes that the lengthy base period is sufficient to allow for variations in sales that may have affected any particular business, and the 20% allowance should allow for normal changes in market shares or expansion of sales between the issuance of Part 1205 and its effective date. Any manufacturer or importer whose business may exceed these limits because of unusual circumstances, and not because of stockpiling intended to circumvent the purpose of the standard, may apply to the Commission for a limited exemption from this stockpiling rule. Such a request should be supported by data showing the unusual circumstances relied upon.

*English units.* The requirements of the standard are stated in English units of measurement, since the Commission is informed that these units are commonly used by the power lawn mower industry. However, for convenience, the metric equivalents are also given.

E. STATUTORY FINDINGS

In order to issue a rule such as Part 1205, the CPSA requires the Commission to consider and make appropriate findings with respect to a number of topics. These findings are discussed below.

(1) *The degree and nature of the risk of injury Part 1205 is designed to eliminate or reduce.* The Commission estimates that there are approximately 77,000 injuries to consumers each year caused by contact with the blades of walk-behind power lawn mowers. From 1977 data, the Commission estimates that each year there are approximately 7,300 finger amputations, 2,600 toe amputations, 2,400 avulsions, 11,450 fractures, 51,400 lacerations, and 2,300 contusions. Among the lacerations and avulsions, 35,800 were to hands and fingers and 18,000 were to toes and feet. The estimated costs (such as medical expenses and lost wages) caused by these injuries are $253 million, not counting any monetary damages for pain and suffering. These injuries are caused when consumers accidentally contact the blade, either inadvertently while in the vicinity of the mower, or while intentionally performing some tasks which they erroneously believe will not bring their hand or foot into the path of the blade.

Part 1205 is expected to eliminate or reduce the severity of about 60,000 blade contact injuries per year, or 77% of all such injuries. The Commission estimates that if all mowers had been in compliance with the standard in 1977, about 6,800 finger amputations, 1,500 toe amputations, 11,000 fractures, 1,800 avulsions, 38,400 lacerations, and several hundred contusions would not have occurred. Of the lacerations and avulsions, 28,300 finger injuries and 9,400 toe injuries would have been prevented. The Commission estimates that $211 million in injury costs would have been prevented.

(2) *Consumer products subjects to the rule.* The products subject to this standard are walk-behind power lawn mowers with a cutting width of at least 12 in. Rotary power mowers with rigid or semi-rigid rotary blades are subject to all the provisions of the standard while reel-type and rotary mowers are subject to the labeling requirements. Mowers that have engines of 8 hp or greater, weigh 200 lb or more, and have a cutting width of 30 in. or more are excluded from the standard. The Commission estimates that at least 98% of the total annual market (by unit volume) for walk-behind mowers will be affected by the standard. The Commission estimates that in 1978 this market was 5.4 million units.

(3) *Need of the public for the products subject to the rule.* The Commission finds that the public need for walk-behind power mowers, which provide a relatively quick and effective way to cut grass, is substantial. Riding mowers, lawn and garden tractors, hand reel mowers, trimmers and edgers, and sickle-bar mowers also provide grass-cutting services, but walk-behind power rotary mowers are by far the most commonly used devices for maintaining household lawns. There are no devices that can completely substitute for walk-behind power mowers as a group, since they have applications for which other products are not as suitable. Each type of walk-behind power mower has individual properties which meet public needs, although one type of walk-behind is often an acceptable substitute for another. The newly developed monofilament line mower is not included within the scope of the standard and could be a substitute for mowers using rigid or semi-rigid blades under some conditions.

(4) *Probable effect of the rule upon the utility of the product.* The Commission finds that the probable overall effect of the standard should be to increase the utility of mowers. In the first place, consumers are likely to experience an increased sense of security from having a safer mower. A study of brake-clutch mowers conducted by the Federal Supply Service (GSA) shows that almost all users appreciated the safety features on brake-clutch mowers. In addition, by releasing the

blade control and stopping the blade, the operator can then travel over gravel or other surfaces without fear of thrown objects or of the blade striking objects that might damage the mower. Brake-clutch type mowers would also give an increase in utility by enabling the operator to use the clutch to prevent stalling when the mower bogs down in heavy grass.

On the other hand, there may be some minor adverse effects on utility caused by some aspects of complying mowers. For example, in very heavy mowing conditions, there may be some difficulty in engaging the blade in a blade-clutch mower. (However, mowers that are currently on the market that are not equipped with a blade clutch may have difficulty when starting the engine in heavy grass.)

Complying mowers may require slightly more time and a few additional actions to operate. Since complying mowers may have more electrical and mechanical parts than current mowers, they may weigh more and require more maintenance than current mowers. No significant increase in mowing time is expected if a brake-clutch device is used to comply with the standard since each engagement of the blade would require only a few seconds. The amount of additional time and expense required for maintenance, if any, will be dependent on the design solution the manufacturer uses. Such disutilities are expected to be slight and to be more than balanced by the increases in utility described above.

During the development of the rule, questions were raised about whether changes in the shields necessitated by the foot probe requirements would adversely affect utility by causing mowers to be hard to push in grass or to be unable to mow close to walls. At the time of issuance of this rule, mowers are available that will pass a 360° foot probe test, and there are others that will pass rear and side foot probing without any significant loss of utility caused by shielding. Therefore, the Commission concludes that this requirement will not adversely affect the utility of mowers. Mowers with swing-over handles, however, may be more difficult to design in this regard, since 120° at each end of the mower, plus the discharge chute, are subject to the foot probe requirement. However, since mowers meeting this requirement have already been built without apparent loss of utility, the Commission concludes that shielding can be designed so that there should be no loss of utility even for mowers with swing-over handles.

As required by section 9(b) of the CPSA, the Commission, in considering the issues involved in issuing a power lawn mower safety standard, has considered and taken into account the special needs of elderly and handicapped persons to determine the extent to which such persons may be adversely affected by the rule. The Commission has determined that there will be no significant adverse effect on such persons as a result of Part 1205. In the first place, the rule can affect only those persons who are physically capable of using a power lawn mower. None of the rule's provisions will make it more difficult to operate a mower that complies with the standard. On the contrary, complying mowers should be easier to use because the need for manually restarting the mower will be less and because, if the mower uses a brake-clutch to comply with the blade control requirement, use of the brake-clutch can reduce the tendency of the engine to stall in heavy grass. Although a person's ability to hold a device such as a blade control for a long period of time will decline with age, the force required to hold the blade control can be made low enough that it will not be a problem during the length of time that it takes for consumers to mow a lawn.

After considering the possible adverse effects on mowers that could be caused by the standard and balancing them against the increase in utility that is expected, the Commission concludes that, for a typical consumer, the increases in utility should more than offset any decreases.

(5) *Probable effect of the rule upon the cost of the product.* The Commission estimates that the retail price impact of the standard will be about $35 for the average walk-behind mower. Based on an average useful mower-life of about 8 years, the additional annual cost to the purchaser is expected to average about $4.40. The probable effect of the standard on the various types of mowers within its scope will differ. Percentage increases in price will vary from about a 7 percent increase for power-restart self-propelled mowers to about a 30 percent increase for gasoline-powered manual start push mowers. (See Table 1 of the CPSC report, *Economic Impact of Blade Contact Requirements for Power Mowers*, January 1979, for the incremental cost calculation by product category.) The costs attributable to individual requirements of the standard are discussed in paragraph (8) below.

(6) *Probable effect of the rule upon the availability of the product.* The Commission finds that the standard is not expected to have a significant impact on the availability of walk-behind rotary mowers, since domestic production capacity appears to be sufficient to handle any increased demand for safety-related components or materials. Any increased demand for raw materials will be small compared to the volume of raw materials currently used for production of walk-behind mowers. Furthermore, walk-behind power mower production does not consume a large proportion of the annual production of any of the raw materials it uses. Although it may be more costly to adapt some types of power mowers to the standard than others, the effects of the standard on the price or utility of a particular category of power mowers are not expected to cause radical shifts in demand among types of mowers. The Commission finds that all types of power mowers subject to the standard will be available, although some, such as house-current-powered mowers, may increase their market shares because they can be brought into compliance with the standard at a lesser cost.

Because some manufacturers may not revise their entire product line before the effective date of the standard, individual mower manufacturers may initially have less varied lines than at present, but there should be no decrease in the overall types and features of mowers available to consumers.

(7) *Alternative methods.* The Commission has considered other means of achieving the objective of the standard. For example, alternatives were considered such as hand probes, "blade harmless" tests, and blade control by engine kill but allowing manual restart. These alternatives have been rejected by the Commission as being either unfeasible or not as effective as the rule which is being issued.

Similarly, the Commission has found no alternative means of achieving the objective of the standard that it believes would have fewer adverse effects on competition or that would cause less disruption or dislocation of manufacturing and other commercial practices, consistent with the public health and safety. For the power mower industry in general, the disruptions and dislocations of existing manufacturing and commercial practices due to the standard are expected to be minor. Small manufacturers of relatively low-priced mowers may find their price differentials with the larger, nationally-known firms narrowed. The small manufacturers are primarily assemblers of mowers and will have to rely on their suppliers for most of the components and changes needed to comply with the standard. These small manufacturers are the firms, if any, most likely to withdraw from the mower market since they generally have no engineering staff and have low volumes over which to spread development costs. If any firms should withdraw from the market, it is possible that some portion of them may return when complying designs and

parts become available to them. The standard is not expected to have an appreciable impact on foreign trade or domestic competition since exports and imports represent only a small percentage of domestic shipments and production.

The distribution patterns for power lawn mowers may be slightly affected. Retail outlets that provide more service to the customer may benefit from the standard temporarily. Complying mowers will have different controls and features than current mowers, and mower purchasers may want more information and assistance than is provided by outlets such as discount stores and drug stores. Over the long run, as mower purchasers become familiar with the safety-related features, the advantage of the small, service-oriented outlet will decline. Since lawn mower sales are a relatively small proportion of discount store or drug store sales, no significant impact on these types of outlets is expected.

(8) *Unreasonable risk of injury.* The determination of whether a consumer product safety rule is reasonably necessary to reduce an unreasonable risk of injury involves a balancing of the degree and nature of the risk of injury addressed by the rule against the probable effect of the rule on the utility, cost, or availability of the product. The factors of utility and availability of the product, adverse effects on competition, and disruption or dislocation of manufacturing and other commercial practices have been discussed above. The following discussion concerns the relationship of anticipated injury reduction and costs for various requirements of the standard.

The standard consists of 3 main requirements: the foot probe test, the blade control with 3 second stop time, and the warning label. The foot probe and blade control requirements, while worthwhile by themselves, each have additional supporting requirements that increase or guarantee the effectiveness of the primary requirement.

The foot probe requirement for the rear of the mower and the discharge chute is supported by (1) the obstruction test, (2) the shield strength test, (3) the requirement that shields that are movable for the attachment of auxiliary equipment must either return automatically or prevent operation of the blade when the equipment is removed, and (4) the requirement that power restart controls must be located in the operator control zone.

The foot probe and related requirements are expected to reduce the number of blade contact injuries to the foot by 13,000 each year. It is not possible to apportion this injury reduction among the respective requirements because they are interrelated. The cost of these requirements is estimated to be about $4.00 per mower, mostly for redesign of the shields. The shield strength requirement is similar to a requirement in the existing voluntary standard that is almost universally complied with, and should comprise only a small portion of the $4.00 retail price increase attributable to this related group of requirements. Also, shields complying with the movable shield requirement are featured in some currently produced mowers.

Since 5.4 million mowers are sold, and since the average injury expected to be eliminated by the standard costs approximately $3,500, these foot probe requirements should result in a cost increase of about $22,000,000 and undiscounted injury savings of about $46,000,000, exclusive of any allowance for pain and suffering. (Injury costs consist of medical expenses, lost income, and insurance administration. See the CPSC report, *Economic Impact of Blade Contact Requirements for Power Mowers,* January 1979 for a detailed analysis of the possible effects of discounting and inflation on the computation of the quantifiable benefits associated with the rule.)

The starting location control requirement would apply only to mowers with a power restart capability using engine kill to stop the blade. The cost for relocating the power restart switch, if necessary, should be very minor, and more than offset by the elimination of a clutch, as discussed below.

The requirement that the blade stop within 3 seconds of the release of the blade control is supported by (1) the requirement that those mowers that stop the blade by stopping the engine must have a power restart (to remove the motivation to disable the blade control because of the inconvenience of manually starting the mower each time the control is released) and by (2) the requirement for an additional control that must be actuated before the blade can resume operation (to prevent accidental starting of the blade). Together, these blade control requirements are expected to reduce the number of blade contact injuries by 46,500 per year for an undiscounted savings in injury costs of about $165,000,000 per year, exclusive of pain and suffering.

Virtually all mowers will be subjected to a cost increase of about $3 for the blade control actuating means and $1 for the second control required to restart the blade. (The $1 cost could be eliminated for power restart-engine kill mowers that do not start when the blade control is actuated.

Also, most mowers would require a brake for the blade in order to achieve a 3 second stop time. This would add another $6.50-$8.50, depending on the type of mower.

Mowers with power restart capability could allow the blade to stop by killing the engine and thus would not need to provide a clutch to disconnect the engine from the blade. However, a brake might still be required to insure that the mower would stop within the 3 second requirement. Mowers using manual restart would have to provide a clutch or other blade disengagement devices, which would probably be combined with the brake in a unitary brake-clutch mechanism.

The following are the Commission's estimates of the probable retail price increases associated with certain types of currently produced mowers that will be caused by the blade control requirements.

| Type of mower | Blade control retail |
|---|---|
| | Price increases |
| Electric mowers (house current or battery powered) | $15.00 |
| Present electric start gasoline mowers | 13.00-19.50 |
| Present manual start gasoline mowers brake-clutch approach | 32.50 |
| Power restart approach | 29.00-39.50 |

The weighted average retail price increase of the blade stop requirements is expected to be about $31 per mower for a total retail price increase of $167,000,000.

The foot probe and blade stop requirements of the standard will obviously not completely protect the users of rotary mowers under all circumstances. In addition, these requirements are not applicable to reel-type mowers. It is still essential for consumers to be aware of the hazard of blade contact and take the proper precautions to protect themselves. It is especially important that users not become complacent with the knowledge that the mower incorporates blade contact safety requirements. Accordingly, the Commission has determined that it is desirable that rotary and reel-type mowers bear a label warning of the danger of blade contact. Such a requirement would have practically no effect on the retail price of mowers since labels are very inexpensive and practically all currently produced mowers bear some type of warning label. In view of the hazard that will be associated with power mowers even after the effective date of the standard, and the low cost of the label, the Commission concludes there is an unreasonable risk of injury that can be addressed by the label requirements in Part 1205.

Labeling requirements under the CPSA may be issued under the authority of either section 7 of the act or

section 27(e), or both. Under section 7, the Commission must find that the label is reasonably necessary to prevent or reduce an unreasonable risk of injury. Under section 27(e), the Commission must determine that the label conveys performance and technical data required to carry out the purposes of the act, one of which is "to protect the public against unreasonable risks of injury associated with consumer products" (section 2 of the act). The Commission concludes it has authority to issue the labeling requirement of Part 1205 under both section 7 and 27(e) and finds that issuance of the requirement is necessary to convey the performance and technical data concerning the blade contact hazard, in accordance with section 27(e), for the purpose of the act mentioned above.

Therefore, after considering the anticipated costs and benefits of Part 1205 and the other factors discussed above, and having taken into account the special needs of elderly and handicapped persons to determine the extent to which such persons may be adversely affected by the rule, the Commission finds that Part 1205 (including the effective dates) is reasonably necessary to eliminate or reduce the unreasonable risk of injury associated with walk-behind power lawn mowers and that promulgation of the rule is in the public interest.

### F. Response to Comments

In response to the proposal of May 5, 1977, the Commission received 118 written comments. An informal proceeding to receive oral comments on the proposal was held on June 13, 1977. Those persons who submitted comments by August 12, 1977, were given a further opportunity until September 6, 1977 to submit comments on oral or written comments that were submitted by others (42 FR 34892). In addition, the Commission has received a number of late comments, which it has considered; and the Commission's staff has held several public meetings to discuss various issues concerning the lawn mower proposal. Also, on November 2, 1978 (43 FR 51038), the Commission requested additional comments on the data it had received concerning the safety and reliability of brake-clutch mechanisms. Twenty-one additional written comments were received in response to this request, and these comments are addressed in this notice. Also addressed are oral comments on this issue that were presented during a proceeding held on December 11, 1978.

Comments on the proposal were submitted by individual lawn mower manufacturers, the lawn mower industry trade association, private testing laboratories, private inventors, individual consumers, and a consumer testing organization.

Because the Commission at this time is issuing requirements applicable only to blade contact injuries with walk-behind power mowers, only the comments (including late filed comments) pertaining to such requirements are being addressed at this time. Comments on other aspects of the proposal will be addressed when the Commission takes action on other requirements.

The principal issues raised by the comments, and the Commission's responses to the issues, are explained below under the heading of the section of the standard to which they apply. There is also an explanation of the instances in which the final standard differs from the proposal.

#### Scope of the Standard (§ 1205.1)

The industry trade association argues that the Commission has impermissably expanded the scope of the proposed standard as it applies to the blade contact hazard by describing the blade contact hazard as endangering both operators of mowers and bystanders. They argue that in the notice of proceeding the Commission described only the hazard of blade contact with the operator and that the notice of proceeding limits the Commission's authority to expand the nature of the hazard to be addressed.

The Commission does not agree that the section 7 notice of proceeding serves as a limitation on the Commission's authority to address the hazards associated with a consumer product in a standard development proceeding. In this instance, it is apparent that lawn mowers can present similar risks of injury due to blade contact to bystanders and operators. There is nothing in the CPSA that limits the Commission's authority to include in a proposed standard provisions that address a risk of injury not specifically described in a section 7 notice of proceeding but which are inherently related to the risk that was described. In any event, the Commission has not included separate provisions in the final standard to address the risk of injury to bystanders. The provisions of the final standard are intended to address the risk of injury to operators, but those provisions may also address any risk of blade contact injury to bystanders.

Several commentors state that the scope of the standard is too broad. They contend that mowers other than rotary mowers (such as reel-type mowers), 3 wheel mowers, high wheel mowers, mulching mowers, monofilament line mowers, and walk-behind garden tractors should not be included within the scope of the standard. It is their view that the Commission has not given adequate consideration to the effect of the requirements of the standard of these types of mowers. Several commentors also expressed the view that a maximum cutting width and/or horsepower should be specified to further delineate products within the scope of the standard because otherwise large horsepower walk-behind mowers or lawn and garden tractors might be considered to be within the scope of the standard.

For the reasons discussed below, the Commission has decided to limit the scope of the performance requirements of Subpart A of Part 1205 to rotary walk-behind power mowers which are equipped with a rigid or semi-rigid blade and which have a cutting width of more than 12 inches. Mowers with a cutting width of 30 inches or greater, a weight of 200 lb or more, and an engine of 8 hp or more are excluded from the standard. For reasons also discussed below, the labeling provisions of the standard apply to reel-type mowers of a similar size.

a. *Reel-type mowers.* After considering the question of whether the standard should apply to reel-type walk-behind power mowers, the Commission has decided not to apply the standard, except for the warning label provisions, to this type of mower.

The Commission believes that the economic and injury data presently available to it do not show that the risk of injury associated with reel-type mowers justifies applying the standard to reel-type mowers. Reel-type mowers constitute less than 1% of the walk-behind mower market, and thus consumer exposure to that product is not as great. In addition, the injury data associated with reel-type mowers that are available to the Commission indicate that injuries with these mowers comprise less than 1% of the injuries associated with walk-behind mowers (NEISS Power Mower Baseline Study, July-September, 1977). In view of the lack of injury data, the infrequent use of reel-type mowers, and the differences between reel-type and rotary mowers, reel-type mowers are not required to meet the blade stop time or shielding requirements of the standard. However, because Commission injury data does show that mower operators have contacted the moving blade of reel-type mowers, the labeling provisions of the standard apply to reel-type mowers in order to warn of the hazard of blade contact.

b. *3 wheel, 5 wheel, high wheel, and air supported mowers.* The Commission has included rotary 3 wheel mowers, 5 wheel mowers, high wheel mowers, or air supported mowers in the standard. The number of wheels or the use of an air cushion instead of wheels would appear to have little relevance to the likelihood of contact

with the rotating lawn mower blade. These mowers would present the same risks of blade contact as the common 4 wheel rotary mower. The Commission has considered the potential effects of the standard's requirements on these types of mowers. Especially since the final standard requires foot probing only at the discharge chute and at the rear 120° of the mower, the standard should not have an undue adverse effect on these mowers.

c. *Semi-rigid blade or rigid blade other than metal.* Most of the mower blades used today are made of metal. The Commission has been advised, however, that some persons are experimenting with rigid or semi-rigid blades made of material other than metal, such as plastic or heavy rubber. However, no convincing evidence has been presented to the Commission to show that these blades present a different risk of injury than metal blades. If these blades are rigid or semi-rigid, they appear to present an unreasonable risk of amputation, laceration, fracture, or avulsion in the same manner as metal blades. Blades typically rotate at a tip speed of approximately 200 mph, and a hand or foot struck by a semi-rigid or rigid blade made of material other than metal, that also cuts grass, can be expected to cause the same types of injuries as a metal blade. Therefore, the Commission believes that mowers with rigid or semi-rigid blades made of materials other than metal should be included within the scope of the standard.

d. *Nonrigid blades.* The Commission has not included nonrigid blades, such as those made of a monofilament line, within the scope of the standard. The Commission is aware that prototype mowers and at least one production mower have been developed that use a rotating monofilament line to cut grass. A monofilament line is different by its very nature from a rigid or semi-rigid blade. The Commission has not had an opportunity to evaluate whether this type of grass cutting mechanism presents the same risk of injury as a rigid or semi-rigid blade. However, the Commission believes that there may be sufficient differences in blade mass, stiffness, and/or sharpness between these mowers and mowers which use a rigid or semi-rigid blade that the Commission cannot presume that they present the same risk of injury. Therefore, the definition of "blade" as used in the standard has been revised to include only rigid or semi-rigid mechanisms.

The Commission intends to conduct an analysis of the injury potential associated with these blades as part of its ongoing investigation of lawn mower injuries. If appropriate, the Commission could take regulatory action in the future with respect to mowers with these flexible "blades".

e. *Mulching mowers.* One commentor suggests that mulching mowers should not be included in the standard because they lack a discharge chute, and, therefore, there would be no hazard of blade contact due to clearing the discharge chute. Mulching mowers are essentially the same as other rotary lawn mowers except for the absence of the discharge chute. Except for attempts to clear the discharge chute, blade contact with the hand can occur in the same manner as with other mowers, for example, while making adjustments to the mower or by inadvertent contact. In addition, foot contact with the blade can occur in the same manner as with other mowers, for example by pushing or kicking the mower with the foot, or by slipping or falling while mowing or by other inadvertent contact. Therefore, the Commission has included mulching mowers within the standard as long as they fit the definition of "rotary power lawn mowers."

f. *Maximum HP, weight, and/or blade width.* The Commission's standard for power lawn mowers is intended to address the unreasonable risks of injury associated with the mowers that are typically used by consumers around a residence or household. There are a number of mowers that, although falling generally within the definition of the term "consumer product," were not intended by the Commission to be included within the scope of this standard because of their relatively infrequent use by consumers, and the Commission has decided to exclude these mowers from the scope of the standard. These would include mowers that have a large cutting width, are extremely heavy, and have a large HP engine.

The requirements of the standard may affect these large mowers, and their manufacturers and users, differently. Most manufacturers of these mowers are smaller firms which produce a limited number of mowers for commercial and specialty purposes. The economic burden for these manufacturers could be greater than that for the manufacturers of the smaller mowers usually used by consumers since they must spread the cost of compliance over fewer production units.

Since the cost per unit would be higher, manufacturers might choose to drop models or leave the industry. The Commission is aware of only six manufacturers that produce walk-behind mowers that will not be covered by the standard. Availability of these large mowers might therefore be more severely affected than the availability of mowers in the smaller size categories where there are far more firms competing.

Accordingly, the Commission has decided to exclude from the standard's coverage mowers that have, in combination, a blade cutting width of 30 inches or more, a weight of 200 lb or more, and an engine of 8 hp or more. Mowers subject to the standard account for approximately 98% of all walk-behind mowers sold. These criteria were selected because few injuries have been reported for these larger mowers and because the Commission believes that such mowers are not typical of the mowers normally used by consumers. The Commission points out, however, that its decision to exclude these large mowers from the standard is not based on a finding that there is in fact no unreasonable risk of injury associated with these mowers. Accordingly, section 26 of the CPSA would not preclude state or local regulation of the blade contact hazard associated with mowers outside the scope of the standard.

EFFECTIVE DATE (§ 1205.2)

The proposed effective date provided that the standard would become effective 2 years after the final standard was issued. At that time, the blade of a walk-behind mower would have to stop within 5 seconds of the release of the blade control. Two years after that date (4 years after the standard was issued), the permissible blade stopping time would be reduced to 3 seconds. As explained below, the final standard applies to mowers manufactured or imported after December 31, 1981, except for the labeling requirement, which will apply to mowers manufactured after December 31, 1979. When the standard is effective, the blade of a walk-behind rotary mower will have to stop within 3 seconds of the release of the blade control actuating mechanism. The interim 5 second stopping time has been deleted in the final standard and the initial effective date has been lengthened, in order to avoid the need for industry to make more than one change and to achieve the protection of the three second time at an earlier date.

A number of commentors addressed the issue of effective date. Several manufacturers and the industry trade association commented that the proposed effective date of two years for most sections of the standard could not be met by the industry, or could only be met at great cost. Commentors claimed that since the entire industry would be retooling at the same time to meet the standard, tool and die shops would not have the capacity to meet all of the demands, and thus more time would be needed.

Some of the comments opposing the two year effective date indicated that

the portions of the proposed standard that concerned thrown objects or riding mowers would be especially difficult in terms of meeting a two year effective date.

Other comments indicated that prototype and production testing of newly developed mower designs would require two mowing seasons to accomplish.

One manufacturer requested that the effective date coincide with the beginning of the fall production season (usually between September 1 and October 1) and stated that the normal manufacturing and development time for a riding mower or garden tractor would be 2.5 years.

The industry trade association states that the average *normal* lead time is 44 months. They believe that compliance with the standard as proposed will take considerably longer than this because of the simultaneous tooling demands of the entire industry necessary to meet all the requirements of the proposed standard. Although they do not suggest in their written comment what the lead time should be, the implication is that 4 to 5 years would be necessary.

On the other hand, the consumer testing organization argued that two years is adequate for the industry to achieve a three second stopping time. In addition, it argued that warning labels and other provisions of the standard that are similar to present voluntary standards should become effective in less than one year.

A brake-clutch manufacturer recommended that a two second blade stopping time be set to become effective two years from the date the final standard is issued.

In evaluating these comments, it must be kept in mind that the performance requirements of the standard that is being issued are intended to address only blade contact hazards for walk-behind rotary mowers. As a result, manufacturers will not have to make nearly so many changes at one time as they would have had to with the proposed standard.

The Commission contracted with Battelle Columbus Laboratories for an analysis of the anticipated economic impact of the proposed standard. Pages 88-92 of their report entitled "Economic Impact Analysis of Proposed Safety Standard for Power Lawn Mowers," dated December 30, 1976, explains the basic factors considered by the Commission in making its decision on the effective date. The Commission concurs with the report's conclusions that are relevant to the blade contact provisions that are being issued at this time. Even though the report is over 2 years old, there have been no changes that would affect the relevant conclusions in the report.

The report points out that among the various firms in the industry there is a wide variance in the engineering capabilities and access to financial capital required to make the changes necessary to comply with the proposed blade contact requirements. There is also a disparity in the degree to which existing mowers already comply with the proposed blade contact requirements. The largest firms in the industry have engineering staffs and the financial capital to produce complying mowers with shorter lead times. Smaller firms may have to rely heavily on their suppliers for both safety-related components and the engineering expertise to incorporate them in their designs. Another factor that could affect the effective date is the delays that could be caused by a large number of orders being placed simultaneously with tool and die makers by mower manufacturers and suppliers to the mower industry.

Battelle estimated that given these considerations, the time required for making changes to achieve compliance for a typical walk-behind mower with the comprehensive proposed standard would be 21-30 months or more. Most firms they interviewed felt that a minimum of two years would be required to achieve compliance, assuming that the effective dates coincide with the start of a model year. The Commission has reviewed the Battelle report and agrees with its conclusions concerning the effective date.

As noted by one commentor, production for a model year usually begins about September 1 of the previous year. Therefore, manufacturers will have about thirty-one months before normal production would begin for the model year in which the standard becomes effective. The data available to the Commission indicate that the industry can make the necessary changes by that date. However, the additional 4 months until December 31, 1981, are available if manufacturers encounter unexpected difficulties.

The Commission believes that the 4 or 5 year lead time suggested by some of the comments is clearly excessive, especially since the provisions of the standard address only blade contact injuries, rather than the broader provisions of the proposal. Substantial research has already gone into ways to comply with the provisions of the proposed standard. At this time, at least three manufacturers are making brake-clutch units that appear to comply with the 3 second blade stop requirements of the proposed standard, and patent activity in this field has been strong. The solving of these difficulties by a least three manufacturers indicates that the maximum lead time is not required.

On the other hand, the two year effective date suggested is not believed to be practical. Some manufacturers will have to make major changes to their mowers to comply with the standard. A short effective date could also cause major bottlenecks in the production of safety-related components, and there could be shortages in the number and types of mowers available to consumers. The retail price impacts on consumers would be higher than with a longer lead time, and the number of firms (especially small firms) that could be forced out of business by an inability to meet the effective date could be increased.

Based on a balancing of (1) the need for the standard in order to reduce the risk of injury associated with walk-behind mowers and (2) the possible adverse economic effects caused by the shorter effective dates, the Commission has decided that the standard should become effective December 31, 1981. A detailed discussion of the economic costs associated with this effective date is contained in the Battelle analysis referred to above. It is expected that for this effective date, the adverse effects described above for a two year effective date would be substantially mitigated. Manufacturers should have had enough time for field testing, and the supply of walk-behind mowers should be adequate to meet the demand. Individual mower manufacturers may initially have less varied lines than at present, but there should be no decrease in the types and features of mowers available to consumers. For one example, one manufacturer might choose initially not to provide an 18 inch model and another might choose not to provide a 22 inch model, but each type would probably still be available to the consumer. This time frame makes an allowance for the difficulties involved in redesigning, testing, and tooling for a complete new line.

On the other hand, the Commission agrees with the comments that the labeling requirements can be complied with in one year with no undue adverse economic impact attributable to the shorter effective date. This is because the required label can easily be incorporated into production within this time. In addition, most manufacturers are currently providing a label and will need only to change the form of the label. Accordingly, the labeling requirement is being issued to apply to reel and rotary mowers manufactured after December 31, 1979. (This labeling requirement is issued under the authority of both section 7 and section 27(e) of the act.)

For the reasons given above, the Commission finds that the December 31, 1981, effective date for the performance requirements of the stand-

ard and the December 31, 1979, effective date for the labeling requirements are in the public interest. The Commission also finds, for the reasons given above, that good cause exists for having the effective date for the performance requirements be December 31, 1981, and for the labeling requirements be December 31, 1979, rather than the 180 day limitation on the effective date that would normally apply because of section 9(d) of the CPSA.

As is discussed in more detail in section F-§ 1205.5d.(5) of this preamble, the lawn mower industry is currently engaged in an effort to develop hand probes that could be used to determine whether the mower blade is accessible during activities that can be expected to take place around the mower. Their hope is to develop probes, and test procedures for their use, which would be suitable for inclusion in the mandatory standard and provide an alternative to the standard's blade stopping time requirement. The industry has estimated that it will take another 4 months to develop the probes and test procedures.

The Commission cannot predict whether this development effort will ultimately be successful or whether mowers that embody an adequate degree of safety and utility can be built under such alternative requirements. (For a discussion of the feasibility of probe requirements, see *Industry trade association probes* below.) However, the Commission does believe that it would be highly desirable if alternative requirements could be developed that would provide an adequate degree of safety with a potentially lower cost than may be required by the blade stopping time requirement. Accordingly, the Commission has authorized its staff to cooperate with the industry development effort and to expedite analysis of the results of the industry effort to determine if the probe requirements are suitable for inclusion in the mandatory standard.

At its meeting on January 25, 1979, at which a draft of the final rule prepared by the staff was considered, the Commission discussed the possibility of delaying the effective date of the standard. The issue was whether the industry probe development effort could be completed, and the results assessed, before firms would need to begin their development of designs that comply with the Commission's final standard. After considerable discussion, a majority of the Commissioners concluded that to achieve the goal of reducing injuries at the earliest possible date, it was not appropriate to extend the effective date of the standard before the results of the development effort are even known. The majority noted that if the extension were granted now, and the probe development effort were to fail, the public would have been needlessly denied the opportunity to purchase safer mowers for use in the 1982 mowing season. The majority also noted that not all mower manufacturers would have to begin developing designs in the next six months in order to comply with the final standard. Moreover, for any that did, the costs incurred in the first six months would not be very large, as it is likely that they would be incurred mainly for drafting system and component redesigns and perhaps beginning the construction and testing of prototypes of modified units. The largest costs are associated with actual retooling, and those would not be incurred until after the Commission has time to evaluate the probe development effort and determine whether a stay is warranted. Finally, while six months should be adequate for the industry to demonstrate whether it can develop a useful probe test, more than six months, and perhaps as long as a year, would be needed before the probe could actually be incorporated as an alternate requirement of the standard. Therefore, the Commission stated that it encouraged the industry to continue the effort and that, if the results of the development effort warrant and if it appears necessary, serious consideration will be given to an appropriate extension of the effective date at the time the Commission analyzes the development results. The Commission also stated that it would allot resources for the staff to work with the industry in its efforts.

The Commission also pointed out that section 10 of the CPSA provides a procedure for petitioning the Commission to amend or revoke a standard. Any party who believes there are suitable alternatives to the Commission's final standard can petition the Commission to adopt them. The Commission believes that petitions to amend the standard are the most appropriate way to consider alternatives to the standard that may be developed in the future.

In order to facilitate the consideration of alternatives and other changes to the standard, the staff had suggested a procedure for reconsideration of the standard that would have involved a 45 day stay in the issuance of the standard while petitions for reconsideration were considered. The Commission decided that this procedure was not suitable for the lawn mower standard, however. In the first place, the reconsideration procedure has a considerable potential for substantially delaying the issuance of the standard while the petitions are being considered. Second, the Commission believed that it would not be appropriate to introduce a new and complicated procedure in a particular proceeding without extensive consideration of how the procedure might be generally applicable to other rules that will be issued by the Commission.

For the reasons given above, the Commission has decided that the best way to consider possible changes and alternatives to the standard is through the petition procedure established in section 10 of the act and not by a delay in the effective date or by reconsideration procedures.

DEFINITIONS (§ 1205.3)

Because the standard being issued at this time applies only to blade contact injury from walk-behind rotary mowers, only definitions applying to these mowers are being issued, and only those comments addressing definitions applicable to blade contact with these mowers are discussed at this time.

One commentor suggests that the Commission "harmonize" the definitions in the mandatory standard with those in the voluntary industry standard, ANSI B71.1-1972.

When developing its definitions, the Commission reviewed the definitions of ANSI B71.1-1972 and where feasible made the definitions in the mandatory standard consistent with those of the voluntary standard in order to minimize any confusion that might result from the terms used in the mandatory standard.

a. *Maximum operating speed.* A commentor suggests that the definition of "maximum operating speed" as proposed at § 1205.2(a)(13) be revised. The definition as proposed by the Commission reads as follows:

"'Maximum operating speed' means the maximum rpm obtainable by the engine or motor under the conditions of the particular test where the term is used."

The commentor recommends that the term "governed" be inserted prior to "rpm" and that the following language be added to the definition to address mowers other than gasoline mowers:

"For an electrically-powered mower the speed attained when the mower is energized from 120 volts, 60 Hz, through a 100-foot, 16-gage extension cord. For a battery-powered mower, the speed attained with the battery fully charged at the start of the test."

The term "maximum operating speed" is used in the final standard as a condition for testing blade stopping time. The mower is required to be tested when it is in the condition in which it is intended to be used. If a mower power source is equipped with an integral governor designed to automatically limit the maximum speed attainable by the motor or engine, the mower would be tested at the maxi-

mum "governed" rpm obtainable. However, a mower may not be equipped with an integral governor. Its operating speed may be controlled by a variable speed control device or throttle, by adjustments to the fuel mixture, or by other means. Adding the word "governed" could, therefore, confuse the intent of this definition by leading persons to believe that the mower could be tested at less than the maximum obtainable rpm. Since this result is not intended for mowers without an integral governor, the suggested change has not been made in the definition.

In regard to the suggested addition for electric mowers, the use of an extension cord poses potential problems of test reproducibility. In addition, if the Commission were to specify a particular voltage, as suggested by the commentors, the definition would not take into account variations in the voltage that may be available at the testing facility. The Commission agrees that language should be added to take into account (1) the dropoff in voltage that occurs when an extension cord is used with electric mowers and (2) variations in voltage itself. Therefore, the Commission has added language to the definition of "maximum operating speed" for extension cord powered electric mowers to specify that the voltage supplied to the mower shall be in a range that is commonly found at residential branch-circuit outlets (115 V to 120 V). This will allow for a reasonable range of variation in the supply during the test. The following language has been added:

"For an electrically-powered mower, [maximum operating speed] is the speed attained when the mower is energized from a 60 Hz alternating current source that delivers a voltage no greater than 120 V and no less than 115 V at the power input to the mower with the mower running."

The commentor's suggested revision for a battery powered mower was intended to provide a clearer definition of the blade stopping time test, but it could be subject to differing interpretations of "fully-charged". To reduce that possibility, the following language has been added to the definition:

"For a battery-powered mower, it is the speed attained after the battery has been fully charged in accordance with the mower manufacturer's instructions."

The revised definitions of "maximum operating speed" appear in § 1205.3(a)(8) of the final standard.

b. *Mulching mower.* A commentor expresses the view that the definition of "mulching mower" in proposed § 1205.2(a)(15) is unclear.

The term "mulching mower," although defined in the proposal, did not appear in the blade contact provisions of the proposed standard. Therefore, there is no need to define the term in the standard that is being issued at this time. It should be noted that the standard applies to all "rotary mowers" as defined in the standard. To the extent that a "mulching mower" is a rotary mower, it would be covered by the standard.

c. *Operating control zone.* A commentor states that the term "operating control zone", defined in proposed § 1205.2(a)(17)(i) (final § 1205.3(a)(11)), is unnecessarily restrictive and imposes unwarranted design limitations on the placement of manual restart controls. The commentor contends that because of the effort required to start the mower and because of the potential effects of recoil, placing starting controls in the proposed operator control zone could make the mower unstable or cause the operator to move out of the operator control zone while starting. The comment concludes that the measuring cylinder needs considerable expansion.

From Commission injury data, it is estimated that over 2,000 injuries are treated in hospital emergency rooms each year due to foot contact with the mower blade when the mower is being started. The operating control zone and its related requirement were conceived in order to keep the operator away from the blade if the blade begins to rotate when the power source is started. This degree of separation is necessary to accomplish the safety-related purpose, and mowers currently marketed could easily meet this requirement. It should be noted that mowers whose blades start rotating when the power source is started are almost certainly going to be engine kill blade control mowers that are required to have a power restart mechanism. Therefore, effort and recoil should present no problems. In any event, the Commission believes that manufacturers have the capability of complying with the requirement without introducing additional safety problems of the type referred to in the comment. Any particular designs that could result in injury because of recoil or other factors could be subject to corrective action under section 15 of the CPSA.

d. *Rotary mower.* One commentor recommends a change in the definition of "rotary mower", which was defined in the proposal (§ 1205.2(a)(22)) as follows.

"'Rotary Mower' means a power lawn mower in which one or more cutting blades rotate about at least one vertical axis."

The commentor suggests that the definition be changed to read:

"Rotary Mower means a power lawn mower in which one or more cutting blades cut grass *by impact of rotating blades on free standing grass.*"

The commentor states that the Commission's proposed definition could result in certain mowers that are not rotaries, such as sickle mowers, being considered as rotaries.

The Commission agrees with the basic principle behind this comment but believes that safety-related characteristics of the type of mower referred to by the term "rotary" can be better described by being more specific about the type of rotation involved rather than by whether the grass is free-standing. Accordingly, the phrase "in essentially a horizontal plane" has been incorporated into the definition. It should be noted that the definition used in the standard appears in the February 1975 Federal Specification 00-M-1243A, Mower, Lawn, Power (Heavy Duty, Institutional, Rotary, 21 inch, Gasoline Engine Driven). This specification was approved by the Federal Supply Service, General Services Administration, for use by all Federal agencies. It is, therefore, a definition known to professionals associated with the mower industry. Accordingly, the definition has been modified as described above, and the revised definition appears in § 1205.3(a)(14). The Commission does not interpret this definition as applying to sickle bar mowers.

e. *New definitions.* One commentor recommended clarifying the terms "crack," "deform," and "separate" in the shield strength test. These terms, as well as the term "stress," have been defined in the final standard at § 1205.2(a), (3, 5, 15, and 17).

f. *Blade.* The definition of "blade" that appeared in proposed § 1205.2(a)(2) has been changed to include only a rigid or semi-rigid device. This change was made because nonrigid blades are not covered by the final standard, as explained above under *Scope of the standard.* The revised definition appears in § 1205.3(a)(1) of the final standard.

WALK-BEHIND ROTARY POWER MOWER PROTECTIVE SHIELDS (§ 1205.4)

a. *Foot probe.*—1. *Area of probing.* Section 1205.3(a)(1) of the proposed standard required that walk-behind mowers be able to pass a foot probe test. The foot probe requirement and test were intended to address potential injuries to the operator's feet caused by contact with the rotating blade during lawn mowing operations. The proposed foot probe test consisted of probing around the entire periphery of the lawn mower with the foot probe specified in British Standard BS 5107, "Specification for Powered Lawnmowers", April 1974 (the UK probe). The proposed test required that the probe be inserted under all points of the bottom edge of any shields (including the housing). The test is

passed if the probe does not enter the path of the blade or cause any part of the mower to enter the path of the blade.

Commentors stated that since the foot probe test is designed to address injuries to the mower operator's feet caused by contact with the rotating blade, and since the proposal would require walk-behind mowers to be equipped with a blade control system that stops the blade when the operator leaves the operating position, there is no need to probe the entire periphery of the mower. They point out that if the blade stops shortly after the operator leaves the operating position, then the risk of foot contact with the rotating blade in positions that are not accessible from the operating position will be addressed by the blade stop provision. The commentors, therefore, suggest that only the rear periphery of the mower should be probed. The Commission generally agrees with these comments.

The blade control system and foot probing were originally conceived as separate requirements, with the former intended to address hand injuries and the latter intended to address foot injuries. However, the Commission has since analyzed all the cases reported to it through December, 1977. These cases show that the blade stopping requirements should eliminate or greatly reduce injuries occurring after the release of the blade control device. Therefore, only injuries occurring when the mower handle has not been released need to be addressed by the foot probing requirements. The great majority of such foot injuries occur at the rear of the mower. Therefore, at § 1205.4(a)(2)(1)(B) of the final standard, the Commission has reworded the foot probing requirements to limit the area to be probed to that in which known injuries occur. This is the area within 60° of either side of the centerline at the rear of the mower and the discharge chute.

The three-month representative sampling of mower injuries in 1977, mentioned above, demonstrated that operators who are holding the mower handle can and do contact the mower blade through the discharge chute while performing routine mowing operations.

A requirement that the rear and discharge chute pass the foot probe test, in combination with the blade stop requirement, will address virtually all blade contact foot injuries (CPSC memoranda dated August 4, 1978 and October 26, 1978).

Anticipating that the Commission might only require foot probing at the rear of the mower, one commentor states that limiting foot probe testing to the rear of the mower will not protect bystanders. However, bystander foot injuries do not represent a substantial injury pattern. As of January, 1978, the Commission had received only four reports of injury to the foot of a bystander. One of these four might have been prevented by a 360° foot probe requirement (CPSC memorandum, January 30, 1978). However, the Commission does not believe that such a requirement can be justified by the injury data concerning blade contact injuries to the feet of bystanders. Nevertheless, once a mower user leaves the normal operating position, the blade will stop, and, to that extent, bystanders will be protected by the standard.

2. *Nature of Probe.* Many of these same commentors complained about the use of the UK foot probe and about the fact that the test procedure of the proposal differs from that in the British Standard from which the UK foot probe is derived. They stated that the mower industry has had virtually no experience on production units with the UK probe and needs time to evaluate it. They also stated that over 80% of the walk-behind mowers tested by the National Bureau of Standards (NBS) failed the test and that mower housings would have to be redesigned. They also state that if shields have to be added to the sides and front of the mower there will be an adverse effect on product performance. Specifically, they argued mowers would be 3 times harder to push and would not be able to mow close to walls. The commentors did not provide any data to support their claims.

Two commentors suggest that the worst case for a foot probe test should be used in the standard. They suggest the worst case is represented by a foot smaller than that represented by the UK probe in the proposed test. Two other commentors suggest the UK probe is excessively severe.

NBS analyzed 3 existing foot probes—ANSI, CU and UK. It determined in a study (NBSIR 77-1294, Power Lawn Mowers: Evaluation of Anthropometric Foot Probes) that, of the probes tested, the UK foot probe most closely represents a human foot. The commentors have not disputed this conclusion. Insofar as the test procedure is concerned, the UK procedure consists of inserting the probe under the housing and raising the probe while keeping the bottom of the probe parallel with the supporting structure. The test procedure called for in the proposal was developed by CU and consists of inserting the probe as far as possible with an insertion force of not more than 4 lb. under the bottom edges of the blade housing and shields and then pivoting the toe of the probe upward around the heel as much as possible as the probe is withdrawn.

After considering the available injury data, the Commission concludes that the test procedure in the proposal is representative of the ways that injuries actually occur. The decision to use the UK probe instead of the other available probes is supported by the findings reported in NBSIR 77-1294. 127 males and 74 females ranging in age from 9 to 66 years participated in the study. Tests were run on each participant, with and without shoes, to determine the path the foot would take when inserted into various height openings, rocked back on the heel and then withdrawn. These data were then compared to similar data obtained by repeating the tests using the CU, ANSI, and UK probes. This procedure essentially duplicates the procedures in the final standard. These tests showed that, while none of the probes would have completely protected any of the participants of the study, the UK probe test data most closely approximates the human foot data. Therefore, use of the UK probe in the manner required by the test procedure in the standard will provide the best available representation of the behavior of the human foot (with or without shoes) and will provide a higher degree of protection than the ANSI probe and procedure or the CU probe. As far as the procedure used in British Standard BS 5107 (the UK probe), analysis of the data gained through the NBS study mentioned above shows that the critical difference between these probes and the human foot is the flexibility of the human foot (with or without shoes). The NBS study shows that rotating the UK probe about its heel provides the best available simulation of the possible action that can be done by the human foot.

The NBS study discussed above showed that a probe based on the 95th percentile test data would be needed to provide greater protection than that afforded by the UK probe. It also showed that the UK probe would not have protected all of the test subjects all of the time. Obviously, it would be possible to make the foot probe, and therefore the standard, more or less severe. The Commission, however, believes that mowers which comply with the foot probe requirements of the standard will be significantly less hazardous than ones which would not comply. While a more severe probing requirement would somewhat increase the level of safety afforded by the standard, the delay in issuing a standard that is inherent in developing such a probe would not be warranted. The foot probe requirements of the final standard will substantially reduce or eliminate foot injuries occurring at the rear of the mower and at the discharge chute.

In regard to the comments that 80% of all walk-behind mowers would fail the proposed foot probe test, it should be noted that NBS only tested 6 mowers, of which one mower passed the proposed 360° foot probe requirements, and one cannot draw sound conclusions from these tests concerning the percent of all mowers that would pass the proposed probe test. In addition, these NBS tests consisted of 360° probing of the mower. As discussed above, the standard now requires probing of only the rear of the mower and the discharge chute. In addition to the mower that passed the 360° probing test in the NBS study, another mower field tested by GSA (see brake-clutch reliability comments below) will pass the foot probe test in all areas except for one point at the front of the mower midway between the front wheels. Moreover, when these mowers were tested by GSA, they were not found to be hard to push or inconvenient to use. Rather, they were found to cut grass with no loss in cutting performance. Since the GSA test included extensive field tests of 50 mowers, the conclusions of the users on the performance of the mowers are significant.

Some of the comments seem to assume that the only way to meet a 360° foot probe requirement would be to lower the periphery of the mower housing. However, the mower tested by GSA, discussed above, clearly shows other means can be used. This mower used shields around the housing.

As noted above, the voluntary standard (ANSI B71.1-1972) requires a rear trailing shield and probing of the discharge chute. It is anticipated that most mowers that comply with the ANSI standard will be able to meet the foot probe test of the final standard with modifications that involve little or no decrease in mowing utility. Thus, it appears that the concerns of the mower industry with the foot probe test are unfounded and, in any event, have been largely addressed by the change in the requirement providing for probing only the discharge chute and the rear periphery of the mower.

One commentor suggests that the foot probe is unrealistic because the probe represents a bare foot. However, as discussed above, the data obtained in the NBS study show that the UK probe provides the best state-of-the-art measurement of the accessibility of the rotary mower blade to the human foot (with or without shoes). Further, it should be noted that during the NBS study (NBSIR 77-1294), the British Standards Institution, which developed the UK probe, was contacted. They indicated that the design of this probe is based on the dimensions of the size of shoe most commonly worn by adult males. The probe is a composite designed to provide a reasonable degree of safety and reasonably represent a human foot. The NBS study confirms that the objectives of this design were attained.

Several commentors indicated that the wording of the proposed foot probe test procedure at § 1205.3(a)(2)(B) needed to be clarified to eliminate ambiguity and misunderstanding. Specifically, they felt that, as proposed, the procedure could require insertion of the probe at an unrealistic number of points.

This comment has merit. The wording of the requirement and procedure has been changed accordingly. The requirement now states that the mower must be capable of compliance at any point within the area to be probed rather than that the probe must actually be inserted at all points under the housing.

The test also states that, during insertion, the sole of the probe is to be kept in contact with the supporting surface and that insertion shall stop when the housing lifts or the horizontal force on the probe reaches 4 lb. A comment contends that the insertion force requirement is unclear. However, the Commission believes the requirement is clear as proposed. The requirement means that the 4 lb force is a maximum force, not a constant insertion force and that shields should not be raised up during the test unless the design of the shield is such that it naturally rides over the probe during insertion. Thus, if the shield was preventing the probe from entering the blade path during the test, insertion would stop at the specified force level.

One comment suggested that it was not fair to mower manufacturers to require that mowers be tested by the foot probe both with and without a grass catcher (if one is made by the manufacturer for use on the mower), when makers of after-market grass catchers are not required to perform similar tests on their grass catchers.

The requirement was included in the proposal to insure that grass catchers made and sold by mower manufacturers specifically for their mowers would not negate the protection of the standard's foot probe requirements. Upon consideration of this comment, however, the Commission concludes that the requirement is unnecessary. Presently produced mowers are apparently no more hazardous with the grass catcher installed than without it. The Commission cannot predict that mowers that are unsafe with grass catchers installed may be produced in the future. In addition, product liability considerations may prevent either accessory or original equipment manufacturers from recommending the use of their grass catchers with mowers that will not pass the foot probe test with the grass catcher installed. For these reasons, the Commission cannot presently conclude that the risk of injury from unsafe mower-grass catcher combinations is sufficient to warrant a mandatory requirement in this area. However, the Commission will continue to monitor the injury data associated with power lawn mowers after the effective date of the standard, and if injuries are being caused by the use of grass catchers, the Commission could consider amending the standard to include these products.

b. *Terrace test.* Section 1205.3(a)(1)(i) of the proposal included a "terrace test." This test was designed to protect against foot contact with the blade when the mower is pushed across a transition from a horizontal surface to a lower inclined surface. Several commentors state that this test fails to realistically portray actual mowing conditions. They suggest several changes in the test to correct the problems they discuss.

The Commission has considered the comments on the terrace test and decided to delete the entire test. The test was developed by the offeror to simulate the action of the mower as it traverses from a level to an inclined surface. This action tends to raise the rear of the mower. Probing the rear under these conditions is a more severe test than probing on level ground. However, analysis of the injury investigations in the Commission's files did not reveal any clearly defined incidents of foot injury while the mower was traversing from a level to an inclined surface. The absence of injury data is the prime reason for deleting this requirement. Also, an investigation of the curvature found on residential slopes indicated that the curvature used for the terrace test in the proposal was too severe. While a fixture using more realistic curvature was not constructed by the Commission, engineering judgment indicates that such a more realistic fixture would be a less severe test than the proposed terrace test. Thus, the theoretical decrease in safety resulting from deleting this test is further minimized.

c. *Obstruction test.* Section 1205.3(a)(2)(ii) of the proposed standard required mowers to pass an obstruction test. This test consisted of pushing a mower across a depression in the ground and over a raised obstacle and then pulling the mower backward over the obstacle and depression. In order to pass the test, no more than one wheel at a time could be lifted from the fixture surface, no shield could stop the mower as a result of contact with the raised obstacle, and no shield could enter the blade path.

Several commentors express concern with the obstruction test requirement that the raised obstacle not stop the mower by interfering with any shields. The commentors state the Commission included this provision to prevent a design which would cause a nuisance or inconvenience to the user. They state that the mower would not present a hazard to the user unless the offending shield was removed. They contend that if a user removes a shield because of its inconvenience, the user has assumed the risk of any resulting injury, and therefore the requirement does not address an unreasonable risk of injury.

In enacting the CPSA, Congress found that the "complexities of consumer products and the diverse nature and abilities of consumers using them frequently result in an inability of users to anticipate risks and to safeguard themselves adequately" (15 U.S.C. 2051(a)(2)). The CPSC was created to protect consumers against unreasonable risks of injury "asssociated" with consumer products. The term "associated" was used in the act to "convey the fact that the risk of injury did not have to result from the 'normal use' of the consumer product but could also result from such things as 'exposure to or reasonable foreseeable misuse of the consumer product' " 92 Cong. Rec. S18199 (daily ed. October 14, 1972) (remarks of Senator Moss). The Commission concludes that it is reasonably foreseeable that consumers will intentionally remove a shield (for example a rear trailing shield), if the shield prevents them from pulling a mower backward or pushing it forward. Indeed, a number of the consumer comments on the proposed standard make the point that consumers will remove rear trailing shields if they adversely affect the utility of the mower. The requirement of the obstruction test that shields shall not stop a mower from going over the raised obstacle ensures that the standard will not needlessly have an adverse effect on the utility of the mower.

The fact that a consumer's actions might fall within the tort liability concept of "assumption of risk" would not prevent the existence of an "unreasonable" risk of injury associated with the product. The Commission's injury data show that the large majority of foot contact injuries that occur while the operator is in the normal operating position take place at the rear periphery of the mower. If shields used on a mower will not pass the obstruction test, it is reasonably foreseeable that consumers would remove the shield. Because such action is reasonably foreseeable use or misuse of a mower, the Commission has the authority to address such action in a manatory standard.

However the risk of injury resulting from removal of the shield is not the only reason for requiring the obstruction test. The Commission's injury data disclose that mower operators have been injured when the mower is suddenly stopped by surface irregularities, causing the operator to stumble or become unbalanced and thrust a foot into the blade.

Therefore, since the obstruction test addresses a known hazard and since it addresses the unreasonable risk of the removal of safety devices, it is included in the final standard.

d. *Handle and upstop requirements.* Another commentor states that the structural requirements for walk-behind mower handles, and the associated tests as proposed at § 1205.3(b), are not justified. The commentor states that he is unaware of any injury data involving structural failure of a mower handle and does not see how any injuries associated with mowers will be reduced or eliminated by these provisions. He also points out that manufacturers of walk-behind mowers are now voluntarily meeting the criterion of the proposed requirement concerning the distance of handles from the rear of the mower. For the reasons given below, the Commission has decided to delete the handle strength and upstop requirements.

The handle requirements were proposed because the mower handle could create a hazardous situation if it fails structurally or allows an operator to come too close to the blade. These requirements were felt to reasonably ensure that hazardous situations would be prevented. Still, the commentor is correct in observing that Commission data does not clearly demonstrate that mower handles have contributed significantly to injuries.

The ANSI B71.1-1972 voluntary standard contains provisions requiring an upstop which limits the horizontal approach of the handle to the blade to 17 inches. The ANSI B71.1b-1977 supplement contains a 50 lb static force structural test of the handle. While similar to the Commission's proposed requirements, these provisions are less stringent. First, the voluntary standard does not contain a rocking test. The force level used in the voluntary standard is lower than the force proposed by the Commission, and the voluntary requirement only requires that the 17 inch distance is maintained after removal of the force. The Commission's proposed procedure required that the separation from the blade be maintained during the time the force is applied to the handle. These are significant engineering differences. However, as stated above, the Commission has limited data directly associating handle failure with injuries. These voluntary standard requirements were updated and approved in May 1977. The Commission has no reports of injuries caused by a handle that would pass the voluntary requirements but fail the proposed Commission requirements. For these reasons, the Commission has not included the handle or upstop requirements in the final standard.

e. *Movable shields.* Several commentors indicated agreement with the intent of § 1205.3(a)(3) of the proposal that movable shields shall not be removable without the use of tools, that a coin is not a tool, and that shields which are movable for the purpose of attaching auxiliary equipment shall automatically return to their previous position when the equipment is removed. However, they felt that the requirement was design restrictive in that it did not allow manufacturers to use a control to prevent the blade from operating when the shield is not in place. Since this type of blade control would also adequately protect the user from injury, the Commission has decided to allow either such a blade control or a movable shield which automatically returns to its intended position. The revised requirement appears in § 1205.4(c) of the final standard.

The proposal's requirement that shields be removable only with tools, and that a coin would not be considered a tool for this purpose, was intended to discourage consumers from removing the protective shields. A comment suggested that this requirement could result in a decrease in safety to consumers by also discouraging consumers from reinstalling shields after they are removed. The Commission does not know the extent to which users might remove shields with tools and not reinstall them. After considering this comment, however, the Commission concludes that there is insufficient data to support a mandatory requirement in this area, especially in view of the fact that the voluntary ANSI Standard B71.1-1972 requires that the shields not be removable without tools. Accordingly, the proposed requirement that shields not be removable without tools is not included in the final standard.

f. *Shield strength requirements.* Several commentors found the shield strength requirements at § 1205.3(a)(1)(ii) to be ambiguous and unclear. Of particular concern was the implication in the proposal that the mower housing would have to be subjected to the strength test. The commentor felt that was unnecessary and alleged that no known housing would fail such a test.

The Commission agrees that the housings of presently produced

mowers appear to be adequately strong and present no unreasonable risk of injury due to weak housings. The Commission also notes that the voluntary standard, to which most presently produced mowers conform, includes a structural integrity test for the housing. Accordingly, the mower housing need not be tested in accordance with the shield strength requirement, which appears at § 1205.4(a)(2) of the final standard issued below.

WALK-BEHIND ROTARY POWER MOWER CONTROLS (§ 1205.5)

a. *Background.* Section 1205.5 of the proposed standard included requirements for blade controls for walk-behind mowers. The proposed blade control system would (1) prevent the blade from operating unless the operator activates the control, (2) require that the operator be in continuous contact with the control in order for the blade to continue to be driven, and (3) cause the blade to stop within a specified time after the operator releases the control. The effect of these requirements is that when the operator lets go of the mower handle, the blade will stop before the operator's hands or feet can come into contact with the mower blade when the operator approaches the blade area to perform a task such as clearing the path of the mower, attempting to clear a clogged discharge chute, adjusting the wheels, emptying a grass catcher, or making other adjustments to the mower. The injuries that occur due to operator hand and foot contact with the rotating blade include lacerations, amputations, avulsions, and other injuries. The blade control system also will protect against foot contact injuries in areas of the mower other than the rear periphery. As discussed below, the requirements also would address some blade contact injuries to bystanders.

The Commission estimates that about 77,000 injuries due to contact between a mower operator and the rotating blade occur each year and that over 30,000 of these are treated in hospital emergency rooms (NEISS Power Mower Baseline Study, July-September, 1977). Although a voluntary industry standard has been in effect since 1972 and was last upgraded in 1977, the provisions of that standard do not directly address injury due to contact between a mower operator's hands and the rotating blade. According to the industry trade association (the Outdoor Power Equipment Institute or OPEI), the incidence of blade contact injuries at the discharge chute has not been reduced by the voluntary standard (OPEI letter dated December 16, 1976, p. 23). An analysis of injury data by OPEI also indicates that, for mowers that comply with the voluntary standard, the number of blade contact injuries occurring while the operator is outside the normal operating position is increasing, although OPEI has said that this result is anomalous. The Commission estimates that the blade control requirements of the standard will eliminate or reduce the severity of over 18,000 injuries treated in hospital emergency rooms each year (NEISS Power Mower Baseline Study, July-September, 1977).

b. *Miscellaneous comments.* One commentor objects to the proposed blade control system and suggests that requiring that a mower operator's hands both guide the mower and engage a blade control could create a hazardous situation, such as difficulty in negotiating a steep hill. No evidence supporting this commentor's concern was submitted. The Commission believes that, on the contrary, to safely operate a mower the operator should firmly grip the handle. The blade control system would not prevent the operator from doing so, and an operator who is firmly gripping the handle should have no difficulty also holding the blade control. The Commission notes that some presently manufactured self-propelled mowers have controls which the operator must hold while operating the mower, and no information concerning hazards associated with this type of control has been reported to the Commission.

One commentor states that a blade stopping control will not protect bystanders since such a control is dependent on operator actuation. As of January, 1978, the Commission had 10 investigation reports on file involving bystanders injured by the blade of a walk-behind mower. Half the injuries in these reports involved children being injured from unattended running mowers (CPSC memorandum, January 30, 1978). A blade control would prevent such injuries since the blade would not be rotating when the operator is not present. For the remaining injuries, the operator would have to release the control in order for a bystander to be protected. Since such bystander injuries do not represent a substantial injury pattern, and since some bystander protection is afforded by a blade control system, the Commission has not expanded the blade contact requirements of the standard to provide additional bystander protection.

Another comment points out that § 1205.5(a)(2) of the proposed standard is unnecessary. This section stated that a self-propelled mower with a traction control that inherently performs the function of the blade control need not have a separate blade control system. The commentor stated that the statement is unnecessary since the standard clearly does not require a dual system. The Commission agrees and has not included this provision in the final standard.

One commentor says that the blade control requirement should be revised to require that the control which stops the mower blade also stop a self-propelled mower from traveling, in order to address the potential hazard of striking a bystander. The Commission is not aware of any blade contact injuries to bystanders in which the travel of a self-propelled walk-behind mower was a significant contributing factor. Therefore, the Commission has not included the suggested requirement.

c. *Performance versus design requirements.* A number of mower industry commentors state that blade control system provisions of the proposal, which require the blade to stop within a specified time after the blade control lever is released, are design restrictive. They argue that the blade stop time requirement is only one acceptable way to address the potential hazard of contact with the rotating blade. The commentors suggest that the Commission should develop and propose "performance" requirements which would allow solutions such as blades that are inaccessible or that are relatively harmless. These commentors argue that by mandating blade stop time requirements, the Commission will stifle innovation and discourage manufacturers from developing alternative ways of making lawn mowers safer.

Section 7(a)(1) of the CPSA states that a standard should be expressed in terms of performance requirements "whenever feasible."

Thus in order to determine if the Commission's requirements comply with this statutory directive, one must determine whether the standard's requirements are expressed as performance requirements and, if not, whether expressing them as performance requirements is feasible.

Except in extreme cases, whether a given provision is a performance requirement or a design requirement depends on a subjective judgment of semantics. In relation to a stop-time requirement, a "pure" design requirement would, for example, specify that a brake-clutch of a particular design must be used, that it would have certain specified dimensions, materials, spring pressures, and coefficients of friction and would contain numerous other specifications so that there would be no discretion in the design of the brake-clutch. On the other hand, a "pure" performance standard would only specify that the mower must be constructed so that no one could be hurt by it. In these extreme examples, the design requirement does not allow any flexibility and the performance requirement does not provide any

guidance toward what would be acceptable.

The Commission does not agree that the blade stop time requirement of the standard is a design as opposed to a performance requirement. Although the standard requires mower blades to stop within a specified period of time, no specific means of meeting the stop time is required. Manufacturers are not restricted to any particular design to meet the stop time requirement.

Two currently known methods for meeting the stop time requirements are by using a blade disengagement system such as a brake-clutch mechanism or by stopping the engine. However, there are many different designs of brake-clutches. In addition, manufacturers may use their innovative ability and technology to design other systems that would comply with the blade stop time requirements. Thus, the blade stop time requirement is a "performance" requirement. (However, for the reasons discussed below, the final standard does prohibit a design that stops the blade by stopping the engine if there is only a manual restart.)

The reasons given in the legislative history for preferring performance requirements are that product innovation should not be stifled by government action and the belief that performance requirements can be expected to foster rather than stifle competition. (S. Rep. 92-835, p. 30; H.R. Rep. 92-1153, 189; 92nd Cong., 2d Sess., (1972).) The legislative history provides no discussion of the meaning of "feasible," as it is used in expressing the preference for performance requirements whenever feasible. The ordinary dictionary definitions of the term feasible include: Capable of being done or dealt with successfully; suitable; reasonable; likely; and practicable.

Although it would be a factor in the determination of what performance standards are "feasible," the fact that it may be technologically possible to develop a performance standard does not mean that the standard is feasible. In determining whether a standard is feasible, the Commission may consider factors such as whether it is a reasonable use of Commission resources to develop and propose a performance standard for the particular risk of injury, the availability and effectiveness of less performance-oriented standards, and whether it is practicable for manufacturers to produce products that comply with the performance standard. The Commission can also consider the amount of time and resources needed both for the development of a proposed performance standard and for issuance of the final standard.

The commentors have suggested a number of alternative types of requirements that they believe are more performance-oriented than the blade stop time requirement of the final standard. The feasibility of each of these suggestions is discussed below in the portion of the preamble that relates to the particular suggestion. However, the Commission notes that none of the suggestions, if adopted, would involve pure performance requirements. (A possible exception could be the suggestion that a test for a harmless blade be developed. Even this test is design restrictive, however.)

The lawn mower industry has recently suggested the initiation of an effort to develop what they refer to as "performance requirements" that they believe would be less restrictive than the performance requirements that are being issued by the Commission. They wish to develop hand and foot probes to measure whether the blade is accessible for contact with the operator and, if so, whether the blade is capable of causing an injury. The feasibility of this proposal is discussed below under *"Industry trade association probes."* The Commission notes, however, that even these suggestions are not pure performance requirements. In order to pass the accessibility tests that the commentors suggest could be developed, the mowers would have to be designed so that the probes would not contact the blade during the test procedures. It would still be possible to argue, however, that there could be other ways to determine if the mower was sufficiently safe. In addition, consumers who came into contact with the blade in ways that were not envisioned by the test procedures would still be injured.

It is the Commission's judgment that, at this time, no method other than blade stop time requirements exists which would adequately reduce or eliminate the unreasonable risk of hand injury associated with operator contact with the rotating mower blade. The Commission must address the hazards that now exist with lawn mowers as they are currently manufactured. While some manufacturers argue that their innovative ability would be stifled if the Commission mandates a blade stop time requirement, it must be recognized that the basic design of lawn mowers has remained essentially the same over the past two decades. Beginning in 1960, a voluntary industry standard went into effect. This standard was last revised in 1972, with supplements in 1974 and 1977. Although the vast majority of all mowers are said to comply with the standard, the number and types of lawn mower injuries, even considering the increased number of lawn mowers in the marketplace, do not appear to have been significantly affected. Therefore, the Commission believes it must proceed with the blade stop requirements it proposed.

It should be noted that the Commission recognizes that innovative means to cut grass may not present the same risk of injury as rigid or semi-rigid blades. As discussed above, the Commission has excluded monofilament line mowers and any other blades that are not rigid or semi-rigid from the scope of the standard.

d. *Blade harmless or blade inaccessible.* In the May, 1977 proposal, the Commission stated it would be desirable to have a test that would identify a blade that is reasonably safe if an operator inadvertently touches it. The Commission specifically sought public comments suggesting a suitable test to determine blade harmlessness. The Commission believed that inclusion of such a test would encourage industry to develop safer blades which might be the most effective means of reducing injuries caused by contact with the blade. The Commission, however, was unable to find a repeatable test that could sufficiently indicate when an individual is likely to be injured by a moving blade.

Several commentors suggested various test methods to measure blade "harmlessness" or blade "inaccessibility." Other commentors suggested various mower or blade designs in which the blade was said to be inaccessible or harmless. The Commission's evaluation of these various designs and test methods is discussed below:

1. *CU "blade harmless" test.* Consumers Union's recommended standard for power lawn mowers included a "blade harmless" test that would apply both to mowers without a blade control system and to mowers with a blade control system that would stop the blade or render it harmless after three seconds. In the CU test, a vinyl-wrapped dowel was inserted into the path of the blade, either while it was revolving at maximum operating speed or three seconds after release of the blade control. If the tape was not cut, CU considered the risk of injury acceptable. The Commission did not include CU's "blade harmless" test in its proposed standard because the test did not appear to be repeatable and because the Commission had no information indicating whether a vinyl wrapped dowel rod was a reasonable surrogate for a human hand.

2. *Remote controls, etc.* The industry trade association OPEI, contends that there is no need for either a blade stop requirement or hand probes if the mower has no discharge chute and if the controls for starting and for wheel height adjustment are located away from the housing. They believe there will be no occasion for injuries if oper-

ators do not need to approach the blade to perform these tasks. However, the data available to the Commission indicate that only 47% of the blade contact hand injuries occur during acts related to clearing the discharge chute, adjusting the mower height, or starting the mower. The remaining injuries result from such things as accidental contact, removing debris, and cleaning the mower or adjusting the carburetor of the mower (NEISS Power Mower Baseline Study, July-September, 1977). Therefore, the elimination of the discharge chute and the relocation of the other controls, alone, would not provide adequate protection against hand contact with the blade, and the Commission does not adopt this view.

3. *Other alternative test methods.* Two commentors presented comments on alternative test methods for inaccessibility and/or blade harmlessness. One of them identified the complex array of hazard data analysis, human factors analysis, and engineering investigation that would be needed to support such test methods but did not provide the Commission with a supportable test method.

Another commentor suggested an alternative test to the CU blade harmless test and a different foot probe test. His alternative to the CU test was to replace the vinyl tape on the CU probe with surgical tubing. The tubing, the commentor suggests, would be thicker and more resistant to impact and more closely related to human skin. He also mentioned using chicken legs. The foot probe test submitted by this commentor involves thrusting a natural leather shoe for an adult male, fitted with a snug hardwood shoe tree, into the path of the rotating blade. The test would be run at various engine or motor speeds from 1000 revolutions per minute to the maximum operating speed of the mower. Failure would be measured by "any significant cut or tear that shows conclusive evidence that a serious laceration or amputation would have been sustained by the human foot." A scuff or minor opening in the surface of the shoe leather would not be a significant cut or tear. These suggestions were not supported by any data showing that surgical tubing, chicken legs, or shoe leather would sufficiently indicate the potental for injuries to a mower operator. In addition, there was no showing of what size or shape of shoe should be used or why a shoe would provide more realistic protection than the foot probe. Accordingly, these suggestions are not suitable for inclusion in a final standard.

4. *Mower designs presented as means to reduce injury.* On May 4, 1977, the Commission held a "Lawn Mower Inventor's Day." At that time, four mower designs which the inventors felt incorporated an inaccessible blade or a "harmless" blade were presented. Two of these inventors participated in the June 13, 1977, oral presentation on the proposed standard, and one of them submitted extensive written comment.

In addition to these individuals, at the oral presentation one person discussed the safety merits of a lawn mower blade being developed by his company. Other persons extensively discussed the merits of including blade inaccessibility and blade harmless provisions and test procedures in the standard in addition to the provision for a blade control system.

These approaches, which would involve the development of foot and hand probes, were not supported by further data. One commentor did state that a mower blade he presented on Inventor's Day and at the oral presentation had not seriously injured his hand at engine speeds of 1000 rpm. However, a major retail chain store commented that it had tested this blade in its laboratory in October 1975 and had concluded that the blade still impacts with sufficient force to damage a person's foot. They also stated that if a hand were contacted by the blade, a finger would probably not be severed but severe injury would result. The laboratory report also indicated the blade did not cut grass properly.

The oral commentor who presented an allegedly less harmful lawn mower blade made similar claims about the ability of his approach to reduce severity of foot injuries (with shoes) from lacerations and amputations to "bruised up pretty bad."

The Commission's staff concluded that these suggested methods for determining the injury potential to the hand or foot from a rotating mower blade were not suitable for use in a mandatory standard due to lack of criteria which could define a requirement to determine if the blade was inaccessible or harmless and the unfeasibility of developing such criteria within a reasonable time. The Commission agrees with this conclusion.

5. *Industry trade association probes.* The industry trade association, OPEI, met with the Commission in March of 1978. At that time, they offered for the consideration of the Commission's staff a draft of alternative requirements for determining the accessibility of the mower blade to the hand or foot. This draft used the UK foot probe for determining foot accessibility under various test conditions. It recommended the use of a finger probe developed by UL as an electrical hazard accessibility probe for probing the discharge chute. Two "cupped hand" silhouette type probes were offered for probing the lower edge of the mower housing. The trade association has stated that these recommended alternative provisions were a first draft which they believed points in the right direction and is a step forward in the development of performance language for a final standard. They did not claim that the submitted provisions were developed and supported sufficiently for their inclusion in a final mandatory standard.

The Commission's staff evaluated these probes, and the Commission has concluded that these probes are not a satisfactory alternative to the blade stop time requirements of the proposed standard (CPSC staff memorandum, October 19, 1978). One deficiency in the suggested "cupped hand" probes is that there has been no data presented to show that the shape of the probes adequately defines the area of potential blade contact that would result from actions which the operator might attempt about the mower. Also, the suggested test procedure for these cupped hand probes provided for the probes to be slid toward the mower in a vertical position. If the mower housing were low enough that the probe would not go under the mower, the mower would pass the test. However, the cupped shape of the probe does not allow for the fact that an actual human hand could easily reach under the housing's edge by opening the hand to a less cupped position.

As far as the finger probe is concerned, the insertion depth of the probe is limited by a collar, and the trade association alleges this would protect against an adequate number of the injuries that have occurred in the past. Current mowers could be made to pass the suggested test by extending the length of the discharge chute past the probe's insertion depth. However, a user who wished to clear the discharge chute could reach in until the area of the clog is reached and would not be limited to the probe insertion depth unless it was not possible to reach in further.

In general, before hand probes to measure accessibility to the blade could be determined to provide an adequate degree of protection to the consumer, questions must be answered such as (1) what types of hand movements will the users attempt that could result in blade contact and (2) what probe dimensions and degree of manipulation would be needed to protect hands performing these movements. It may not be possible to answer these questions with a reasonable expenditure of money and time, if at all, and the Commission concludes that hand probes to measure blade accessibility are not feasible.

The trade association, after submitting the originally suggested probes,

suggested that the probes should be covered with a layer of a relatively soft material that, if cut or penetrated by the operating mower blade, would indicate a sufficient potential for injury by blade contact. The basic problem with this suggestion is that the Commission knows of no data that can correlate the type and force of blade impact that would cut open the probe covering with the potential for injury to a human hand. There is no known substitute for an actual hand for the purposes of estimating potential injury form blade contact, and there is no known methodology for obtaining sufficient data for developing such a substitute.

The difficulties involved with such a development effort were made clear to the Commission in its effort to develop devices that could adequately detect when a point or edge was sufficiently sharp to constitute a hazard to young children. Even after years of work, no test or procedure was developed that the Commission could conclude was suitable as a uniformily applicable mandatory standard. An effort to determine when a power mower blade will not harm the operator is potentially even more complex, since the procedure would have to protect against avulsions and fracture, as well as lacerations.

The trade association has stated further that they believe adequate and supportable blade accessibility and blade harmelss test criteria and procedure could be developed within 6 months, and that the Commission should cooperate with industry in developing these tests.

For the reasons given above, the Commission has concluded that mandatory requirements for probes to measure blade accessibility and/or blade harmlessness are not feasible. However, the Commission does believe that requirements other than blade stop time requirements that would adequately protect consumers would be desirable. Therefore, since the industry wished to attempt to develop such requirements, the Commission is willing to permit the staff to monitor the development of the requirements. However, because of the number and nature of the blade contact injuries that are now occurring, the Commission does not believe that it would be appropriate to delay issuing the final standard to see what this effort by the industry may produce. The Commission also wishes to stress that it is not undertaking to develop hand probe requirements itself but that it is allowing the staff to cooperate with the industry effort. However, if suitable probes are developed, the Commission will consider whether they are appropriate for inclusion in the mandatory standard and will consider whether an extension of the effective date of the standard is appropriate.

At the present time, however, the Commission cannot conclude that such probes are feasible requirements. In the first place, it is not clear that criteria for the construction and manipulation of such probes, sufficient to reproduce the range of actions that could be achieved by a mower operator, can be developed with the resources that may be available. Also, the time required for development of such probes, the development of proposed mandatory requirements, the response to comments that are received on the proposal, and the issuance of a final standard would be excessive in view of the number of ongoing injuries caused by contact with the blades of power mowers. For these reasons, and because of the limited resources of the Commission, the Commission concludes that performance requirements of the type suggested by the mower industry trade association are not feasible for proposal as mandatory requirements.

e. *Blade stop*—1. *Three second stop time.* A number of comments concerned the proposed requirement that the blade stop within 3 seconds of release of the blade control. The proposal would have required an interim 5 second stop time 2 years after issuance of the standard and a 3 second stop time 4 years after issuance. The final standard requires a 3 second stop time nearly 3 years after issuance. The purpose of this requirement was to ensure that the blade will stop before the operator's hand can touch it, after leaving the operating position.

Some comments suggested that the 7 second stopping time that is met by most current mowers, if combined with a blade stop control, would adequately protect consumers. These comments reasoned that if the operator knows the blade is going to stop, he or she will wait until the blade has stopped before approaching the area of the blade.

These comments also speculated that the operator would sense the decreasing noise and vibration as the blade comes to a stop and would thereby be warned to keep away until the blade stops. They contend that the stop times should be based on human factors research, taking into account the psychological reaction to the changing environmental conditions associated with the engine stopping.

These comments contend that the studies the Commission considered in setting the blade stop times merely measured how quickly an operator could reach the blade and were conducted under unrealistic conditions. They noted that the studies either did not use actual lawn mowers or that the mowers were not running. Commentors also suggested that in real life situations, operators will take substantially longer than 3 seconds to reach the blade because operators fear the rotating blade and because time will be needed to prepare to perform the task which brings them near the blade.

The studies the Commission considered in establishing the stop time included:

1. A 1975 NBS analysis of films of blade access times taken by the University of Iowa.
2. A series of tests conducted at Eckerd College by a task group of CU's development effort.
3. A limited blade access study conducted by the Office of the Medical Director of the Commission.
4. A time to blade access study conducted by NBS.

The NBS study was conducted using accepted human factors techniques and shows median times of between 2.0 and 2.4 seconds for the mower operator to reach the blade, depending on the location of the discharge chute. The Iowa and CU data are similar, with mean access times of 2.68 and 2.89 seconds respectively.

The conjectures of the comments that human factors considerations or changing noise and vibration characteristics will result in longer access times in real life situations are totally unsupported. In fact, the Commission is aware of one incident in which the victim probably contacted the blade less than 3 seconds after intentionally operating the mower's shut-off control. Even if it were true that consumers will often take somewhat longer to approach the blade than is indicated by the studies, this would not warrant lengthening the 3 second stop time requirement. First, it would be virtually impossible to devise a test that would accurately measure the effect of factors such as fear of the blade on the access times without ensuring that the test participants believe they are being subjected to a risk of injury. The only way to establish such tests would appear to be actually subjecting subjects to a risk, and, of course, this would clearly be unacceptable. No commentors suggested a means of testing to take these psychological factors into account. Second, the commentors did not show how much time they believe an operator would need to reach the blade. The Commission's 3 second requirement is already somewhat longer than the median access times producerd by the studies. In addition, the Commission believes that different individuals would take different periods of time to reach the blade. To establish longer stopping times based on median human factors considerations (if such could be determined) would still leave many individuals at risk.

The Commission believes that the 3 second requirement sets a safety criterion that should protect the vast majority of users from injury resulting from time to blade access. The fact that some individual consumers might take significantly longer than this is not material.

Some commentors suggested that the Commission establish a 7 second stop time and then amend the standard to lower the time if experience shows that to be needed. The Commission believes it cannot adopt a "wait and see" attitude in view of the seriousness, and large numbers, of injuries that are occurring as a result of contact with the rotating blade. Therefore, it has not adopted this suggestion.

A number of comments stated that 3 seconds after the engine is shut off or the blade is disconnected, the blade will be "coasting" and would not produce a severe injury. This statement was also unsubstantiated. While it seems rational to assume that a blade coasting after 3 seconds has less potential for injury than a blade under full power, there is no way to determine at what length of time and under what conditions a blade could be reasonably expected to produce only an "acceptable" injury. As discussed above, the Commission knows of no acceptable substitutes for a human hand that could determine at what velocity and force the risk of injury from the blade would be reasonable. The Commission notes that the usual rotary mower blade is a relatively heavy sharpened piece of metal, and the Commission is unable to conclude that even at slow speeds such a blade would be safe. Accordingly, it has not changed the 3 second stop time requirement.

Another comment stated that the Commission did not take into account the effects of normal product deterioration, which could result in longer stopping times as the mower ages and that a consumer would expect the blade to stop in 3 seconds and could be injured if he or she put a hand under the mower after 3 seconds when the blade had not stopped because of product deterioration. It would appear that this comment would support establishing even shorter stopping times and would apply also to any stopping time requirement. However, the Commission has no reason to believe that stopping times will lengthen appreciably as the product is subjected to reasonably foreseeable wear and tear. In addition, tests conducted by brake-clutch manufacturers indicate that there are devices available that will stop the blade within 3 seconds during the useful life of the mowers being tested.

One commentor states that the test procedure for measuring stopping time does not consider that in an actual mowing situation the resistance of the grass against the blade will cause the blade to stop faster than it will in the test. The Commission believes it cannot include this consideration because mowers are used in varying situations and under varying conditions. For example, the Commission's injury information shows that numerous injuries occur over already cut grass or even over surfaces other than grass, such as concrete. In addition, even if the mower were over grass, the degree of grass resistance could reasonably be expected to vary considerably according to the particular mowing conditions. Therefore, grass resistance would not be an appropriate factor to include in a test for stopping time.

2. *"Engine kill".* The standard requires that the mower blade stop 3 seconds after the operator releases the blade control. the Commission knows of two primary ways manufacturers could meet this requirement: by disconnecting the blade from the power source while the power source continues to run (blade disengagement) or by stopping the engine, thereby stopping the blade (engine kill). If the manufacturer chooses an engine kill method to stop the mower blade, it is possible to restart the mower by at least two methods, by a manual start mechanism or a power start mechanism. Manual starting was defined in the proposal as starting the mower engine with power obtained from the physical efforts of the operator. The proposed standard provided that the engine kill method of stopping the blade could only be used in conjunction with a power restart mechanism or where the mower met an "easy restart" test set forth in the proposal. The Commission included this provision in the proposal because, if a mower had to be manually restarted each time the blade control was released and the engine stopped, and if the mower was difficult to start, mower operators would be likely to disable or override the control (for example, by tying or taping it down) to avoid the inconvenience of manually restarting the mower.

A number of commentors questioned this rationale for requiring an "easy restart" or power restart when a manufacturer chooses to stop the mower blade by an engine kill method. The commentors suggest that the Commission has no authority to include in a standard a requirement, such as easy restart, for the purpose of reducing the motivation for mower users to disable a blade control system. These commentors suggest that a user who defeats a safety device assumes any risk of injury resulting from this action. Thus, consumers who disable a blade control system assume the risk of being injured by the rotating blade of the mowers. These commentors urge the Commission to allow engine kill with manual restart that would not meet the easy restart requirement.

Nearly all of the consumer comments on the proposed standard, and several other commentors (including CU, the offeror), urged the Commission not to issue a standard that would result in mowers that stop when the operator lets go of the mower. Some argued that it would be inconvenient for an operator to have to restart a mower each time the blade control system was released and that due to the inconvenience, consumers would defeat the blade control. This would be especially true if operators would let go of the handle with both hands in order to perform tasks such as mopping their brows, swatting at insects, or removing debris from the path of the mower. If the blade control were defeated, users would then have no protection, and few injuries would be prevented by the requirement for a blade control.

To defeat a blade control system that uses engine kill with manual restart, all a consumer would have to do is loop a piece of wire around the mower handle and blade control lever—and then release the wire when the consumer desired to stop the blade.

The Commission recognized in the proposal that stopping a rotating blade by means of engine kill has the advantage of allowing the operator to hear when the engine (and therefore the blade) has stopped. The Commission, however, also recognized that where the blade stopped by means of engine kill, and a manual start was needed to restart the mower, the operator would be tempted to disable the control lever by taping or wiring it down in the activated position or by more permanently overriding the control system. The Commission believes it likely such permanent or temporary defeat would occur so that operators could avoid the inconvenience of having to restart their lawn mower each time they released the blade control lever to, for example, pick up debris in the mowing area, take a drink of water, empty a grass catcher and the like. The comments on the proposed standard from consumers support the Commission's position. Nearly all of the consumer comments opposed a blade control system that stopped the blade by stopping the engine and that also required a manual means of restarting the mower. Many of these commentors made it clear that they would take any steps necessary to defeat such a system.

The fact that mower operators are likely to defeat a blade control system

that requires manual restart is also supported by the American experience with automobile seatbelt interlocks and warning buzzers. A Department of Transportation (DOT) survey of automobile drivers shows that as many as 48% of those persons surveyed defeated or circumvented the seat belt interlock system and 36% actually defeated the system, for example by cutting the wires. (Safety Belt Interlock System Usage Survey, DOT-HS-801—594 (1975), DOT-HS-801-957 (1976)). Because of consumer complaints about seat belt warning systems, Congress took the nearly unprecedented action of prohibiting DOT from requiring automobile seatbelt interlock systems or buzzer systems that necessitated buckling of a seat belt to stop the buzzer (Pub. L. 93-492, 88 Stat. 1482; 15 U.S.C. 1410b(b)). Thus, it is logical to conclude that consumers would defeat an excessively inconvenient blade control system just as many consumers defeated automobile seat belt interlock and buzzer systems.

An analysis of in-depth investigations also lends some support to the conclusion that consumers will defeat a blade control system that uses engine kill in conjunction with manual start (CPSC memorandum, January 30, 1978). In a review of 160 injury investigations, of the 36 operators who reported why they had not turned off their mower prior to the activity which resulted in injury, 13 gave reasons which would indicate that such users would be tempted to bypass an engine kill blade control with manual restart. These reasons included that the mower was hard to start or that the operator was in a hurry and did not wish to take the time to restart the engine.

Some commentors submitted evidence to suggest that consumers will not try to defeat a blade control system that combines engine kill and manual restart. A major mower manufacturer submitted the results of a survey in which 89% of the persons surveyed indicated they stop the mower engine when emptying the grass catcher. The Commission does not believe that this opinion of the users of mowers is relevant to whether the users would disable a blade control if the mower were to stop every time the user had to remove his or her hands from the mower handle. In this latter case, the mower would stop many more times than would be the case where the user might intentionally turn off the mower in order to empty the grass catcher.

Another survey indicating that consumers would not disable a blade control that used engine kill with only manual restart was conducted with the members of a consumer sounding board. However, a review by the Commission of the methodology of this survey indicated that the results of this survey cannot be considered reliable. For example, not all of the persons surveyed participated in mowing lawns. In addition, the participants received a thorough briefing on the safety issues involved. The typical consumer may not be as aware of the seriousness of the risk of injury the blade control was designed to reduce. Also, since the participants were volunteers, it is reasonable to assume that they are more safety-conscious than the average person.

For these reasons, the Commission believes that the evidence that consumers using manual start mowers would, in many cases, disable a blade control that stopped the blade by engine kill is more credible than the evidence to the contrary.

3. *Easy restart.* A number of commentors argue that the easy restart test the Commission proposed is not technologically feasible or supportable. The Commission agrees that the proposed test is not technologically feasible. Recent tests performed for the Commission by the National Bureau of Standards (NBS) show a poor correlation between the subjective judgment of what constitutes a mower that is easy to restart and the results of tests on the same mowers using the proposed test method. The NBS tests showed that the action needed to start a mower manually is substantially different from the force produced during the proposed easy restart test. Extensive and time-consuming research would be needed to develop an appropriate test method that would overcome this problem. Moreover, even if an acceptable easy restart test should be developed, it is possible it would not be effective, since, as indicated in the comments, it may be that consumers would defeat the blade control because of the inconvenience of repeatedly manually restarting the engine, regardless of the ease of manual restart. Therefore, the Commission has decided not to delay issuance of the standard in order to develop an easy restart method. Accordingly, if manufacturers choose to stop the blade by killing the engine, a power restart must be provided.

A number of commentors allege that engine kill is the safest way to address the hazard of contact with the rotating blade because the operator will notice the changing noise and vibration that indicate the mower blade is stopping. However, Commission injury data show that injuries have occurred even where a mower operator consciously turned off the mower before proceeding to perform a task that resulted in placing a hand in the path of the rotating blade. Thus, the changing sound of the stopping engine and blade cannot be considered a complete protection against the possibility of injury.

These commentors apparently believe that this is an advantage which would not be shared by other blade stopping methods. However, the Commission has witnessed demonstrations of current production mowers which meet the blade stopping requirements without stopping the engine (by using a brake-clutch) and has observed that in these mowers there also is a pronounced and readily distinguishable change in sound and some change in vibration for the mowers between when the blade is engaged and when it is disengaged. Therefore, sound and vibration changes which could warn of a stopping blade are not unique to the engine-kill method of stopping the blade.

In regard to those commentors who argue that the Commission has no authority to consider the situation where a consumer intentionaly defeats a safety device, it is the Commission's view, as discussed above under the obstruction test in § 1205.4, that those commentors misread the Commission's authority under the CPSA. The Commission may issue mandatory standards that address unreasonable risks of injury associated with consumer products. The term "associated" was used in the act in connection with the term "unreasonable risk of injury" to convey the fact that the risk of injury did not have to result from "normal use" of the consumer product but could also result from such things as exposure to or reasonably foreseeable misuse of the consumer product. It is the Commission's view that the defeat of a lawn mower safety mechanism because of the inconvenience of the mechanism or the adverse effect of the mechanism on the product's utility or performance is a reasonably foreseeable use or misuse of the mower. As such, the Commission has the authority under the CPSA to address that use. It has done so in this case by requiring a blade control system that stops the blade within 3 seconds after the blade control lever is released and by prohibiting engine kill as a means of stopping the blade if the mower has only manual restart.

One commentor suggests that engine-kill not be allowed because stopping the engine might increase gasoline consumption. While the Commission has concluded that engine-kill with manual restart will not be permitted, gasoline consumption was not a factor in that conclusion. This is because, if all walk-behind mowers were replaced with engine-kill mowers, the estimated increase in the total fuel consumption for all vehicles would be miniscule (CPSC Memorandum, June 30, 1978).

4. *Engine kill with interlocks to prevent defeat of the blade control system.* Several commentors have suggested that a blade control system that relies on engine kill with a manual restart could be designed to discourage consumers from permanently or temporarily defeating the blade control system.

A manufacturer suggests a wiring method that would discourage consumers from permanently defeating the system. The Commission has decided not to accept this suggestion at this time since it is questionable whether the suggested design would effectively minimize the chance that consumers would defeat the blade control system. As discussed below, it is so simple to temporarily defeat the blade control that persons inclined to defeat the control would not need to disable it permanently. Accordingly, the Commission believes that a more effective approach would be to reduce the initial motivation for users to disable the blade control system.

The mower manufacturer also suggested a method (interlocks) whereby if the blade control were defeated by, for example, taping or otherwise tying it down in the operating position, and the engine were then shut off by the shut-off control, the engine could only be restarted if the blade control were released. The commentor suggests that such a method would discourage defeat of the blade control system. However, if a mower operator has gone to the trouble of tying down the blade control in the first place, it is not unreasonable to assume that person will simply not stop the mower during the mowing operation in order to avoid any inconvenience resulting from having to untie the blade control to restart the mower. This could increase injuries by causing users to perform tasks around the mower while the blade is operating. Moreover, a temporary defeat of the blade control system could be accomplished by simply looping a piece of wire over the handle and control lever and then unhooking the wire to stop the mower. Since the provision of interlocks would merely interpose an additional and easily accomplished step for a person wishing to disable the blade control, the Commission is not convinced that interlocks would decrease the likelihood of operators permanently or temporarily defeating the blade control.

5. *Power restart.* The proposed standard would allow engine kill as a method of stopping the blade if the mower is equipped with a nonmanual starting mechanism. A nonmanual start mechanism could involve pushing a button or flipping a switch. On the other hand, winding a crank to compress a spring that would provide the starting force would be considered "manual restart" as that term is defined in the proposal and in the final standard, because it involves starting the engine with power obtained from the physical efforts of the operator. Electric mowers already have power restart mechanisms since electric mowers can be started by flipping a switch. To meet this requirement, gasoline mowers could use some type of stored mechanical energy or battery power or any other method that could be developed by manufacturers. The Commission has no data to indicate that suitable power start mechanisms cannot be developed by manufacturers at a reasonable cost.

6. *Blade disengagement mechanism.* Another means of complying with the Commission's blade stop time requirements is through a blade disengagement system. Such a system consists of a blade control that when released disconnects the rotating mower blade and stops it without stopping the engine. One type of blade disengagement system would be a brake-clutch. While manufacturers would be free to develop other methods of blade disengagement, several commentors raised issues concerning brake-clutch mechanisms.

(i) *Reliability and safety.* A number of mower manufacturers contend that brake-clutch systems are not reliable and may fail in a way that the blade continues to rotate when it should be stopped. They state that, after the blade control is released, consumers will assume that the blade has stopped, and, if it has not, consumers will be injured when they place their hands or feet in the path of the blade. For the most part, commentors provided no data to support their view that brake-clutch systems are unreliable or unsafe.

One mower manufacturer, however, did submit some data to support its contention that these systems are unreliable. This manufacturer assumed that the average number of blade brake-clutch actuations would be 600 cycles per year and stated that a reliable clutch mechanism should be able to withstand 250 hours of field testing and a lab test life of 20,000 cycles without failure. This manufacturer contends that brake-clutches are unacceptable because of their poor reliability and that the level of reliability required is beyond current industry technology.

To support its contention, the manufacturer provided test data on 19 mower units with 5 different clutch designs. None of the units completed 250 hours without failure and none achieved a cycle life of 20,000 cycles. Tests were terminated for the following reasons:

1. Unit was hard to start
2. Clutch slippage excessive
3. Failure of brake to release
4. Severe knocking noise in clutch
5. Brake failure
6. Sticking clutch
7. Failure of brake to override full throttle
8. Clutch control failure
9. Clutch bearing failure
10. Clutch wear excessive

However, another commentor specifically analyzed the results of the tests conducted by the commentor mentioned above in relation to the clutch of one manufacturer. The latter commentor stated that the engine of the mower with which the clutch was tested runs at a lower speed than the engine for which the clutch was designed, which is the engine used by most lawn mower manufacturers. Since this critical variable was apparently ignored by the commentor submitting the test results, the Commission is unable to rely on these tests in determining the question of brake-clutch reliability.

Other commentors have expressed their confidence in blade brake-clutch reliability. One clutch manufacturer has presented extensive and detailed evidence of the durability of brake clutches. In actual mowing tests, three units have each completed over 250 hours of field testing without failure. In ongoing field tests, two units have compiled a total of 256 mowing hours and 5,016 cycles with no failures to date. In addition to this, the clutch manufacturer, in conjunction with an engine manufacturer, has conducted overload tests and concluded that this clutch does not increase the wear on the engine or crankshaft. In laboratory cycle testing, a cycle life of over 30,000 cycles has been demonstrated, and in laboratory wear tests, 250 hours of operation and 15,000 cycles were completed on several units without a failure to stop the blade in less than 3 seconds. There was no appreciable degradation of blade stopping time throughout the laboratory testing. These tests indicate that the brake-clutches tested are reliable and safe. The Commission has studied the data submitted relating to these tests and has concluded that the tests were conducted under generally acceptable test procedures and accepts their validity.

Another clutch design has been subjected to actual field testing by the General Services Administration (GSA). The GSA, under their Experimental Technology Incentives Program, has reported on the field testing of a mower which GSA felt incorporated unique safety and low noise characteristics (Final Report, Etip Project 150, June 26, 1978). One of the safety features of this mower is a blade brake-clutch. Fifty units of these mowers were tested at ten different locations over a period of four months. This was an accelerated test

with usage varying from less than one hour per day to over four hours per day. Fifty percent of the users were subjecting their mowers to over four hours per day mowing time. There were no reports of a clutch failure. Although the amount of field test time was not recorded for each unit, a conservative estimate would place the test time range from something less than 80 hours to a maximum of 320 hours, with 50% of the units at the high end of the range.

The Commission also notes that at least 2 mower manufacturers are currently manufacturing mowers that include a brake-clutch mechanism.

Because some of the Commission's data became available after the close of the formal comment period, the Commission on November 2, 1978, published a summary of the data on brake-clutch safety and reliability and asked interested persons to examine the data and make additional comments to the Commission if they wished (43 FR 51038). The time for submitting written comments in response to this request was extended to December 15, 1978, and a presentation of oral comments was held on December 11, 1978.

In addition to comment on the data that the Commission had received, the Commission requested comment on four questions that had been raised by the comments on the proposal that concerned brake-clutch safety and reliability. These questions are discussed separately below:

1. *What is the likelihood of a blade brake-clutch system failing in such a way that, rather than stopping, the mower blade continues to rotate?* In dealing with this question, and with the other aspects of brake-clutch safety and reliability, it must be kept in mind that a brake-clutch is a relatively simple device. Due to the large production of brakes and clutches for automobiles and other machines, and because of the extensive use of brake-clutches on other types of machinery, the technology associated with brake-clutch devices is highly developed. As can be seen from the comments, the types of potential problems with any particular application of brake-clutches can be identified, and the technical parameters for solving these problems are also known.

A brake-clutch could be used on a walk-behind power lawn mower to stop the blade without stopping the engine as one means to comply with the standard. The brake-clutch assembly would typically be mounted between the drive shaft of the engine and the blade of the mower. A control assembly would allow the operator to control the brake-clutch while in the mowing position. While there are various types of clutches and brake-clutch designs, the basic principles can be illustrated through a discussion of a centrifugal brake-clutch. This is the type of clutch referred to by some of the commentors.

When the engine of the mower is started, the clutch is in the disengaged position and the brake is engaged. Thus, rotation of the blade is prevented by both the clutch and the brake. When the operator assumes the mowing position and grasps the blade control device, the control releases the brake and engages the clutch, thereby allowing blade rotation to commence. Speed of blade rotation would then depend on the engine throttle setting as it does with today's mowers. When the operator releases the blade control device, the brake is engaged and stops the blade. But, because the clutch has disengaged the blade from the engine, the engine continues to run. The process would begin again when the operator regrasped the blade control device. To improve safety, in one design, the brake is spring loaded, and unless the spring force is overcome by grasping the blade control device, the brake springs cause the brake to engage and the clutch to disengage. Thus, if the actuating linkage broke, the blade of the mower would be stopped.

The parties commenting on this issue agreed that the means for insuring that the blade stops must be resolved for each different model of mower equipped with a brake-clutch. The answer requires engineering analysis and testing of the total system (the engine and its controls, the brake-clutch and its controls, and the blade, including any linkages and fasteners used to interconnect or control the main components).

Some of these commentors suggested that the concept of "failing in an unsafe manner" should include failures where the blades did not continue to rotate and include mower operational characteristics such as hard starting, time between clutch engagement and achieving blade cutting speed, disengagement or slipping of the clutch while mowing, force needed to activate and hold the blade control, the frequency and cost of necessary maintenance or repair, and the knowledge needed to repair or maintain the brake-clutch. These commentors argued that presence of "safe failures" and/or undesirable operating characteristics would cause consumers to bypass the blade control and would therefore be hazardous. The Commission does not agree that the occurrence of "safe failures" or the presence of undesirable operating characteristics are at issue when one is evaluating the likelihood of an unsafe failure. They are related rather to issues which are discussed elsewhere concerning the potential effectiveness of the standard, consumer acceptance of the brake-clutch, and the overall reliability of the brake-clutch. Therefore, this discussion will focus on the likelihood of an unsafe failure.

One brake-clutch manufacturer categorically states that the design of its unit is such that the blade will always stop. It states that individual units have been tested up to 44,254 cycles and 737 hours without failure. It further reports that testing programs have worn out engines, blades, and other components while the clutch continued to function properly. Another brake-clutch and lawn mower manufacturer states its brake-clutch is designed so that if the clutch fails, the brake stops the blade. It also points out that a feature which costs less than one dollar could be added to stop the engine in case of a brake-clutch failure. This manufacturer reports on successful brake-clutch laboratory tests with engines from two different manufacturers.

Field tests conducted in 1977 by a Federal agency (GSA), which were previously reported, were continued in 1978. The mower manufacturer reports that these brake-clutch equipped mowers continue to perform well and several thousand hours of use have accumulated with complete reliability and safety. This report is basically confirmed by a comment from the Federal agency indicating that after extensive use of these 50 mowers under the varied conditions of the field test (10 sites, light and heavy duty use), "there were no complaints about the reliability and safety" of the brake-clutch. Another manufacturer who currently produces brake-clutch-equipped mowers states that the fact that these mowers are offered for sale demonstrates their belief in their product's reliability.

A university professor and professional engineer who has taught machine design for 18 years, has been active in lawn mower safety design for ten years, and has experience testing brake-clutches on both riding and walk-behind mowers states that it is highly unlikely that a well-designed brake-clutch system will fail unsafely.

A group of commentors generally believe that eventually some brake-clutch mowers will experience failures in a way that will permit the blade to continue rotating. These same commentors also state that there are ways to design a system which will not fail in a hazardous manner but at the expense of added complexity, cost, and weight and with the addition of a feature to kill the engine should the brake-clutch fail. They express concern over internal failures of the brake-clutch mechanism, misadjustment, control cable or linkage failures, and the effect of the environment and

wear and tear on the mechanism. They predict these factors will lead to unsafe failures. Some of these commentors also provide speculative examples of potential component failures which might, in an unspecified brake-clutch system, lead to unsafe failure.

All parties agree that the likelihood of an unsafe brake-clutch failure is a direct result of the design, production, and assembly of the entire system. The brake-clutch and its components and control system must be compatible with the engine subsystem and blade.

A number of commentors state that, at least at present, such an overall system cannot be designed so that unsafe failures will either not occur or occur only rarely. These commentors, however, present little or no data to support this conclusion. Some of these concerns are due to control cable or linkage failure caused by use and exposure. However, since control cables and linkages have been used for various purposes on lawn mowers and other devices for many years, the Commission believes that manufacturers should be able to avoid this source of failure.

The Commission also notes and agrees with the comment that any failures of brake-clutch systems on specific mowers will not automatically result in an injury. Rather, even if a small number of mowers fail unsafely, the overall risk of injury will be that of the prestandard mower plus a factor for operator dependence on the brake-clutch for the failed mowers. The rest of the mowers conforming to the standard will have a low risk of injury.

Other comments and supporting data indicate that two fail-safe brake-clutch designs exist, and the manufacturers of these designs have not reported any unsafe failure during field and laboratory testing. In addition, two mowers equipped with brake-clutches are now being offered for sale, and a third manufacturer has one available.

Finally, a professional engineer believes safe and reliable brake-clutch equipped mowers can be produced. For example, a failure of the clutch to disengage when the blade control is released will not be hazardous if the brake is large enough to stall the engine in this event. Failure of the brake spring can be prevented by minimum size and quality specifications for the springs or by providing more than one spring. Engagement and longevity characteristics of the clutch and brake can be controlled by the proper selection of materials and sizing of the components.

After considering the brake-clutches that are actually in production, the fact that brake-clutch technology is highly developed, the laboratory and field test showing that brake-clutches are reliable, and the fail-safe features that can be incorporated in the design, the Commission concludes that technology is available to design, produce, and assemble blade brake-clutch equipped lawn mowers which have a minimum likelihood of failing in an unsafe manner. While there may always be some likelihood of specific failures, the use of failsafe design principles and responsible quality control should reduce this likelihood to a minimum.

2. *Can brake-clutch systems be designed so that if they fail, they will fail in such a way that the blade does not turn?* This issue is the opposite of the likelihood of a blade brake-clutch failing in an unsafe manner which is discussed above. Some commentors state either that there are existing designs which only fail in such a way that the blade does not turn or that it is technically feasible to design and produce such systems. Other commentors express reservations that this is technically feasible. These comments were discussed under the issue of the likelihood of an unsafe blade brake-clutch failure. The Commission's conclusion is the same. After careful consideration of the conflicting comment and data, the Commission concludes that technology is available to design, produce and assemble blade brake-clutch equipped rotary lawn mowers which have a minimum likelihood of failing in an unsafe manner.

3. *What is the potential for designing a brake-clutch system that is reliable during the operating life of the mower?* A number of interested parties provided comment on this issue in response to the November 2, 1978 and November 29, 1978 FEDERAL REGISTER notices. The commentors included the lawn mower industry trade association, individual lawn mower manufacturers, brake-clutch manufacturers, lawn mower engine manfacturers, a consumer testing organization, private testing laboratories, university professors, a government agency, and private inventors. Information was also received from a large retail sales organization, a lawn mower rental organization, and other interested parties.

In responding to this issue, the industry trade association and a number of mower manufacturers indicated that analyzing the feasibility of designing reliable brake-clutch systems required defining the term "reliability" as it applies to the mower.

Neither the original commentors on the proposal nor the commentors responding to the November 2, 1978 and November 29, 1978, notices offered the Commission an adequate technical basis for defining reliability as it applies to a brake-clutch for a rotary lawn mower. However, they have offered some parameters to frame a general definition of this term. Essentially, these parameters are summarized by the industry trade association, which states that a reliable brake-clutch would have to perform at an acceptably high statistical level of reliability:

(1) The tasks for which it was intended,

(2) In the manner intended,

(3) Under the actual conditions of expected use, storage, and maintenance,

(4) For the expected life of the lawn mower.

A technical dictionary largely concurs, by defining reliability, in the engineering sense, as "the probability that a component part, equipment, or system will satisfactorily perform its intended function under given circumstances, such as environmental conditions, limitations as to operating time, and frequency and thoroughness of maintenance for a specified period of time." This definition reflects the meaning of the term reliability as used by the Commission's staff.

As these two definitions demonstrate, the term "reliability" is a reasonably well understood technical term which can be used without specifying precise levels of reliability as one could in a procurement specification or in establishing a quality control program.

One commentor states that evaluating the potential for designing a reliable brake-clutch requires defining operating life and establishing acceptable levels of reliability as they relate to operating life. He also states that this must be done with an understanding that not all mowers are, or should be, designed with the same operating life objective. Other commentors state that their company has requirements of performance and reliability, but that they nevertheless believe the Commission should reveal its expectations as to the level of reliability the Commission expects manufacturers to meet. As one commentor asks, will it be a 250 hour life cycle with periodic maintenance allowed, or a 400 hour cycle with no maintenance, or 100 percent reliability for as long as the product is used?

The Commission's technical staff has not performed nor sponsored development of test methods and procedures for laboratory or field tests designed to establish statistically valid predictions of the life of a lawn mower or of a brake-clutch equipped lawn mower. The standard does not state an operating life objective for lawn mowers nor does it state a reliability value which manufacturers must meet. Rather, the standard states the

performance the mower must achieve to comply with the standard.

As stated above, manufacturers design their mowers with different operating life objectives. A brake-clutch used on a mower would therefore be expected to provide reliable service for the operating life selected by the manufacturer. Achieving this objective is ultimately the responsibility of the manufacturer. It would not advance the safety objectives of the standard for the Commission to establish an operating life objective of the mower and therefore of the brake-clutch used on the mower. Rather, the Commission concludes from the available data and from an awareness of the state-of-the-art that it is technically feasible to design, develop, and produce a brake-clutch or other means which, when properly installed and maintained, will stop the blade in the manner required by the standard for a reasonable period of time. What is a reasonable period of time in any given case depends on the expected operating life of the other components of the mower, which is ultimately controlled by the mower manufacturer.

Three lawn mower manufacturers report that they currently manufacture mowers equipped with a brake-clutch that will comply with the final standard and which they believe is reliable. Two of these three lawn mower manufacturers state that they are willing to provide their brake-clutches to other manufacturers. One of these manufacturers has provided some data supporting the reliability of mowers equipped with their brake-clutch, including field testing data showing some mowers reliably functioning after over 370 hours of field use. At least one other lawn mower manufacturer agrees that it would be possible to develop brake-clutches for mowers.

Two brake-clutch manufacturers also claim that reliable brake-clutches are technically feasible. One believes that the laboratory and field data previously shared with the Commission and augmented by additional data submitted with these current comments confirms that their brake-clutch is reliable for the life of the mower. The other brake-clutch manufacturer believes they have "solved all the problems likely to be encountered in mower operation." Indeed, they state that their testing is hampered by engine failure occurring before brake-clutch failure. Both these manufacturers state they are capable of meeting the brake-clutch needs of the mower industry. However, one of these is planning some additional field tests to complete their effort.

Several other mower manufacturers, engine manufacturers, and an inventor questioned the feasibility of designing a reliable brake-clutch. These reservations were largely expressed in terms of cost and in terms of the difficulty of defining the life of the mower (including all environmental factors and human factors) and the difficulty of defining reliability for a specific lawn mower, for a model produced in quantity, and for all lawn mowers. Some speculated on possible ways mowers with brake-clutches might fail (safely or hazardously) because of design problems, production problems, assemblage problems, post-sale maintenance or lack thereof, consumer use and abuse, and the effects of time, weather, storage, moisture, and fertilizer on the mower. Others discussed the data provided the Commission by brake-clutch manufacturers and some of the results of their own experience in testing. The consensus of this group is, essentially, that the technical feasibility of designing a reliable brake-clutch has not been statistically proven based on laboratory testing, field testing, and consumer or user testing of a very large number of mowers over a long period of time. In one case, the inference was that data would be needed on as many as 100,000 mowers over at least several years of customer use. In considering these comments, the Commission notes that very little concrete data was supplied supporting these views. To explain this lack of data, commentors indicated that:

a. Providing data on in-house testing of concepts might compromise valuable proprietary information.

b. They have not yet designed or evaluated a system they believe to be reliable.

c. They have no data on brake-clutch systems designed by others since they view that as the responsibility of the marketer of the brake-clutch. A consumer testing organization, based on a review of the available record and their own knowledge, concluded that it is possible to design and produce lawn mower brake-clutch mechanisms with a high degree of reliability. A private testing laboratory, university professors, and a government agency further supported the feasibility of brake-clutch devices.

A large retail sales organization, a rental firm, and other interested parties question whether the available data support a conclusion that reliable brake-clutches are feasible. These comments are either unsupported by data or speculative.

The Commission itself has not designed or performed reliability testing on brake-clutch equipped mowers. However, the Commission has considered all the data and opinions generated during the standard's development period, including all materials offered in response to the November 2 and 29, 1978, FEDERAL REGISTER notices. The Commission also considered the state-of-the-art of brake-clutch usage in chainsaws, existing walk-behind rotary mowers, vehicles, and industrial applications. In addition, the Commission considered the questions concerning brake-clutch reliability raised by some commentors and the confidence expressed by other commentors that designing a reliable brake-clutch for the rotary lawn mower is technically feasible.

For the reasons given in the discussion of question 1, the Commission is persuaded that it is both technically feasible and within the state-of-the-art to design, develop, and produce a brake-clutch equipped rotary mower which, when properly assembled and maintained, will reliably stop the blade as required by the standard for a preselected period of time which the manufacturer can relate to the expected life of the mower.

4. *Would it be desirable to include a requirement in any final lawn mower standard issued by the Commission requiring that if a brake-clutch system fails in such a way that the blades continue to turn, there must be an audible or visual warning signal that the blade is still turning?* The Commission received numerous comments regarding the desirability of an audible and/or visible warning to indicate failure if a brake-clutch should fail in an unsafe mode. Some commentors found this to be a desirable feature, and others felt it to be unnecessary. Some commentors felt that resources for developing such a device would be better used to improve on present brake-clutch development. Others suggested that a more satisfactory approach would be to use an allegedly inexpensive device which would sense when an unsafe failure occurred and then stop the mower engine. Some said that an audible or visible warning would be very expensive to adopt, and others stated that it involved nominal expense.

Since the Commission believes that a reliable brake-clutch is technologically feasible and can be designed to last for the expected life of the mower, and that injuries resulting from unsafe failure would be infrequent, it would not appear necessary to require that manufacturers of reliable devices incorporate a device to warn the users in the event of unsafe failures. Also, commentors noted that other equally effective protection methods, such as engine-kill in the event of clutch-brake failure, could be incorporated at nominal expense. A requirement for warning devices, when other equally promising designs are available, does not seem to be appropriate. The Commission also agrees with those commentors who say that delaying the issuance of the major requirements of this standard for the period necessary to develop appropri-

ate requirements offering protection from such an unexpected occurrence would not be in the interest of consumers. The Commission notes that other commentors stated that the changes in air flow, noise, and vibration that occur when the blade stops provide an indication from which the user could determine if the brake-clutch device has failed.

In not requiring these warning devices, however, the Commission does not mean to imply agreement with the comments which allege that such a warning system could lead to injury if the unusal actuation of such a device created curiosity and thus invited access to the blade.

In addition to the specific questions on which comment was solicited by the Commission, comments were submitted on a number of other issues.

Commentors have raised a number of questions about the relationship between the use of a blade brake-clutch and the speed or revolutions per minute (rpm) of the rotary lawn mower engine. Gasoline engines designed for use on rotary mowers may be roughly divided into two categories based on the speed at which they operate. The high speed engines generally operate at 3000 to 3500 rpm. The low speed engines generally operate at about 2400 to 2600 rpm. The concerns of these commentors are discussed below.

1. A retail sales organization, the industry trade association, and two lawn mower manufacturers state that brake-clutches have not yet been developed to operate reliably on low speed (2600 rpm) engines. They state that low speed engines are now used to reduce noise levels and to reduce the potential for thrown object injuries. They also state that future noise regulations by the Environmental Protection Agency and power mower regulations the Commission may issue to address hazards from thrown objects may require the use of low speed engines to comply with these potential regulations. These commentors argue that the brake-clutch requires use of a high speed engine, thereby preventing them from using a low speed engine to comply with potential regulations on noise levels and thrown objects.

This concern that brake-clutches have not yet been developed to operate on low speed engines is based on tests conducted by two mower manufacturers on one centrifugal type clutch design. These tests indicated unsatisfactory operation at the lower rpm (2600). One manufacturer presented a film of tests at the December 12, 1978, oral presentations. The other manufacturer presented test results as part of the comments on the proposal. This manufacturer restated the conclusions from the previously submitted comment at the December, 1978, oral presentation.

These concerns would only be valid if (1) centrifugal clutches were the only feasible way to meet the blade stop requirements of the standard and if (2) centrifugal clutches could not be designed to operate at low speeds.

In the first place, the centrifugal clutch is not the only type of brake-clutch that can be used to comply with the standard. There are brake-clutches which are not of the centrifugal type, such as the ramp cam clutch currently being developed for use on the rotary lawn mower. Also, one manufacturer of both brake-clutches and lawn mowers states that its centrifugal brake-clutch (1) is readily adaptable to any lawn mower design being manufactured today, (2) can handle virtually any torque and horsepower combination, and (3) can be adapted to engage at speeds as low as 300 rpm. This manufacturer states that, for this clutch, engagement speeds are scientifically determined by formulation of clutch rotors, variations in rotor geometry and the total amount of weight used.

The manufacturer of the clutches which were tested by the two mower manufacturers that furnished data to support their concern about centrifugal clutch operation on low speed engines agrees that his *standard* clutch would not give satisfactory performance on those low speed engines. However, this clutch manufacturer states that "we are confident that by working together with these lawn mower manufacturers, we can, without any great difficulty, alter our standard clutch to provide satisfactory performance on low speed engines."

The Commission notes that the two centrifugal clutch manufacturers mentioned above have furnished the vast majority of the laboratory and field test data which has been presented to the Commission during the development of the standard.

Therefore, after considering all these issues, the Commission is persuaded that, while some technical efforts may be necessary to adapt the centrifugal clutch to a low speed engine, a centrifugal clutch for such engines is technologically feasible. Moreover, it appears that other types of clutches have been used successfully with low speed engines.

2. An engine manufacturer stated at the oral presentation that the idle speed of the mower increases between 600 and 800 rpm as the internal friction of the engine decreases due to wear. The Commission surmises that the commentor's concern is that the claimed increase in idle speed due to wear will cause unplanned engagement of a centrifugal clutch.

As stated previously, centrifugal clutches are not the only way to comply with the standard. Centrifugal clutch manufacturers have stated that their clutches can be adapted to any lawn mower design being manufactured today. The data provided to date by these brake-clutch manufacturers has not revealed large changes (600–800 rpm) in engine idle speed.

Further, one of the centrifugal brake-clutch equipped rotary power lawn mowers currently being manufactured and offered for sale is equipped with a governor to regulate the speed of the engine at both idle and normal operating speeds. Therefore, it would appear that if an engine were to have large increases or decreases in idle speed as the engine breaks in and wears out, technology is available to overcome this alleged difficulty.

OPEI contends warranty costs or costs to the consumer might rise if mowers with brake-clutches had to be brought back for adjustments. One manufacturer (Honda) expressed the opinion that their brake-clutch unit would require little maintenance, and that such maintenance as would be required could be performed by many consumers. The amount of maintenance required for a blade control system may be highly dependent on the particular design of the system. Inferior design might lead to high warranty costs, but manufacturers will balance the costs of better components and quality control against warranty costs. Honda's brake-clutch mower is priced $35 to $40 above its conventional mower, and the Commission can only assume that all expected associated costs are included in this amount. Statements by two brake-clutch producers indicate that the devices would last as long as the mower without any maintenance required.

OPEI further states that industry in general, and small manufacturers in particular, will experience heavy costs in developing and teaching proper servicing procedures to the dealer network. This statement seems to presume that there will be a large number of brake-clutch devices or that there will be many different interactions between blade controls and power designs. The Commission does not expect a large number of brake-clutch designs to be marketed. The basis for this expectation is the small number of engine manufacturers for the walk-behind mower market. The two major engine manufacturers, Briggs and Stratton and Tecumseh, along with Lawn Boy, which manufacturers its own engines, probably produce more than 95 percent of all walk-behind mower gasoline engines. The Commission expects that small mower manufacturers will rely on engine brake-clutch device combinations recom-

mended by their suppliers, and that the suppliers will provide much of the service support in order to sell their brake-clutch devices. One brake-clutch manufacturer has indicated it will provide this kind of support.

OPEI also contends that the Commission's Economic Impact Statement does not take into account price increases caused by certification costs. However, these are not expected to be significant, since the great majority of all mower manufacturers already conform to the voluntary ANSI standard. Since most of the firms have testing, recordkeeping, and labeling activities related to the ANSI standard requirements, the certification rule should have minimal additional impacts on those firms that comply with the ANSI standard. Those firms that do not comply with the ANSI standard may find the rule will have a relatively greater impact, but in absolute terms the impact should be small. The certification rule which is proposed elsewhere in this issue of the FEDERAL REGISTER will leave a great deal of discretion to the individual manufacturer in designing a testing program, which should enable the manufacturer to minimize certification costs.

OPEI also raises the issue of product liability costs, which it finds difficult to quantify but believes will be passed on the consumer. OPEI does not identify the source of the product liability costs. Product liability costs would appear to be a function of the reliability of the device. As discussed above, the Commission has concluded that reliable brake-clutch devices are feasible.

Furthermore, the Commission believes that certification costs and research and development are primarily fixed costs. These costs will be spread over many years of production, and the ability of the individual manufacturer to pass these costs along will be determined by competitive pressures. The costs mentioned by the OPEI were not felt to be large enough to warrant inclusion in the Commission staff's Economic Impact Statement.

Both the trade association and an engine manufacturer commented that January, 1982, is a misleading effective date, since, to fit normal production cycles, the industry would have to comply by October, 1981. The Commission is aware of the normal production cycle and discusses the factors relating to the effective date in Section F of this notice. Although the Commission believes that firms can comply with the standard by October 1, 1981, the additional time may be important to firms that encounter unforeseen difficulties.

OPEI suggests that the effective date should be October, 1983. The Commission believes this suggestion is not warranted. The December 31, 1981 effective date of the standard will allow two full mowing seasons for testing. An October, 1983, effective date would penalize the suppliers and manufacturers who have already made substantial investments toward complying with the standard and would subject consumers to unnecessary injuries.

Many commentors addressed the question of whether a brake-clutch device would perform in the manner which would be expected. For discussion purposes, these comments can be divided into two basic categories, although in reality the two categories are interrelated.

One category involves consumer acceptance. That is, certain characteristics of a brake-clutch system could be such that consumers might be dissatisfied with the product which incorporates that system. Examples of such characteristics that were noted included controls which are difficult to hold for extended periods, slipping of the clutch while starting or mowing, repair which could be required, and required maintenance which the user might be unable to perform.

The second category relates to the potential *effectiveness* of a blade-control system if a brake-clutch is used on the mower to meet the requirements of the standard. These comments generally assert that the standard will not be as effective as anticipated because injuries could occur due to certain potential characteristics of a brake-clutch system. Such possible characteristics noted by the commentors are failure of the brake-clutch device, failure of individual components of the system associated with a brake-clutch, failures resulting from improper maintenance, accidental actuation of a brake-clutch, defects resulting from improper assembly, poor design, manufacturer intent, and defeat of the system by retailers or consumers.

Insofar as the characteristics noted above involve consumer acceptance as separate from safety considerations, the Commission believes that mowers incorporating a brake-clutch can be designed so that they are both reliable and acceptable to the user. Naturally, those mowers which are more convenient to use will have the advantage of greater acceptance and could enjoy a greater share of the mower market than less acceptable mowers.

As explained elsewhere in this notice, the Commission believes that controls can be designed which are not difficult to hold down during normal mowing operations.

While slipping of the clutch while mowing is viewed by some commentors as a disadvantage, this is not necessarily always a disadvantage. A brake-clutch designed to permit slipping under heavy mowing conditions could result in increased utility. Clutches (and thus blades) have been reported to slip when mowing heavy or tall grass. Whereas the engines of presently produced mowers might stall under such conditions, the engine of a mower equipped with a brake-clutch could continue to run even though the blade stopped. The operator of such a mower would need only to raise the mower long enough for the blade to re-engage without having to restart the engine. Even though some comments report this slipping characteristic for some brake-clutch designs, the Commission does not view this as a disadvantage if the point at which slippage occurs serves to protect against stalling that could otherwise occur. It is significant that users of mowers supplied by the General Services Administration (discussed above) did not report dissatisfaction caused by clutch slipping.

Some comments also argued that excessive clutch slippage could result in failure leading to bypass or expensive repair. However, such failure can be avoided by the proper choice of design. Brake-clutch manufacturers have submitted information which they feel demonstrates that both brakes and clutches have lasted beyond the expected life of the mower. The avoidance of undesirable slipping is basically a problem in reliability. As discussed above, the Commission has concluded that reliable brake-clutches are feasible. The Commission notes that disabling the system to avoid clutch slipping would probably require more than simply tying down the blade control, since the clutch would still slip under this condition.

Several commentors claim that some expected repair and required maintenance of brake-clutches and related systems would be outside the capabilities or inclinations of mower users. This appears to be a matter of consumer acceptance not necessarily related to the safety of the mower. One manufacturer of a presently produced mower which incorporates a brake-clutch uses a device for adjusting its mower cable controls similar to those used for periodic adjustment of the caliper brakes of a bicycle. This adjustment does not appear to be excessively burdensome or difficult, and it is assumed that the manufacturer of such a control would supply adequate instructions to the buyer. Another manufacturer of brake-clutches claims that his device does not require adjustment or other maintenance over the life of the mower. Thus, it appears that excessive maintenance need not be a problem with brake-clutches. Regarding repair, the Commission believes, as stated elsewhere in this

notice, that a brake-clutch can be designed which will be reliable for the life of the mower.

Some commentors described failures which have occurred or might occur and which could cause dissatisfaction or require repairs that could not be reasonably expected to be within the capabilities of the average user. Such noted failures involved cables breaking and failure of internal parts of the brake-clutch device. Again, such failures are preventable through proper system design and selection of components.

Regarding brake-clutch and other system failures, the Commission has determined, as discussed elsewhere, that development of a reliable brake clutch and related components is well within the capabilities of manufacturers. As noted by some commentors, no mechanical system can be expected to be completely safe from failure. Still, the likelihood of failure, and of injury when failure occurs, is expected to be small compared to the numbers of injuries which occur from presently produced mowers.

Some commentors warn that users of brake-clutch type mowers could become so accustomed to the blade stopping when the control is released that they will routinely and confidently approach the blade path when the engine is running. The manufacturers' instructions and common sense might warn against such action. However, users are currently being injured in numbers greatly exceeding what might reasonably be expected to result from unexpected brake-clutch failure. While manufacturers of mowers using brake-clutches would very legitimately be concerned about the product liability considerations of a design which fails and leads to injuries, the Commission must ultimately consider the protection of the great majority of those users whose systems do not fail in a manner or situation which results in injury. It is the Commission's considered belief that the potential for reliable brake-clutches is such that the injuries caused by presently produced mowers far outnumber any injuries which might occur from unwarranted reliance on the continued performance of safety systems which are intended to stop the mower blade.

Although the comments raised the possibility, intentional non-compliance by manufacturers or the possibility that retailers might offer system defeat as an unadvertised promotional method are not expected to be significant problems in view of the fact that the sale or offering for sale of such mowers would be a prohibited act under the CPSA.

Users might conceivably bypass a brake-clutch system for any number of reasons. However, the Commission believes this will not be a common occurrence since proper choice of design and selection of components can insure that the device is sufficiently reliable that users are not tempted to bypass it.

A number of other comments were received that were identical to comments that had been received in response to the proposal and that are outside the subject matter for which the additional comment period was provided. The Commission's staff has considered these comments but finds nothing in them that would warrant any change in the Commission's conclusion concerning these issues. The Commission's decisions on these matters are explained at the appropriate portions of the remainder of this preamble.

After considering all of the data available to it, including all the comments received, the Commission concludes that, by December 31, 1981, rotary power lawn mower manufacturers will be able to incorporate reliable and safe brake-clutch mechanisms into their products, if they choose that method of complying with the requirements of the standard.

(ii) *Effect of fertilizers and of storage on brake-clutch system.* Several commentors express the view that fertilizers on the grass may cause brake-clutch failures and that not enough is known about the effect of fertilizers on brake-clutch systems to allow mower manufacturers to use such systems. Other commentors suggest that a mower manufacturer must consider the effects of periods of storage and nonuse of mowers on the reliability of brake-clutches.

These comments are speculative at best. A manufacturer of mowers must take many things into consideration when designing a lawn mower. The effect of fertilizers and nonuse are merely two of the conditions that must be considered. Furthermore, there is no evidence in the test data submitted to the Commission that fertilizers or nonuse of a mower will have an adverse effect on brake-clutch systems if they are used in mowers. The Commission also notes that at least two mower manufacturers are currently manufacturing mowers that include a brake-clutch mechansim.

(iii) *Defeat of brake-clutch mechanisms.* One commentor has suggested that, if the brake-clutch control device is tiring to hold, consumers are just as likely to defeat a brake-clutch mechanism as they are to defeat an engine kill with manual start mechanism. Other commentors have expressed the view that it is unlikely that consumers will defeat such a system.

The Commission does not agree that consumers are as likely to defeat a brake-clutch mechanism because it is tiring to hold as they are to defeat a blade control system that uses an engine kill system with a manual start mechanism. If the brake-clutch mechanism is tiring, all an operator need do is release the control lever for a few seconds. Further, manufacturers can be expected to be aware of the need to make operating controls, particularly frequently used ones, acceptable to the consumer. Lack of such acceptability could reasonably be expected to have an adverse effect on sales.

The 50 mowers tested by the GSA, mentioned above, were supplied to five federal agencies in various locations to provide a broad cross section of user demands. The mowers were used both by light users (those who operated the mower 2 hours or less per day) and heavy users (those who operated the mower for over 4 hours per day.) 72% of the users responded to a GSA questionnaire. Of those responding, 72% indicated that they cut the grass when it was high or very high. In regard to the performance of the brake-clutch, 66% of the light users stated the clutch was easy or very easy to use. Another 33% stated it was neither easy nor hard to use. 50% of the heavy users stated the clutch was either easy to use or neither hard nor easy. While 33% of the heavy users stated the clutch was hard to use and 17% said it was very hard to use, it must be recognized that, these persons used the mower for 4 hours or more at a time and it is questionable whether consumers mowing the grass around their house would use a walk-behind mower for that length of time. Moreover, 100% of the light users and 66% of the heavy users in the GSA tests stated that they liked the brake-clutch as a safety feature.

A second manufacturer demonstrated his brake clutch equipped mower to the Commission staff in September 1978. As part of the field demonstration, a small area covered with extremely high grass was mowed by several persons unconnected with the manufacturer. None of these users indicated any dissatisfacton with the force required to actuate the brake-clutch lever or keep it actuated.

The president of the mower industry trade association, OPEI, who is also the Chairman of the Board of Directors of a major power mower manufacturer, has stated that the problem of the blade control being too hard to hold was simply one of providing sufficient mechanical advantage in the control and should not pose any significant problem for manufacturers to solve (meeting with CPSC Chairman, October 17, 1978).

In view of existing data on brake-clutch mechanisms, the Commission is unable to conclude that mower operators are likely to defeat the brake-

clutch system because they may find it tiring. Also, the Commission has no reason to expect that during the 3 years prior to the effective date of Subpart A, the mower industry will not insure that brake-clutch control levers are easy to use if brake-clutch mechanisms are the means chosen to meet the blade stop time requirements of the standard.

(iv) *Warning of brake-clutch failure.* One commentor suggested that the commission should require mowers that incorporate a brake-clutch system to also include a device that produces an audible or visual warning if the clutch fails to disengage the blade and the blade continues to rotate when it should have stopped.

The Commission believes that manufacturers who are concerned that their brake-clutch system may fail in such a way that the mower blade is rotating when it should have stopped may wish to incorporate such a feature in their lawn mower. One mower manufacturer already incorporates in its mower a visual warning that the blade is rotating, and the Occupational Safety and Health Administration requires such a device in agricultural tractors (29 CFR 1928.57). The Commission, however, has decided not to require such a mechanism in the standard it is issuing at this time. The data available to the Commission on brake-clutch mechanisms does not include any data clearly indicating that a clutch mechanism has failed in mode where the blade is rotating when it should have stopped. The Commission believes that manufacturers have the technology to develop brake-clutch systems that will "fail safely", that is, if they fail to operate they will do so in a manner where the blade does not turn. Therefore, the Commission sees no reason to conclude that brake-clutch mechanisms will fail in a manner that would require a visual or audible warning. Further, the effectiveness of such a warning is speculative in that the consumer may not realize the meaning of a warning which occurs only in the event of an infrequent equipment failure.

On this same topic, a mower manufacturer stated that there would be 1 brake-clutch malfunction for every 1000 brake-clutch engagements, that for every 1000 brake-clutch malfunctions there would be 1 injury, and that in 10 years brake-clutch failures would therefore be associated with over 16,000 injuries per year. These figures, however, appear to be assumptions on the part of the manufacturer and not based on any data. The Commission has no reason to believe that these figures are valid, particularly since the brake-clutch data supplied to the Commission show that brake-clutches are capable of a much lower malfunction rate.

f. *Momentary release of blade control lever.* Several commentors believe the blade stop time requirements of § 1205.5(a)(1)(iii) of the proposal provide that if the operator momentarily released the blade control system, the engine could not be immediately reactuated. The Commission did not intend this result. The Commission interprets this provision, now found at § 1205.5(a)(1)(iii) of the final standard, as not preventing the blade from immediately resuming normal operating speed if the operator reactuates the blade control. Of course, the mower must meet the blade stop time requirements of the standard if the blade control is not reactuated.

g. *Actuation of controls.* Several commentors believe proposed § 1205.5(a)(3) is unduly restrictive because it requires the operator to actuate two separate controls, one of which must be the blade control, before blade operation may resume. The commentors suggest rewording this section to allow the operator to make two separate motions by the same actuating means.

The purpose of this requirement is to prevent the operator from unintentionally restarting the mower blade, for example by accidentally coming into contact with the blade control. This provision does not require manufacturers to install a second separate mechanical device on the mower. They may incorporate this second "control," as it was referred to in the proposal, into the blade control system if two distinct and separate actions are necessary to restart the blade. The intent of the requirement, that accidental or unwitting contact with the blade control will not restart the blade, can be achieved by using a separate device or by incorporating a double-action feature into the blade control. This requirement, which now appears in § 1201.4(a)(2), has been reworded to make it clear that this alternative is permissible.

h. *Location of controls.* One commentor disagrees with the requirement of § 1205.5(e)(1) of the proposed standard that, for lawn mowers whose blades start rotating when the power source starts, the starting controls must be in the operating control zone. The commentor states that the purpose of this provision is to place the operator in the "operator position" when the mower is started and that whatever design the manufacturer elects to use to accomplish this objective should be allowed.

From Commission injury data, it is estimated that over 2000 injuries are treated each year in hospital emergency rooms due to foot contact with the mower blade when the mower is being started. These injuries generally occur when the operator's foot slips under the mower housing in starting the mower. These injuries should be eliminated if the starter controls for mowers whose blades start rotating when the mower is started are located in the operator control zone, because the operator will be separated from the blade.

It should be kept in mind that, since the Commission is not including the "easy restart" criteria as part of the final standard, the only mowers that are likely to have the blade start when the power source starts are mowers with power restart, because all other mowers will have some means for disconnecting the blade from the power source. Some presently produced power restart mowers have a key start located on the engine. Since the Commission is not requiring 360° foot probing of the mower, if a person attempted to start the mower from this position (while holding the blade control), their foot could come into contact with the blade from the side of the mower. These power restart controls should be relatively easy to relocate, and the Commission believes that it is preferable (and less of a burden on the manufacturer) to insure that these controls are relocated than it would be to require foot probing of the sides of the mower. Tests performed for the Commission by NBS (NBS memorandum, September 14, 1976) show that the area on the mower engine where key starts could be located is within the area which can be reached by a person who is also contacting the blade control.

The Commission has not accepted this comment because it does not indicate what other provisions could address this hazard. The Commission does not know of any, and the comment does not define "operator position" or suggest criteria for determining that the operator would remain in it while starting the mower. In addition, starting effort and recoil should not be a problem with power restart mowers, which are the only ones to which the requirement is likely to apply. Therefore, the Commission sees no need to change this requirement. Of course, any manufacturer who does develop a design that addresses this hazard could petition the Commission to amend the requirement.

i. *Shut-off control.* Commentors stated that proposed § 1205.5(d), which required the inclusion of a shut-off control, is not necessary since all mowers produced today already contain a shut-off control.

The Commission agrees that since virtually every mower produced today has a shut-off control, this provision is not necessary. Therefore, this require-

ment is not included in the final standard.

WARNING LABEL (§ 1205.6)

A number of comments were received concerning the proposed label warning of the danger of blade contact.

The proposed standard would have required rotary mowers to have 2 labels, one near the discharge chute and another where it could be seen by the operator from the normal operating position. One comment suggested that one label should suffice. The Commission agrees that one label located as near as possible to the discharge chute should be sufficient. This area is perhaps the most likely area of the mower that the operator would intentionally approach, and the Commission believes that a label located so that it is likely to be seen by users as they approach that area would be likely to come to the attention of the operator. The Commission realizes that the blade control should protect operators who intentionally approach the discharge chute, unless the blade is still turning because they continue to hold the blade control or approach in less than three seconds. However, the Commission believes that if the label is in this location the user will be more aware of it than if it is in other locations. If the mower has no discharge chute, the label may be located in any position that is conspicuous to the operator from the normal operating position.

It was also suggested that the pointed area of the label be changed from the top of the label to the bottom. This would have the effect of having the label point toward the hazard of the discharge chute and housing edge. The Commission agrees that this is a desirable feature that should increase the effectiveness of the label by directing attention to the most hazardous area, and it is incorporated in the label requirement for the final standard.

A commentor submitted a suggested alternative label. Instead of the proposed label's showing of a hand with a red diagonal line across it, the suggested label depicts a blade-like object cutting into the forefinger of the hand. A majority of the Commission believed that the label suggested by the commentor would be more graphic and potentially more effective then the label depicted in the proposal. Accordingly, the label required by the final standard shows a blade cutting into the forefinger of the hand, instead of the proposed red line across the hand, but does not show the blood that was considered to be objectionable in the label that was recommended to the Commission by Consumers Union, who did the initial development work on the standard. The cost to manufacturers to provide either the proposed label or the final label of Fig. 7 should be the same.

MISCELLANEOUS COMMENTS

a. *Applicability of NEISS data.* One commentor states that the Commission's proposed standard is based on injury data accumulated during the 1974-75 mowing seasons. It argues that "these data—which were generated while mowers complying with the new voluntary safety standard ANSI B71.1-1972, and supplements, were just coming onstream—are now unacceptable for use in the current evaluative process." The data that the Commission has received since the proposal confirms the need for the blade control requirements, and the most recent voluntary standard does not appear to contain additional provisions to protect against blade contact injuries to the hand. The voluntary industry standard, ANSI B71.1, was first issued in 1960. The latest revision was in 1972, with supplements in 1974 and again in 1977. The provisions of that standard as they affect contact between a mower operator's hand and the rotating blade were not changed in the 1974 and 1977 versions of the standard. In fact, the voluntary standard does not directly address the hazard of the hand coming into contact with the blade. Since 1972, the voluntary standard has been modified to address foot contact injuries by the addition of requirements for a rear trailing shield strength test and a handle strength test.

The Commission has compared National Electronic Injury Surveillance System (NEISS) data for 1975 to NEISS data for 1977. The following table shows that there is no statistically significant difference in the injury data concerning the numbers or percentages of hand and foot injuries:

BODY PART INJURIES

| | Hand | Foot | Other |
|---|---|---|---|
| 1975 | 32,766 (49%) | 14,928 (22.5%) | 18,525 (28%) |
| 1977 | 33,229 (50.6%) | 13,686 (20.8%) | 18,779 (28.4%) |

Also, because there has been no change in the ability of voluntary standard to reduce blade contact hand injuries, there is no reason to believe that the data for later years will show a reduction in this type of injury.

Because lawn mowers that comply with the 1977 voluntary standard are just now coming "on-stream," the Commission has not been able to use injury data to establish how effective that standard might be in reducing foot contact injuries. (The additional requirements that appear most related to foot injuries are requirements for the strength of shields and handles.) However, the Commission has considered the provisions of that standard in deciding on the requirements of the mandatory standard.

It is possible that the rear shield required by the voluntary standard may meet the Commission's requirement for foot probing the rear of the mower. However, since the voluntary standard does not require a blade control, it does not specifically protect against foot injuries at the side and front of the mower. Also, the Commission considers the voluntary standard's requirements for foot probing the discharge chute to provide less protection than the Commission's mandatory requirement.

b. *Blade stop time measurement.* A few commentors state that visual observation of blade stop time allowed in the blade stop time test in proposed § 1205.5(b) is not sufficiently accurate and that a more accurate means of determining blade stop time should be used.

The Commission agrees that for enforcement purposes visual observation of blade stop time is probably inadequate since there may be slight variability among testing personnel. Therefore, in the final standard, no specific means for measuring blade stop time is required. The Commission intends to test for blade stop time through an electronic system that has an accuracy of 0.1 second with a high order of repeatability. Manufacturers, however, are not restricted as to the means they must use to measure blade stop time, as long as the blade in fact stops within 3 seconds after the blade control lever is released.

c. *Wear and tear on engines.* One comment states that, if engine kill is used as a method of meeting the standard, the increased amount of engine restarting that will occur will increase the rate of wear on the engine and will require more frequent replacement of the mower.

No data were provided by the commentor to support the comment, and the Commission is unaware of any supporting data. No comments addressing this contention were received from the lawn mower industry. More-

over, lawn mower instruction booklets accompanying lawn mowers produced today frequently recommend that the mower be turned off, for example, when the operator empties a grass catcher or the operator leaves the mower. A lawn mower presumably is designed with these instructions in mind. Accordingly, it can be concluded that the starting of mowers does not cause unreasonable wear rates. Furthermore, manufacturers are free to use means other than engine kill to comply with the blade stop requirements.

d. *Useful life of mowers.* In its preliminary economic analysis of the proposed lawn mower standard dated February, 1977, the Commission estimated consumers retain power mowers for 7 years, on the average. A mower manufacturer comments that based on a 1976 survey of previous mower ownership, a significant number of people keep mowers beyond that time, and only 22% of mowers are scrapped when they are replaced. It suggests that in view of this data it may take 20 years before all mowers are replaced with mowers that meet the standard. The manufacturer implies that no standard should be issued since it will take so long before mowers that comply with the Commission's standard saturate the marketplace.

The Commission disagrees with the implied suggestion that because it may take a number of years before mowers that meet the Commission's standard are in the marketplace, no standard should be issued. The Commission currently estimates that lawn mowers are kept an average of 8 years before they are replaced (memorandum from CPSC's Division of Economic Analysis dated September 9, 1978). Even if this time frame were longer, that would not be an adequate reason for never issuing a standard. While achieving the full potential for injury reduction or elimination would take some time, injury reduction would occur once the mowers were finally purchased by consumers. In addition, to the extent that any longer mowing life data would also apply to complying mowers, the cost attributable to the standard's requirements would be less for each year of use of the complying mower.

e. *Change in position of power mowers in CPSC Hazard Index.* A number of commentors observed that, from 1975 to 1976, power mowers moved from 3rd place on the CPSC Hazard Index to 17th place. They contend that this indicates the voluntary standard has been effective in making power mowers safer.

The Hazard Index is a numerical ranking of products based solely upon NEISS injury frequency and severity surveillance data, adjusted to give greater weight to injuries to children under 15 years of age. It was originally developed as a management tool to generate a list of potentially hazardous products for further study. However there is a tendency for the public to use the index for purposes for which it was not designed. A change in the ranking of a given product category from one year to another may be the result of a real difference in the estimated number and/or severity of injuries for a product category, either for the total population or for the population less than 15 years old. But it could also be due to random variation in the injury frequency and severity associated with a product category. In particular, it could be caused by the weighing procedure used in the computation of the Age-adjusted Frequency Severity Index (AFSI) value.

From 1975 to 1976, the NEISS estimate for the number of power mower injuries (from all types of mowers) treated in hospital emergency rooms decreased from 63,306 to 56,681 injuries. The Commission does not believe this change is statistically significant, since it is well within one standard error of the estimate and, therefore, within the range of a chance variation in the data.

In order to determine some of the characteristics of the computation of the AFSI which may have contributed to the change in ranking for power mowers reflected in the Hazard Index, the Commission conducted an analysis of the power mower data. In order to compute the AFSI, injuries of a particular diagnosis, body part, and case disposition are assigned a severity value. This severity value, which is based upon the judgment of a panel of medical personnel, can be one of eight incremental values. These values increase exponentially, each value being double the value below it. After being assigned an initial severity value, the severity value of an injury may then be increased 2½ times if the victim is less than 15 years old. This results in a possible severity value ranging from 10 to 6290. This value is then multiplied by the statistical weight of the particular NEISS hospital in which the injury was treated. NEISS hospital weights range from 2 to 500. This increases the range of possible severity values to 20 to 3,145,000. These attributes of computing the AFSI may result in exaggerated movement of products on the Hazard Index from one fiscal year to the next. After an exhaustive examination of power mower data, it was found that chance variations of injuries in the highest severity groups were the primary reasons for the drop of power mowers in the Hazard Index from 1975 to 1976. In 1975, the average hospital weight for these injuries was 50.2. In 1976, the average hospital weight was 17.4. Averages for all product categories in these severity categories for those years were 27.9 and 26.1, respectively.

This explains the apparently dramatic shift of power mowers in the Hazard Index. It should be noted that for 1977, power mowers moved to 6th place in the CPSC Hazard Index with an estimated 67,070 injuries treated in emergency rooms (for all types of mowers). This would seem to reflect a more moderate distribution of hospital weights among severity categories.

f. *Shock device.* A comment suggested that instead of the blade control requirements, the Commission should allow the use of a device that would apply an electric shock to persons who reached under the mower or into the discharge chute. After considering this comment, the Commission concludes that it is not feasible. First, no apparatus capable of achieving this result has been suggested so that the Commission could more specifically evaluate all aspects of the idea. Generally, the Commission believes that it is preferable to have protective safety requirements rather than punitive ones. In this case, there is no established level for the intensity of the shock that would be required to deter the user without subjecting the user to a risk of injury associated with the shock itself. Also the effect of wet ground or possible malfunctions that could increase the intensity of the shock cannot be predicted. For these reasons, the Commission believes that such a requirement would not be as effective or reliable as the blade control requirements that are included in the final standard.

g. *Key requirement.* One commentor questions why a particular requirement which was recommended by the offeror was not included in the proposed standard. This requirement was essentially that a lock and key system must be incorporated in the mower design in order to prevent unauthorized use of the mower. The Commission is aware that some present mowers incorporate such a design and recognizes that this design can prevent unauthorized use. However, the Commission does not know of any significant injury pattern caused by unauthorized use of unlocked mowers. Although the Commission can appreciate the possibility that an unauthorized child may occasionally start a mower, the Commission has no data showing that this risk is sufficient to warrant a mandatory requirement.

h. *Economic effects of the standard.* The Commission received a number of comments on the economic effects of the proposed standard. The findings of the Commission's staff concerning the economic aspects of the final standard are contained in the CPSC report, *Economic Impact of Blade*

*Contact Requirements for Power Mowers*, January 1979. This report is a revision and updating of an earlier staff report that was referenced in the proposal, and the conclusions of the earlier report relevant to the blade contact requirements have not significantly changed.

1. *Cost and price effects.* The changes in manufacturing costs and retail prices that are expected to accompany the power mower rule evoked a number of specific comments. The mower industry trade association expressed the view that consumers, when given the choice, will not pay a premium for safety, implying that the price changes expected to accompany the rules would not be acceptable to consumers. This sentiment was expressed by other commentors who said that the expected price increases due to the standard were excessive.

The American Rental Association (ARA), a national trade association of rental firms, said that since the price increases will fall more heavily on the lower priced mowers, the standard imposes the greatest financial hardship on those consumers who can least afford it.

The Commission estimates that the average retail price increase caused by compliance with the requirements of the standard would be about 24 percent.

In general, the expected price increases estimated by Stanford Research Institute (SRI) for the mower industry trade association are not significantly different from the estimates made by the Commission. The issues of increased costs and prices are therefore not centered on how much the expected increase might be, but rather on whether the increase is accompanied by corresponding safety value and, secondly, on the issue of whether the proposal impacts relatively more adversely on lower income groups.

The legislative history of the CPSA indicates that unreasonable risk of injury is to be determined by balancing the nature and degree of the risk against a rule's effect on the product's utility, cost, and availability to the consumer. (H.R. Rep. No. 1153, 92nd Cong., 2nd Sess. 33 (1972).) Section 9(c) of the act, furthermore, requires the Commission to make certain findings for inclusion in consumer product safety rules, including findings concerning the nature and degree of the risk of injury, the need of the public for the products subject to the rule and the rule's effect upon the utility, cost, and availability of such products, and any means of achieving the objective of the rule while minimizing adverse effects on competition or disruption of manufacturing and other commercial practices.

As a matter of policy, the Commission considers the costs and benefits before issuing regulations under the acts it administers. The Commission also considers on a preliminary basis the costs and benefits of its actions in setting project and program priorities. (See—Commission Policy on Establishing Priorities for Commission Action, 16 CFR 1009.8).

With this background in mind, the Commission questions the utility of quantitative cost-benefit analysis in the health and safety area. While it is desirable that benefits exceed costs, it is not always necessary or possible to show that they do through the calculation of a precise numercial ratio. Although it is often helpful to do cost benefit analysis, it is simply too crude an instrument at its present state of development in the fields of health and safety for a ratio of less than one to be a necessary condition for regulation. As stated in the legislative history of the Consumer Product Safety Act, "[t]here should be no implication * * * that the Commission would be required to conduct and complete a cost-benefit analysis prior to promulgating standards * * *" (H.R. Rep. No. 1153, 92nd Cong., 2nd Sess. 33 (1972)).

It is difficult to assign monetary values to human suffering in a meaningful way for regulatory purposes. The issues involved in issuing health and safety regulations are likely to require judgments based on values rather than numerical weights. Therefore, while quantified cost-benefit analyses are sometimes used as a decisional tool, the Commission bases its decision to issue consumer product safety rules on a non-numerical balancing of the benefits and costs. However, the following discussion is included to address (1) the comments that contend the standard's benefits will not justify its costs and (2) the Council on Wage and Price Stability's comment that only "those segments of the CU standard which can be shown to have benefits larger than costs should be implemented."

Retail prices of walk-behind mowers are expected to rise an average of $35 due to the regulations. Since the average life of a mower is estimated to be about eight years, a complying mower will cost about $4.40 more per year. The Commission estimates the cost of blade contact injuries associated with walk-behind mowers at $253 million per year, exclusive of pain and suffering. Since there are about 77,000 such injuries occurring each year, each injury results in average costs of about $3,300. Since there are 40 million mowers in use by consumers, there is a 1 in 520 chance of incurring an injury that will cost about $3,300, exclusive of pain and suffering. The expected value of the injury cost associated with each mower is thus about $6.35 per year. If the standard is effective in eliminating 77 percent of the injuries that account for 83 percent of injury costs (CPSC estimates, see Appendix of *Economic Impact of Blade Contact Requirements for Power Mowers*, January, 1979), then each year, for an average of $4.40 additional cost per mower, a savings of about $5.30 can be expected. If we include a factor for pain and suffering, the savings would be much greater. The above analysis demonstrates that the additional price increases that may accompany the standard are more than justified in terms of safety.

In its August, 1977, comments, the Council on Wage and Price Stability states that, "Both the CPSC and the SRI cost estimates neglect two important aspects of costs:—first, since the increase in mower prices would result in a decline in sales, a cost would be incurred by those individuals who would have purchased mowers at the lower prices * * *" and—"Secondly, both the SRI and the CPSC analyses mention, but do not address, the possibility of decreased mower utility which would result from the standard."

The first point that the Council attempts to make is not valid because a consumer will not be faced with the decision to purchase the *same* product at a higher price. Due to the standard, mowers will incorporate safety features. Although the Council states that consumer demand will decline due to the standard, demand may increase under certain conditions. If consumers perceive power mowers to be safer due to the standard, the demand for mowers, as reflected in the willingness of some consumers to pay more for safety, may increase enough to offset any reduction in demand caused by any price increase.

The second cost estimate that the Council claims the Commission neglected is that of "the possibility of decreased mower utility which would result from the standard." An estimate of the cost of lost utility was not made because such losses were not considered to be significant. It has been stated that if blade controls were not accompanied by brake-clutch devices or easy restart devices as specified in the proposal, cutting time might be increased because of the time required to restart the mower on numerous occasions during each cutting session. However, since the final standard does not permit the blade stopping by engine kill if only manual restart is available, any increase in cutting time should be insignificant.

The Commission's analysis of the expected economic impact of the blade contact provisions is intended to identify all the adverse economic effects that could be caused by the standard.

All of these adverse impacts may not be applicable to any one manufacturer, and manufacturers may develop solutions to the performance criteria of the standard that are cheaper than those that are presently foreseen. Even now, mowers that appear to meet the blade contact requirements are becoming available in the marketplace. It is likely that the costs of compliance will decline as economies of scale are achieved in the production of safety-related components and as manufacturers gain experience with the standard. A more detailed discussion of the costs associated with the various provisions of the standard is given under the section of this notice concerned with the findings required by section 9(c) of the CPSA ("STATUTORY FINDINGS") and in the Commission staff's Economic-Impact Statement.

The ARA claims that since the proposed standard would result in the greatest price increases among the lowest price mowers, the standard imposes the greatest financial hardship on those consumers who can least afford it. Although this may be true in some cases, it is not as significant an objection to the proposals as price considerations alone might suggest.

Generally speaking, it will cost more to bring mowers that currently sell for relatively low prices into compliance with the standard than it will for mowers that currently sell for higher prices. This is because more features on these lower priced mowers will have to be changed in order for the mowers to comply. The reason for this is thought to be that low priced mowers are often produced by small firms that do not have the engineering expertise that may be available to large firms. In addition, the firms may be unwilling to incur the costs of instituting safety-related changes in a competitive price market. However, to the extent that the standard is cost effective in relation to costs of injury, it would be to the purchaser's economic advantage, on the average and at any income level, to purchase a safer mower.

The ARA claims that the Commission understates the total cost of the proposals because it "fails to adequately represent the full consumer cost and fully ignores manufacturing and societal costs." This claim is erroneous. If anything, the costs to the consumer may be overstated since competitive forces may lead to lower retail price increases than those estimated by the Commission. In addition, not all the adverse effects identified by the Commission may be applicable to a particular manufacturer. The Commission's estimates of price increases for mowers assume that the manufacturer and the distributor will set their prices using their customary markups over costs for the safety features required by the standard.

The claim that manufacturing costs were ignored is also incorrect. The Commission's preliminary economic assessment discussed the effects of the different requirements on manufacturing costs. Manufacturing costs were the prime consideration behind the expected change in prices. The Commission's final report on the economic impact of the blade contact requirements confirms its earlier preliminary assessment.

Societal costs were also considered. Although costs such as effects on small businesses, changes in employment, effects on customary business practices, changes in competition, and the like are hard to express in monetary terms, they have been brought to the attention of the Commission in staff studies of the economic impact of the regulation and are discussed above in the section relating to the findings required by section 9(c) of the CPSA ("STATUTORY FINDINGS").

2. *Small firm considerations.* The impact of the proposed standard on smaller manufacturers was addressed by seven commentors. Most of the comments stated that small firms with less volume over which to spread the increased capital costs would be at a cost, and therefore price, disadvantage and perhaps be forced out of business. Some of the commentors indicated that needed capital would be difficult for many smaller firms to acquire. Some said that the exit of small firms would result in greater concentration of the industry among the larger manufacturers.

The most important factor that will determine how much costs will change is how many changes to current production are necessary to comply with the requirements of the standard. The degree of deviation from compliance is not necessarily related to the size of the firm involved. Although some small firms may be at a disadvantage because their output is not in compliance, it is also true that those small firms producing a mower close to compliance will have a relative advantage. Similarly, a larger firm with many models out of compliance will have a burden that small firms with few models may not have.

Acquisition of capital to redesign products to comply with the standard may not be relatively more difficult for smaller firms. The financial condition of a firm will be affected by many factors. A firm that is in financial difficulties may find that the standard adds to those difficulties, regardless of size. Exit of small firms from the industry is not expected to occur on a scale that will significantly affect industry concentration.

3. *Inflationary impact.* In a series of related comments, the Council of Wage and Price Stability (CWPS) expressed concern about the alleged inflationary impact of a power lawn mower safety standard. (See: (1) CWPS comments on CU's recommended standard (CWPS-91; October 14, 1975); (2) CWPS comments on the proposed standard; August 12, 1977); and (3) CWPS comments on CPSC's Policy on Establishing Priorities (CWPS-178; August 17, 1976).)

Although the Council's comments of October, 1975, and August, 1976, are not directly applicable to the May 1977, proposal, they provide some insight into the assumptions upon which the August, 1977, comments are based. The comments on the CU recommended standard review the CU economic analysis that accompanied the CU standard and also review an economic analysis of the CU standard that was prepared by Stanford Research Institute (SRI) for the Outdoor Power Equipment Institute (OPEI).

Many of the comments submitted by CWPS concerning the standard's potential for inflationary impact relate to technical economic concepts. Their arguments have been fully answered by the Commission's staff (memorandum dated February 13, 1978; Review of Comments to the Proposed Lower Lawn Mower Regulations). Basically, the Commission believes that the increased cost of complying mowers, which is estimated to be $4.40 per year over the expected life of the mower, will have no significant effect on the general price level. As explained above in Section E of this preamble ("STATUTORY FINDINGS"), the anticipated costs of the standard are reasonable in relation to the expected benefits. It should be kept in mind that although the standard can be expected to increase the price of mowers, consumers will not be paying the higher price for the same mower as before. The mowers that comply with the standard will incorporate safety features that were not previously provided, and the increased value received should more than offset the increase in price.

### G. Application of the Standard to Rental Mowers

Under the Consumer Product Safety Act, it is unlawful for any person to distribute in commerce or offer for sale any product which does not conform with an applicable consumer product safety standard. In view of the definitions of "to distribute in commerce" and "commerce" in section 3(a)(11) and 3(a)(12) of the act, the Commission considers that each time a consumer product is rented, the product is distributed in commerce. Therefore, a rental firm that rents a consumer product manufactured after the

effective date of an applicable consumer product safety standard would commit an unlawful act if the product did not comply with the standard.

The Commission realizes, however, that it may be impractical from an economic standpoint to require that rental mowers be tested for compliance with all the requirements of the standard throughout the entire rental life of the mower. It may be that the economic burden on rental firms to frequently test their rental mowers to ensure that they still comply would be unreasonable in relation to the safety benefits to be obtained. In the first place, only a small portion of the total lawn mower production is used for rental purposes. In addition, there is no evidence available to the Commission that the safety-related characteristics of either rental or consumer-owned mowers are likely to deteriorate over time. (When the mowers are sold to the rental firm, they must comply with the standard.)

Another question applicable to rental mowers is the extent to which the rental firm should be responsible for insuring that the mower complies with Part 1205 at the time the mower is sold by the firm.

Since the standard only applies to walk-behind mowers that are manufactured after the effective date of the standard (December 31, 1981), the rentals and sales of old rental mowers that may be affected by the standard will not occur for nearly 3 years. Accordingly, the Commission intends to propose at a later time for public comment an amendment to the standard concerning the applicability of the standard to rental transactions and to the sale of used rental mowers. After considering any comments that are received on the proposed policy, the Commission will issue a final rule concerning rentals and sales of rental mowers. This would be issued a sufficient time before the effective date of the standard that rental firms would have adequate time to institute whatever procedures might be appropriate for their degree of responsibility under the standard. In the meantime, the standard being issued at this time will not apply to rental transactions or to the resale of used rental mowers by rental firms.

### H. Product Certification and Testing

Section 14(a) of the CPSA requires every manufacturer and private labeler of a product which is subject to a consumer product safety standard to issue a certificate which shall certify that the product conforms to all applicable consumer product safety standards, shall specify any standard that is applicable, shall state the name of the manufacturer or private labeler issuing the certificate, and shall include the date and place of manufacture. The certificate is required to accompany the product or be otherwise furnished to any distributor or retailer to whom the product is delivered.

Section 14(a) also requires that the certification that the product conforms to all applicable consumer product safety standards must be based on a test of each product or upon a reasonable testing program. Section 14(b) of the CPSA provides that the Commission may issue rules that require a specified reasonable testing program. In the case of the safety standard for walk-behind rotary power lawn mowers, however, the Commission has considered the need for requiring a specific testing program and has concluded that it is unnecessary. Power lawn mowers are a precision device, and the manufacturers' normal quality control procedures should be sufficient to determine that the products that are being manufactured at any particular time comply with the standard. Even for the potentially variable characteristic of blade stopping time, the manufacturers can be expected to continue to test their production periodically to determine that their products will not be subject to recall by the Commission for violations of the standard.

Section 14(c) of the CPSA authorizes the Commission to issue rules requiring the product to bear a label containing information similar to that required to be on the certificate. In addition, section 16 of the CPSA authorizes the Commission to issue rules requiring manufacturers, private labelers, and distributors of consumer products to establish and maintain records reasonably required to determine compliance with rules or orders prescribed under the CPSA.

Elsewhere in this issue of the Federal Register, the Commission is proposing a rule that will require walk-behind rotary power lawn mowers to bear a label for certification purposes containing the following:

1. The statement "Meets CPSC blade safety requirements for walk-behind rotary power mowers."
2. Model identification (except when model identification appears elsewhere on the mower).
3. The name of the person or firm issuing the certificate.
4. The location where the product was principally assembled.
5. The month and year the product was manufactured.

The proposed rule will also require manufacturers and private labelers of walk-behind rotary power lawn mowers to maintain records sufficient to show that their certification is based on a reasonable testing program or on a test of each product.

An explanation of the need for these requirements is contained in the preamble of the proposed labeling and recordkeeping rule.

### I. Date of Promulgation

Section 11 of the CPSA (15 U.S.C. 2060) indicates that petitions for judicial review of consumer product safety rules must be filed within 60 days of the date the rule is "promulgated". The courts have indicated that agencies have considerable discretion in determining the manner in which their rules or actions are "promulgated". *Industrial Union Dept., AFL-CIO* v. *Bingham*, 570 F. 2d 965 (D.C. Cir. 1977). In the absence of any indication by the agency of a particular time for promulgation, however, a rule could be condidered to be promulgated when it is voted on by the Commission in a public meeting or when the Federal Register notice announcing the rule is signed by the Commission's Secretary. Since there can be certain perceived advantages in being the first party to file for judicial review of a standard, it sometimes happens that there is a "race to the courthouse" to file petitions for review as soon as possible after a standard is issued by the agency.

The Commission believes that a better procedure to give the maximum amount of guidance possible to the courts and interested persons is for the Commission to designate a time of promulgation that is at a time after all parties have had an opportunity to review the text of the Federal Register notice that issues the standard. This procedure would provide all interested persons—including those that might not be located in Washington or be able to afford to send a representative to Washington—an equal opportunity to review the final standard as published in the Federal Register and then determine in an orderly fashion whether to seek judicial review. For this reason, the Commission specifically announced at its January 25, 1979, meeting that the standard would be "promulgated" on the tenth day after it is published in the Federal Register.

Despite the Commission's announcement of the promulgation date, however, 2 petitions for review were filed immediately after the Commission vote on the standard on January 25, 1979. (*Hayward* v. *CPSC*, D.C. Cir. No. 79-1100; *Southland Mower co., et al.* v. *CPSC*, 5th Cir. Civil Action 79-1203). The Commission believes that these petitions were not filed within the period of time provided by the statute governing such petitions. Accordingly, for the policy reasons stated above, and because some parties may have delayed filing petitons in reliance on the Commission's statement that pro-

mulgation would not take place until 10 days after publication, the Commission intends to oppose as untimely any petitions for review that are filed prior to noon EST on the tenth day after publication of the final standard in the FEDERAL REGISTER. The Commission believes that the decision on which forum considers review of the Commission's action is more appropriately based on the convenience of the parties and the orderly administration of justice under applicable legal standards than on an unseemly "race to the courthouse."

For the reasons given above, the Commission designates the time of promulgation of Part 1205 as 12:00 noon, Eastern Standard Time, on February 26, 1979.

Section 9(a)(1) of the Consumer Product Safety Act (15 U.S.C. 2058(a)(1)) requires that within 60 days after the publication of a proposed consumer product safety rule, the Commission shall either (1) promulgate a rule respecting the risk of injury associated with such product or (2) withdraw the applicable notice of proceeding, unless the Commission extends the 60-day period for good cause and publishes its reasons in the FEDERAL REGISTER. In the power mower proceeding, the Commission has previously extended the time for either issuing a final standard or withdrawing the proposal to February 15, 1979, for requirements addressing blade contact with walk-behind mowers, and to December 31, 1979, for other risks of injury addressed by the proposed standard, such as those for thrown objects and for riding mowers (May 5, 1977, 42 FR 23052; October 7, 1977, 42 FR 54573; June 7, 1978; 43 FR 24097; 43 FR 60955, December 29, 1978).

For the reasons stated above, the Commission finds that good cause exists for extending, and hereby extends, the promulgation date of the blade contact standard until February 26, 1979. The period ending December 31, 1979, for other requirements of the proposal is not affected by this extension. However, the Commission may in the future, for good cause shown, extend either of these periods as appropriate.

J. ENVIRONMENTAL IMPACT

At the time of the proposal, the Commission determined that there were no significant potentially adverse environmental effects associated with the proposed standard. No comments were received disputing this conclusion, and the Commission reaffirms its preliminary determination with respect to the final standard. Accordingly, it is not necessary to prepare either a draft or a final environmental impact statement.

K. CONCLUSION

Therefore, having considered the comments on the proposal and the other data available to it, and having made the findings required by sections 9 and 27 of the Consumer Product Safety Act, the Commission concludes that the requirements of Part 1205 set forth below are reasonably necessary to reduce an unreasonable risk of injury from contact with the blades of walk-behind power lawn mowers and that, as far as is feasible, the requirements are expressed in terms of performance requirments. Accordingly, the Commission has decided to issue Part 1205 as a consumer product safety standard, combined with a section 27(e) rule for labeling.

Therefore, the Consumer Product Safety Commission amends Title 16, Chapter II, Subchapter B, of the Code of Federal Regulations by promulgating, at 12:00 noon, Eastern Standard Time, on February 26, 1979, a new Part 1205 Subpart A, reading as follows:

## PART 1205—SAFETY STANDARD FOR WALK-BEHIND POWER LAWN MOWERS

### Subpart A—The Standard

Sec.
1205.1 Scope of the standard.
1205.2 Effective date.
1205.3 Definitions.
1205.4 Walk-behind rotary power mower protective shields.
1205.5 Walk-behind rotary power mower controls.
1205.6 Warning labels for reel-type and rotary power mowers.
1205.7 Prohibited stockpiling.
1205.8 Findings.

AUTHORITY: Secs. 2, 3, 7, 9, 14, 19, 27, Pub. L. 92-573, 86 Stat. 1207, 1208, 1212-1217, 1220, 1224, 1228; 15 U.S.C. 2051, 2052, 2056, 2058, 2063, 2068, 2076.

### Subpart A—The Standard

§ 1205.1 Scope of the standard.

(a) *General.* This Subpart A of Part 1205 is a consumer product safety standard which prescribes safety requirements for certain walk-behind power lawn mowers, including labeling and performance requirements. The performance requirements of the standard apply to rotary mowers. The labeling requirements apply to both rotary and reel-type mowers. The standard is intended to reduce the risk of injury to consumers caused by contact, primarily of the foot and hand, with the rotating blade of the mower. A detailed discussion of the risk of injury and of the anticipated costs, benefits, and other factors associated with the standard is contained in § 1205.8 *Findings.*

(b) *Scope.* (1) Except as provided in paragraph (c) of this section, all walk-behind rotary and reel-type power lawn mowers manufactured or imported on or after the effective date of the standard are subject to the requirements of this standard if they are "consumer products". "Walk behind power lawn mower" is defined as a grass cutting machine with a minimum cutting width of 12 in (305 mm) that employs an engine or motor as a power source. Section 3(a)(1) of the Consumer Product Safety Act ("CPSA"), 15 U.S.C. 2052(a)(1), defines the term "consumer product" as an "article, or component part thereof, produced or distributed (i) for sale to a consumer for use in or around a permanent or temporary household or residence, a school, in recreation, or otherwise, or (ii) for the personal use, consumption or enjoyment of a consumer in or around a permanent or temporary household or residence, a school, in recreation, or otherwise." The term does not include products that are not customarily produced or distributed for sale to, or for the use or consumption by, or enjoyment of, a consumer.

(2) It is unlawful to manufacture for sale, offer for sale, distribute in commerce, or import into the United States any product subject to this standard that is not in conformity with the standard. The Commission is not applying the standard to rental transactions or to the ultimate sale of used rental mowers by rental firms.

(c) *Exclusions*—(1) *General.* Mowers that have all three of the following characteristics are not covered by the standard:

(i) A cutting width of 30 in (762 mm) or greater,

(ii) A weight of 200 lb (90.7 kg) or more, and

(iii) For engine-powered mowers, an engine of 8 horsepower (6 kw) or more.

(2) *Reel-type mowers.* Reel-type power lawn mowers need not meet the performance requirements of the standard but they must be labeled as required by § 1205.6.

§ 1205.2 Effective date.

This standard applies to all rotary walk behind power lawn mowers manufactured after December 31, 1981, except § 1205.6 *Warning labels,* applies to rotary and reel-type walk-behind power lawn mowers manufactured after December 31, 1979.

§ 1205.3 Definitions.

(a) As used in this Part 1205:

(1) "Blade" means any rigid or semi-rigid device or means that is intended to cut grass during mowing operations and includes all blades of a multi-bladed mower.

(2) "Blade tip circle" means the path described by the outermost point of the blade as it moves about its axis.

(3) "Crack" means a visible external fissure in a solid body caused by tensile, compressive, or shear forces.

(4) "Cutting width" means the blade tip circle diameter or, for a multi-bladed mower, the width, measured perpendicular to the forward direction, of a composite of all blade tip circles.

(5) "Deform" means any visible alteration of shape or dimension of a body caused by stresses induced by external forces.

(6) "Engine" means a power producing device which converts thermal energy from a fuel into mechanical energy.

(7) "Manual starting" means starting the mower engine with power obtained from the physical efforts of the operator.

(8) "Maximum operating speed" means the maximum revolutions per minute (rpm) obtainable by the engine or motor under the conditions of the particular test where the term is used. For an electrically powered mower, it is the speed attained when the mower is energized from a 60 Hz alternating current source that delivers a voltage no greater than 120 V and no less than 115 V at the power input to the mower, with the mower running. For a battery-powered mower, it is the speed attained after the battery has been fully charged in accordance with the mower manufacturer's instructions.

(9) "Motor" means a power producing device that converts electrical energy into mechanical energy.

(10) "Normal starting means" is the primary mechanism intended to be actuated by the operator to start a mower's engine or motor (e.g., the cord mechanism of a manual start engine, the switch of an electric motor, or a power start mechanism).

(11) "Operating control zone" means the space enclosed by a cylinder with a radius of 15 in (381 mm) having a horizontal axis that is (1) perpendicular to the fore-aft centerline of the mower and (2) tangent to the rearmost part of the mower handle, extending 4 in (102 mm) beyond the outermost portion of each side of the handle (See Fig. 1).

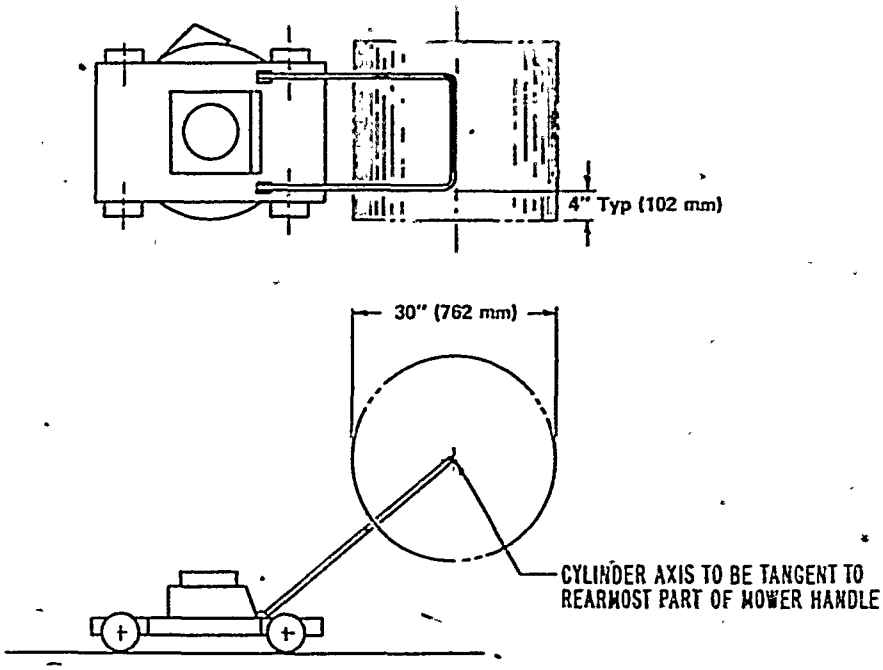


FIGURE 1 – OPERATING CONTROL ZONE

(12) "Power source" means an engine or motor.

(13) Reel-type mower means a lawn mower which cuts grass by rotating one or more helically formed blades about a horizontal axis to provide a shearing action with a stationary cutter bar or bed knife.

(14) "Rotary mower" means a power lawn mower in which one or more cutting blades rotate in essentially a horizontal plane about at least one vertical axis.

(15) "Separate" means to cause to have any apparent relative displacement induced by external forces.

(16) "Shield" means a part or an assembly which restricts access to a hazardous area. For the purposes of this Part 1205, the blade housing is considered a shield.

(17) "Stress" means a force acting across a unit area in a solid material in resisting separation, compacting, or sliding that tends to be induced by external forces.

(18) "Walk-behind power lawn mower" means a grass cutting machine either pushed or self-propelled, with a minimum cutting width of 12 in (305 mm) that employs an engine or a motor as a power source and is normally controlled by an operator walking behind the mower.

(b) Where applicable, the definitions in section 3 of the Consumer Product Safety Act (15 U.S.C. 2052) apply to this Part 1205.

§ 1205.4 Walk-behind rotary power mower protective shields.

(a) *General requirements.* Walk-behind rotary power mowers shall meet the following requirements:

(1) When the foot probe of Fig. 2 is inserted under any point within the areas to be probed during the foot probe test of paragraph (b)(1) of this section, the shields shall prevent the foot probe from entering the path of the blade or causing any part of the mower to enter the path of the blade.

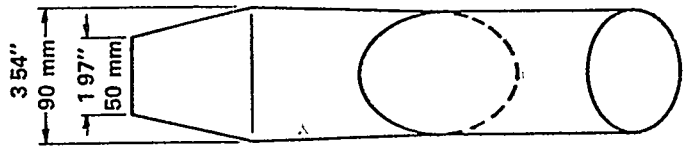


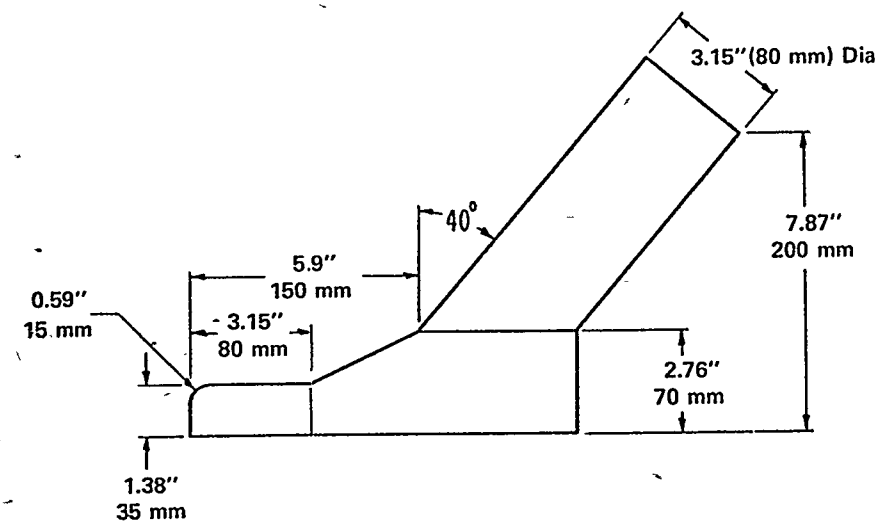


# FIGURE 2 — FOOT PROBE

(2) Any shield located totally or partly within the areas to be probed, as defined in paragraph (b)(1)(ii) of this section, shall not permanently separate, crack, or deform when the shield is subjected to a 50 lb (222 N) static tensile force, uniformly distributed over not less than half the length of the shield. The force shall be applied for at least 10 seconds in the direction which produces the maximum stress on the shield. While being tested, a shield shall be attached to the mower in the manner in which it is intended to be used. (This requirement does not apply to the housing.)

(3) During the obstruction test of paragraph (b)(2) of this section, shields shall not (i) stop the mower as a result of contact with the raised obstacle, (ii) enter the path of the blade, or (iii) cause more than one wheel at a time to be lifted from the fixture surface.

(b) *Shield tests—general*—(1) *Foot probe test.* (i) The following test conditions shall be observed:

(A) The test shall be performed on a smooth level surface.

(B) Pneumatic tires, when present, shall be inflated to the cold pressures recommended by the mower manufacturer.

(C) The mower housing shall be adjusted to its highest setting relative to the ground.

(D) The blade shall be adjusted to its lowest position relative to the blade housing.

(E) The mower shall be secured so that the mower may not move horizontally but is free to move vertically.

(ii) *Areas to be probed.* (A) The minimum area to be probed shall include any discharge opening and an area both 60 degrees to the right and 60 degrees to the left of the rear of the fore-aft centerline of the cutting width. For single-blade mowers, these angles shall be measured from a point on this fore-aft centerline which is at the center of the blade tip circle (see Fig. 3). For multi-blade mowers, these angles shall be measured from a point on the fore-aft centerline of the cutting width which is one half of the cutting width forward of the rearmost point of the composite of all the blade tip circles (See Fig. 4).

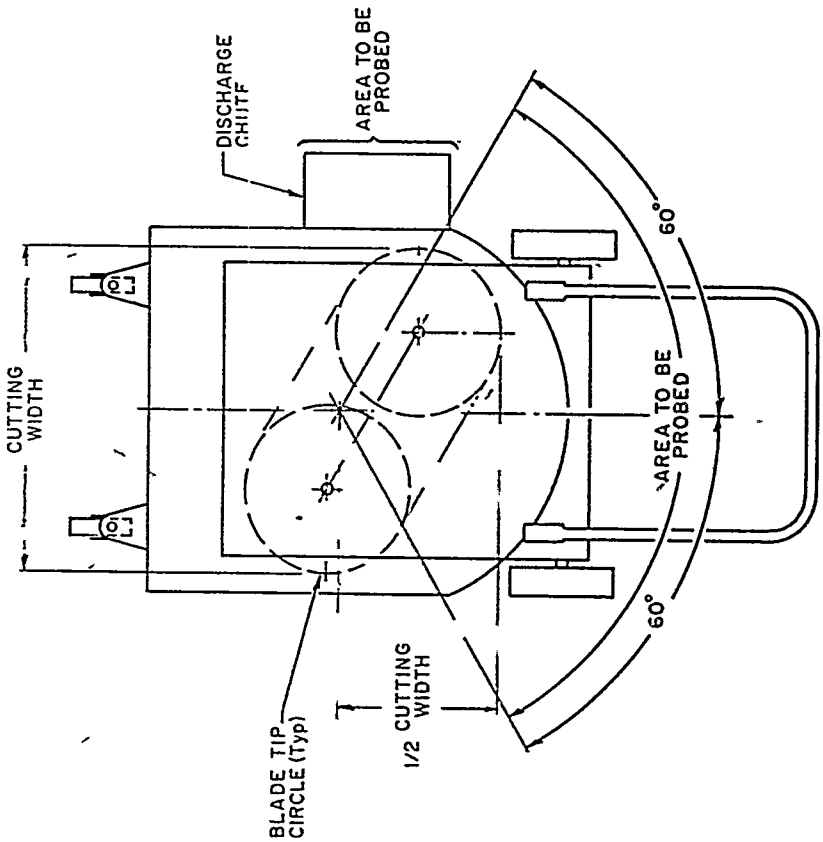


FIGURE 4 — AREA TO BE PROBED MULTI-BLADE MOWERS

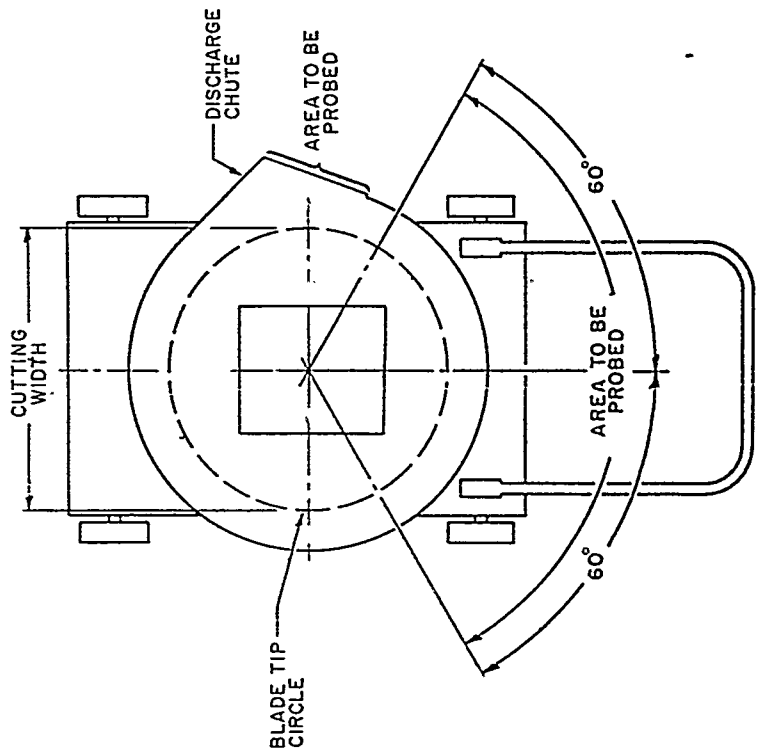


FIGURE 3 — AREA TO BE PROBED

[6355-01-C]

[6355-01-M]

(B) For a mower with a swing-over handle, the areas to be probed shall be determined as in paragraph (b)(1)(ii)(A) of this section from both possible rear positions and shall include any discharge opening. (See Fig. 5).

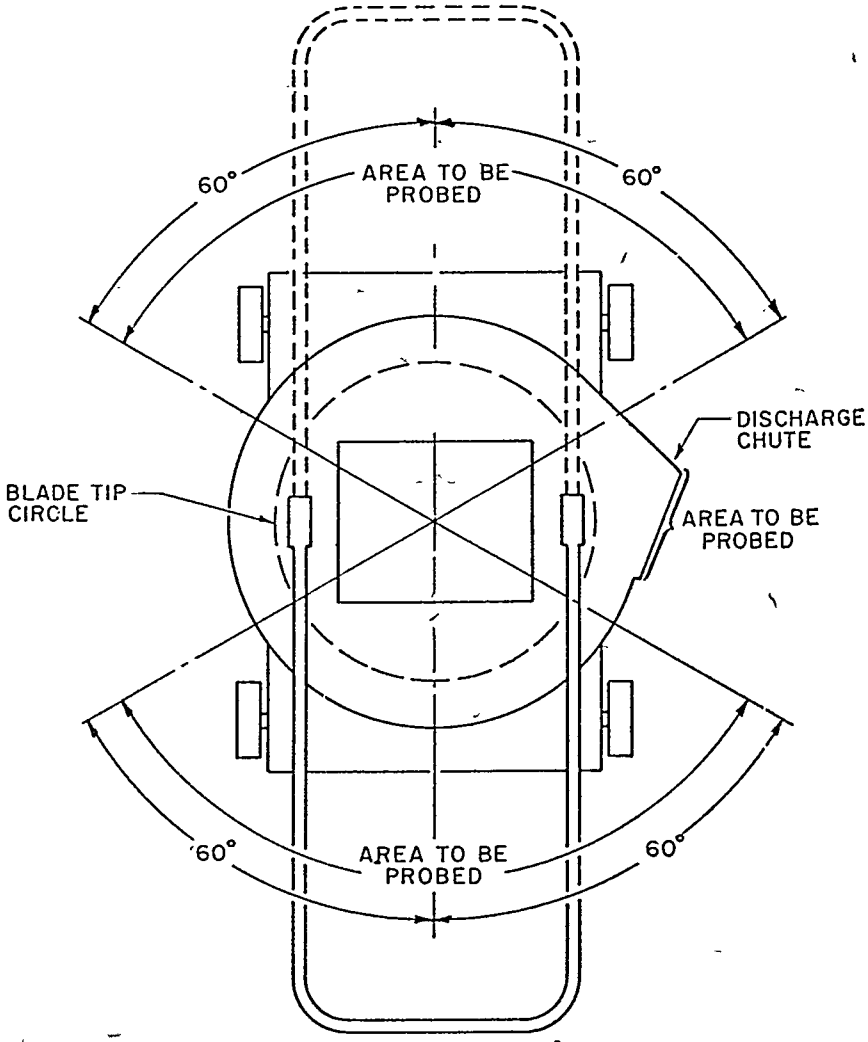


FIGURE 5 — AREA TO BE PROBED SWINGOVER HANDLE

(iii) *Procedure.* Within the areas specified in paragraph (b)(1)(ii), the foot probe of Fig. 2 shall be inserted under the bottom edge of the blade housing and shields. During each insertion, the "sole" of the probe shall be kept in contact with the supporting surface. Insertion shall stop when the mower housing lifts or the horizontal force used to insert the probe reaches 4 lb (17.8 N), whichever occurs first. As the foot probe is withdrawn after each insertion, the "toe" shall be pivoted upward around the "heel" as much as possible without lifing the mower.

(2) *Obstruction test.* (i) The following test conditions shall be observed:

(A) Pneumatic tires, when present, shall be inflated to the cold pressure recommended by the mower manufacturer.

(B) The mower housing shall be at its highest setting relative to the ground.

(ii) The test shall be performed on the fixture of Fig. 6, which consists of a level surface having (A) a 0.99 in (25 mm) deep depression with a 5.90 in (150 mm) radius of curvature and (B) a raised obstacle 0.60 in (15 mm) square, each extending the full width of the fixture. The depression shall be lined with a material having a surface equivalent to a 16- to 36-grit abrasive. The depression and the obstacle shall be located a sufficient distance apart so that the mower contacts only one at a time.

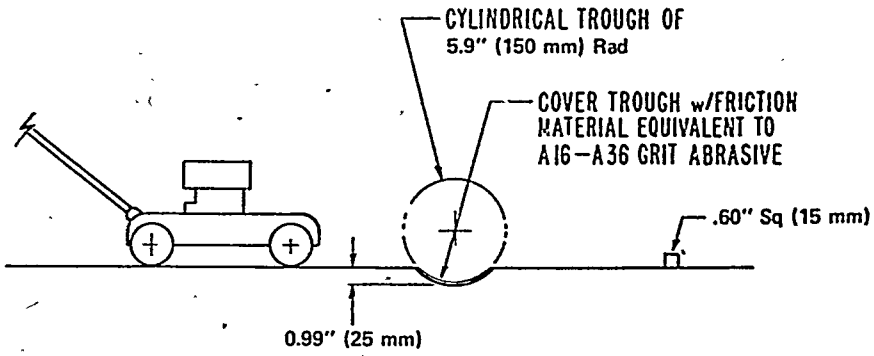


FIGURE 6—OBSTRUCTION TEST FIXTURE

(iii) The test fixture may be relieved, only to the extent necessary, to prevent interference with any blade retaining device.

(iv) The mower shall be pushed forward and pulled rearward perpendicular to and across the depression and the raised obstacle on the fixture. The mower shall be pulled and pushed, without lifting, with a horizontal force sufficient to transit the obstruction fixture at a speed not to exceed 2.2 ft/sec (0.7 m/sec).

(c) *Movable shields.*—(1) *General.* Movable shields must meet the general shield requirements of paragraph (a) of this section. In addition, movable shields which are in any of the areas to be probed defined in paragraph (b)(1)(ii) of this section and which are intended to be movable for the purpose of attaching auxiliary equipment, when deflected to their extreme open position in the manner intended by the manufacturer and released, shall either:

(i) return automatically to a position that meets the requirements of Subpart A of this Part 1205 when the attached equipment is not present, or

(ii) prevent operation of the blade(s) unless the attached equipment is present or the movable shield is returned to a position that meets the requirements of Subpart A of this Part 1205.

(2) *Tests.* (i) Automatic return of a movable shield shall be determined by manually deflecting the shield to its extreme open position, then releasing the shield and visually observing that it immediately returns to the closed position.

(ii) Prevention of operation of the blade(s) shall be determined, first by manually deflecting the shield to its extreme open position, then, following the appropriate manufacturer's instructions, completing the procedures necessary to operate the blade. Observe, using any safe method, that the blade(s) has been prevented from operating.

§ 1205.5 Walk-behind rotary power mower controls.

(a) *Blade control systems.*—(1) *Requirements for blade control.* A walk-behind rotary power mower shall have a blade control system that will perform the following functions:

(i) Prevent the blade from operating unless the operator actuates the control.

(ii) Require continuous contact with the control in order for the blade to continue to be driven.

(iii) Cause the blade motion in the normal direction of travel to come to a complete stop within 3.0 seconds after release of the control.

(iv) For a mower with an engine and with only manual starting controls, this blade control shall stop the blade without stopping the engine.

(2) All walk-behind rotary power mowers shall have, in addition to any blade control required by paragraph (a)(1) of this section, another means which must be manually actuated before a stopped blade can be restarted. This additional means may be either a control which is separate from the control required by paragraph (a)(1) of this section, or may be incorporated into the control required by paragraph (a)(1) of this section as a double-action device requiring two distinct actions to restart the blade.

(b) *Blade stopping test*—(1) *General.* Any test method that will determine the time between the release of the blade control and the complete stop of the blade motion in the normal direction of travel may be used.

(2) *Conditions.* (i) The mower shall be operated at maximum operating speed for at least 6 minutes immediately prior to the test.

(ii) The blade must be at maximum operating speed when the blade control is released.

(c) *Starting controls location.* Walk-behind mowers with blades that begin operation when the power source starts shall have their normal starting means located within the operating control zone.

§ 1205.6 Warning label for reel-type and rotary power mowers.

(a) *General.* Walk-behind power lawn mowers shall be labeled on the blade housing or, in the absence of a blade housing, on other blade shielding or on an adjacent supporting structure or assembly, with the warning label shown in Fig. 7. The label shall be at least 3.25 in (82.5 mm) high and 4 in (102 mm) wide, and the lettering and symbol shall retain the same size relation to each other and to the label as shown in Fig. 7.

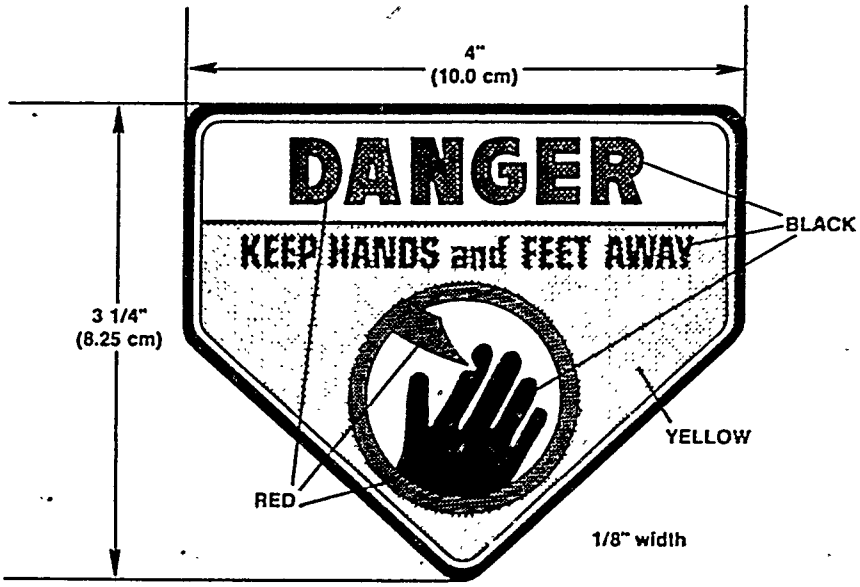


FIGURE 7

(b) *Rotary Mowers.* Walk-behind rotary mowers shall have one label as shown in Fig. 7, on the blade housing. The label shall be located as close as possible to any discharge opening, or, if there is no discharge opening, in a position that is conspicuous to an operator in the normal operating position.

(c) *Reel-type Mowers.* Walk-behind power reel-type mowers shall have one label as shown in Fig. 7, located as close to the center of the cutting width of the blade as possible. However, in the absence of a suitable mounting surface near the center of the cutting width, the label shall be placed on the nearest suitable mounting surface to the center of the cutting width.

§ 1205.7 Prohibited stockpiling.

(a) *Stockpiling.* "Stockpiling" means manufacturing or importing a product which is the subject of a consumer product safety rule between the date of issuance of the rule and its effective date at a rate that is significantly greater than the rate at which such product was produced or imported during a base period prescribed by the Consumer Product Safety Commission.

(b) *Prohibited acts.* Stockpiling of power lawn mowers that do not comply with this Subpart A of Part 1205 at a rate that exceeds by 20% the rate at which the product was produced or imported during the base period described in paragraph (c) of this section is prohibited.

(c) *Base period.* The base period for power lawn mowers is, at the option of each manufacturer or importer, any period of 365 consecutive days beginning on or after September 1, 1971, and ending on or before August 31, 1978.

§ 1205.8 Findings.

(a) *General.* In order to issue a rule such as Part 1205, the Consumer Product Safety Act requires the Commission to consider and make appropriate findings with respect to a number of topics. These findings are discussed below.

(b) *The degree and nature of the risk of injury Part 1205 is designed to eliminate or reduce.* (1) The Commission estimates that there are approximately 77,000 injuries to consumers each year caused by contact with the blades of power lawn mowers. From 1977 data, the Commission estimates that each year there are approximately 7,300 finger amputations, 2,600 toe amputations, 2,400 avulsions (the tearing of flesh or a body part), 11,450 fractures, 51,400 lacerations, and 2,300 contusions. Among the lacerations and avulsions, 35,800 were to hands and fingers and 18,000 were to toes and feet. The estimated costs caused by these injuries are $253 million, not counting any monetary damages for pain and suffering. These injuries are caused when consumers accidentally contact the blade, either inadvertently while in the vicinity of the mower, or while intentionally performing some task which they erroneously believe will not bring their hand or foot into the path of the blade.

(2) Part 1205 is expected to eliminate or reduce the severity of about 60,000 blade contact injuries per year, or 77% of all such injuries. The Commission estimates that if all mowers had been in compliance with the standard in 1977, about 6,800 finger amputations, 1,500 toe amputations, 11,000 fractures, 1,800 avulsions, 38,400 lacerations, and several hundred contusions would not have occurred. Of the lacerations and avulsions, 28,300 were finger injuries and 9,400 were toe injuries.

(c) *Consumer products subject to the rule.* The products subject to this standard are walk-behind power mowers. Power mowers with rigid or semi-rigid rotary blades are subject to all the provisions of the standard while reel-type and rotary mowers are subject to the labeling requirements. Mowers that in combination have engines of 8 hp or greater, weigh 200 lb or more, and have a cutting width of 30 in or more are excluded from the standard. The Commission estimates that at least 98% of the total annual market (by unit volume) for walk-behind mowers will be affected by the standard, and the Commission estimates that in 1978 this market was 5.4 million units.

(d) *Need of the public for the products subject to the rule.* The Commission finds that the public need for walk-behind power mowers, which provide a relatively quick and effective way to cut grass, is substantial. Riding mowers, lawn and garden tractors, hand reel mowers, trimmers and edgers, and sickle-bar mowers also provide grass-cutting services, but walk-behind power rotary mowers are by far the most commonly used devices for maintaining household lawns. There are no devices that can completely substitute for walk-behind power mowers as a group, since they have applications for which other products are not as suitable. Each type of walk-behind power mower has individual properties which meet public needs, although one type of walk-behind is often an acceptable substitute for another. The newly developed monofilament line mower is not included within the scope of the standard and could be a substitute for mowers using rigid or semi-rigid blades under some conditions.

(e) *Probable effect of the rule upon the utility of the product.* (1) The Commission finds that the probable overall effect of the standard on the utility of mowers should be to increase their utility. In the first place, consumers are likely to experience an increased sense of security from having a safer mower. A study of brake-clutch mowers conducted by the Federal Supply Service (GSA) shows that almost all users appreciated the safety features on brake-clutch mowers. In addition, by releasing the blade control and stopping the blade, the operator can then travel over gravel or other surfaces without fear of thrown objects or of the blade striking objects that might damage the mower. Brake-clutch type mowers would also give an increase in utility by virtue of enabling the operator to use the clutch to prevent stalling when the mower bogs down in heavy grass. On the other hand, there may be some minor adverse effects on utility caused by some aspects of complying mowers. For example, in very heavy mowing conditions, there may be some difficulty in engaging the blade in a blade-clutch mower. (However, mowers that are currently on the market that are not equipped with a blade clutch may have difficulty in starting the engine in heavy grass.) Complying mowers may require slightly more time and a few additional actions to operate. Since complying mowers may have more electrical and mechanical parts than current mowers, they may weigh more and require more maintenance than current mowers. No significant increase in mowing time is expected if a brake-clutch device is used to comply with the standard since each engagement of the blade would require only a few seconds. The amount of additional time and expense required for maintenance, if any, will be dependent on the design solution used. Such disutilities

are expected to be slight and to be more than balanced by the increased sense of security consumers are likely to experience from having a safer mower.

(2) During the development of the rule, questions were raised about whether changes in the shields necessitated by the foot probe requirements would adversely affect utility by causing mowers to be hard to push in grass or to be unable to mow close to walls. At the time of issuance of this rule, mowers are available that will pass a 360° foot probe and others are available that will pass rear and side foot probing without any significant loss of utility caused by shielding. Therefore, the Commission concludes that this requirement will not adversely affect the utility of mowers. Mowers with swing-over handles, however, may be more difficult to design in this regard, since 120° at each end of the mower, plus the discharge chute, are subject to the foot probe requirement. However, since mowers meeting this requirement have already been built without apparent loss of utility, the Commission concludes that shielding can be designed so that there should be no loss of utility even for mowers with swing-over handles.

(3) As required by section 9(b) of the CPSA, the Commission, in considering the issues involved in issuing a power lawn mower safety standard, has considered and taken into account the special needs of elderly and handicapped persons to determine the extent to which such persons may be adversely affected by the rule. The Commission has determined that there will be no significant adverse effect on such persons as a result of this Part 1205. In the first place, the rule can affect only those persons who are physically capable of using a power lawn mower. None of the rule's provisions will make it more difficult to operate a mower that complies with the standard. On the contrary, complying mowers should be easier to use because the need for manually restarting the mower will be less and because, if the mower uses a brake-clutch to comply with the blade control requirement, use of the brake-clutch can reduce the tendency of the engine to stall in heavy grass. Although a person's ability to hold a device such as a blade control for a long period of time will decline with age, the force required to hold the blade control can be made low enough that it will not be a problem during the length of time that it takes for consumers to mow a lawn.

(4) After considering the possible adverse effects on mowers that could be caused by the standard and balancing them against the increase in utility that is expected, the Commission concludes that, for a typical consumer, the increases in utility should more than offset any decreases.

(f) *Probable effect of the rule upon the cost of the product.* The Commission estimates that the retail price impact of the standard will be about $35 for the average walk-behind mower. Based on an average useful mower-life of about 8 years, the additional annual cost to the purchaser is expected to average about $4.40. The probable effect of the standard will differ on the various types of mowers within its scope. Percentage increases in price will vary from about a 7 percent increase for power-restart self-propelled mowers to about a 30 percent increase for gasoline-powered manual start push mowers. The costs attributable to individual requirements of the standard are discussed in paragraph (i) of this section.

(g) *Probable effect of the rule upon the availability of the product.* (1) The Commission finds that the standard is not expected to have a significant impact on the availability of walk-behind rotary mowers, since domestic production capacity appears to be sufficient to handle any increased demand for safety-related components or materials. Although adapting some types of power mowers to the standard may be more costly than others, the effects of the standard on the price or utility of a particular category of power mowers are not expected to cause radical shifts in demand among types of mowers. The Commission finds that all types of power mowers subject to the standard will be available, although some, such as house-current-powered mowers, may increase their market shares becauses they can be brought into compliance with the standard at a lesser cost.

(2) Because some manufacturers may not revise their entire product line before the effective date of the standard, individual mower manufacturers may initially have less varied lines than at present, but there should be no decrease in the overall types and features of mowers available to consumers.

(h) *Alternative methods.* (1) The Commission has considered other means of achieving the objective of the standard. For example, alternatives were considered such as hand probes, "blade harmless" tests, and blade control by engine kill but allowing manual restart. These alternatives have been rejected by the Commission as being either unfeasible or not as effective as the rule which is being issued.

(2) Similarly, the Commission has found no alternative means of achieving the objective of the standard that it believes would have fewer adverse effects on competition or that would cause less disruption or dislocation of manufacturing and other commercial practices, consistent with the public health and safety.

(i) *Unreasonable risk of injury.* (1) The determination of whether a consumer product safety rule is reasonably necessary to reduce an unreasonable risk of injury involves a balancing of the degree and nature of risk of injury addressed by the rule against the probable effect of the rule on the utility, cost, or availability of the product. The factors of utility and availability of the products, adverse effects on competition, and disruption or dislocation of manufacturing and other commercial practices have been discussed above. The following discussion concerns the relationship of anticipated injury reduction and costs for various requirements of the standard. (See the report, *Economic Impact of Blade Contact Requirements for Power Mowers,* January 1979, for a detailed analysis of the possible effects of discounting and inflation on the computation of the quantifiable benefits associated with this regulation.)

(2) The foot probe and related requirements are expected to reduce the number of blade contact injuries to the foot by 13,000 each year. It is not possible to apportion this injury reduction among the respective requirements. The cost of these requirements is estimated to be about $4.00 per mower, mostly for redesign of the shields. The shield strength requirement is similar to a requirement in the existing voluntary standard that is almost universally complied with, and should comprise only a small portion of the $4.00 retail cost increase compared to pre-standard mowers that is attributable to this related group of requirements. Also, shields complying with the movable shield requirement are featured in some currently produced mowers.

(3) The foot probe and related requirements should result in a cost increase of about $22,000,000 and undiscounted injury savings of about $46,000,000, exclusive of any allowance for pain and suffering.

(4) The starting location control requirement would apply only to mowers with a power restart capability using engine kill to stop the blade. The cost for relocating the power restart switch, if necessary, should be very minor, and more than offset by the elimination of a clutch, as discussed below.

(5) The requirement that the blade stop within 3 seconds of the release of the blade control is supported by (i) the requirement that those mowers that stop the blade by stopping the engine must have a power restart (to remove the motivation to disable the blade control because of the inconven-

ience of manually starting the mower each time the control is released) and by (ii) the requirement for an additional control that must be actuated before the blade can resume operation (to prevent accidental starting of the blade). Together, these requirements are expected to reduce the number of blade contact injuries by 46,500 per year for an undiscounted savings in injury costs of about $165,000,000 per year, exclusive of pain and suffering.

(6) Virtually all mowers will be subjected to a cost increase of about $3 for the blade control actuating means and $1 for the second control required to restart the blade. (The $1 cost could be eliminated for power restart-engine kill mowers that do not start when the blade control is actuated.)

(7) Also, most mowers would require a brake for the blade in order to achieve a 3 second stop time. This would add another $6.50-$8.50, depending on the type of mower. Mowers with power restart capability could stop the blade by killing the engine and thus would not need to provide a clutch to disconnect the engine from the blade. Mowers using manual restart would have to provide a clutch or other blade disengagement devices, which would probably be combined with the brake in a unitary brake-clutch mechanism.

(8) The following are the Commission's estimates of the probable retail price increases associated with certain types of currently produced mowers that will be caused by the blade control requirements.

| Type of mower | Blade control retail Price increases |
|---|---|
| Electric mowers (house current or battery powered) | $15.00 |
| Present Electric start gasoline mowers | 13.00-19.50 |
| Present Manual start gasoline mowers brake clutch approach | 32.50 |
| Power restart approach | 29.00-39.50 |

(9) The weighted average retail price increase of the blade stop requirements is expected to be about $31 per mower for a total retail cost increase of $167,000,000.

(10) The foot probe and blade stop requirements of the standard will obviously not completely protect the users of mowers under all circumstances. It is still essential for consumers to be aware of the hazard of blade contact and take the proper precautions to protect themselves. It is especially important that users not become complacent with the knowledge that the mower incorporates blade contact safety requirements. Accordingly, the Commission has determined that it is desirable that mowers complying with the standard bear a label warning of the danger of blade contact. Such a requirement would result in practically no effect on on the retail price of mowers since labels are very inexpensive and practically all currently produced mowers bear some type of warning label. In view of the hazard that will be associated with power mowers even after the effective date of the standard, and the low cost of the label, the Commission concludes there is an unreasonable risk of injury that can be addressed by the label requirements in this Part 1205.

(11) Labeling requirements under the CPSA may be issued under the authority of either section 7 of the act or section 27(e), or both, Under section 7, the Commission must find that the label is reasonably necessary to prevent or reduce an unreasonable risk of injury. Under section 27(e), the Commission must determine that the label conveys performance and technical data required to carry out the purposes of the act, one of which is "to protect the public against unreasonable risks of injury associated with consumer products." The Commission concludes it has authority to issue the labeling requirement of Part 1205 under both section 7 and 27(e) and finds that issuance of the requirement is necessary to convey the performance and technical data concerning the blade contact hazard, in accordance with section 27(e), for the purpose of the act mentioned above.

(j) *Conclusion.* Therefore, after considering the anticipated costs and benefits of Part 1205 and the other factors discussed above, and having taken into account the special needs of elderly and handicapped persons to determine the extent to which such persons may be adversely affected by the rule, the Commission finds that Part 1205 (including the effective dates) is reasonably necessary to eliminate or reduce the unreasonable risk of injury associated with walk-behind power lawn mowers and that promulgation of the rule is in the public interest.

Dated: February 12, 1979.

SADYE E. DUNN,
*Secretary, Consumer Product Safety Commission.*

[FR Doc. 79-4994 Filed 2-14-79; 8:45 am]

[6355-01-M]

## CONSUMER PRODUCT SAFETY COMMISSION

[16 CFR Part 1205]

### SAFETY STANDARD FOR WALK-BEHIND POWER LAWN MOWERS

Proposed Certification Rule

AGENCY: Consumer Product Safety Commission.

ACTION: Proposed rule.

SUMMARY: In this document, the Commission proposes regulations that manufacturers, private labelers, and importers must follow to certify that their walk-behind rotary power lawn mowers comply with the Commission's Safety Standard for Walk-Behind Power Lawn Mowers. The proposal contains requirements for certifying rotary power mowers with a permanent label and for recordkeeping. The labeling and recordkeeping requirements are needed to help the Commission monitor compliance with the lawn mower safety standard. The labeling requirement will also enable consumers to distinguish complying from noncomplying mowers.

DATES: The Commission proposes that the rule be applicable to all walk-behind rotary power lawn mowers manufactured after December 31, 1981.

Written comments on the proposed rule, preferably in 5 copies, should be submitted to the Commission by April 16, 1979.

ADDRESS: Written comments should be submitted to the Office of the Secretary, Consumer Product Safety Commission, 1111 18th Street, NW., Third Floor, Washington, D.C. 20207. All comments received and other information relating to this proceeding may be viewed in the Office of Secretary.

FOR FURTHER INFORMATION CONTACT:

Allen Brauninger, Directorate for Compliance and Enforcement, Consumer Product Safety Commission, Washington, D.C. 20207, 301-492-6629.

SUPPLEMENTARY INFORMATION:

#### BACKGROUND

Elsewhere in this Part of the FEDERAL REGISTER, the Commission has published a final consumer product safety standard for power operated walk-behind rotary and reel-type lawn mowers. (16 CFR Part 1205 Subpart A). The standard contains performance and labeling requirements intended to reduce the risk of injury to consumers caused by contact, primarily of the foot and hand, with the rotating blade of a mower. The performance requirements of the standard apply only to rotary mowers. The labeling requirements apply to both rotary and reel-type mowers. The standard contains two main performance requirements applicable to rotary power lawn mowers. The first is designed to protect against foot contact injuries that occur while the operator is in the normal mowing position. This requirement states that the rear and discharge chute areas of the mower shall be capable of being probed with a specified foot probe that simulates the action of a human foot, without the probe contacting the blade. The second main requirement is intended to protect against hand or foot injuries that occur after the operator has left the normal mowing position. This protection is provided by requiring the blade to stop within 3 seconds of the time the operator lets go of the mower. A more detailed explanation of the standard's requirements, rationale, and background is given in the preamble to the final power lawn mower safety standard.

The Commission is proposing to issue this certification and recordkeeping regulation to inform manufacturers, private labelers, and importers of the procedures to use in certifying that their products comply with the safety standard once the standard becomes effective. The certification proposal applies to walk-behind rotary power lawn mowers and not to reel-type mowers, since the latter are subject only to the labeling requirements of the standard. Under the proposed certification rule, manufacturers, private labelers, and importers are responsible for (1) issuing a certificate of compliance in the form of a permanent label attached to each mower which states that the mower complies with the standard and supplies other specified information, and (2) keeping or assuring the availability of records which demonstrate that the certificates are based on a test of each mower or on a reasonable testing program. These requirements are discussed in detail below.

#### PROPOSED CERTIFICATION RULE

##### 1. CERTIFICATION TESTING

Section 14(a)(1) of the Consumer Product Safety Act (CPSA) (15 U.S.C. 2063(a)(1)) requires manufacturers (defined in the act to include importers) and private labelers of a product subject to a consumer product safety standard to issue a certificate which states that the product conforms to all applicable consumer product safety standards, specifies the applicable standard, states the name of the manufacturer or private labeler issuing the certificate, and includes the date and place of manufacture. The certificate must accompany the product or be furnished to any distributor or retailer to whom the product is delivered. Section 14(a) also requires that the certificate be based on a test of each product or upon a reasonable testing program.

The certification rule proposed below provides that manufacturers (defined at § 1205.32(a) to include importers and assemblers) and private labelers must either test individual rotary walk-behind power lawn mowers or devise "reasonable testing programs." A "reasonable testing program" is defined in the proposal as one which demonstrates that the mowers comply with the standard. The proposal allows manufacturers, private labelers, and importers to define their own reasonable testing programs.

Prior to issuance of this proposal, the Commission concluded that it was unnecessary for it to specify the testing program for the manufacturers. The Commission notes that the power lawn mower's ability to meet the performance requirements (except for blade stopping time) is controlled by the mower's design, materials, and method of production. Initial tests made on mowers of a specific design should be sufficient to determine that the product manufactured at a later date to essentially the same design complies with the standard. Because blade stopping time may vary from one mower to another of essentially the same design, the Commission believes that a prudent manufacturer would test production mowers of essentially the same design periodically for the blade stopping time requirement.

The proposed certification rule states at § 1205.33(b)(2) that the Commission will test for compliance with the standards by using the test procedures set forth in Subpart A of Part 1205 (published elsewhere in this Part of the FEDERAL REGISTER). (Within a year, the Commission will develop a compliance test manual which will describe in detail the procedures the Commission will follow in testing mowers for compliance. The compliance test manual will be available to all interested persons upon request.) The proposed rule emphasizes, however, that manufacturers are free to use *any* reasonable test procedures. Manufacturers may wish to perform more stringent tests than those described in the standard to ensure that their mowers will meet any Commission tests. (For example, the shield strength test provided for in the standard at § 1205.4 requires the application of 50 lb of force. Manufacturers may wish to apply higher force levels.)

This proposed rule explains at § 1205.33(b)(1) how a reasonable testing program is conducted. For certification testing, the mowers should be grouped into "production lots," defined at § 1205.32(b) to be a quantity of mowers from which certain mowers are selected for testing prior to certifying the lot. All mowers in a production lot are required to be essentially identical in those design, construction, and material features which relate to the ability of a mower to comply with the standard. Sample mowers are then selected from the production lot for testing in accordance with the reasonable testing program.

If the production lot has been properly limited as to number and design of mowers, it should be possible for a manufacturer to test samples from the lot for certification and not to test again as long as the production lot mowers are identical to the mowers tested for certification in all respects relating to the ability of the mower to meet the requirements of the standard. After a lot has been established, if there are any changes in lot specifications which would affect mower performance in relation to the requirements of the standard, the manufacturer should establish a new production lot for testing. In the event of changes in parts, suppliers of parts, or production methods which would affect the ability of the mower to comply with the standard, the manufacturer should establish a new production lot for testing. Furthermore, if the reasonable testing program shows that a mower does not comply with any requirement of the standard, no mower in the production lot can be certified as complying until the mowers have been altered by repair, redesign, or use of a different material or components to the extent necessary to bring them into conformance with the standard.

2. RECORDKEEPING

Proposed § 1205.34 requires that manufacturers, private labelers, and importers of walk-behind rotary power lawn mowers subject to the standard maintain or take responsibility for written records demonstrating that compliance certificates are based on tests of each mower or a reasonable testing program.

No specific format is prescribed for the records, but the records are required to contain sufficient information to enable a Commission investigator to determine the nature of a firm's testing procedures, including the nature of the production lot chosen, and to determine whether the mowers which are being marketed and certified to comply with the standard are identical (in every respect that relates to compliance with the standard) to the mowers that were tested for conformance. The records are also required to indicate exactly which mowers or production lots of mowers are covered by particular certificates. The records are required to be maintained for a minimum of 3 years from the date of certification of each mower or each production lot. This is because the Commission staff estimates that some mowers can reasonably be expected to remain in inventory and not reach consumers for a period of three years, and Commission enforcement personnel are particularly interested in being able to check the records concerning any mowers held in inventory. The Commission would like to receive comment on the appropriateness of this 3 year period and any other time periods commenters believe would be reasonable and proper for maintenance of records.

These records, besides aiding Commission enforcement of the standard and the certification rule, could be helpful to a manufacturer in limiting the scope of a possible recall order under section 15 of the CPSA. (The Commission is authorized under section 15 to order a manufacturer of a product which is found, after a hearing, to present a "substantial product hazard" to elect one of the following remedies: repair the defective product, replace the product with a non-defective product, or refund the purchase price of the product. "Substantial product hazard" is defined in section 15 to mean a failure to comply with an applicable consumer product safety rule or a product defect, which creates a substantial risk of injury to the public.) Records of dates and locations of production of various models; dates of changes in specifications, parts, suppliers, or manufacturing procedures; and the dates and results of quality control or recertification testing are examples of the types of information which could serve to identify the period of time during which non-complying or defective mowers were manufactured. In the absence of such information, the entire production of a particular type of mower could be subject to a recall order.

The Commission is authorized under section 16(b) of the CPSA to require the establishment and maintenance of records that are necessary to implement the act or to determine compliance with regulations issued under the Act. Section 16(b) further provides that the records must be made available for inspection by duly designated agents of the Commission upon request. The Commission believes the records required to be maintained by proposed § 1205.34 are necessary to monitor compliance with the power lawn mower standard. In accordance with section 16(b), these records are required under the proposed rule to be available to officers or employees of the Commission upon request.

The Commission is particularly interested in receiving comment on whether the records required to be maintained by proposed § 1205.34 are the type of records manufacturers would normally keep to support certificates of compliance, even if the records were not specifically required. The Commission is also interested in whether the information required for the records under proposed § 1205.34 could easily be incorporated into other records manufacturers normally keep.

3. PRODUCT CERTIFICATION AND LABELING

Proposed § 1205.35 of the regulations published below requires manufacturers of walk-behind rotary power lawn mowers manufactured after the effective date of the lawn mower standard to affix permanent labels to mowers which shall be considered a "certificates" of compliance, as that term is used in section 14(a) of the CPSA.

(NOTE: Section 14(c) authorizes the Commission to issue rules requiring a product to bear a label containing information similar to that required by section 14(a) for certificates).

The certification label is required to include the following information:

1. The statement "Meets CPSC blade safety requirements for walk-behind rotary power mowers."
2. An identification of the production lot.
3. The name of the manufacturer or private labeler issuing the certification label.
4. The location where the product was principally assembled.
5. The month and year the product was completed and in the form intended to be supplied to the consumer, except where the production lot is based on a period of less than one month, in which case a more specific date relating to the production lot is required.

All of this information, except for the statement and the name of the person issuing the certificate, may be in code if an interpretation of the coding system is available to consumers, persons in the chain of distribution, and the Commission.

The certification label is required to be visible and legible to the ultimate consumer. However, where the permanent label is not immediately visible to the consumer at the time of sale because of packaging or other marketing practices, a second temporary label stating "Meets CPSC blade safety requirements for walk-behind rotary power mowers" is required on the container or promotional material used with the sale of the mowers.

In deciding that certification for lawn mowers should be in the form of

a permanent label rather than a separate certificate supplied to persons in the distribution chain, the Commission points out that the label will be visible to all in the distribution chain, and the certification will be immediately available if any questions concerning compliance with the standard arise about a particular mower. The Commission believes that a permanent label will benefit consumers and industry, as well as the Commission, in the following ways:

1. For a period of time after the mower standard goes into effect, both complying and noncomplying mowers will be available on the retail market. A label affixed to the individual mower, in contrast to a certificate covering a group of mowers supplied to the retailer, will help consumers purchasing mowers to make an informed choice between complying and noncomplying mowers.

2. A permanent label will make it easier to determine whether a particular mower was certified to comply with the standard. In the event a power mower is involved in an injury, for example, a CPSC investigator or the victim of the injury can tell immediately if the mower was certified.

3. The Commission may amend the walk-behind power mower standard in the future to add new requirements or to modify the existing requirements. A label stating the date of manufacture will make it immediately apparent which requirements apply to a particular mower, thereby aiding Commission investigation of particular mower-related accidents.

4. A permanent label will enable CPSC investigators screening mowers for compliance to distinguish between mowers manufactured before and those manufactured after the standard without examining retailers' or distributors' shipping records. Such an examination can be time-consuming and difficult. The label will also permit Commission investigators to readily identify the firm responsible for the certification and the place of manufacture, thereby expediting compliance follow-up.

5. A permanent label with an identification of the production lot and the date and location of manufacture will be advantageous to manufacturers, distributors, retailers, and consumers in the event of a recall order under section 15 of the CPSA. If the recall is limited to a certain production period or manufacturing location, the label will help in identifying and limiting those mowers which are subject to the recall.

The last two sections of the proposal deal with certification labeling by private labelers and importers. Proposed § 1205.36 provides that when a private labeler distributes a rotary walk-behind power lawn mower subject to the standard, under the private labeler's name, the private labeler must issue the certificate of compliance but may rely on the manufacturer's tests to support the certification label. However, the private labeler has the responsibility for assuring that the tests used to support the certification (even though performed by the manufacturer) are proper and that the records of the tests being held by the manufacturer are accurate and complete.

Proposed § 1205.37 contains similar provisions for importers of mowers. The importers are required to issue the certification labels, but may rely on the foreign manufacturer's tests to support the certification if the records of the tests are maintained in the United States and the importer is a resident of the U.S. or has a resident agent in the U.S. The records must be maintained in the U.S. and the importer must reside, or maintain a resident agent, in this country to enable the Commission investigators to inspect the records and monitor compliance with the standard. Like private labelers, importers who certify are responsible for assuring that all testing has been performed properly with acceptable results and that the records of the tests are accurate and complete.

Under proposed § 1205.36, if there is more than one party otherwise subject to the requirements of the proposed rule for a given mower, only the party closest to the consumer in the distribution chain need issue a certificate.

There are three issues involving the certification label on which the Commission is particularly interested in receiving comment. The first is the wording of the certification statement, which has been phrased to indicate that only walk-behind rotary power lawn mowers are subject to the performance requirements of the lawn mower standard. This is so that consumers will not be inclined to think that mowers outside the scope of the performance standard (i.e., reel-type or riding mowers) are noncomplying. The Commission would appreciate any suggestions from commenters for alternate wordings which would adequately inform consumers of the certification and would also help to reduce confusion concerning the coverage of the standard.

The second issue concerns the fact that the Commission is proposing this Part 1205 to require two labels on lawn mowers—the certification label required by this Subpart B and the warning label on the blade housing required by the standard. While the two labels serve entirely different purposes, the Commission would appreciate comment on the issue of whether it might be appropriate to permit persons or firms issuing certification labels to append the information needed for those labels to the warning label required by the standard. The Commission is considering permitting this as an alternative to two separate labels, but is concerned that the certification information be presented in such a way so as not to detract from the safety message of the warning label.

The third issue is whether distributors and retailers would prefer to be provided with a separate certificate for lawn mowers they receive, in addition to the label on the mower. Distributors and retailers can retain a separate certificate after they have sold the certified products and can produce the certificate as a possibe defense in an enforcement action for violation of the standard (15 U.S.C. 2068(b)). Without a separate certificate, distributors and retailers might want to maintain their own records indicating that the products they received and sold were labeled as complying. The Commission is considering requiring the issuance of separate certificates, in addition to the certification labels, and is interested in receiving comments on this issue.

### Anticipated Impact of the Proposed Certification Rule

The Commission believes that the retail price impact of the labeling and recordkeeping requirements of the proposed certification rule will be approximately a $0.50 increase per mower subject to the proposed rule. The Commission notes that the proposed rule mandates a label, and recordkeeping, but allows manufacturers a great deal of flexibility as to testing and recordkeeping.

Commission points out that while the labeling specified in the proposed rule will require more information on lawn mowers than is currently provided on lawn mower housings, most manufacturers already have the voluntary standard seal, the model number, and a serial number on the mower housing. Considering the amount of time until the certification rule is proposed to become effective, it should be relatively easy and inexpensive for manufacturers, importers, or private labelers to incorporate complying labels on mowers.

Furthermore, certification recordkeeping expenses should not be significant, especially for firms with relatively large production runs. Substantial recordkeeping is already done in connection with the voluntary standard and manufacturers' normal quality control procedures. Since the certification rule allows manufacturers a great deal of latitude in the format of their recordkeeping, manufacturers should be able to incorporate certification recordkeeping into their present sys-

tems with little difficulty. There may be one-time-only costs associated with changing labels, forms, and possibly computer programs for those firms with such programs to accommodate certification information, but these costs should make only a miniscule contribution to increases in the price of mowers.

Based on this information, the Commission concludes that the costs of the proposed certification rule will not be significant.

ENVIRONMENTAL CONSIDERATIONS

The Commission's interim rules for carrying out its responsibilities under the National Environmental Policy Act (see 16 CFR Part 1021; 42 FR 25494) provide that product certification or labeling rules normally have no potential for affecting the environment and environmental review of such rules is, therefore, generally not required. (Section 1021.5(b)(2)).

With respect to this lawn mower certification rule, the Commission finds that the proposed rule will have no significant effect on the human environment and that no environmental review of the proposal is necessary.

PROPOSED EFFECTIVE DATE

In § 1205.31 as published below, it is proposed that the certification rule be applicable to walk-behind rotary power lawn mowers manufactured After December 31, 1981. This date corresponds to the effective date for the performance requirements of the lawn mower standard (see Part 1205, Subpart A).

CONCLUSION AND PROPOSAL

Having considered the need for and the economic impact of the certification requirements set forth below, the Commission concludes that the proposed requirements are reasonable and not unduly burdensome in light of the need for the rule. Therefore, pursuant to sections 14, 16, and 27(e) of the CPSA (15 U.S.C. 2063, 2065, and 2076), the Commission proposes to amend Title 16, Chapter II, Subchapter B, by adding a new Subpart B to Part 1205, reading as follows:

## PART 1205—SAFETY STANDARD FOR WALK-BEHIND LAWN MOWERS

### Subpart B—Certification Rule

Sec.

1205.30 Purpose, scope and application.
1205.31 Effective date.
1205.32 Definitions.
1205.33 Certification testing.
1205.34 Recordkeeping requirements.
1205.35 Product certification and labeling by manufacturers.
1205.36 Product certification and labeling by private labelers.
1205.37 Product certification and labeling by importers.
1205.38 Certification responsibility; multiple parties

AUTHORITY: Secs. 14, 16, 27(e); 86 Stat. 1220, 1222, 1228; (15 U.S.C. 2063, 2065, 2076).

### Subpart B—Certification Rule

§ 1205.30 Purpose, scope and application.

(a) *Purpose.* Section 14(a) of the Consumer Product Safety Act ("Act"), 15 U.S.C. 2063(a), requires every manufacturer (including importer) and private labeler of a product which is subject to a consumer product safety standard to issue a certificate that the product conforms to the applicable standard, and to base that certificate either on a test of each product or on a "reasonable testing program." The purpose of this Subpart B of Part 1205 is to establish requirements that manufacturers, importers, and private labelers of walk-behind rotary power lawn mowers subject to the Safety Standard for Walk-Behind Power Lawn Mowers (16 CFR Part 1205, Subpart A), shall issue certificates of compliance in the form of specified labeling and shall keep records of the testing program on which the certificates are based.

(b) *Scope and application.* The provisions of this rule apply to all rotary walk-behind power lawn mowers which are subject to the requirements of the Safety Standard for Walk-Behind Power Lawn Mowers. This rule does not apply to reel-type mowers, which are subject only to the labeling requirements of the standard.

§ 1205.31 Effective date.

Any walk-behind rotary power mower manufactured after December 31, 1981 must meet the standard and must be certified as complying with the standard, in accordance with this rule.

§ 1205.32 Definitions.

In addition to the definitions set forth in section 3 of the act (15 U.S.C. 2052) and in § 1205.3 of the standard, the following definitions shall reply to this Subpart B of this Part 1205:

(a) "Manufacturer" means any person or firm that manufactures or imports power lawn mowers subject to this standard, and includes those that assemble power lawn mowers from parts manufactured by other firms.

(b) "Private labeler" means an owner of a brand or trademark which is used on the label of a power lawn mower subject to the standard which bears a private label as defined in section 3(a)(7) of the act (15 U.S.C. 2052(a)(7)).

(c) "Production lot" means a quantity of mowers from which certain mowers are selected for testing prior to certifying the lot. All mowers in a lot must be essentially identical in those design, construction, and material features which relate to the ability of a mower to comply with the standard.

(d) "Reasonable testing program" means any test or series of tests which are identical or equivalent to, or more stringent than the tests defined in the standard and which are performed on one or more mowers of the production lot for the purpose of determining whether the mowers of that lot comply with the requirements of the standard.

§ 1205.33 Certification testing.

(a) *General.* Manufacturers, importers, and private labelers shall either test individual rotary walk-behind power lawn mowers or shall rely upon a reasonable testing program to demonstrate compliance with the requirements of the standard.

(b) *Reasonable testing program.* A reasonable testing program for rotary walk-behind power mowers is one that demonstrates that the mowers comply with the standard. Manufacturers, importers, and private labelers may define their own reasonable testing programs.

(1) To conduct a reasonable testing program, the mowers shall be divided into production lots. Sample mowers from each production lot shall be tested in accordance with the reasonable testing program. Production lots shall be limited as to the number and design of mowers to ensure that if the mowers selected for testing meet the standard, all mowers in the lot will meet the standard. Where there is a change in parts, suppliers of parts, or production methods that could affect the ability of the mower to comply with the requirements of the standard, the manufacturer should establish a new production lot for testing.

(2) The Commission will test for compliance with the standard by using the test procedures contained in the standard. However, a reasonable testing program may include either tests prescribed in the standard or any other reasonable test procedures. (For example, in the shield strength test (§ 1205.4), the manufacturer, importer, or private labeler might choose to use a force higher than the 50 lb. force specified in the standard.)

(3) If the reasonable testing program shows that a mower does not comply with one or more requirements of the standard, no mower in the production lot can be certified as complying until mowers in the lot have been altered by repair, redesign, or use of a different material or components to the extent necessary to bring them into conformance with the standard. Mowers that do not comply with the standard cannot be sold or offered for sale.

§ 1205.34 Recordkeeping requirements.

(a) *General.* Every person issuing certificates of compliance for walk-behind rotary power lawn mowers subject to the standard shall maintain written records which show that the certificates are based on a test of each mower or on a reasonable testing program. The records shall be maintained for a period of at least 3 years from the date of certification of each mower or each production lot. These records shall be available to any designated officer or employee of the Commission upon request in accordance with section 16(b) of the act (15 U.S.C. 2065(b)).

(b) *Content of records.* Records shall describe the tests the mowers have been subjected to, the results of the tests, and, if applicable, shall explain what production lot has been chosen as the basis for the reasonable testing program. The records shall also indicate exactly which mowers or production lots of mowers are covered by particular certificates of compliance.

(c) *Format for records.* The records required to be maintained by this section may be in any appropriate form or format that clearly provides the information this section requires.

§ 1205.35 Product certification and labeling by manufacturers.

(a) *Form of permanent label of certification.* Manufacturers shall issue certificates of compliance for walk-behind rotary power lawn mowers manufactured after the effective date of the mower standard in the form of a label which can reasonably be expected to remain affixed to the mower during the period the mower is capable of being used. Such labeling shall be deemed to be a "certificate" of compliance as that term is used in section 14 of the act. (15 U.S.C. 2063).

(b) *Contents of certification label.* The certification labels required by this section shall clearly and legibly set forth the following information:

(1) The statement "Meets CPSC blade safety requirements for walk-behind rotary power mowers."

(2) An identification of the production lot.

(3) The name of the person or firm issuing the certificate. (See §§ 1205.36 and 1205.37, below).

(4) The location where the product was principally assembled.

(5) The month and year the product was manufactured or if the production lot is based on a period of less than one month, then a more specific date which relates to the production lot. (If this information has been included on the label under paragraph (b)(2) of this section, it need not be repeated).

(c) *Coding.* Except for the requirements of paragraphs (b)(1) and (b)(3) of this section, all of the information required by § 1205.35 may be in code, provided the person or firm issuing the certificate maintains a written record of the meaning of each symbol used in the code that can be made available to the distributor, retailer, consumer, and the Commission upon request.

(d) *Placement of label.* The label required by this section must be visible and legible to the ultimate purchaser of the lawn mower prior to purchase. Where the label in not visible to the consumer at the time of sale because of packaging or marketing practices, an additional or temporary label or notice stating "Meets CPSC blade safety requirements for walk-behind rotary power mowers" shall also appear on the container and promotional material used in connection with the sale of the mowers.

§ 1205.36 Product certification and labeling by private labelers.

(a) *General.* A private labeler who distributes a rotary walk-behind power lawn mower subject to the standard which is manufactured by another person or firm but which is sold under the private labeler's brand or trademark must issue the certificate of compliance required by section 14 of the Consumer Product Safety Act and § 1205.35 of this regulation. If the testing or reasonable testing program required by this Subpart B of this Part 1205 has been performed by or for the manufacturer of the product, the private labeler may rely on any such tests to support the certificate of compliance provided the private labeler assumes responsibility for the integrity of the manufacturer's records in accordance with paragraph (b) of this section.

(b) *Responsibility of private labeler.* The private labeler bears responsibility for assuring that all testing required to support the certificate of compliance has been performed properly with passing or acceptable results, and that all records of such tests are accurate and complete.

§ 1205.37 Product certification and labeling by importers.

(a) *General.* The importer of any rotary walk-behind power lawn mower subject to the standard must issue the certificate of compliance required by section 14(a) of the Act and § 1205.35 of this regulation. If the testing or reasonable testing program required by this Subpart B of Part 1205 has been performed by or for the overseas manufacturer of the product, the importer may rely on any such tests to support the certificate of compliance if the importer is a resident of the United States or has a resident agent in the U.S. and the records are maintained in the United States in accordance with § 1205.34 above.

(b) *Responsibility of importer.* The importer bears responsibility for assuring that all testing required to support the certificate of compliance has been performed properly with passing or acceptable results, and that all records of such tests are accurate and complete.

§ 1205.38 Certification responsibility; multiple parties.

If there is more than one party otherwise subject to the requirements of this Subpart B of Part 1205 for a given mower, only the party closest to the consumer in the distribution chain need issue a certificate.

Interested persons are invited to submit written comments regarding these regulations on or before April 16, 1979.

Comments received after this date will be considered to the extent practicable. Such comments should be accompanied, to the extent possible, by supporting data or documentation. Requests for confidentiality of documentation will be handled in accordance with the Freedom of Information Act, as amended, 5 U.S.C. 552; the Commission's interim regulations issued under that act (16 CFR Part 1015); and the provisions of section 6(a)(2) of the Consumer Product Safety Act (15 U.S.C. 2055(a)(2)).

Written comments and any accompanying materials should be submitted preferably in five copies, to the Secretary, Consumer Product Safety Commission, Washington, D.C. 20207. Comments received in response to this proposal will be available for public inspection in the Office of the Secretary 3d Floor, 1111 18th Street, NW., Washington, D.C. during working hours, Monday through Friday.

Dated: February 12, 1979.

SADYE E. DUNN,
*Secretary, Consumer Product Safety Commission.*

[FR Doc. 79-4995 Filed 2-14-79; 8:45 am]