11-28-80
Vol. 45 No. 231
Pages 78995-79406

federal register

Friday
November 28, 1980

Highlights

78997 **National Family Week** Presidential proclamation

78995 **Central Intelligence Agency Retirement and Disability System** Executive Order

79035 **Grant Programs—Education** ED issues final regulations for the Secretary's Discretionary Program, which assists in the development of innovative methods which contribute to the solution of educational problems

78999 **Food Stamps** USDA/FNS clarifies when a trust fund may be considered inaccessible to household and therefore excluded from consideration as a resource under Food Stamp Program; effective 11-28-80

79038 **Copyright** Library of Congress adopts final regulations to implement compulsory license for making and distributing phonorecords; effective 12-29-80

79386 **Recombinant DNA Research** HHS/NIH sets forth proposed actions to be taken under guidelines for research involving recombinant DNA Molecules; comments by 12-29-80

CONTINUED INSIDE

Highlights

FEDERAL REGISTER Published daily, Monday through Friday, (not published on Saturdays, Sundays, or on official holidays), by the Office of the Federal Register, National Archives and Records Service, General Services Administration, Washington, D.C. 20408, under the Federal Register Act (49 Stat. 500, as amended; 44 U.S.C. Ch. 15) and the regulations of the Administrative Committee of the Federal Register (1 CFR Ch. I). Distribution is made only by the Superintendent of Documents, U.S. Government Printing Office, Washington, D.C. 20402.

The Federal Register provides a uniform system for making available to the public regulations and legal notices issued by Federal agencies. These include Presidential proclamations and Executive Orders and Federal agency documents having general applicability and legal effect, documents required to be published by Act of Congress and other Federal agency documents of public interest. Documents are on file for public inspection in the Office of the Federal Register the day before they are published, unless earlier filing is requested by the issuing agency.

The Federal Register will be furnished by mail to subscribers, free of postage, for $75.00 per year, or $45.00 for six months, payable in advance. The charge for individual copies is $1.00 for each issue, or $1.00 for each group of pages as actually bound. Remit check or money order, made payable to the Superintendent of Documents, U.S. Government Printing Office, Washington, D.C. 20402.

There are no restrictions on the republication of material appearing in the Federal Register.

Questions and requests for specific information may be directed to the telephone numbers listed under INFORMATION AND ASSISTANCE in the READER AIDS section of this issue.

79218 **Washington National Airport** DOT/Sec'y implements portion of special regulation which allocates Instrument Flight Rules reservations by publishing two tables setting forth assignment of slots

79302 **Water Pollution Control** EPA announces availability and provides summaries of water quality criteria for toxic pollutants (Part V of this issue)

79094 **Noise Control** DOT/FAA publishes final rules concerning operating noise limits for airplanes; effective 2-1-81 with comments by 3-1-81 and 11-28-80 (2 documents) (Part IV of this issue)

79094 **Income Taxes** Treasury/IRS publishes proposed regulation amendments relating to partnerships and investment credit for certain used property; comments by 1-27-81

79032 **Grant Programs—Education** ED issues final rules pertaining to higher education programs in modern foreign language training and invites applications for grants; apply by 1-15-81

79166 **Grant Programs—Health** HHS/HSA gives notice that competitive applications are now being accepted for project grants to develop and expand home health services and grants for demonstrating training of home health personnel pending congressional approval; apply by 6-1-81

79120 **Improving Government Regulations** GSA and CAB publishes semiannual agenda of significant regulations

79079 **Credit Unions** NCUA, in a proposed rule, would eliminate current regulations which require Federal credit unions to obtain prior consent before granting long-term real estate loans; comments by 12-31-80

79104 **ZIP Codes** PS amends regulations as preliminary step in the proposed expansion of existing five-digit ZIP Code by adding a hyphen and four new numbers; comments by 1-5-81

79223 **Sunshine Act Meetings**

Separate Parts of This Issue

79258 **Part II, DOT/CG**
79266 **Part III, Labor/ESA**
79302 **Part IV, DOT, FAA (2 documents)**
79318 **Part V, EPA**
79382 **Part VI, EPA**
79386 **Part VII, HHS/NIH**
79390 **Part VIII, EPA**
79402 **Part IX, Interior/BLM**

Contents

Federal Register
Vol. 45, No. 231
Friday, November 28, 1980

The President
EXECUTIVE ORDERS
78995 Central Intelligence Agency Retirement and Disability System (EO 12253)
PROCLAMATIONS
78997 National Family Week (Proc. 4806)

Executive Agencies

Administrative Conference of United States
NOTICES
Meetings:
79129 Informal Action Committee
79129 Licenses and Authorizations Committee
79129 Plenary Session

Agricultural Marketing Service
RULES
79006 Hops of domestic production
79004 Lettuce grown in Tex.
79004 Lemons grown in Ariz. and Calif.
79002 Oranges, grapefruit, tangerines and tangelos grown in Fla.
79003 Oranges (navel) grown in Ariz. and Calif. (2 documents)

Agricultural Stabilization and Conservation Service
RULES
79001 Cotton, extra long staple; marketing quotas and acreage allotments
PROPOSED RULES
79078 Tobacco (burley); marketing quotas; correction

Agriculture Department
See also Agricultural Marketing Service; Agricultural Stabilization and Conservation Service; Commodity Credit Corporation; Food and Nutrition Service; Food Safety and Quality Service; Rural Electrification Administration.
NOTICES
79132 Jurisdictional transfer:
Tongass National Forest, Alaska

Antitrust Division
NOTICES
Competitive impact statements and proposed consent judgments:
79186 Agri-Mark, Inc., et al.

Arts and Humanities, National Foundation
NOTICES
Meetings:
79204 Humanities Panel

Civil Aeronautics Board
PROPOSED RULES
Improving Government regulations:
79080 Regulatory agenda
NOTICES
Hearings, etc.:
79132 Sun Pacific Airlines fitness investigation

Coast Guard
RULES
Anchorage regulations:
79031 Florida
PROPOSED RULES
Anchorage regulations:
79103 California
Drawbridge operations:
79104 Florida
79105 Georgia
Merchant marine officers and seamen:
79258 Licensing of pilots; standards and training; hearings

Commerce Department
See also International Trade Administration; Minority Business Development Agency; National Oceanic and Atmospheric Administration; National Technical Information Service.
RULES
79016 Freedom of Information Act; implementation

Commodity Credit Corporation
RULES
Loan and purchase programs:
79007 Honey
79008 Tobacco
NOTICES
79129 Price support programs; wool and mohair payment

Conservation and Solar Energy Office
PROPOSED RULES
Appliances and consumer products:
79078 Efficiency standards; certification and enforcement; meeting

Copyright Office, Library of Congress
RULES
79038 Phonorecords, nondramatic musical works; complusory license for making and distributing
NOTICES
79202 Rights of creators and needs of users of works reproduced by certain libraries and archives; hearing

Customs Service
NOTICES
Tariff reclassification:
79221 Three-wheel all-terrain vehicles

Defense Department
See Engineers Corps.

Drug Enforcement Administration
NOTICES
Registration applications, etc.; controlled substances:
79201 Alameda Laboratories, Inc.
79201 Ciba Geigy Corp.
79201 Philadelphia Seed Co.
79201 Turner, Carlton; Pharmacognosy Department; University of Mississippi

Economic Regulatory Administration
NOTICES
Consent orders:
79141 Dee & Dee Oil Co.
Compliance plans:
79142 Hertz Corp.
Environmental statements; availability, etc.:
79142 Port Jefferson Generating Station; Suffolk, N.Y.; meeting

Education Department
RULES
79035 Discretionary program
79032 Higher education programs in modern foreign language training and area studies; selection criteria
NOTICES
Grant applications and proposals, closing dates:
79138 Higher education programs in modern foreign language training and area studies (Fulbright-Hays)

Employment Standards Administration
NOTICES
79266 Minimum wages for Federal and federally-assisted construction; general wage determination decisions, modifications, and supersedeas decisions (Ark., Calif., Colo., Fla., Md., Mass., Mo., Nev., N. Mex., Ohio, Pa., Wash.)

Energy Department
See also Conservation and Solar Energy Office; Economic Regulatory Administration; Energy Research Office; Federal Energy Regulatory Commission.
NOTICES
Meetings:
79139 Dose Assessment Advisory Group
79139 Uranium enrichment services; termination charges

Energy Research Office
NOTICES
Meetings:
79143, 79144 Energy Research Advisory Board (2 documents)

Engineers Corps
NOTICES
Environmental statements; availability, etc.:
79137 Fall River Harbor Improvement Dredging Project and Fall River/Providence River Harbors Dredging Actions, Mass.

Environmental Protection Agency
RULES
Air quality implementation plans; approval and promulgation; various State, etc.:
79052 Ohio
79051 Oklahoma
Pesticide chemicals in or on raw agricultural commodities; tolerances and exemptions, etc.:
79068 Thiabendazole
Water quality standards; State plans:
79053 Ohio
PROPOSED RULES
Air pollution; standards of performance for new stationary sources:
79390 Metal furniture surface coating facilities; volatile organic compounds (VOC) emission limits
Air pollution control; new motor vehicles and engines:
79116 Carbon monoxide emission standards; light-duty vehicles, 1982 model year; waiver application
79382 Emission reductions; heavy-duty engines and light-duty trucks; advance notice
Air quality implementation plans; approval and promulgation; various States, etc.:
79116 Tennessee
Hazardous waste programs, State; interim authorizations:
79117 South Carolina
79118 Tennessee
Pesticide chemicals in or on raw agricultural commodities; tolerances and exemptions, etc.:
79119 (*O,O,*-dimethyl *S*-[(4-oxo-1,2,3-benzotriazin-3(4*H*)-yl)methyl] phosphorodithioate
NOTICES
Environmental statements; availability, etc.:
79155 Agency statements; weekly receipts
Pesticides; emergency exemption applications:
79149 Carbaryl
79153, 79154 Monocrotophos (2 documents)
79153 Tetraethyl pyrophosphate
Toxic and hazardous substances control:
79150, 79152, 79157 Premanufacture notices receipts (3 documents)
Water pollution control:
79318 Toxic pollutants or pollutant categories; water quality criteria documents; availability

Export-Import Bank
NOTICES
79223 Meetings; Sunshine Act

Federal Aviation Administration
RULES
Air traffic operating and flight rules:
79302 Noise limitation standards for U.S. registered large general aviation airplanes; effective date delayed
79302 Noise limits; turbojet airplanes in domestic or foreign air commerce
Aircraft products and parts, certification:
79009 Agricultural operation and fire fighting propeller-driven small airplanes; noise abatement operating restriction; correction
Airworthiness directives:
79010 Boeing
79011 Hughes
79011 Lockheed
79012 McDonnell Douglas
79013 Rolls-Royce; correction
79013 Control areas; correction
79014 Restricted areas
79014 Standard instrument approach procedures
79013 Transition areas
PROPOSED RULES
79088 Transition areas
NOTICES
79216 Consumer program; final; correction

Washington National Airport; temporary allocation of IFR reservations; request for comments (Editorial note: For a document on this subject see entry under Transportation Department).

Federal Bureau of Investigation
NOTICES
Committees; establishment, renewals, terminations, etc.:
79201 National Crime Information Center Advisory Policy Board

Federal Deposit Insurance Corporation
NOTICES
79223 Meetings; Sunshine Act (3 documents)

Federal Election Commission
NOTICES
79224 Meetings; Sunshine Act

Federal Emergency Management Agency
RULES
Flood elevation determinations:
79070 Michigan; correction
79071 Flood insurance program; State assistance program; implementation
79069 Floodplain management and wetlands protection; criteria and procedures; denial of new or renewed policy, temporary suspension
PROPOSED RULES
79122 Floodplain management and wetlands protection
NOTICES
Senior Executive Service:
79158 Bonus award schedule

Federal Energy Regulatory Commission
RULES
Practice and procedure:
79024 Subdelegation authority revision
NOTICES
Hearings, etc.:
79145 Bubble Machine
79146 Edison Sault Electric Co.
79147 Electric Cooperatives of Kansas
79147 Energy Gathering, Inc.
79147 Illinois Power Co.
79148 Iowa Southern Utilities Co.
79148 Mississippi Power Co.
79148, 79149 Montana Power Co. (3 documents)
79144 Northern States Power Co.
79144 Pacific Power & Light Co.
79144 Panhandle Eastern Pipe Line Co.
79145 Southwest Gas Corp.
79146 Virginia Electric & Power Co.
79146 Washington Water Power Co.
79146 William's Mobil Service
79224, 79225 Meetings; Sunshine Act (4 documents)

Federal Highway Administration
NOTICES
79216 Motor carrier study, interstate; docket number assignment and inquiry

Federal Maritime Commission
RULES
79074 Non-exclusive equipment interchange agreements, exemption
NOTICES
79158, 79159 Agreements filed, etc. (2 documents)
Casualty and nonperformance, certificates:
79160 Bahama Cruise Line, Inc., et al. (2 documents)
Energy and environmental statements; availability, etc.:
79160 Global Terminal and Container Services, Inc., and Hafskip, Ltd.; stevedoring and various terminal services
Freight forwarder licenses:
79160 Eller & Co., Inc.
Organization, functions, and authority delegations:
79160 Secretary; manual of orders; environmental assessments

Federal Reserve System
NOTICES
79225 Meetings; Sunshine Act

Fish and Wildlife Service
RULES
Fishing:
79076 Colusa National Wildlife Refuge et al., Calif.
Hunting:
79075 Anahuac National Wildlife Refuge, Tex.

Food and Drug Administration
RULES
Animal drugs, feeds, and related products:
79027 Tylosin (2 documents)
Hearings, public, before advisory committees; establishment or termination, etc.:
79025 Anti-Infective Drugs Advisory Committee et al.
Radiological health:
79028 Microwave ovens; radiation leakage compliance measurement instrument requirements and test conditions
PROPOSED RULES
Biological products:
79092 Blood and blood products; source plasma (human) standards
Human and veterinary drugs:
79089 Radioactive drugs; reduction of reserve sample retention requirements
Human drugs:
79091 Erythromycin enteric-coated tablets; disintegration standard
Medical devices:
79093 Labeling and restricted devices; extension of time
NOTICES:
Animal drugs, feeds, and related products:
79165 Carbadox and pyrantel tartrate, etc.; applications and hearing
Committees; establishment, renewals, terminations, etc.:
79162 Anti-Infective Drugs Advisory Committee; nominations
79164 Dermatologic Drugs Advisory Committee; nominations
79163 Ophthalmic Drugs Advisory Committee; nominations
79163 Tea Experts Board
Medical devices:
79161 Ovutime Tackiness Rheometer, cervical mucus viscometer; reclassification recommendation
Meetings:
79165 Consumer participation; information exchange (2 documents)

Food and Nutrition Service
RULES
Food Stamp program:
78999 Trust funds, resource exclusion

Food Safety and Quality Service
NOTICES
Meat and poulty inspection, mandatory:
79130 Labeling procedures notification; prior approval program

General Services Administration
PROPOSED RULES
Improving Government regulations:
79120 Regulatory agenda
NOTICES
79161 Automated data and telecommunications service; validating COBOL and FORTRAN compilers; annual schedules
Meetings:
79160 Automated data and telecommunications service; computer programming language compiler validation

Health, Education, and Welfare Department
See Education Department; Health and Human Services Department.

Health and Human Services Department
See also Food and Drug Administration; Health Services Administration; National Institutes of Health.
NOTICES
79172 Freedom of Information Act; implementation; medicare program disclosure policy
Organization, functions, and authority delegations:
79168 Social Security Administration

Health Services Administration
NOTICES
Grants availability, etc.:
79166 Home health services and training projects

Indian Affairs Bureau
RULES
79031 Fishing; Hoopla Valley Indian reservation; final; correction
PROPOSED RULES
79094 Heritage preservation (archeological, cultural, etc.); extension of time

Interior Department
See Fish and Wildlife Service; Indian Affairs Bureau; Land Management Bureau; National Park Service.

Internal Revenue Service
PROPOSED RULES
Income taxes:
79094 Partnerships and investment credit for used property

International Trade Administration
RULES
Countervailing duties:
79025 Fish from Canada; revoked
NOTICES
Meetings:
79132, 79133 Computer Systems Technical Advisory Committee (2 documents)

International Trade Commission
NOTICES
79225 Meetings; Sunshine Act

Interstate Commerce Commission
PROPOSED RULES
Intermodel transportation:
79123 Trailer on flatcar and container on flatcar (TOFC/COFC) service improvement
NOTICES
Motor carriers:
79175 Finance applications
79174 Intercorporate hauling operations; intent to engage in
79176–79184 Permanent authority applications (3 documents)
Railroad services abandonment:
79186 Soo Line Railroad Co.
79186 Western Maryland Railway Co.

Justice Department
See also Antitrust Division; Drug Enforcement Administration; Federal Bureau of Investigation.
PROPOSED RULES
79095 Inmate grievance procedures; standards

Labor Department
See Employment Standards Administration.

Land Management Bureau
RULES
Public land orders:
79069 Alaska
79069 California; correction
NOTICES
Meetings:
79172 Phoenix District Multiple Use Advisory Council
79173 Winnemucca District Multiple Use Advisory Council
Outer Continental Shelf; oil and gas lease sales:
79402 California

Minority Business Development Agency
NOTICES
79134 Financial assistance application announcements (2 documents)

National Credit Union Administration
PROPOSED RULES
Federal credit unions:
79079 Real estate lending; deregulation

National Highway Traffic Safety Administration
PROPOSED RULES
Motor vehicle safety standards:
79122 Glazing materials; bullet resistant shield, etc.; rulemaking petition
NOTICES
Motor vehicle safety standards; exemption petitions, etc.:
79216 General Motors Corp.: hydraulic brake systems
79217 Volkswagen of America, Inc.; glazing materials; petition denied

79217 White Motor Corp.; control location, identification, and illumination; petition granted

National Institutes of Health
NOTICES
Meetings:
79167 Arteriosclerosis, Hypertension and Lipid Metabolism Advisory Committee
79168 Cardiology Advisory Committee
79168 High Blood Pressure Working Group
79386 Recombinant DNA Advisory Committee
Recombinant DNA molecules research:
79386 Actions under guidelines

National Mediation Board
NOTICES
79225 Meetings; Sunshine Act

National Oceanic and Atmospheric Administration
PROPOSED RULES
79089 Deep seabed mining; availability; meeting for future proposed rulemaking
Fishery conservation and management:
79126 Atlantic surf clam and ocean quahog; New Jersey area closure; extension of time
79126 Foreign fishing; trawl fishery and herring gillnet fishery, Eastern Bering Sea and Northeast Pacific Ocean
79126 Shrimp, Gulf of Mexico; correction

National Park Service
NOTICES
Management and development plans:
79173 Buffalo National River, Ark.; Buffalo Point, Pruitt, and Tyler Bend development area
Meetings:
79173 Upper Delaware Citizens Advisory Council

National Technical Information Service
NOTICES
79133 Inventions, Government-owned; availability for licensing

National Transportation Safety Board
NOTICES
79205 Accident reports, safety recommendations and responses, etc.; availability

Nuclear Regulatory Commission
NOTICES
Meetings:
79209 Reactor Safeguards Advisory Committee
Reports; availability, etc.:
79209 Utility management structure and technical resources guidelines; inquiry; extension of time

Occupational Safety and Health Review Commission
NOTICES
79225 Meetings; Sunshine Act (3 documents)

Oceans and Atmosphere, National Advisory Committee
NOTICES
79204 Meetings

Personnel Management Office
RULES
78999 Freedom of Information Act; implementation
PROPOSED RULES
Health benefits and life insurance, Federal employees:
79078 Employees hired under career-related work study programs; coverage, clarification

Postal Service
PROPOSED RULES
Domestic Mail Manual:
79104 ZIP Code system, expansion to nine digits

Rural Electricification Administration
NOTICES
Loan guarantees, proposed:
79132 Indiana Statewide Rural Electric Cooperative, Inc.

Securities and Exchange Commission
RULES
79018 Brokers and dealers; short selling
79022 Holding company subsidiaries or affiliates, non-utility; exemption from certain duties and liabilities, etc.
NOTICES
Hearings, etc.:
79210 Merrill Lynch, Pierce, Fenner & Smith Inc. et al
Self-regulatory organizations; proposed rule changes:
79210 American Stock Exchange, Inc.
79213 Midwest Stock Exchange, Inc.
79214 National Securities Clearing Corp.
Self-regulatory organizations; unlisted trading privileges:
79214 Midwest Stock Exchange, Inc.
79214 Pacific Stock Exchange, Inc.

Selective Service System
NOTICES
Senior Executive Service:
79214 Bonus award schedule

Small Business Administration
NOTICES
Applications, etc.:
79215 DJS Capital Group
79215 Peachtree Capital Corp.
Disaster areas:
79215, 79216 Texas (2 documents)
79216 West Virginia
Meetings:
79215 Small business continuity

Textile Agreements Implementation Committee
NOTICES
Cotton textiles:
79135 Korea
Man-made textiles:
79136 Costa Rica
79136 Taiwan

Transportation Department
See also Coast Guard; Federal Aviation Administration; Federal Highway Administration; National Highway Traffic Safety Administration; Urban Mass Transportation Administration.
NOTICES
79218 Washington National Airport; temporary allocation of IFR reservations; request for comments

Treasury Department
See Customs Service; Internal Revenue Service.

United States Railway Association
NOTICES
79226 Meetings; Sunshine Act (2 documents)

Urban Mass Transportation Administration
NOTICES
Environmental statements; availability, etc.:
79221 Boston Southwest Corridor, transportation alternatives

Women, President's Advisory Committee
NOTICES
79209 Meetings

MEETINGS ANNOUNCED IN THIS ISSUE

ADMINISTRATIVE CONFERENCE OF THE UNITED STATES
79129 Informal Action Committee, Washington, D.C., 12-11-80
79129 Licenses and Authorizations Committee, Washington, D.C., 12-11-80
79129 Plenary Session, Washington, D.C., 12-11 and 12-12-80

ARTS AND HUMANITIES, NATIONAL FOUNDATION
79204 Humanities Panel, Washington, D.C., 12-16 and 12-17-80; 1-8, 1-12 and 1-14-81

COMMERCE DEPARTMENT
International Trade Administration—
79132 Computer Systems Technical Advisory Committee, Washington, D.C., 12-17-80
79133 Hardware Subcommittee of the Computer Systems Technical Advisory Committee, Washington, D.C., 12-16-80
National Oceanic and Atmospheric Administration—
79089 Deep Seabed Mining, Washington, D.C., 12-17-80

ENERGY DEPARTMENT
Conservation and Solar Energy Office—
79078 Energy efficiency standards program for consumer products, Washington, D.C., 12-5-80
Defense Programs Office—
79139 Dose Assessment Advisory Group, Las Vegas, Nev., 12-2 through 12-4-80
Energy Research Office—
79143 Biomass Panel, Energy Research Advisory Board, Washington, D.C., 12-18 and 12-19-80
79144 Inertial Confinement Fusion Review Panel, Energy Research Advisory Board, Washington, D.C., 12-18-80

GENERAL SERVICES ADMINISTRATION
79160 Computer Programming Language Compiler Validation, Washington, D.C., 12-17-80

HEALTH AND HUMAN SERVICES DEPARTMENT
Food and Drug Administration—
79165 Consumer Exchange, Detroit, Mich. and Brooklyn, N.Y., 12-9-80
National Institutes of Health—
79167 Arteriosclerosis, Hypertension and Lipid Metabolism Advisory Committee, Bethesda, Md., 1-13-81
79168 Cardiology Advisory Committee, Bethesda, Md. 1-12 and 1-13-81
79168 High Blood Pressure Working Group, Bethesda, Md., 1-12-81
79386 Recombinant DNA Advisory Committee, Bethesda, Md., 1-8-81

INTERIOR DEPARTMENT
Land Management Bureau—
79172 Phoenix District Multiple Use Advisory Council, Phoenix, Ariz., 1-9-81
79173 Winnemucca District Multiple Use Advisory Council, Winnemucca, Nev., 1-16-81
National Park Service—
79173 Upper Delaware Citizens Advisory Council, Narrowsburg, N.Y., 12-12-80

NUCLEAR REGULATORY COMMISSION
79209 Site Evaluation and Reactor Radiological Effects Subcommittees, Advisory Committee on Reactor Safeguards, Washington, D.C., 12-13-80

PRESIDENT'S ADVISORY COMMITEE FOR WOMEN
79209 Meeting, Washington, D.C., 12-16-80

SMALL BUSINESS ADMINISTRATION
Chief Counsel for Advocacy Office—
79215 Special Task Group of Small Business People, Washington, D.C., 12-16-80

TRANSPORTATION DEPARTMENT
Urban Mass Transportation Administration—
79221 Analysis of transportation alternatives in the Southwest corridor and preparation of related draft environmental impact statement Scoping Meeting, Roxbury, Mass., 12-11-80

CHANGED MEETING

OCEANS AND ATMOSPHERE, NATIONAL ADVISORY COMMITTEE
79204 Meeting, Washington, D.C., 12-1-80

HEARINGS

ENVIRONMENTAL PROTECTION AGENCY
79117 South Carolina interim authorization application, 12-30-80
79118 Tennessee interim authorization application, 12-29-80

INTERIOR DEPARTMENT
Indian Affairs Bureau—
79094 Heritage preservation, 12-12 and 12-13-80

LIBRARY OF CONGRESS
Copyright Office—
79202 Rights of creators and the needs of users of works reproduced by certain libraries and archives, 1-28-81

CFR PARTS AFFECTED IN THIS ISSUE

A cumulative list of the parts affected this month can be found in the Reader Aids section at the end of this issue.

3 CFR
Proclamations:
4806 78997
Executive Orders:
12253 78995

5 CFR
294 78999
Proposed Rules:
870 79078
890 79078

7 CFR
272 78999
273 78999
722 79001
905 79002
907 (2 documents) 79003
910 79004
971 79004
991 79006
1434 79007
1464 79008
Proposed Rules:
726 79078

10 CFR
Proposed Rules:
430 79078

12 CFR
Proposed Rules:
701 79079

14 CFR
21 79009
39 (5 documents) 79010–79013
71 (2 documents) 79013
73 79014
91 (2 documents) 79302
97 79014
Proposed Rules:
Ch. II 79080
71 79088

15 CFR
4 79016
Proposed Rules:
970 79089

17 CFR
240 79018
250 79022

18 CFR
375 79024

19 CFR
355 79025

21 CFR
14 79025
510 (2 documents) 79027
558 (2 documents) 79027
1030 79028
Proposed Rules:
211 79089
452 79091
640 79092
801 79093
899 79093

25 CFR
258 79031
Proposed Rules:
281 79094

26 CFR
Proposed Rules:
1 79094

28 CFR
Proposed Rules:
40 79095

33 CFR
110 79031
Proposed Rules:
110 79103
117 (2 documents) 79101, 79102

34 CFR
662 79032
764 79035

37 CFR
201 79038

39 CFR
Proposed Rules:
111 79104

40 CFR
52 (2 documents) 79051, 79052
120 79053
180 79068
Proposed Rules:
52 79116
60 79390
86 (2 documents) 79116, 79382
123 (2 documents) 79117, 79118
180 79119

41 CFR
Proposed Rules:
Ch. 101 79120
Ch. 105 79120

43 CFR
Public Land Orders:
850 (Revoked by PLO 5776) 79069
5186 (Amended by PLO 5776) 79069
5187 (Amended by PLO 5776) 79069
5759 79069
5776 79069

44 CFR
9 79069
67 79070
76 79071
Proposed Rules:
9 79122

46 CFR
524 79074
Proposed Rules:
10 79258

49 CFR
Proposed Rules:
571 79122
1039 79123
1090 79123
1300 79123

50 CFR
32 79075
33 79076
Proposed Rules:
611 (2 documents) 79126
652 79126
658 79126

Federal Register
Vol. 45, No. 231
Friday, November 28, 1980

Presidential Documents

Title 3—

The President

Executive Order 12253 of November 25, 1980

Central Intelligence Agency Retirement and Disability System

By the authority vested in me as President of the United States of America by Section 292 of the Central Intelligence Agency Retirement Act of 1964 for Certain Employees, as amended (50 U.S.C. 403 note), and in order to conform the Central Intelligence Agency Retirement and Disability System to certain amendments to the Civil Service Retirement and Disability System (Public Law 96-179), it is hereby ordered as follows:

1-101. The Director of Central Intelligence shall maintain the Central Intelligence Agency Retirement and Disability System in accordance with the following:

(a) Eliminate the "living with" requirement in the case of recognized natural children.

(b) Add a requirement of dependency to the definition of child and define "dependent" as follows: "Dependent," in the case of any child, means that the participant involved was, at the time of the participant's death, either living with or contributing to the support of such child, as determined in accordance with such regulations as the Director shall prescribe.

1-102. The provisions of Section 1-101 are effective as of January 2, 1980.

1-103. The Director of Central Intelligence is authorized to prescribe such regulations as are necessary to carry out the provisions of this Order.

Jimmy Carter

THE WHITE HOUSE,
November 25, 1980.

[FR Doc. 80-37344
Filed 11-26-80; 11:14 am]
Billing code 3195-01-M

Presidential Documents

Proclamation 4806 of November 26, 1980

National Family Week, 1980

By the President of the United States of America

A Proclamation

The American family has been the most resilient, dynamic force in the growth and development of our Nation. Yet its influence is so subtle that we tend to take for granted the vital functions it performs as the source of love, support, and guidance, the wellspring of courage, determination and inspiration.

National Family Week gives us a chance to highlight the special contributions and needs of the family, to acknowledge the new challenges that American families now face, and to act on the many significant recommendations generated by the White House Conference on Families.

It is a time to seek ways to strengthen and support the family—a time to renew the realization that the fundamental integrity and vitality of the Nation relies on the underlying health of the American family.

NOW, THEREFORE, I, JIMMY CARTER, President of the United States of America, in accordance with Senate Joint Resolution 156, do hereby request that the week of November 23, 1980, be designated National Family Week and call upon the people of the United States to observe this week with appropriate activities in their communities.

IN WITNESS WHEREOF, I have hereunto set my hand this twenty-sixth day of November, in the year of our Lord nineteen hundred and eighty, and of the Independence of the United States of America the two hundred and fifth.

Jimmy Carter

[FR Doc. 80-37345
Filed 11-26-80; 11:15 am]
Billing code 3195-01-M

Rules and Regulations

Federal Register
Vol. 45, No. 231
Friday, November 28, 1980

This section of the FEDERAL REGISTER contains regulatory documents having general applicability and legal effect, most of which are keyed to and codified in the Code of Federal Regulations, which is published under 50 titles pursuant to 44 U.S.C. 1510.
The Code of Federal Regulations is sold by the Superintendent of Documents. Prices of new books are listed in the first FEDERAL REGISTER issue of each month.

OFFICE OF PERSONNEL MANAGEMENT

5 CFR Part 294

Availability of Official Information

AGENCY: Office of Personnel Management.

ACTION: Final rule.

SUMMARY: OPM is revising the fees it charges for satisfying requests made under the provisions of the Feedom of Information Act.

EFFECTIVE DATE: December 29, 1980.

FOR FURTHER INFORMATION CONTACT: James Conners, Office of Management, Office of Personnel Management, 1900 E Street NW., Washington, D.C. 20415, (202)–632–4533.

SUPPLEMENTARY INFORMATION: On July 29, 1980, OPM published (45 FR 50336) a proposed rule revising the fees charged for searching for and duplicating information requested under the Freedom of Information Act. The proposed rule was published because OPM had found that the fees then being charged were inaccurate, due to rising costs.

Comments on the proposed rule were invited. No comments on the proposed rule were received during the comment period. Accordingly, OPM hereby revises 5 CFR 294.107(c) by changing the fees charged for filling requests made under the Freedom of Information Act.

Office of Personnel Management.

Beverly M. Jones,

Issuance System Manager.

Accordingly, the Office of Personnel Management revises 5 CFR 294.107(c) to read as follows:

§ 294.107 Service Charges for Information.

* * * * *

(c) *Schedule of Fees.* When a request is made for information under section 552 of title 5, United States Code, the Office will charge fees for searching and duplicating the information at the rates shown in the following schedule:

Photocopies per page	$0 10
Printed material per 25 pages or fraction thereof	0 25
Manual records search, per hour	
Professional employee	9 00
Clerical employee	5 00
Automated records search	
Programming, per hour	17 00
Keypunching, per 1,000 card-image records	183 00
Duplication, per hour	45 00
Computer time, per quarter-hour	219 00

(Charges will be assessed only for actual resources used)

* * * * *

(5 U.S.C. 552, Freedom of Information Act, Pub. L. 92–502)

[FR Doc. 80-37041 Filed 11-26-80; 8:45 am]

BILLING CODE 6325-01-M

DEPARTMENT OF AGRICULTURE

Food and Nutrition Service

7 CFR Parts 272 and 273

[Amendment No. 178]

Food Stamp Program—Resource Exclusion of Trust Funds

AGENCY: Food and Nutrition Service, USDA.

ACTION: Final rule.

SUMMARY: This final rule clarifies conditions under which a trust fund may be considered inaccessible to a household and therefore excluded from consideration as a resource by revising the exclusion from resources section of current Food Stamp Program (FSP) regulations. The amendment allows for a resource exclusion of irrevocable trust funds, established by a non-household member from non-household (third-party) funds, when the trust fund is administered by a court or other specific entity. This rule also amends the definition of income section of FSP regulations to require that any withdrawals from trust funds be considered as income to the household. Proposed regulations concerning this amendment were published at 45 FR 51216, August 1, 1980.

EFFECTIVE DATE: November 28, 1980.

FOR FURTHER INFORMATION CONTACT: Larry R. Carnes, Chief, Policy and Regulations Section, Program Development Division, Family Nutrition Programs, FNS, USDA, Room 678, 500 12th Street SW., Washington, D.C. 20250. (202) 447–9075.

The Final Impact Statement describing the options considered in developing this final rule and the impact of implementing each option is available from Claire Lipsman, Director, Program Development Division, Family Nutrition Programs, FNS, USDA, Room 658, 500 12th Street SW., Washington, D.C. 20250. (202) 447–8325.

SUPPLEMENTARY INFORMATION: This final action has been reviewed under USDA procedures established in Secretary's memorandum 1955 to implement Executive Order 12044, and has been classified as "not significant."

Introduction

On August 1, 1980 the Department published proposed rulemaking (45 FR 51216) to further clarify conditions under which a trust fund may be considered inaccessible to a household and therefore excluded from consideration as a resource. This proposal was the result of a court suit filed in the State of New Jersey, *Whye* v. *Bergland*, No. 80–1355 (D.N.J., filed May 8, 1980), in which the plaintiff alleged that current regulations regarding resource exclusions resulted in the denial of food stamp eligibility of the plaintiffs. In the case of each plaintiff, the denial was based on excessive resources because a court-administered trust fund, established for the benefit of a minor household member as a result of accident or injury settlements, was counted as an available resource to the household involved. Although the trusts in these cases were established solely for the benefit of a minor household member, the funds were neither limited to pay for the educational expenses of the person named nor established solely to make investments and were, therefore, considered accessible based on the interpretation of § 273.8(e)(ii) of the FSP regulations in effect. The proposed regulations published on August 1, 1980 as a result of the *Whye* case would exclude as a resource a court-administered trust fund established for the benefit of a minor or incompetent as well as certain other trust funds established by a third party with nonhousehold funds. Furthermore, the proposal stated that any funds withdrawn from such trusts were to be

considered income to the household in the month received, unless otherwise exempt.

The Department encouraged interested parties to comment on this proposed rule by October 1, 1980. Subsequently, 29 letters were received concerning the Resource Exclusion of Trust Funds regulations. Twenty State agencies, six public interest groups and three FNS Regional Offices submitted comments.

After carefully reviewing the comments received, the Department has made several changes in the proposed regulations. This preamble addresses those changes as well as other major issues raised by the comments. A full understanding of the basis and purpose of the provisions not addressed here may require reference to August 1, 1980 Federal Register publication.

In general, most of the comments, including all of those from public interest groups, indicated support of the clarification the regulations provide. Several State agencies stated that such cases are relatively rare and that these regulations will have little impact. Eight State agencies specifically addressed the question raised by the Department in the preamble of the proposal concerning whether other States were treating court-administered trust funds in the same manner as New Jersey. Only three of them indicated that they had been treating trusts in this manner; the other five indicated that they relied more on an actual determination of inaccessibility.

One of the proposed requirements for a determination of inaccessibility was that "the trustee administering the funds is a court, or an institution, corporation, or organization which is not under the direction or ownership of any household member" [§ 273.8(e)(ii)]. One Regional office and one public interest group pointed out that there are situations in which an individual is appointed as trustee who has court-imposed limitations placed on the use of the funds making the trust as inaccessible as one administered by a court or institution. In light of this the Department decided to make a determination of inaccessibility in cases in which trustees are court-appointed individuals who have court-imposed limitations placed on their use of the funds. Those limitations must meet the requirements of these regulations if the trust funds are to be considered inaccessible.

One State agency indicated a need for clarification of "under the direction" by asking whether a bank employed by the household to act as trustee is to be considered under the direction of the household, thus rendering the trust fund "accessible." It was not intended that a bank, acting as a trustee, be considered under the direction of a household member. However, the terms of the trust must meet the the requirements of § 273.8(e)(8), even when the trustee is not under the direction of household member. Thus, trust funds administered by banks or other entities not under the direction of a household member are not for that reason alone "inaccessible" for food stamp purposes. Therefore, no change in the final rule was deemed necessary.

One agency asked whether a trust fund is excludable if one household member is appointed as guardian of another household member and has access to the fund. It is the Department's intention that such trust funds, if they cannot be used by the household (except for the person named in the trust for the purposes specified), should not be used to deny that household food stamp benefits. The issue is primarily the accessibility of the trust fund in question. If the guardian has unlimited access to a trust fund established for another household member, the fund should be counted as a resource. However, if the guardian must petition the court or has other court imposed limitation placed on withdrawal and use of funds and those limitations meet the requirements of these regulations, the rest of the household cannot benefit from the resources and the fund should be excluded from consideration.

A Regional office asked whether trusts established from household funds for non-household members are to be excluded as well. Trust funds for non-household members cannot benefit a household which does not have access to them. Therefore, those funds should also be excluded.

One public interest group suggested that trust funds established from household funds for medical expenses should also be excluded. An example of the requested exclusion is a trust fund established by parents to pay the lifetime medical expenses of a child born with birth defects. The need to provide for the medical care of disabled dependents constitutes a valid reason for establishing irrevocable trust funds from household resources. Therefore, the Department has determined that such trusts should be excluded from consideration as resources. The final rule has been amended accordingly.

Four State agencies and a Regional office objected to excluding as resources any trust fund established from household funds. These commenters believed that allowing an exclusion for these trusts would open the program to abuse. They felt that such a provision would allow a household to tie up liquid resources in inaccessible trust funds in order to qualify for food stamps. However, the comments received indicate that trust funds are extremely rare among food stamp households and that they are more likely to be established by a third party than from household funds. In some cases in which households have established funds themselves, the funds were placed in trust long before the household was in need of food stamps. The Department feels it would be unfair to penalize such households for diverting resources they thought they would never need into educational trust funds for their children or into medical trust funds for a disabled household member. Therefore, the Department has retained the exclusion for trust funds established by households under certain conditions.

The section dealing with income received from excludable trusts [§ 273.9(b)(vi)] received very few comments. Three State agencies requested clarification of the household's responsibility to report withdrawal of funds. As this is adequately addressed in the current regulations concerning change reporting requirements, the Department felt that further clarification was unnecessary. One State agency suggested that any income that *could be* obtained from an excluded trust, such as dividends that the household has the option of either collecting or reinvesting, should be counted as income, or that some penalty should be assessed for failure to take advantage of potential income. The Department feels that it is in the best interest of the Program for recipients to take advantage of all potential sources of income. Furthermore, this policy is consistent with the Internal Revenue Service's handling of such situations. Therefore, if a household has the ongoing option of receiving dividends or reinvesting them in the trust, such dividends shall be counted as income when they become available to the household, whether or not the household actually collects them. This does not apply to households who no longer have the option of receiving the dividends.

Three State agencies commented that the proposed 60 day implementation period was too short. One public interest group has urged that the implementation take place immediately. The Department realizes that some State agencies operate under various constraints that make implementation of any rule within 60 days difficult. However, the consent order resulting from the *Whye* case requires that these

regulations be implemented by February 1, 1981. Therefore, the final regulations require that implementation take place no later than February 1, 1981. This would allow States to implement earlier if they have the capability to do so, but will ensure that all States have implemented by the court-imposed deadline.

Therefore, Parts 272 and 273 are being amended as follows:

PART 272—REQUIREMENTS FOR PARTICIPATING STATE AGENCIES

7 CFR Part 272 is being amended as follows:

In § 272.1, a new subparagraph (21) is added to paragraph (g) of that subsection to read as follows:

§ 272.1 General terms and conditions.

* * * * *

(g) *Implementation.* * * *

(21) Amendment 178. State agencies shall implement the provisions of § 273.8 and § 273.9 of this amendment for all new applicants no later than February 1, 1981. States shall convert the current caseload to the new rules at recertification or at the time the case is otherwise reviewed, whichever comes first.

PART 273—CERTIFICATION OF ELIGIBLE HOUSEHOLDS

7 CFR Part 273 is being amended as follows:

1. Section 273.8(e)(8) is revised to read as follows:

§ 273.8 Resource eligibility standards.

* * * * *

(e) *Exclusions from resources.* * * *

(8) Resources having a cash value which is not accessible to the household, such as but not limited to, irrevocable trust funds, security deposits on rental property or utilities, property in probate, and real property which the household is making a good faith effort to sell at a reasonable price and which has not been sold. The State agency may verify that the property is for sale and that the household has not declined a reasonable offer. Verification may be obtained through a collateral contact or documentation, such as an advertisement for public sale in a newspaper of general circulation or a listing with a real estate broker. Any funds in a trust or transferred to a trust, and the income produced by that trust to the extent it is not available to the household, shall be considered inaccessible to the household if:

(i) The trust arrangement is not likely to cease during the certification period and no household member has the power to revoke the trust arrangement or change the name of the beneficiary during the certification period;

(ii) The trustee administering the funds is either: (A) a court, or an institution, corporation, or organization which is not under the direction or ownership of any household member, or (B) an individual appointed by the court who has court imposed limitations placed on his/her use of the funds which meet the requirements of this paragraph;

(iii) Trust investments made on behalf of the trust do not directly involve or assist any business or corporation under the control, direction, or influence of a household member; and

(iv) The funds held in irrevocable trust are either: (A) established from the household's own funds, if the trustee uses the funds solely to make investments on behalf of the trust or to pay the educational or medical expenses of any person named by the household creating the trust, or (B) established from non-household funds by a nonhousehold member.

2. In § 273.9, paragraph (b) is amended by adding a new subparagraph (2)(vi) to read as follows:

§ 273.9 Income and deductions.

* * * * *

(b) *Definition of income.* * * *

(2) * * *

(vi) Monies which are withdrawn or dividends which are or could be received by a household from trust funds considered to be excludable resources under § 273.8(e)(8). Such trust withdrawals shall be considered income in the month received, unless otherwise exempt under the provisions of § 273.9(c) of this section. Dividends which the household has the option of either receiving as income or reinvesting in the trust are to be considered as income in the month they become available to the household unless otherwise exempt under the provisions of § 273.9(c) of this section.

* * * * *

(91 Stat 958 (7 U.S.C. 2011-2027)

(Catalog of Federal Domestic Assistance Program No. 10.551, Food Stamps)

Dated: November 25, 1980.

Carol Tucker Foreman,

Assistant Secretary.

[FR Doc. 80-37240 Filed 11-26-80; 8:45 am]

BILLING CODE 3410-30-M

Agricultural Stabilization and Conservation Service

7 CFR Part 722

1981 Crop of Extra Long Staple Cotton; Acreage Allotments and Marketing Quotas

AGENCY: Agricultural Stabilization and Conservation Service, USDA.

ACTION: Final rule.

SUMMARY: The purpose of this rule is to establish State reserves, allocate State reserves to counties and establish county acreage allotments for the 1981 crop of extra long staple cotton (referred to as ELS cotton). The need for this rule is to satisfy the statutory requirements of the Agricultural Adjustment Act of 1938, as amended.

EFFECTIVE DATE: November 26, 1980.

ADDRESS: Director, Production Adjustment Division, ASCS, USDA, Room 3630 South Building, P.O. Box 2415, Washington, D.C. 20013.

FOR FURTHER INFORMATION CONTACT: Charles V. Cunningham, Chief, Program Analysis Branch, Production Adjustment Division, USDA-ASCS, P.O. Box 2415, Washington, D.C. 20013, 202-447-7873.

The Final Impact Statement describing the options considered in developing this final rule and the impact of implementing each option is available from the above named individual.

SUPPLEMENTARY INFORMATION: This final rule has been reviewed under USDA procedures established in Secretary's Memorandum No. 1955 to Implement Executive Order 12044, and has been classified "not significant".

The title and number of the federal assistance programs that this notice applies to are: Title—Cotton Production Stabilization; Number 10.052 as found in the Catalog of Federal Domestic Assistance.

This action will not have a significant impact specifically on area and community development. Therefore, review as established by OMB Circular A-95 was not used to assure that units of local government are informed of this action.

A notice that the Secretary of Agriculture was preparing to establish 1981 State and county ELS cotton acreage allotments was published in the Federal Register on August 8, 1980, (45 FR 52817) in accordance with 5 U.S.C. 553. One comment was received indicating that the past procedure for the apportionment of allotments was acceptable. This procedure is being followed.

Determinations with respect to 1981 State reserves and allocation of State reserves to counties were made initially by the respective State committees and are hereby approved and made effective by the Administrator, ASCS, pursuant to delegated authority (35 FR 19798, 36 FR 6907, 37 FR 624, 3845, 22008, 40 FR 18815, and 43 FR 51434).

In order that farmers may be informed of 1981 farm acreage allotments as soon as possible so that they may make plans accordingly, it is essential that these provisions be made effective as soon as possible.

Accordingly, it is hereby found and determined that compliance with the 30-day effective date requirement of 5 U.S.C. 553 is impracticable and contrary to the public interest. Therefore, this amendment to 7 CFR 722.562 shall become effective upon the filing of this document with the Director, Office of the Federal Register, with respect to the 1981 crop of ELS cotton. The material previously appearing in this section as "Subpart—1980 Crop of Extra Long Staple Cotton; Acreage Allotments and Marketing Quotas" remains in full force and effect as to the crop to which it was applicable.

Final Rule

Accordingly, 7 CFR § 722.562 is amended to read as follows:

§ 722.562 State reserves and county allotments for the 1981 crop of extra long staple cotton.

(a) *State reserves.* The State reserves for each State shall be established and allocated among uses for the 1981 crop of extra long staple cotton pursuant to § 722.508.

It is hereby determined that no State reserve is required for trends, abnormal conditions, inequities and hardships, or small farms.

The amount of the State reserve held in each State and the amount of allotment in the State productivity pool resulting from productivity adjustments under § 722.529, (c) and (d) is available for inspection at each State ASCS office.

(b) *County allotments.* County allotments are established for the 1981 crop of extra long staple cotton in accordance with § 722.509. The amount of the State allotment apportioned to counties is available for inspection at the respective State and county ASCS offices.

(Secs. 344, 347, 375, 63 Stat. 670, as amended, 675, as amended, 52 Stat. 66, as amended; 7 U.S.C. 1344, 1347, 1375)

Signed at Washington, D.C. on November 21, 1980.

Bill Cherry,

Acting Administrator, Agricultural Stabilization and Conservation Service.

[FR Doc. 80-37107 Filed 11-26-80; 8:45 am]
BILLING CODE 3410-05-M

Agricultural Marketing Service

7 CFR Part 905

[Orange, Grapefruit, Tangerine and Tangelo Regulation 4, Amendment 2]

Oranges, Grapefruit, Tangerines and Tangelos Grown In Florida; Amendment of Tangerine Size Requirements

AGENCY: Agricultural Marketing Service, USDA.

ACTION: Amendment to final rule.

SUMMARY: This amendment allows each handler to ship a quantity of smaller size Dancy variety tangerines (2 9/16 inches in diameter) during the week November 24 to November 30, 1980, equal to 35 percent of total shipments during a specified prior period. In the absence of this amendment only tangerines 2 9/16 inches in diameter could be shipped. This action will allow an increase in the supply of tangerines during the period specified in recognition of market needs and the size composition of available supply in the interest of growers and consumers.

EFFECTIVE DATE: November 24, 1980.

FOR FURTHER INFORMATION CONTACT: Malvin E. McGaha, Chief, Fruit Branch, F&V, AMS, USDA, Washington, D.C 20250, telephone 202-447-5975. The Final Impact Analysis relative to this final rule is available on request from the above named individual.

SUPPLEMENTARY INFORMATION: This final action has been reviewed under USDA procedures established in Secretary's Memorandum 1955 to implement Executive Order 12044, and has been classified "not significant." This regulation is issued under the marketing agreement and Order No. 905, (7 CFR Part 905), regulating the handling of oranges, grapefruit, tangerines, and tangelos grown in Florida. The agreement and order are effective under the Agricultural Marketing Agreement Act of 1937, as amended (7 U.S.C. 601-674). This action is based upon the recommendation and information submitted by the Citrus Administrative Committee, and upon other available information. It is hereby found that the regulation of Florida Dancy tangerines, as hereinafter provided, will tend to effectuate the declared policy of the act.

The minimum size requirements, herein specified, for domestic shipments reflect the Department's appraisal of the need for the amendment of the current regulation to permit handling of smaller size fresh Florida Dancy tangerines during the specified period based on market needs for greater supplies of such variety. Because of the growing conditions in the production area the amount of large fruit is less than anticipated and there is a need to augment the supply by permitting shipment of a proportion of the smaller sized fruit. The Dancy variety continues to size on the tree, and as the season progresses, increased quantities of such fruit is expected to meet the larger minimum size requirement. Relaxation of the minimum size requirements for a portion of each shipper's Dancy tangerine shipments will tend to promote the orderly marketing of Florida tangerines during the overlap period, when both the Robinson and Dancy varieties are being shipped.

The Citrus Administrative Committee, at an open meeting on November 18, 1980, reported that the amendment would allow shipment of approximately 41 additional carlots of Dancy variety tangerines during the specified period. The committee indicated there is a current market demand for limited quantities of smaller size Dancy tangerines, but markets presently can absorb only a portion of the supply of the smaller fruit of such variety without disruption of the markets.

The Department's Crop Reporting Board estimates the 1980-81 season's crop of Flordia tangerines at 6.5 million boxes, (approximately 13.0 million cartons). Hence the volume of tangerines is slightly smaller than that of last season.

The committee projected the market demand for all varieties of fresh tangerines this season, as follows: Dancy (2,500 carlots); Robinson (1,500 carlots); Honey (2,500 carlots). Each carlot is equivalent to one thousand cartons. The regulation, as amended, for Dancy tangerines relieves restrictions from those currently in effect, and amendment of such regulation, as hereinafter provided, will tend to avoid disruption of the orderly marketing of tangerines in the public interest.

It is concluded that the amendment of the size requirements, hereinafter set forth, is necessary to establish and maintain orderly marketing conditions and to provide acceptable size fruit in the interest of producers and consumers

pursuant to the declared policy of the act.

It is further found that it is impracticable and contrary to the public interest to give preliminary notice, engage in public rulemaking, and postpone the effective date until 30 days after publication in the Federal Register (5 U.S.C. 553), because of insufficient time between the date when information became available upon which this amendment is based and the effective date necessary to effectuate the declared policy of the act. Growers, handlers and other interested persons were given an opportunity to submit information and views on the amendment at an open meeting, and the amendment relieves restrictions on the handling of Florida tangerines. It is necessary to effectuate the declared purposes of the act to make the regulatory provisions effective as specified, and handlers have been apprised of such provisions and the effective time.

Accordingly, it is found that the provisions of § 905.304 (Orange, Grapefruit, Tangerine and Tangelo), Regulation 4; (45 FR 67047; 76651), should be and are amended by redesignating paragraph (d) as paragraph (e) and adding a new paragraph (d) reading as follows:

§ 905.304 Orange, Grapefruit, Tangerine, and Tangelo Regulation 4.

* * * * *

(d) *Percentage of size regulation applicable to Dancy variety tangerines.* Notwithstanding the provisions of Table I in paragraph (a) of this section, any handler may during the period November 24 through November 30, 1980, ship Dancy variety tangerines smaller than 2 5/16 inches in diameter: *Provided,* That such smaller tangerines are not smaller than 2 4/16 inches in diameter and: *Provided further,* That the quantity of such smaller tangerines does not exceed 35 percent of the quantity shipped in the applicable prior period as determined by the procedure specified in § 905.152 of this part.

* * * * *

(Secs. 1–19, 48 Stat. 31, as amended; 7 U.S.C. 601–674)

Dated, November 24, 1980, to become effective November 24, 1980.

D. S. Kuryloski,

Deputy Director, Fruit and Vegetable Division, Agricultural Marketing Service.

[FR Doc. 80-37114 Filed 11-26-80; 8:45 am]

BILLING CODE 3410-02-M

7 CFR Part 907

[Navel Orange Regulation 496, Amendment 2]

Navel Oranges Grown in Arizona and Designated Part of California; Minimum Size Regulation

AGENCY: Agricultural Marketing Service, USDA.

ACTION: Final rule.

SUMMARY: This amendment lowers the minimum diameter requirement applicable to fresh California-Arizona navel oranges from District 1, 3, or 4 to 2.45 inches in diameter during the period November 28 through December 25, 1980. In the absence of this amendment the minimum diameter requirement for such oranges would be 2.59 inches. This action is necessary to promote orderly marketing in the interest of producers and consumers.

EFFECTIVE DATE: November 28 through December 25, 1980.

FOR FURTHER INFORMATION CONTACT: Malvin E. McGaha, Chief, Fruit Branch, F&V, AMS, USDA, Washington, D.C. 20250, telephone 202–447–5975. The Final Impact Statement relative to this final rule is available upon request from the above named individual.

SUPPLEMENTARY INFORMATION: This final action has been reviewed under USDA procedures in Secretary's Memorandum 1955 to implement Executive Order 12044 and classified as "not significant." This regulation is issued under the marketing agreement and Order No. 907 (7 CFR Part 907), regulating the handling of navel oranges grown in Arizona and designated part of California. The agreement and order are effective under the Agricultural Marketing Agreement Act of 1937, as amended (7 U.S.C. 601–674). The action is based upon the recommendation and information submitted by the Navel Orange Administrative Committee and upon other available information. It is hereby found that the action will tend to effectuate the declared policy of the act.

This action was recommended at a public meeting at which all present could state their views. There is insufficient time between the date when information became available upon which this regulation is based and when the action must be taken to warrant a 60-day comment period as recommended in E.O. 12044, and it is impracticable and contrary to the public interest to give preliminary notice, engage in public rulemaking, and postpone the effective date until 30 days after publication in the Federal Register (5 U.S.C. 553). It is necessary to effectuate the declared purposes of the act to make these regulatory provisions effective as specified, and handlers have been apprised of such provisions and the effective time. This amendment relieves restrictions on the handling of California-Arizona navel oranges.

The committee met on November 18, 1980, to consider current crop and market conditions and other factors affecting the need for amendment of the current regulation, and recommended relaxation of the minimum size requirement for shipments of navel oranges grown in District 1, 3, or 4. The amendment recognizes the current and prospective marketing situation for California-Arizona navel oranges and is consistent with the size composition of the crop.

Therefore, paragraph (b) of § 907.796 (Navel Orange Regulation 496, (45 FR 75163; 76651)) is amended to read as follows (§ 907.796 expires January 1, 1981, and will not be published in the annual Code of Federal Regulations):

§ 907.796 Navel Orange Regulation 496.

(a) * * *

(b) During the period November 28 through December 25, 1980, any handler may handle navel oranges grown in District 1, 3, or 4 which are of a size smaller than 2.59 inches in diameter: *Provided,* That such smaller oranges shall be not smaller than 2.45 inches in diameter, except not to exceed 5 percent, by count, of the oranges in any container of such oranges may measure smaller than 2.45 inches in diameter.

* * * * *

(Secs. 1–19, 48 Stat. 31, as amended; 7 U.S.C. 601–674)

Dated November 24, 1980, to become effective November 28, 1980.

D. S. Kuryloski,

Deputy Director, Fruit and Vegetable Division, Agricultural Marketing Service.

[FR Doc. 80-37115 Filed 11-26-80; 8:45 am]

BILLING CODE 3410-02-M

7 CFR Part 907

[Navel Orange Regulation 498]

Navel Oranges Grown in Arizona and Designated Part of California; Limitation of Handling

AGENCY: Agricultural Marketing Service, USDA.

ACTION: Final rule.

SUMMARY: This regulation establishes the quantity of fresh California-Arizona navel oranges that may be shipped to market during the period November 28 through December 4, 1980. Such action is needed to provide for orderly marketing of fresh navel oranges for this period

due to the marketing situation confronting the orange industry.

EFFECTIVE DATE: November 28, 1980.

FOR FURTHER INFORMATION CONTACT: Malvin E. McGaha, 202-447-5975.

SUPPLEMENTARY INFORMATION: *Findings.* This regulation is issued under the marketing agreement, as amended, and Order No. 907, as amended (7 CFR Part 907), regulating the handling of navel oranges grown in Arizona and designated part of California. The agreement and order are effective under the Agricultural Marketing Agreement Act of 1937, as amended (7 U.S.C 601-674). This action is based upon the recommendations and information submitted by the Navel Orange Administrative Committee and upon other available information. It is hereby found that this action will tend to effectuate the declared policy of the act.

This action is consistent with the marketing policy for 1980-81 which was designated significant under the procedures of Executive Order 12044. The marketing policy was recommended by the committee following discussion at a public meeting on October 14, 1980. A final impact analysis on the marketing policy is available from Malvin E. McGaha, Chief, Fruit Branch, F&V, AMS, USDA, Washington, D.C. 20250, telephone 202-447-5975.

The committee met again publicly on November 24, 1980, at Los Angeles, California, to consider the current and prospective conditions of supply and demand and recommended a quantity of navels deemed advisable to be handled during the specified week. The committee reports the demand for navel oranges is good.

It is further found that there is insufficient time between the date when information became available upon which this regulation is based and when the action must be taken to warrant a 60-day comment period as recommended in E.O. 12044, and that it is impracticable and contrary to the public interest to give preliminary notice, engage in public rulemaking, and postpone the effective date until 30 days after publication in the Federal Register (5 U.S.C. 553). It is necessary to effectuate the declared purposes of the act to make these regulatory provisions effective as specified, and handlers have been apprised of such provisions and the effective time.

1. Section 907.798 is added as follows:

§ 907.798 Navel Orange Regulation 498.

Order. (a) The quantities of navel oranges grown in Arizona and California which may be handled during the period November 28, 1980, through December 4, 1980, are established as follows:

(1) District 1: 1,213,308 cartons;
(2) District 2: unlimited cartons;
(3) District 3: 121,003 cartons;
(4) District 4: 4,002 cartons.

(b) As used in this section, "handled," "District 1," "District 2," "District 3," "District 4," and "carton" mean the same as defined in the marketing order.

(Secs. 1-19, 48 Stat. 31, as amended; 7 U.S.C. 601-674)

Dated: November 25, 1980.

D. S. Kuryloski,

Deputy Director, Fruit and Vegetable Division, Agricultural Marketing Service.

[FR Doc. 80-37254 Filed 11-26-80; 8:45 am]

BILLING CODE 3410-02-M

---

7 CFR Part 910

[Lemon Regulation 281]

Lemons Grown in California and Arizona; Limitation of Handling

AGENCY: Agricultural Marketing Service, USDA.

ACTION: Final rule.

SUMMARY: This regulation establishes the quantity of fresh California-Arizona lemons that may be shipped to market during the period November 30-December 6, 1980. Such action is needed to provide for orderly marketing of fresh lemons for this period due to the marketing situation confronting the lemon industry.

EFFECTIVE DATE: November 30, 1980.

FOR FURTHER INFORMATION CONTACT: Malvin E. McGaha, 202-447-5975.

SUPPLEMENTARY INFORMATION: *Findings.* This regulation is issued under the marketing agreement, as amended, and Order No. 910, as amended (7 CFR Part 910), regulating the handling of lemons grown in California and Arizona. The agreement and order are effective under the Agricultural Marketing Agreement Act of 1937, as amended (7 U.S.C. 601-674). The action is based upon the recommendations and information submitted by the Lemon Administrative Committee, and upon other information. It is hereby found that this action will tend to effectuate the declared policy of the act.

This action is consistent with the marketing policy for 1980-81 which was designated significant under the procedures of Executive Order 12044. The marketing policy was recommended by the committee following discussion at a public meeting on July 8, 1980. A final impact analysis on the marketing policy is available from Malvin E. McGaha, Chief, Fruit Branch, F&V, AMS, USDA, Washington, D.C. 20250, telephone 202-447-5975.

The committee met again publicly on November 24, 1980, at Los Angeles, California, to consider the current and prospective conditions of supply and demand and recommended a quantity of lemons deemed advisable to be handled during the specified week. The committee reports the demand for lemons is good.

It is further found that there is insufficient time between the date when information became available upon which this regulation is based and when the action must be taken to warrant a 60 day comment period as recommended in E.O. 12044, and that it is impracticable and contrary to the public interest to give preliminary notice, engage in public rulemaking, and postpone the effective date until 30 days after publication in the Federal Register (5 U.S.C. 553). It is necessary to effectuate the declared purposes of the act to make these regulatory provisions effective as specified, and handlers have been apprised of such provisions and the effective time.

Section 910.581 is added as follows:

§ 910.581 Lemon Regulation 281.

(a) The quantity of lemons grown in California and Arizona which may be handled during the period November 30, 1980, through December 6, 1980, is established at 225,000 cartons.

(b) As used in this section, "handled" and "carton(s)" mean the same as defined in the marketing order.

(Secs. 1-19, 48 Stat. 31, as amended; 7 U.S.C. 601-674)

Dated: November 26, 1980.

D. S. Kuryloski,

Deputy Director, Fruit and Vegetable Division, Agricultural Marketing Service.

[FR Doc. 80-37364 Filed 11-26-80; 2:29 pm]

BILLING CODE 3410-02-M

---

7 CFR Part 971

Lettuce Grown in Lower Rio Grande Valley in South Texas; Handling Regulation

AGENCY: Agricultural Marketing Service, USDA.

ACTION: Final rule.

SUMMARY: This regulation will impose container, pack, and inspection requirements on shipments of lettuce grown in the Lower Rio Grande Valley in South Texas. Standardizing trading practices will improve marketing efficiency, promote orderly marketing of such lettuce, and help provide better

quality lettuce at reasonable prices to consumers.

EFFECTIVE DATE: December 1, 1980.

FOR FURTHER INFORMATION CONTACT: Charles W. Porter, Chief, Vegetable Branch, F&V, AMS, USDA, Washington, D.C. 20250 (202) 447-2615. The Final Impact Analysis relating to this final rule is available upon request from Mr. Porter.

SUPPLEMENTARY INFORMATION: This action has been reviewed under USDA procedures established in Secretary's Memorandum 1955 to implement Executive Order 12044, and has been classified "not significant."

Marketing Agreement No. 144 and Marketing Order No. 971 regulate the handling of lettuce grown in the Lower Rio Grande Valley in South Texas. This program is effective under the Agricultural Marketing Agreement Act of 1937, as amended (7 U.S.C. 601-674). The South Texas Lettuce Committee, established under the order, is responsible for its local administration.

Notice was published in the November 5 Federal Register (45 FR 73498) regarding the proposal. It afforded interested persons an opportunity to file written comments by November 20, 1980. None was filed.

This regulation is based upon the recommendations made by the committee at its public meeting in McAllen, Texas, on October 21, 1980.

These container and pack requirements are in accord with the generally accepted commercial practices of the South Texas lettuce industry of packing specified numbers of heads of lettuce in specific sized containers limited to those found acceptable to the trade for safe transportation of the lettuce, and will prevent deceptive practices.

In addition the South Texas lettuce industry is accustomed to operating on a six day shipping week. A six day shipping week has proven adequate for five days distribution in terminal markets, therefore "packaging holidays" on Sundays will promote more efficient and orderly marketing. However, handlers will be permitted, with the approval of the committee, to package lettuce on Sunday and on Christmas day whenever the committee finds that distribution is inadequate, or that crop damage is imminent.

No purpose would be served by regulating the containers or pack or requiring the inspection and assessment of insignificant quantities of lettuce. Therefore, each person is exempt from such requirements for up to two cartons—or the equivalent—of lettuce per day.

Provisions with respect to special purpose shipments, including export, are designed to meet the different requirements for export and noncommercial domestic trade. Because of the production area's proximity to the Mexican border, Mexican buyers have been accustomed to acquiring small lots of production area lettuce for their home market. These buyers use lettuce which fails to meet the pack and container requirements. Inasmuch as such shipments have a negligible effect on the domestic market, they should be permitted if certain safeguard requirements are met.

After consideration of all relevant matters, including the proposal set forth in the notice, it is found that the handling regulation will tend to effectuate the declared policy of the act.

It is further found that good cause exists for not postponing the effective date of this section 30 days after its publication in the Federal Register (5 U.S.C. 553) in that: (1) Shipments of lettuce grown in the production area are expected to begin about the effective date specified in this regulation, (2) to maximize benefits to producers this effective period should be set to cover as many shipments as possible during the shipping season, (3) information regarding the provisions of this regulation has been made available to producers and handlers in the production area, and (4) compliance with this regulation will not require any special preparation on the part of persons subject to it which cannot be completed by the effective date.

§ 971.320 [Deleted]

Section 971.320 (44 FR 65964, November 16, 1979; 45 FR 10, January 2, 1980) is hereby deleted and a new § 971.321 is added as follows:

§ 971.321 Handling regulation.

During the period December 1, 1980, through March 31, 1981, no person shall handle any lot of lettuce grown in the production area unless such lettuce meets the requirements of paragraphs (a), (b) and (c) of this section, or unless such lettuce is handled in accordance with paragraphs (d) or (e) of this section. Further, no person may package lettuce during the above period on any Sunday, or on Christmas Day, unless approved in accordance with paragraph (f).

(a) *Containers.* Containers may be only the following depth, width and length respectively:

(1) Cartons with inside dimensions of 10 inches x 14¼ inches x 21$^{5}/_{16}$ inches (designated as carrier container No. 7303), or

(2) Cartons with inside dimensions of 9¾ inches x 14 inches x 21 inches (designated as carrier container No. 7306), or

(3) Cartons with inside dimensions of 14 inches x 9¾ inches x 21 inches (designated as carrier container No. 7313), or

(4) Cartons with inside dimensions of 10¾ inches x 16⅛ inches x 21½ inches (designated as carrier container No. 7312—flat pack).

(b) *Pack.* (1) Lettuce heads, packed in containers No. 7303, 7306, or 7313; if wrapped may be packed only 18, 20, 22, 24, or 30 heads per container; if not wrapped, only 18, 24, or 30 heads per container.

(2) Lettuce heads in container No. 7312 may be packed only 24 or 30 heads per container.

(c) *Inspection.* (1) no handler shall handle lettuce unless such lettuce is inspected by the Texas-Federal Inspection Service and an appropriate inspection certificate has been issued for it, except when relieved of such requirement by paragraphs (d) or (e) of this section.

(2) No handler may transport by motor vehicle, or cause such transportation of, any shipment of lettuce for which inspection is required unless each such shipment is accompanied by a copy of an appropriate inspection certificate or shipment release form (SPI-23) furnished by the Inspection Service verifying that such shipment meets the pack and container requirements of this section. A copy of such inspection certificate or shipment release form shall be available and surrendered upon request to authorities designated by the committee.

(3) For administration of this part, such inspection certificate or shipment release form required by the committee as evidence of inspection is valid for only 72 hours following completion of inspection, as shown on such certificate or form.

(d) *Minimum quantity.* Any person may handle up to, but not to exceed two cartons or the eqivalent of lettuce a day without regard to inspection, assessment, container and pack requirements. This exception shall not be applied to any shipment of over two cartons of lettuce.

(e) *Special purpose shipments.* The container, pack, and inspection requirements of this section shall not be applicable to shipments as follows:

(1) For relief, charity, experimental purpose, or export to Mexico, if a handler presents a Certificate of Privilege for such lettuce prior to handling it, pursuant to §§ 971.120-971.125; and

(2) For export to Mexico, if the handler of such lettuce loads and transports it in a vehicle bearing Mexican registration (license).

(f) *Suspension of packing holidays.* Upon approval of the committee, the prohibition against packing lettuce on Christmas or on any Sunday may be modified or suspended to permit the handling of lettuce provided such handling complies with the procedures and safeguards specified by the committee.

(g) *Definitions.* (1) "Wrapped" heads of lettuce refers to those which are enclosed individually in parchment, plastic, or other commercial film and then packed in cartons or other containers.

(2) Other terms used in this section have the same meaning as when used in Marketing Agreement No. 144 and this part.

(Secs. 1–19, 48 Stat. 31, as amended; 7 U.S.C. 601–674)

Dated November 24, 1980 to become effective December 1, 1980.

D. S. Kuryloski

Deputy Director, Fruit and Vegetable Division, Agricultural Marketing Service.

[FR Doc. 80-37113 Filed 11-26-80; 8:45 am]

BILLING CODE 3410-02-M

---

7 CFR Part 991

Hops of Domestic Production; Amendment of Administrative Rules and Regulations—Reserve Hops

AGENCY: Agricultural Marketing Service, USDA.

ACTION: Emergency final rule.

SUMMARY: This rule changes the date (1) certain hops from the 1980 production become reserve hops, from November 1, 1980, to December 1, 1980, and (2) such hops must be identified as reserve hops, from November 15, 1980, to December 8, 1980. This change was unanimously recommended by the Hop Administrative Committee, which works with USDA in administering the Federal marketing order for hops of domestic production.

EFFECTIVE DATES: November 28, 1980.

FOR FURTHER INFORMATION CONTACT: J. S. Miller, Chief, Specialty Crops Branch, Fruit and Vegetable Division, AMS, USDA, Washington, D.C. 20250 (202) 447–5053.

SUPPLEMENTARY INFORMATION: This emergency final action has been reviewed under USDA procedures established in Secretary's Memorandum 1955 to implement Executive Order 12044 and has been classified "non-significant." Mr. Miller determined that an emergency situation exists which warrants publication without opportunity for a public comment period on this emergency final action because the November 1 and November 15 deadlines have already passed, and there is no time for response. Adjustment of these deadlines also would afford additional time for producers to fill deficits in their annual allotments, and handlers to comply with the identification requirements.

Further, pursuant to the administrative procedure provisions in 5 U.S.C. 553, it is found upon good cause that notice and other public procedure with respect to this emergency final action are impracticable and contrary to the public interest; and good cause is found for making this emergency final action effective less than 30 days after publication of this document in the Federal Register.

This action is pursuant to Marketing Order No. 991, as amended, regulating the handling of hops of domestic production. The order is effective under the Agricultural Marketing Agreement Act of 1937, as amended (7 U.S.C. 601–674).

Section 991.39 provides, in part, that hops baled, packaged, processed, or otherwise prepared for market that are in excess of an effective individual producer annual allotment or total of such allotments to members of a cooperative marketing association and are held by any producer-handler or association on November 1, or such other date as the Committee may prescribe, shall be reserve hops. Section 991.32 prescribes inspection and identification requirements for hops received for reserve handling, and provides, in part, that inspection and identification shall be completed prior to November 15 or other date established pursuant to § 991.39. Pursuant to this authority, § 991.132 prescribes such identification requirements and provides for identification to be completed prior to November 15 or such other date established pursuant to § 991.39.

The Committee recommended that the date on which excess hops from the 1980 production become reserve be changed to December 1, 1980, but only for the current 1980–81 marketing year, and that identification of these reserve hops be completed by December 8, 1980. The purpose of this change is to enable producers who produced less than their annual allotments during the current 1980–81 marketing year to fill any deficit in their annual allotments, as authorized in § 991.38(e), by acquiring hops from other producers that are in excess of such producers' annual allotments before these excess hops become reserve hops pursuant to § 991.39. Moreover, the 1980 hop crop was of record production, and it is anticipated that growers will experience delays in completing the filling of deficiencies as a result.

Therefore, a new § 991.139 is added to Subpart—Administrative Rules and Regulations (7 CFR 991.130–991.160) providing that, for the 1980–81 marketing year, excess hops become reserve hops on December 1. In addition, the introduction and paragraph (a) of § 991.132 are revised by inserting a proviso that, for the 1980–81 marketing year, reserve hops should be identified, as prescribed in that section, prior to December 8, 1980.

After consideration of all relevant matter presented, including the information and recommendation submitted by the Committee, and other information, it is further found that amendment of Subpart—Administrative Rules and Regulations (7 CFR 991.130–991.160) would tend to effectuate the declared policy of the act.

The amendment follows:

1. Amend § 991.132 by revising the undesignated introductory paragraph and paragraph (a) to read as follows:

§ 991.132 Identification of reserve hops.

As provided in §§ 991.32 and 991.39, identification of reserve hops shall be completed prior to November 15 or such other date established pursuant to § 991.39: *Provided,* That, for the 1980–81 marketing year, identification of reserve hops shall be completed prior to December 8, 1980. Also, prescribed reports are required with respect to reserve hops held and not delivered by the closing date for pooling.

(a) Any hops which become reserve hops pursuant to § 991.39 shall, prior to November 15 of the year of production or such other date as may be established pursuant to § 991.39, be identified by such devices and in such manner as the Committee finds necessary to maintain surveillance over such hops to assure disposition thereof in accordance with this part and to prevent their unauthorized use in outlets for salable hops: *Provided,* That for the 1980–81 marketing year, such identification shall be completed prior to December 8, 1980.

* * * * *

2. A new § 991.139 is added reading as follows:

§ 991.139 Reserve hops.

Pursuant to § 991.39, hops baled, packaged, processed, or otherwise prepared for market that are in excess of an effective individual producer annual allotment or the total of such allotments

to members of a cooperative marketing association for the 1980–81 marketing year, and are held by any producer-handler or association on December 1, 1980, shall be reserve hops.

[Secs. 1–19, 48 stat. 31, as amended; 7 U.S.C. 601–674]

Dated: November 21, 1980, to become effective November 28, 1980.

D. S. Kuryloski,

Deputy Director, Fruit and Vegetable Division, Agricultural Marketing Service.

[FR Doc. 80-37111 Filed 11-26-80; 8:45 am]

BILLING CODE 3410-02-M

Commodity Credit Corporation

7 CFR Part 1434

1980-Crop Honey Loan and Purchase Program

AGENCY: Commodity Credit Corporation, USDA.

ACTION: Final rule.

SUMMARY: The purpose of this rule is to set forth the (1) final loan and purchase availability dates, (2) maturity dates, and (3) loan and purchase rates, and (4) premiums and discounts under which Commodity Credit Corporation (CCC) will extend price support on 1980-crop honey. The need for this rule is to satisfy statutory requirements of section 201 of the Agricultural Act of 1949, which provides that price support shall be available on honey. This final rule will enable eligible producers to obtain loans and purchases on their eligible 1980-crop honey.

EFFECTIVE DATE: November 26, 1980.

ADDRESS: Price Support and Loan Division, ASCS, USDA, P.O. Box 2415, Washington, D.C., 20013.

FOR FURTHER INFORMATION CONTACT: W. W. Beesley ASCS, (202) 447–7923. The final impact statement describing the options in developing this final rule and the impact of implementing each option is available on request from Harry A. Sullivan, Agricultural Program Specialist, Production Adjustment Division, ASCS–USDA, P.O. Box 2415, Washington, D.C., 20013, (202) 447–7951.

SUPPLEMENTARY INFORMATION: This final action has been reviewed under USDA procedures established in Secretary's Memorandum 1955 to implement Executive Order 12044, and has been classified "not significant." Also in compliance with Secretary's Memorandum No. 1955 and "Improving USDA Regulations" (43 FR 50988), initiation of review of the regulations contained in 7 CFR 1421.40–44 for need, accuracy, clarity, and effectiveness will be made within the next five years. The next review will take into consideration problems, issues, etc., which are experienced in program administration during the intervening period.

The title and number of the Federal assistance program that this notice applies to is: Title-Commodity Loans and Purchases; Number—10.051; as found in the Catalog of Federal Assistance.

This action will not have a significant impact specifically on area and community development. Therefore, review as established by OMB Circular A–95, was not used to assure that units of local government are informed of this action.

On February 14, 1980, a notice of proposed rulemaking was published in the Federal Register (45 FR 9943) regarding certain determinations for the 1980 crop of honey. Such determinations included price support rates based on color, differentials, class, grade, and the program availability period. Three responses were received. All commented that the program has been beneficial to program users. Three specific recommendations were made: (1) That the support level not be set above the price level that would result from general market conditions for honey, (2) that the maturity date be extended 90 to 120 days beyond the present June 30 date, and (3) that the 60 percent of parity would be adequate to protect beekeepers' incomes.

After considering the responses, statutory considerations, and other factors, it was determined that the price support rate would be established at the legal statutory minimum of 60 percent of parity and that the maturity date would remain June 30, the same as last year. The determination on the support level would provide adequate income protection to the producer and provide for an orderly market. The determination of the June 30 maturity date woud provide adequate time for beekeepers to market their 1980-crop honey. The loan and purchase rate for 1980-crop honey of 50.3 cents per pound was announced April 16, 1980.

Final Rule

The Honey Price Support Regulations for the 1977 and Subsequent Crops which contain regulations of a general nature with respect to loan and purchase operations are supplemented for the 1980 crop of honey as stated herein. The title of the subpart and regulations at §§ 1434.40 through 1434.44 are revised to read as follows, effective as to 1980-crop honey. The material previously appearing in these sections remains in full force and effect as to the crops to which it was applicable.

PART 1434—HONEY

* * * * *

Subpart—1980-Crop Honey Loan and Purchase Program

Sec.

1434.40 Purpose.
1434.41 Availability.
1434.42 Maturity of loans.
1434.43 Loan and purchase rates.
1434.44 Discounts.

Authority: Secs. 4 and 5, 62 Stat. 1070, 1072, as amended. (15 U.S.C. 714 b and c); Secs. 201, 401, 63 Stat. 1052, 1054 (7 U.S.C. 1446, 1421).

Subpart—1980-Crop Honey Loan and Purchase Program

§ 1434.40 Purpose.

This subpart contains program provisions which, together with (a) the Honey Price Support Regulations for 1977 and Subsequent Crops, (b) the Cooperative Marketing Association Eligibility Requirements for Price Support in Part 1425 of this chapter, and (c) any amendments to such regulations, set forth the requirements with respect to loans and purchases for 1980-crop honey.

§ 1434.41 Availability.

(a) *Loans.* Producers must request a loan on eligible 1980-crop honey on or before March 31, 1981.

(b) *Purchases.* Producers desiring to offer eligible honey not under loan for purchase must complete a purchase agreement (Form CCC–614) at the county ASCS office on or before June 30, 1981.

§ 1434.42 Maturity of loans.

Unless demand is made earlier, loans on honey will mature on June 30, 1981.

§ 1434.43 Loan and purchase rates.

(a) *Table and nontable honey.* The rate for the quantity of 1980-crop honey placed under loan or acquired under loan or purchase shall be the rate for the respective class and color set forth below:

Class and Color	
Table Honey:	
1 White and lighter	51.1
2 Extra light amber	50.1
3 Light amber	49.1
4 Other table honey	47.1
Nontable honey	47.1

(b) *Objectionable flavor, fermentation, or caramelization.* The settlement value for a lot of honey delivered under loan or for purchase which grades substandard on account of objectional flavor, fermentation, or caramelization shall be the lower of its market value as determined by CCC or a value determined on the basis of the

loan and purchase rate for nontable honey.

(c) *Grade not certified.* The settlement value for a lot of honey, delivered under loan or for purchase, on which the grade cannot be certified shall be the lower of its market value as determined by CCC or a value as determined on the basis of the loan and purchase rate for nontable honey.

(d) *Substandard.* The rate for a lot of honey delivered under a loan or for purchase which grades substandard on account of defects or moisture or a combination of defects and moisture shall be adjusted by the discounts in § 1434.44.

§ 1434.44 Discounts.

(a) *Defects.* The loan and purchase rate for a lot of honey delivered under a loan or for purchase which grades substandard on account of defects shall be adjusted by the following discount:

	Discount (cts per lb)
Substandard on account of defects	2

(b) *Moisture.* The loan and purchase rate for a lot of honey delivered under a loan or for purchase which contains moisture in excess of 18.5 percent shall be adjusted by the following discounts which shall be in addition to the discount for defects:

	Discount (cts per lb)
Moisture percent:	
18.5	0.0
19.0	.5
19.5	1.0
20.0	1.5
20.5	2.0
21.0	2.5
21.5	3.0
22.0	3.5
22.5	4.0
23.0	4.5
23.5	5.0
24.0	5.5
24.5	6.0

(c) *Commingled storage.* The loan and purchase rate for a lot of honey tendered for loan or purchase by CCC while stored commingled in a warehouse, or delivered to a warehouse in bulk in satisfaction of a farm storage loan, shall be adjusted by the following discount:

	Discount (cts per lb)
Bulk Commingled	1.5

Signed at Washington, D.C., on November 21, 1980.

Bill Cherry,

Acting Executive Vice President, Commodity Credit Corporation.

[FR Doc. 80-37109 Filed 11-26-80; 8:45 am]

BILLING CODE 3410-05-M

7 CFR Part 1464

Tobacco Loan Program; 1980 Crop Grade Loan Rates

AGENCY: Commodity Credit Corporation.

ACTION: Final rule.

SUMMARY: This rule sets forth the schedule of loan rates applicable to the various grades of 1980-crop Ohio Filler tobacco, types 42–44; Connecticut Valley broadleaf tobacco, type 51; Connecticut Valley Havana seed tobacco, type 52; New York and Pennsylvania Havana seed tobacco, type 53; Southern Wisconsin tobacco, type 54, Northern Wisconsin, type 55, and Puerto Rican tobacco, type 46. These rates will provide the level of support required by the Agricultural Act of 1949, as amended. Eligible tobacco can be delivered for price support at the specified rates.

EFFECTIVE DATE: November 26, 1980.

ADDRESS: U.S. Department of Agriculture, Price Support and Loan Division, ASCS, P.O. Box 2415, Washington, D.C. 20013.

FOR FURTHER INFORMATION CONTACT: Betty A. Lucas ASCS, (202) 447-6733. The Final Impact Statement considered in developing this final rule is available on request from Robert L. Tarczy, Price Support and Loan Division (ASCS), Room 3754 South Building, P.O. Box 2415, Washington, D.C. 20013, (202) 447-6733.

SUPPLEMENTARY INFORMATION: This final action has been reviewed under USDA procedures established in Secretary's Memorandum 1955 to implement Executive Order 12044 and has been classified "not significant."

In compliance with Secretary's Memorandum No. 1955 and "Improving USDA Regulations" (45 FR 50988), initiation of review of these regulations contained in 7 CFR 1464.22, 1464.23, 1464.24, 1464.25, 1464.26, and 1464.27 for need, currency, clarity, and effectiveness is planned for the period August-October 1981.

The title and number of the Federal Assistance Program that the Final Rule applies to is: Title—Commodity Loans and Purchases; Number—10.051. This action will not have a significant impact on area and community development. Therefore, review as established by OMB Circular A-95 was not used to assure that units of local government are informed of this action.

In accordance with the provisions of Section 106 of the Agricultural Act of 1949, as amended ("the Act"), the 1980 crops of Ohio Filler, types 42–44, New York and Pennsylvania Havana seed, type 53, Southern Wisconsin, type 54, and Northern Wisconsin, type 55, tobaccos are required to be supported at 72.9 cents per pound, and Puerto Rican tobacco, type 46 is required to be supported at 75.7 cents per pound, and Connecticut Valley broadleaf, type 51, and Connecticut Valley Havana seed tobacco, type 52, tobaccos are required to be supported at 101.0 cents per pound. It is expected that price support will be provided through loans to a producer cooperative marketing association which will receive eligible tobacco from producers and make price support advances to the producers through auction warehouses. The tobacco received will serve as collateral for the loan. Price support advances will be based on the loan rates for each grade. These loan rates average the required level of support when weighted by the anticipated grade percentages as authorized by Section 403 of the Act. Price support advances to producers will be the amounts determined by multiplying the pounds of each grade received by the applicable loan rate for that grade less one cent per pound which the producers' associations are authorized to deduct and to apply against overhead costs.

This regulation contains loan rates for individual grades of cigar-binder, type 51 and 52 and cigar-filler and binder, types 42–44, 53–55, Puerto Rican, type 46 tobacco, needed to implement the national average loan rates for such tobaccos which were announced on September 25, 1980.

Final Rule

Accordingly, 7 CFR Part 1464 is amended by revising §§ 1464.22 through 1464.27 to read as follows effective for the 1980 crops:

§ 1464.22 1980 Crop—Ohio Filler Tobacco, Types 42-44, Loan Schedule [1]

[Dollars per 100 lbs, farm sales weight]

Grade	Loan rate
Crop run (stripped together):	
X1	79
X2	72
X3	66
X4	60
Nondescript: N	51
Nonbinder X1	36

§ 1464.23 1980 Crop—Connecticut Valley Broadleaf Tobacco, Type 51, Loan Schedule [2]

[Dollars per 100 lbs, farm sales weight]

Grade	Loan rate
Binders:	
B1	128
B2	118
B3	105
B4	95
B5	83
Nonbinders: X1	69

§ 1464.24 1980 Crop—Connecticut Valley Havana Seed Tobacco, Type 52—Loan Schedule [2]

[Dollars per 100 lbs, farm sales weight]

Grade	Loan rate
Binders:	
B1	124
B2	116
B3	103
B4	94
B5	83
Nonbinder: X1	69

§ 1464.25 1980 Crop—New York and Pennsylvania Havana Seed Tobacco, Type 53, and Southern Wisconsin Tobacco, Type 54—Loan Schedule [1]

[Dollars per 100 lbs, farm sales weight]

Grade	Loan rate
Crop run:	
X1	80
X2	74
X3	67
Farm fillers:	
Y1	58
Y2	56
Y3	54
Nondescript:	
N1	52
N2	46

[1] Tobacco is eligible for loan only if consigned by the original producer. No loan is authorized for tobacco graded "N1" or "N2" (nondescript) or "S" (scrap) or designated "No-G" (no grade). The cooperative association through which price support is made available is authorized to deduct from the amount paid the grower $1 per hundred pounds to apply against overhead and receiving costs.

[2] Tobacco is eligible for loan only if consigned by the original producer. No loan is authorized for tobacco graded "S" (scrap) or designated "No-G" (no grade). The cooperative association through which price support is made available is authorized to deduct from the amount paid the growers $1 per hundred pounds to apply against overhead and receiving costs.

§ 1464.26 1980 Crop—Northern Wisconsin Tobacco, Type 55, Loan Schedule [1]

[Dollars per 100 lbs, farm sales weight]

Grade	Loan rate
Binders:	
B1	101.0
B2	91.5
B3	84.5
Strippers:	
C1	80.5
C2	74.0
C3	69.0
Crop run:	
X1	79.5
X2	73.0
X3	68.0
Farm fillers:	
Y1	56.0
Y2	54.0
Y3	49.0
Nondescript:	
N1	47.0
N2	43.0

§ 1464.27 1980 Crop—Puerto Rican Tobacco, Type 46, Loan Schedule [1]

[Dollars per 100 lbs, farm sales weight]

Grade	Loan rate
Price Block I (C1F and C1P)	82.50
Price Block II (X1F, X1P, and X1S)	75.50
Price Block III (X2T, X2F, X2P, and X2S)	65.50
Price Block IV (N)	27.00

(Secs. 4 and 5, 62 Stat. 1070, as amended (15 U.S.C. 714(b), 714(c)); secs. 101, 106, 401, 403, 63 Stat. 1051, as amended, 1054, 74 Stat. 6 (7 U.S.C. 1441, 1445, 1421, 1423))

Signed at Washington, D.C. on November 21, 1980.

Bill Cherry,

Acting Executive Vice President, Commodity Credit Corporation.

[FR Doc. 80-37198 Filed 11-26-80; 8:45 am]

BILLING CODE 3410-05-M

DEPARTMENT OF TRANSPORTATION

Federal Aviation Administration

14 CFR Part 21

[Docket No. 16382; Amdt. No. 21-52A]

Operating Limitations and Related Requirements for Certain Propeller-Driven Small Airplanes Designed for Agricultural Aircraft Operations or Fire Fighting Purposes; Correction

AGENCY: Federal Aviation Administration (FAA) DOT.

ACTION: Final rule: Correction.

SUMMARY: On October 9, 1980, the FAA published its final rule prescribing requirements relating to certification and operation of certain propeller-driven, small airplanes designed for agricultural aircraft operations or fire-fighting purposes (45 FR 67064). That action included an amendment to § 21.115(a), as discussed in the preamble. However, on 45 FR 67066 in the statement of Amendment No. 2, it inadvertently indicated that paragraph (c) of § 21.115 was being amended rather than paragraph (a). Efforts to correct that error before it was published were not successful. Accordingly, this action makes the necessary correction, effective November 10, 1980, the effective date of the final rule.

EFFECTIVE DATE: November 10, 1980.

FOR FURTHER INFORMATION CONTACT: Mr. Richard N. Tedrick, Noise Policy and Regulatory Branch (AEE-110), Noise Abatement Division, Office of Environment and Energy, Federal Aviation Administration, 800 Independence Ave., SW., Washington, DC 20591; telephone (202) 755-9027.

SUPPLEMENTARY INFORMATION: Since this amendment to the final rule is corrective in nature to reflect the intended amendment as discussed in the preamble to the final rule, I find that further notice and public procedure thereon is unnecessary and that good cause exists for making it effective in less than 30 days after its publication in the Federal Register.

Adoption of the Amendment

Accordingly, § 21.115(a) of the Federal Aviation Regulations (14 CFR 21.115(a)) is amended effective November 10, 1980, by deleting the words "§ 36.7" and substituting for them the words "§§ 36.7 and 36.9."

(Secs. 307(c), 313(a), 601(a), and 611(b), Federal Aviation Act of 1958, as amended (49 U.S.C. 1348(c), 1354(a), 1421, and 1431(b)); Sec. 6(c), Department of Transportation Act (49 U.S.C. § 1655(c)); Title I, National Environmental Policy Act of 1969 (42 U.S.C. 4321, et seq.); and Executive Order 11514, March 5, 1970)

Note.—The FAA has determined that this document involves a regulation which is not significant under Executive Order 12044, as implemented by DOT Regulatory Policies and Procedures (44 FR 11034; February 26, 1979). Since this regulatory action involves amendments that are corrective and editorial in nature and do not modify the substance of the regulation contemplated under the final rule, the anticipated impact is so minimal that it does not warrant preparation of a regulatory evaluation.

Issued in Washington, DC, on November 20, 1980.

Langhorne Bond,

Administrator.

[FR Doc. 80-37063 Filed 11-26-80; 8:45 am]

BILLING CODE 4910-13-M

---

14 CFR Part 39

[Docket No. 80-NW-39-AD, Amdt. 39-3982]

Airworthiness Directives; Boeing Model 747 Series Airplanes Equipped with B. F. Goodrich Off-wing Slides

AGENCY: Federal Aviation Administration (FAA), DOT.

ACTION: Final rule.

SUMMARY: This Airworthiness Directive (AD) requires the replacement of escape slide bayonet/spring mechanical restraints with shear pin mechanical restraints in certain B. F. Goodrich off-wing escape slides. Replacement is necessary due to corrosion of the bayonet/spring type restraint, possibly causing failure of the escape slide to function during an emergency evacuation.

DATE: Effective date January 2, 1981.

ADDRESSES: The service bulletins specified in this directive may be obtained upon request to Boeing Commercial Airplane Company, P.O. Box 3707, Seattle, Washington 98124. These documents may be examined at FAA Northwest Region, 9010 East Marginal Way South, Seattle, Washington 98108.

FOR FURTHER INFORMATION CONTACT: Mr. Roger S. Young, Airframe Branch, ANW-120S, Seattle Area Aircraft Certification Office, FAA Northwest Region, 9010 East Marginal Way South, Seattle, Washington 98108, telephone (206) 767-2516.

History

One escape slide failed during a deployment due to corrosion on the bayonet/spring type mechanical restraint. A survey of the operators reveal some corrosion on the off-wing slide restraints.

The bayonet/spring restraints were required to be installed on some of these escape slides by AD 70-26-01. This action takes precedence over the requirements of the previous AD for the off-wing slides and this installation is considered an equivalent modification to the bayonet/spring restraints required by that AD.

Public Participation

This amendment is based on a Notice of Proposed Rule Making (NPRM) (45 FR 54072, August 14, 1980). All interested persons have been given an opportunity to participate in the rulemaking of the amendment and due consideration has been given to all matters presented. Three comments were received.

Discussion of Comments

One commenter stated that aside from the one failure, only light corrosion on a few off-wing mechanical restraints has been found. The commenter recommended retrofit of the fleet, but that no AD action be taken to require replacement of all mechanical restraints; however, if AD action is taken, it was recommended that interior mounted slides be excluded.

The FAA has received no reports of corrosion on interior mounted slides and believes that the corrosion problem is limited to the offwing slides. The proposed rule, therefore, has been changed to exclude interior mounted slides.

Another commenter stated that most operators have their slides on a three year overhaul schedule and a shorter compliance time would result in excessive expenditures, and that based on the service history, the modification could be accomplished at the next scheduled overhaul without compromising safety.

The FAA, after reconsideration, concurs that the compliance time may be extended. As stated earlier, the corrosion problem does not affect interior mounted escape slides and further, a survey of the operators shows a smaller number of corroded parts than originally thought. Accordingly, the proposal is modified to extend the final compliance date from one to three years.

The third commenter would like to be "assured" that no escape slide failures would be caused by this problem between now and the final compliance time; otherwise, it was recommended that the compliance time be revised downward.

The FAA cannot "guarantee" there will be no more escape slide failures. However, consideration of the data with respect to the scope of the problem and service history does not justify establishing a compliance time which is unnecessarily short or which would create an undue economic burden to the operators involved. On the other hand, modification is necessary and is mandated. The revised schedule will eliminate the safety problem, without unnecessarily penalizing the operators.

Adoption of the Amendment

Accordingly, pursuant to the authority delegated to me by the Administrator, § 39.13 of the Federal Aviation Regulations (14 CFR 39.13) is amended by adding the following new Airworthiness Directive:

Boeing: Applies to all Model 747 airplanes equipped with B. F. Goodrich off-wing slides:

A. Within three (3) years after the effective date of this AD, unless already accomplished, install shear pin mechanical restraints to affected off-wing escape slides in accordance with B. F. Goodrich Service Bulletin 25-054 dated March 4, 1980, or later FAA approved revisions, or in a manner approved by the Chief, Seattle Area Aircraft Certification Office, FAA Northwest Region.

B. Upon request of the operator, an FAA maintenance inspector, subject to prior approval by the Chief, Seattle Area Aircraft Certification Office, FAA Northwest Region, may adjust the compliance date if the request contains substantiating data to justify the change.

Note.—This installation is considered an equivalent modification to the bayonet/spring restraints required by Amendment 39-1128 (35 FR 19170) AD 70-26-01.

(Secs. 313(a), 601, and 603, Federal Aviation Act of 1958, as amended (49 U.S.C. 1354(a), 1421, and 1423); Sec. 6(c), Department of Transportation Act (49 U.S.C. 1655(c)); and 14 CFR 11.89).

Note.—The FAA has determined that this document involves a regulation which is not considered to be significant under the provisions of Executive Order 12044, as implemented by Department of Transportation Regulatory Policies and Procedures (44 FR 11034; February 26, 1979).

Issued in Seattle, Washington, on November 18, 1980.

Charles R. Foster,

Director, Northwest Region.

The incorporation by reference provisions in the document were approved by the Director of the Federal Register on June 19, 1967.

[FR Doc. 80-36832 Filed 11-26-80; 8:45 am]

BILLING CODE 4910-13-M

14 CFR Part 39

[Docket No. 80-WE-54-AD; Amdt. 39-3980]

Airworthiness Directives; Hughes Helicopters Model 369 Series Helicopters

AGENCY: Federal Aviation Administration (FAA), DOT.

ACTION: Final rule.

SUMMARY: This amendment adopts a new Airworthiness Directive (AD) which requires removal from service of certain Bendix tail rotor drive shaft couplings on Hughes Helicopters Model 369 Series Helicopters. The AD is prompted by a report that Hughes has been unable to retrieve eleven (11) out of seventy-four (74) couplings which were improperly processed. These couplings have a greatly reduced service life which could result in fatigue failure of the tail rotor drive shaft coupling and loss of power to the tail rotor.

DATES: Effective within 25 hours' time in service from the effective date of this AD, unless already accomplished.

ADDRESSES: The applicable service information may be obtained from: Hughes Helicopters, Division of Summa Corporation, Centinela and Teale Streets, Culver City, California 90230.

Also, a copy of the service information may be reviewed at, or a copy obtained from: Rules Docket in Room 916, FAA, 800 Independence Avenue, S.W., Washington, D.C. 20591, or Rules Docket in Room 6W14, FAA Western Region, 15000 Aviation Boulevard, Hawthorne, California 90261.

FOR FURTHER INFORMATION CONTACT: Robert T Razzeto, Executive Secretary, Airworthiness Directive Review Board, Federal Aviation Administration, Western Region, P.O. Box 92007, World Way Postal Center, Los Angeles, California 90009. Telephone: (213) 563-6351.

SUPPLEMENTARY INFORMATION: there have been reports that Bendix released 74 couplings that were improperly processed and contained stress risers which drastically reduce service life of the part. All but 11 couplings have been recovered. Nine are Hughes Part No. 369H92564 and two are Hughes Part No. 369A5501. Since this condition is likely to exist or develop on other helicopters of the same type design an Airworthiness Directive (AD) is being adopted which requires inspection of Bendix tail rotor couplings to determine serial numbers installed and removal from service of specific tail rotor couplings on the Hughes Model 369 Series Helicopters.

Adoption of the Amendment

Accordingly, pursuant to the authority delegated to me by the Administrator, § 39.13 of Part 39 of the Federal Aviation Regulations (14 CFR 39.13) is amended, by adding the following new airworthiness directive:

Hughes Helicopters: Applies to Model 369 Series Helicopters certified in all categories.

Compliance is required as indicated unless already accomplished.

To prevent possible fatigue failure of the Hughes couplings in the tail rotor drive shaft and loss of tail rotor power, accomplish the following:

(a) Within 25 hours' time in service from the effective date of this AD, inspect the fore and aft tail rotor drive shaft couplings to determine the serial numbers of the installed couplings. The serial number is on the Bendix part number decal.

(b) For those helicopters with the following couplings installed, prior to further flight, remove couplings from service and label couplings "Unairworthy." Hughes Part No. 369H92564, serial numbers 0883U, 0932U, 0933U, 0935U, 0940U, 0950U, 0957U, 0961U, 0971U; and for Hughes Part No. 369A5501, serial numbers 10670U and 10672U. Replace removed coupling with like serviceable part.

(c) Installation of any coupling listed in paragraph (b) will render the helicopter unairworthy.

(d) Report the serial number of each suspect coupling listed in paragraph (b) found as a result of the inspection of paragraph (a) to the Chief, Engineering and Manufacturing Branch, FAA, Western Region, P.O. Box 92007, World Way Postal Center, Los Angeles, California 90009. Negative reports are not necessary. Reporting approved by Office of Management and Budget, OMB No. 04/R0174.

(e) Special flight permits may be issued in accordance with FAR 21.197 and 21.199 to operate helicopters to a base for the accomplishment of inspections required by this AD.

(f) Alternative inspections, modifications or other actions which provide an equivalent level of safety may be used when approved by the Chief, Engineering and Manufacturing Branch, FAA Western Region.

This amendment becomes effective December 4, 1980.

(Secs. 313(a), 601, and 603, Federal Aviation Act of 1958, as amended (49 U.S.C. 1354(a), 1421, and 1423); Sec. 6(c) Department of Transportation Act (49 U.S.C. 1655(c)); and 14 CFR 11.89)

Note.—The FAA has determined that this document involves a final regulation which is not considered to be significant under Executive Order 12044 as implemented by DOT Regulatory Policies and Procedures (44 FR 11034; February 26, 1979).

Issued in Los Angeles, California on November 14, 1980.

John D. Mattson,

Director, FAA Western Region.

[FR Doc. 80-36827 Filed 11-26-80; 8:45 am]

BILLING CODE 4910-13-M

14 CFR Part 39

[Docket No. 80-NW-57-AD; Amdt. 39-3983]

Airworthiness Directives; Lockheed Model L-1011 Series Airplanes

AGENCY: Federal Aviation Administration (FAA), DOT.

ACTION: Final rule.

SUMMARY: This amendment adopts a new Airworthiness Directive (AD) which requires modification of certain fuel shut-off valves on Lockheed Model L-1011 series airplanes. The AD is needed to prevent fuel leakage and associated fire hazard.

DATE: Effective January 2, 1981.

Compliance required within 600 hours' time in service from the effective date of this AD unless already accomplished.

ADDRESSES: The applicable service information may be obtained from: Lockheed-California Company, P.O. Box 551, Burbank, California 91520, Attention: Commercial Support Contracts.

This information may also be examined at FAA Northwest Region, 9010 East Marginal Way South, Seattle, Washington 98108 or 15000 Aviation Boulevard, Hawthorne, California 90261, Room 6W14.

FOR FURTHER INFORMATION CONTACT: Sam Frick, Aerospace Engineer, ANW-140L, Federal Aviation Administration, Northwest Region, P.O. Box 92007, World Way Postal Center, Los Angeles, California 90009, Telephone (213) 536-6351.

SUPPLEMENTARY INFORMATION: A proposal to amend Part 39 of the Federal Aviation Regulations to include an Airworthiness Directive requiring modification of certain fuel shut-off valves on Lockheed Model L-1011 series airplanes was published in the Federal Register at (45 FR 50810). The proposal was prompted by reports of fuel leakage involving Whittaker fuel shut-off valves on the Lockheed Model L-1011 series airplanes that could result in a possible fire. Since this condition is likely to exist or develop on other airplanes of the same type design, this AD requires modification of the fuel shut-off valve assembly on Lockheed L-1011 series airplanes.

Interested persons have been afforded an opportunity to participate in the

making of the amendment. The proposed rule specified compliance within 300 hours' time in service from the effective date of this AD. Three operators are complying with the AD within 300 hours' time in service. One operator requested 600 hours compliance time, one operator requested 1800 hours compliance time and one operator requested 3000 hours compliance time. The main reason for the requested time increase is to enable the operator to modify the valves in their shops rather than on the airplane.

After careful review of all available data, including the comments submitted by the operators, the FAA has determined that sufficient evidence exists to justify the adoption of the proposed rule with a relieving change in the required compliance time from 300 to 600 hours' time in service from the effective date of this AD.

The FAA believes the compliance time of 600 hours' time in service should allow time for modification of the fuel shut-off valves without requiring removal of aircraft from service if the modifications are made to the valves while they are on the airplane. Modification of the valves on the airplane will also avoid disturbing the valve seals, thereby decreasing chance of valve seal leakage.

Adoption of the Amendment

Accordingly, pursuant to the authority delegated to me by the Administrator, § 39.13 of Part 39 of the Federal Aviation Regulations (14 CFR 39.13) is amended, by adding the following new airworthiness directive:

Lockhead-California Company: Applies to Model L-1011 series airplanes certificated in all categories.

Compliance is required as indicated, unless already accomplished.

To prevent fuel leakage of specified fuel shut-off valves which could result in fire hazard accomplish the following:

(a) Within 600 hours' time in service from the effective date of this AD, modify Whittaker fuel shut-off valves (12 per airplane) identified in paragraph 2.A of Lockheed Service Bulletin 093-28-062 Revision 1 dated August 20, 1980 by the incorporation of a mechanical pin retention device per Whittaker Controls Service Bulletin 139725-28-1 dated May 20, 1980. Valve assemblies with a gold anodized valve cover have been previously reworked and do not require further modification per this AD.

(b) Special flight permits may be issued in accordance with FAR 21.197 and 21.199 to operate airplanes to a base for the accomplishment of inspections required by this AD.

(c) Alternative inspections, modifications or other actions which provide an equivalent level of safety may be used when approved by the Chief, Los Angeles Area Aircraft Certification Office, FAA Northwest Region.

The manufacturers specifications and procedures identified and described in this directive are incorporated herein and made a part hereof pursuant to 5 U.S.C. 552(a)(1).

All persons affected by this directive who have not already received these documents from the manufacturer, may obtain copies upon request to Lockheed-California Company, P.O. Box 551, Burbank, California 91520, Attention: Commercial Support Contracts. These documents may also be examined at FAA Northwest Region, 9010 East Marginal Way South, Seattle, Washington 98108 or 15000 Aviation Boulevard, Hawthorne, California 90261, Room 6W14.

This amendment becomes effective January 2, 1981.

(Secs. 313(a), 601, and 603, Federal Aviation Act of 1958, as amended (49 U.S.C. 1354(a), 1421, and 1423); Sec. 6(c) Department of Transportation Act (49 U.S.C. 1655(c); and 14 CFR 11.89).

Note.—The FAA has determined that this document involves a final regulation which is not considered to be significant under Executive Order 12044 as implemented by DOT Regulatory Policies and Procedures (44 FR 11034; February 26, 1979)).

Issued in Seattle, Washington on November 18, 1980.

Charles R. Foster,

Director, FAA Northwest Region.

The incorporation by reference provisions in the document were approved by the Director of the Federal Register on June 19, 1967.

[FR Doc. 80-36831 Filed 11-26-80; 8:45 am]
BILLING CODE 4910-13-M

---

14 CFR Part 39

[Docket No. 80-NW-58-AD, Amdt. 39-3981]

Airworthiness Directives; McDonnell-Douglas DC-10 Series Airplanes

AGENCY: Federal Aviation Administration (FAA), DOT.

ACTION: Final rule.

SUMMARY: This amendment amends an existing Airworthiness Directive (AD) applicable to McDonnell Douglas DC-10 series airplanes by stating the specific landing weights which constitute overweight landings in regard to this AD. The amendment is needed to establish a firm definition of overweight landings for DC-10 operators.

DATES: Effective December 8, 1980. Compliance schedule—as prescribed in the body of the AD.

ADDRESS: McDonnell Douglas Corporation, Mr. William C. Starlof, Manager, Regulatory Affairs and FAA Liaison C1-290 (36-76) 3855 Lakewood Boulevard, Long Beach, California 98046.

Also, a copy of the service information may be reviewed at FAA Northwest Region, 9010 East Marginal Way South, Seattle, Washington 98108 or 15000 Aviation Boulevard, Hawthorne, California 90261, Room 6W14.

FOR FURTHER INFORMATION CONTACT: Doug Sharman, Aerospace Engineer, ANW-120L, Federal Aviation Administration, Western Region, P.O. Box 92007, World Way Postal Center, Los Angeles, California 90009. Telephone: (213) 536-6374.

SUPPLEMENTARY INFORMATION: This amendment amends Amendment 39-3780 (45 FR 35310) AD 80-11-05 which currently requires inspection of wing engine pylon and attachment for structural integrity after, among other things, hard or overweight landings on McDonnell Douglas DC-10 series airplanes. After issuing Amendment 39-3780 the FAA has determined that the overweight landing weights in regard to this AD should be specified. Therefore, the FAA is amending Amendment 39-3780 by specifying these weights for McDonnell Douglas DC-10 series airplanes.

Since this amendment provides a clarification only and imposes no additional burden on any person, notice and public procedure hereon are unnecessary and good cause exists for making this amendment effective in less than 30 days.

Adoption of the Amendment

Accordingly, pursuant to the authority delegated to me by the Administrator, § 39.13 of Part 39 of the Federal Aviation Regulations (14 CFR 39.13) is amended by amending Amendment 39-3780 (45 FR 35310) AD 80-11-05, by changing paragraph (j) 1. to read as follows:

1. Hard or overweight landings.

For the purposes of this AD, overweight landings are landings made at aircraft weights in excess of 369,000 pounds for DC-10-10 series airplanes and 436,000 pounds for DC-10-30 or DC-10-40 series airplanes.

Amendment 39-3780 became effective May 27, 1980.

This amendment becomes effective December 8, 1980.

Note.—The FAA has determined that this document involves a final regulation which is not considered to be significant under Executive Order 12044 as implemented by DOT Regulatory Policies and Procedures (44 FR 11034; February 26, 1979).

Issued in Seattle, Washington on November 18, 1980.

(Secs. 313(a), 601, and 603, Federal Aviation Act of 1958, as amended (49 U.S.C. 1354(a), 1421, and 1423); Sec. 6(c) Department of

Transportation Act (49 U.S.C. 1655(c)); and 14 CFR 11.89)

Charles R. Foster,

Director, Northwest Region.

[FR Doc. 80-36833 Filed 11-26-80; 8:45 am]

BILLING CODE 4910-13-M

14 CFR Part 39

[Docket No. 80-NE-21, Amdt. 39-3966]

Airworthiness Directives; Rolls-Royce, Ltd., DART 506, 510, 511, 514, 515, 520, 525, 526, 527, 528, 529, 530, 531, 532, 533, 534, 535, 536, 542, 543, 550, and All Variants Turboprop Engines

AGENCY: Federal Aviation Administration (FAA), DOT.

ACTION: Correction to final rule.

SUMMARY: In docket number 80-NE-21, Amendment 39-3966, appearing on Page 72632, Volume 45, No. 214, in the Federal Register of November 3, 1980, the closing date for submission of comments on the rule was omitted. Comments may be submitted until December 30, 1980.

FOR FURTHER INFORMATION CONTACT: Donald F. Perrault, Engine Standards Section, ANE-215, Engineering and Manufacturing Branch, Flight Standards Division, New England Region, Federal Aviation Administration, 12 New England Executive Park, Burlington, Massachusetts 01803; Telephone (617) 273-7337.

Issued in Burlington, Massachusetts, on November 17, 1980.

Robert E. Whittington,

Director, New England Region.

[FR Doc. 80-36830 Filed 11-26-80; 8:45 a.m.]

BILLING CODE 4910-13-M

14 CFR Part 71

[Airspace Docket No. 80-SO-55]

Designation of Transition Area, Immokalee, Florida

AGENCY: Federal Aviation Administration (FAA), DOT.

ACTION: Final Rule.

SUMMARY: This rule designates the Immokalee, Florida, Transition Area. A standard instrument approach procedure has been developed for the Immokalee Airport. Additional controlled airspace is required to protect aircraft executing the approach procedure. The airspace must be designated before the approach procedure can become effective.

EFFECTIVE DATE: 0901 GMT, December 22, 1980.

ADDRESS: Federal Aviation Administration, Chief, Air Traffic Division, P.O. Box 20636, Atlanta, Georgia 30320.

FOR FURTHER INFORMATION CONTACT: Harlen D. Phillips, Airspace and Procedures Branch, Federal Aviation Administration, P.O. Box 20636, Atlanta, Georgia 30320; telephone: 404-763-7646.

SUPPLEMENTARY INFORMATION: A Notice of Proposed Rulemaking was published in the Federal Register on Monday, September 22, 1980 (45 FR 62847), which proposed the designation of the Immokalee, Florida, Transition Area. This action adopts the proposal and thereby provides controlled airspace protection for aircraft executing the new standard instrument approach procedure, VOR RWY 18, at the Immokalee Airport. The airport operating status is hereby changed from VFR to IFR. No objections were received from the notice.

Adoption of the Amendment

Accordingly, Subpart G, § 71.181 (45 FR 445) of Part 71 of the Federal Aviation Regulations (14 CFR 71) is amended, effective 0901 GMT, December 22, 1980, by adding the following:

Immokalee, Florida

That airspace extending upward from 700 feet above the surface within a 7-mile radius of Immokalee Airport (Lat. 26°25'45" N., Long. 81°24'00" W.).

(Sec. 307(a) of the Federal Aviation Act of 1958, as amended (49 U.S.C. 1348(a)) and Sec. 6(c) of the Department of Transportation Act (49 U.S.C. 1655(c)))

Note.—The Federal Aviation Administration has determined that this document involves a regulation which is not significant under Executive Order 12044, as implemented by DOT Regulatory Policies and Procedures (44 FR 11034, February 26, 1979). Since this regulatory action involves an established body of technical requirements for which frequent and routine amendments are necessary to keep them operationally current and promote safe flight operations, the anticipated impact is so minimal that this action does not warrant preparation of a regulatory evaluation.

Issued in East Point, Georgia, on November 18, 1980.

George R. LaCaille,

Acting Director, Southern Region.

[FR Doc. 80-36829 Filed 11-26-80; 8:45 am]

BILLING CODE 4910-13-M

14 CFR Part 71

[Airspace Docket No. 80-AWA-20]

Gulf of Alaska Control Area—Correction

AGENCY: Federal Aviation Administration (FAA), DOT.

ACTION: Correction to final rule.

SUMMARY: An error was noted in the description of the Gulf of Alaska Control Area. The current description is correct; however, the altitude has inadvertently been omitted. This action amends the description by adding the altitude.

EFFECTIVE DATE: November 28, 1980.

FOR FURTHER INFORMATION CONTACT: Lewis W. Still, Airspace Regulations and Obstructions Branch (AAT-230), Airspace and Air Traffic Rules Division, Air Traffic Service, Federal Aviation Administration, 800 Independence Avenue SW., Washington, D.C. 20591; telephone: (202) 426-8525.

SUPPLEMENTARY INFORMATION: The Airspace Designation; Compilation of Regulations was published in the Federal Register on January 2, 1980. An error was discovered in the description of the Gulf of Alaska Control Area (45 FR 353). The 700 foot altitude floor designation was inadvertently omitted. This action corrects the description by adding the altitude.

Adoption of the Amendment

Accordingly, pursuant to the authority delegated to me by the Administrator, the Airspace Designation; Compilation of Regulations as published in the Federal Register on January 2, 1980, is corrected as follows:

Under § 71.163

In Gulf of Alaska

"From Lat. 60°09'00" N., Long. 144°30'00" W.," is deleted and "That airspace extending upward from 700 feet NSL bounded by Lat. 60°09'00" N., Long. 144°30'00" W.," is substituted therefor.

(Secs. 307(a) and 313(a), Federal Aviation Act of 1958 (49 U.S.C. 1348(a) and 1354(a)); Sec. 6(c), Department of Transportation Act (49 U.S.C. 1655(c)); and 14 CFR 11.69)

Note.—The FAA has determined that this document involves a regulation which is not significant under Executive Order 12044, as implemented by DOT Regulatory Policies and Procedures (44 FR 11034; February 26, 1979). Since this regulatory action involves an established body of technical requirements for which frequent and routine amendments are necessary to keep them operationally current and promote safe flight operations, the anticipated impact is so minimal that this action does not warrant preparation of a regulatory evaluation.

Issued in Washington, D.C., on November 21, 1980.

B. Keith Potts,

Acting Chief, Airspace and Air Traffic Rules Division.

[FR Doc. 80-37062 Filed 11-28-80; 8:45 am]

BILLING CODE 4910-13-M

14 CFR Part 73

[Airspace Docket No. 80-ASW-51]

Amendment to Restricted Area, Fort Sill, Okla.

AGENCY: Federal Aviation Administration (FAA), DOT.

ACTION: Final Rule; request for comments.

SUMMARY: This action amends two restricted areas at Fort Sill, Okla., to return to public use, airspace no longer required as restricted airspace for military use.

DATES: Effective date November 28, 1980.

Comments must be received by December 29, 1980.

ADDRESSES: Send comments on the proposal in triplicate to: Director, FAA Southwest Region, Attention: Chief, Air Traffic Division, Docket No. 80-ASW-51, Federal Aviation Administration, P.O. Box 1689, Fort Worth, Tex. 76101.

The official docket may be examined at the following location: FAA Office of the Chief Counsel, Rules Docket (AGC-204), Room 916, 800 Independence Avenue, SW., Washington, D.C. 20591.

An informal docket may be examined at the office of the Regional Air Traffic Division.

FOR FURTHER INFORMATION CONTACT: George O. Hussey, Airspace Regulations Branch (AAT-230), Airspace and Air Traffic Rules Division, Air Traffic Service, Federal Aviation Administration, 800 Independence Avenue, SW., Washington, D.C. 20591; telephone: (202) 426-3715.

SUPPLEMENTARY INFORMATION:

The Rule

This amendment to Part 73 of the Federal Aviation Regulations (14 CFR Part 73) changes the base altitudes of R-5601D and R-5601E from the surface to 500 feet AGL. The using agency no longer has a requirement for the airspace below 500 feet AGL in these areas and has agreed to this amendment. Because this action reduces a burden on the public by relieving a restriction, I find that notice and public procedure, and publication 30 days before the effective date are unnecessary; however, comments are invited on the rule. When the comment period ends, the FAA will use the comments and any other available information to review the regulation. Section 73.56 of Part 73 of the Federal Aviation Regulations (14 CFR Part 73) was published in the Federal Register on January 2, 1980, (45 FR 719).

Adoption of the Amendment

Accordingly, pursuant to the authority delegated to me by the Administrator, Section 73.56 of Part 73 of the Federal Aviation Regulations (14 CFR Part 73) as republished (45 FR 719) is amended, effective 0901 GMT, November 28, 1980 as follows:

1. In § 73.56 under R-5601D, Fort Sill, Okla., designated altitudes are changed to read "500 feet AGL to 16,500 feet MSL."

2. In § 73.56 under R-5601E Fort Sill, Okla., designated altitudes are changed to read "500 feet AGL to 6,000 feet MSL."

(Secs. 307(a) and 313(a), Federal Aviation Act of 1958 (49 U.S.C. 1348(a) and 1354(a)); Sec. 6(c), Department of Transportation Act (49 U.S.C. 1655(c)); and 14 CFR 11.69)

Note.—The FAA has determined that this document involves a regulation which is not significant under Executive Order 12044, as implemented by DOT Regulatory Policies and Procedures (44 FR 11034; February 26, 1979). Since this regulatory action involves an established body of technical requirements for which frequent and routine amendments are necessary to keep them operationally current and promote safe flight operations, the anticipated impact is so minimal that this action does not warrant preparation of a regulatory evaluation.

Issued in Washington, D.C., on November 21, 1980.

B. Keith Potts,

Acting Chief, Airspace and Air Traffic Rules Division.

[FR Doc. 80-37061 Filed 11-28-80; 8:45 am]

BILLING CODE 4910-13-M

14 CFR Part 97

[Docket No. 21102; Amdt. No. 1178]

Standard Instrument Approach Procedures; Miscellaneous Amendments

AGENCY: Federal Aviation Administration (FAA), DOT.

ACTION: Final rule.

SUMMARY: This amendment establishes, amends, suspends, or revokes Standard Instrument Approach Procedures (SIAPs) for operations at certain airports. These regulatory actions are needed because of the adoption of new or revised criteria, or because of changes occurring in the National Airspace System, such as the commissioning of new navigational facilities, addition of new obstacles, or changes in air traffic requirements. These changes are designed to provide safe and efficient use of the navigable airspace and to promote safe flight operations under instrument flight rules at the affected airports.

DATES: An effective date for each SIAP is specified in the amendatory provisions.

ADDRESSES: Availability of matters incorporated by reference in the amendment is as follows:

For Examination

1. FAA Rules Docket, FAA Headquarters Building, 800 Independence Avenue, SW., Washington, D.C. 20591;

2. The FAA Regional Office of the region in which the affected airport is located; or

3. The Flight Inspection Field Office which originated the SIAP.

For Purchase

Individual SIAP copies may be obtained from:

1. FAA Public Information Center (APA-430), FAA Headquarters Building, 800 Independence Avenue, SW., Washington, D.C. 20591; or

2. The FAA Regional Office of the region in which the affected airport is located.

By Subscription

Copies of all SIAPs, mailed once every 2 weeks, may be ordered from Superintendent of Documents, U.S. Government Printing Office, Washington, D.C. 20402. The annual subscription price is $135.00.

FOR FURTHER INFORMATION CONTACT: Donald K. Funai, Flight Procedures and Airspace Branch (AFO-730), Aircraft Programs Division, Office of Flight Operations, Federal Aviation Administration, 800 Independence Avenue, SW., Washington, D.C. 20591; telephone (202) 426-8277.

SUPPLEMENTARY INFORMATION: This amendment to Part 97 of the Federal Aviation Regulations (14 CFR Part 97) prescribes new, amended, suspended, or revoked Standard Instrument Approach Procedures (SIAPs). The complete regulatory description of each SIAP is contained in official FAA form documents which are incorporated by reference in this amendment under 5 U.S.C. § 552(a), 1 CFR Part 51, and § 97.20 of the Federal Aviation Regulations (FARs). The applicable FAA Forms are identified as FAA Forms 8260-3, 8260-4 and 8260-5. Materials

incorporated by reference are available for examination or purchase as stated above.

The large number of SIAPs, their complex nature, and the need for a special format make their verbatim publication in the Federal Register expensive and impractical. Further, airmen do not use the regulatory text of the SIAPs, but refer to their graphic depiction on charts printed by publishers of aeronautical materials. Thus, the advantages of incorporation by reference are realized and publication of the complete description of each SIAP contained in FAA form document is unnecessary. The provisions of this amendment state the affected CFR (and FAR) sections, with the types and effective dates of the SIAPs. This amendment also identifies the airport, its location, the procedure identification and the amendment number.

This amendment to Part 97 is effective on the date of publication and contains separate SIAPs which have compliance dates stated as effective dates based on related changes in the National Airspace System or the application of new or revised criteria. Some SIAP amendments may have been previously issued by the FAA in a National Flight Data Center (FDC) Notice to Airmen (NOTAM) as an emergency action of immediate flight safety relating directly to published aeronautical charts. The circumstances which created the need for some SIAP amendments may require making them effective in less than 30 days. For the remaining SIAPs, an effective date at least 30 days after publication is provided.

Further, the SIAPs contained in this amendment are based on the criteria contained in the U.S. Standard for Terminal Instrument Approach Procedures (TERPs). In developing these SIAPs, the TERPs criteria were applied to the conditions existing or anticipated at the affected airports. Because of the close and immediate relationship between these SIAPs and safety in air commerce, I find that notice and public procedure before adopting these SIAPs is unnecessary, impracticable, or contrary to the public interest and, where applicable, that good cause exists for making some SIAPs effective in less than 30 days.

Adoption of the Amendment

Accordingly, pursuant to the authority delegated to me, Part 97 of the Federal Aviation Regulations (14 CFR Part 97) is amended by establishing, amending, suspending, or revoking Standard Instrument Approach Procedures, effective at 0901 G.m.t. on the dates specified, as follows:

1. By amending § 97.23 VOR-VOR/DME SIAPs identified as follows:

* * * Effective January 22, 1981:

Philip, SD—Philip Airport, VOR-A, Amdt. 8

* * * Effective January 8, 1981:

Lanett, AL—Lanett Muni, VOR/DME-A, Original
Naples, FL—Naples Muni, VOR Rwy 4, Amdt. 1
Naples, FL—Naples Muni, VOR Rwy 22, Amdt. 1
Naples, FL—Naples Muni, VOR/DME-A, Amdt. 3
Cornelia, GA—Habersham County, VOR/DME Rwy 6, Amdt. 2
Jacksonville, IL—Jacksonville Muni, VOR Rwy 13, Amdt. 6
Muncie, IN—Delaware County-Johnson Field, VOR Rwy 14, Amdt. 11
Muncie, IN—Delaware County-Johnson Field, VOR Rwy 20, Amdt. 8
Muncie, IN—Delaware County-Johnson Field, VOR Rwy 32, Amdt. 9
Saginaw, MI—Tri-City, VOR Rwy 14, Amdt. 11
Saginaw, MI—Tri-City, VOR Rwy 32, Amdt. 7
St. Cloud, MN—St. Cloud Muni, VOR/DME Rwy 13, Amdt. 1
Belzoni, MS—Belzoni Muni, VOR/DME Rwy 21, Amdt. 2
Princeton (Rocky Hill), NJ—Princeton, VOR-A, Amdt. 5
Statesville, NC—Statesville Muni, VOR/DME Rwy 10, Amdt. 2
Woodsfield, OH—Monroe County, VOR/DME Rwy 25, Amdt. 2

* * * Effective December 25, 1980:

San Francisco, CA—San Francisco Intl. VOR Rwy 19L, Amdt. 7
Watsonville, CA—Watsonville Municipal, VOR/DME-A, Amdt. 3
Greenville, NC—Pitt-Greenville, VOR/DME-A, Amdt. 1, cancelled
Fort Stockton, TX—Pecos County, VOR Rwy 12, Amdt. 5
Fort Stockton, TX—Pecos County, VOR/DME-A, Amdt. 3

* * * Effective November 14, 1980:

Galesburg, IL—Galesburg Muni, VOR Rwy 2, Amdt. 1

* * * Effective November 13, 1980:

Melfa, VA—Accomack County, VOR/DME Rwy 3, Amdt. 3

2. By amending § 97.25 SDF-LOC-LDA SIAPs identified as follows:

* * * Effective January 8, 1981:

LaCrosse, WI—LaCrosse Muni, LOC BC Rwy 36, Amdt. 8, cancelled

* * * Effective December 25, 1980:

Roswell, NM—Roswell Industrial Air Center, LOC BC Rwy 3, Amdt. 3

* * * Effective November 13, 1980:

Millville, NJ—Millville Muni, LOC Rwy 10, Amdt. 2

3. By amending § 97.27 NDB/ADF SIAPs identified as follows:

* * * Effective January 22, 1981:

Mt. Pleasant, IA—Mt. Pleasant Muni, NDB Rwy 33, Amdt. 3
Sac City, IA—Sac City Muni, NDB Rwy 36, Amdt. 1

* * * Effective January 8, 1981:

Denver, CO—Arapahoe County, NDB Rwy 34R, Amdt. 5
Naples, FL—Naples Muni, NDB Rwy 4, Amdt. 3
Naples, FL—Naples Muni, NDB Rwy 22, Amdt. 3
Hinesville, GA—Liberty County, NDB-A, Original
Muncie, IN—Delaware County-Johnson Field, NDB Rwy 32, Amdt. 4
Charlevoix, MI—Charlevoix Muni, NDB Rwy 8, Amdt. 5
Houghton Lake, MI—Roscommon County, NDB Rwy 27, Amdt. 6
Statesville, NC—Statesville Muni, NDB Rwy 20, Amdt. 4
Reidsville, NC—Rockingham County NC Shiloh, NDB Rwy 31, Original

* * * Effective December 25, 1980:

Chino, CA—Chino, NDB-C, Original
Burns, OR—Burns Muni, NDB Rwy 29, Original, cancelled

* * * Effective November 13, 1980:

Melfa, VA—Accomack County, NDB Rwy 3, Amdt. 4

* * * Effective October 24, 1980:

Denton, TX—Denton Muni, NDB Rwy 17, Amdt. 2

4. By amending § 97.29 ILS-MLS SIAPs identified as follows:

* * * Effective January 8, 1981:

Denver, CO—Jeffco, ILS Rwy 29R, Amdt. 6
Denver, CO—Arapahoe County, ILS Rwy 34R, Amdt. 2
Muncie, IN—Delaware County-Johnson Field, ILS Rwy 32, Amdt. 1

* * * Effective December 25, 1980:

San Francisco, CA—San Francisco Intl., ILS Rwy 19L, Amdt. 16
Detroit, MI—Detroit Metropolitan-Wayne County, ILS Rwy 3R, Amdt. 5

* * * Effective November 14, 1980:

Galesburg, IL—Galesburg Muni, ILS Rwy 2, Amdt. 3

* * * Effective October 24, 1980:

Denton, TX—Denton Muni, ILS Rwy 17, Amdt. 2

5. By amending § 97.31 RADAR SIAPs identified as follows:

* * * Effective January 8, 1981:

Denver, CO—Arapahoe County, RADAR-1, Amdt. 9
Springfield, IL—Capital, RADAR-1, Amdt. 4

6. By amending § 97.33 RNAV SIAPs identified as follows:

* * * *Effective January 8, 1981:*

Denver, CO—Arapahoe County, RNAV Rwy 28, Amdt. 2
Denver, CO—Jeffco, RNAV Rwy 29R, Amdt. 6
Jacksonville, IL—Jacksonville Muni, RNAV Rwy 31, Amdt. 3
Statesville, NC—Statesville Muni, RNAV Rwy 2, Amdt. 2

(Secs. 307, 313(a), 601, 1110, Federal Aviation Act of 1958 (49 U.S.C. 1348, 1354(a), 1421, 1510); sec. 6(c), Department of Transportation Act (49 U.S.C. 1655(c)); 14 CFR 11.49(b)(3))

Note.—The FAA has determined that this document involves a regulation which is not significant under Executive Order 12044, as implemented by DOT Regulatory Policies and Procedures (44 FR 11034; February 26, 1979). Since this regulatory action involves an established body of technical requirements for which frequent and routine amendments are necessary to keep them operationally current and promote safe flight operations, the anticipated impact is so minimal that this action does not warrant preparation of a regulatory evaluation.

Issued in Washington, D.C., on November 21, 1980.

John S. Kern,

Chief, Aircraft Programs Division.

Note.—The incorporation by reference in the preceding document was approved by the Director of the Federal Register on May 12, 1969.

[FR Doc. 80-37048 Filed 11-26-80; 8:45 am]
BILLING CODE 4910-13-M

DEPARTMENT OF COMMERCE

Office of the Secretary

15 CFR Part 4

Location of Freedom of Information Act Reference Facilities; Delegation of Initial Denial Authority

AGENCY: Department of Commerce.

ACTION: Final rule.

SUMMARY: The Department of Commerce revises Appendices B and C to its Freedom of Information Act rules. Appendix B contains the names and addresses of the Department's Freedom of Information public facilities. Appendix C lists the officials authorized to make initial denials for Freedom of Information requests. The purpose of this revision is to reflect organizational changes and address changes.

EFFECTIVE DATE: November 28, 1980.

FOR FURTHER INFORMATION CONTACT: Mr. Donald S. Budowsky, U.S. Department of Commerce, Office of Organization and Management Systems, Washington, D.C. 20230, telephone (202) 377-4217.

SUPPLEMENTARY INFORMATION: Since these revisions involve internal agency procedures, the Administrative Procedure Act (5 U.S.C. 553) provisions requiring notice of proposed rulemaking, opportunity for public participation, and delay in effective date are inapplicable. Also, this regulation is not significant under Executive Order 12044.

The types of revisions made to the Department of Commerce Freedom of Information Act rules, Appendices B and C, include the following:

Throughout each appendix, the title of the Industry and Trade Administration is changed to the International Trade Administration, and the title of the Office of Minority Business Enterprise is changed to the Minority Business Development Agency. All references to the United States Fire Administration are deleted because that organization has been transferred to the Federal Emergency Management Agency.

Other revisions to Appendix B are changes in address or telephone number of the public reference facilities of the Office of the Secretary, Bureau of Economic Analysis, Economic Development Administration, International Trade Administration, and the National Technical Information Service.

Other revisions to Appendix C reflect organizational changes or the selection of different officials with initial denial authority in the following Departmental components: Office of the Secretary, Bureau of the Census, Bureau of Industrial Economics, Economic Development Administration, International Trade Administration, National Oceanic and Atmospheric Administration, National Technical Information Service, National Telecommunications and Information Administration, and United States Travel Service.

Incorporating these changes, 15 CFR Part 4, Appendices B and C, are revised to read as follows:

Appendix B—Freedom of Information Public Facilities and Addresses For Requests For Records

The following public reference facilities have been established within the Department of Commerce (a) for the public inspection and copying of materials of particular units of the Department under 5 U.S.C. 552(a)(2) or determined to be available for response to requests made under 5 U.S.C. 552(a)(3); (b) for furnishing information and otherwise assisting the public concerning Departmental operations under the Freedom of Information Act; and (c) as addresses, in some instances, for the receipt and processing of requests for records under 5 U.S.C. 552(a)(3). Units having separate mailing addresses are noted below. Requests should be addressed to the unit which the requester knows or has reason to believe has possession or control or has primary concern with the records sought. Otherwise, requests should be addressed to the Central Reference and Records Inspection Facility.

Department of Commerce Freedom of Information Central Reference and Records Inspection Facility, Room 5317, Department of Commerce Building, 14th Street between Constitution Avenue and E Street, NW., Washington, D.C. 20230. Phone (202) 377-4217. This facility serves the Office of the Secretary of Commerce and all other units of the Department not identified below as explained at Sec. 15 CFR 4.4(c) and (d)

Bureau of the Census, Freedom of Information Request Control Desk, Room 2428, Federal Building 3, Washington, D.C. 20233. Phone (301) 763-5262.

Bureau of Economic Analysis, Public Reference Facility, 11th Floor, Tower Building, 1401 K Street, NW., Washington, D.C. Phone (202) 523-0505. Mailing address: Bureau of Economic Analysis, Freedom of Information Request Control Desk, Room 508, Tower Building, 1401 K Street, NW., Washington, D.C. 20230.

Economic Development Administration, Freedom of Information Records Inspection Facility, Room 7019, Department of Commerce Building, 14th Street between Constitution Avenue and E Street, NW., Washington, D.C. 20230. Phone (202) 377-5113. Mailing address of Regional EDA Offices:

Atlantic Regional Office, EDA, U.S. Department of Commerce, Freedom of Information Request Control Desk, Federal Reserve Bank Building, Room 600, 105 North 7th Street, Philadelphia, Pennsylvania 19106.

Southeastern Regional Office, EDA, U.S. Department of Commerce, Freedom of Information Request Control Desk, Suite 700, 1365 Peachtree Street, NE., Atlanta, Georgia 30309.

Rocky Mountain Regional Office, EDA, U.S. Department of Commerce, Freedom of Information Request Control Desk, Suite 505, Title Building, 909 17th Street, Denver, Colorado 80202.

Midwestern Regional Office, EDA, U.S. Department of Commerce, Freedom of Information Request Control Desk, 175 West Jackson Boulevard, Suite A-1630, Chicago, Illinois 60604.

Western Regional Office, EDA, U.S. Department of Commerce, Freedom of Information Request Control Desk, 1700 Westlake North, Suite 500, Seattle, Washington 98109.

Southwestern Regional Office, EDA, U.S. Department of Commerce, Freedom of Information Request Control Desk, American Bank Tower, Suite 600, 221 West Sixth Street, Austin, Texas 78701.

International Trade Administration, Freedom of Information Records Inspection Facility, Room 3102, Department of Commerce Building, 14th Street between Constitution Avenue and E Street, NW., Washington, D.C. 20230. Phone (202) 377-3031.

Maritime Administration, Freedom of Information Records Inspection Facility, Room 3099-B, Department of Commerce Building, 14th Street between Constitution Avenue and E Street, NW., Washington, D.C. 20230. Phone (202) 377-2188. Mailing address: Maritime Administration,

Freedom of Information Request Control Desk, Secretary, Maritime Administration, Room 3099-B, U.S. Department of Commerce, Washington, D.C. 20230.

Minority Business Development Administration, Freedom of Information Office, Room 5087, Department of Commerce Building, 14th Street between Constitution Avenue and E Street, NW., Washington, D.C. 20230. Phone (202) 377-5641.

National Bureau of Standards, Freedom of Information Records Inspection Facility, Room E120, Administration Building, Gaithersburg, Maryland. Phone (301) 921-2425. Mailing address: National Bureau of Standards, Freedom of Information Request Control Desk, Room A1128, U.S. Department of Commerce, Washington, D.C. 20234 (Gaithersburg, Maryland).

National Oceanic and Atmospheric Administration, Public Reference Facility, Administrative Documentation Officer (AD 312), Room 324, Building 5, Washington Science Center, 6010 Executive Boulevard, Rockville, Maryland 20852. Phone (301) 443-8192.

National Technical Information Service, Freedom of Information Records Inspection Facility, 5285 Port Royal Road, Springfield, Virginia 22161. Phone (703) 487-4634.

National Telecommunications and Information Administration, Freedom of Information Request Control Desk, 1800 G Street, NW., Washington, D.C. 20504. Phone (202) 377-1800.

Patent and Trademark Office, Freedom of Information Records Inspection Facility, Room 11c12, Building 3, Crystal Plaza, Arlington, Virginia. Phone (703) 557-3525. Mailing address: Patent and Trademark Office, Freedom of Information Request Control Desk, Box 50, Washington, D.C. 20231.

United States Travel Service, Freedom of Information Request Control Desk, Room 1524, Department of Commerce Building, 14th Street between Constitution and E Street, NW., Washington, D.C. 20230. Phone (202) 377-3811.

Appendix C—Officials Authorized to Make Initial Denials of Requests For Records

The following officials of the Department have been delegated authority to initially deny requests for records of their respective units for which they are responsible. (The listings are subject to change because of organizational revisions or new delegations. Accordingly, the Director, Office of Organization and Management Systems is specifically authorized to amend or revise this Appendix from time to time in order to reflect such changes.)

Office of the Secretary:

Office of the Deputy Secretary:
Director, Office of Small and Disadvantaged Business Utilization.
Office of the Associate Deputy Secretary:
Director, Office of Business Liaison;
Director, Office of Program Coordination;
Director, Office of Regional Affairs;
Director, Office of Regional Development;
Director, Office of State and Local Government Assistance.
Office of Consumer Affairs: Director.
Office of Public Affairs: Director and Deputy Director.

Office of the Assistant Secretary for Congressional Affairs:

Deputy Assistant Secretary for Congressional Affairs.

Office of the Assistant Secretary for Policy:

Deputy Assistant Secretary for Domestic Economic Policy Coordination;
Deputy Assistant Secretary for Ocean, Resource, and Scientific Policy Coordination;
Deputy Assistant Secretary for International Policy Coordination;
Director, Office of Policy Planning and Programs.

Office of Inspector General: Assistant Inspector General for Auditing; Assistant Inspector General for Investigations.

Office of the General Counsel: Deputy General Counsel; Assistant General Counsel for Administration.

Office of the Assistant Secretary for Productivity, Technology and Innovation.

Deputy Assistant Secretary for Productivity, Technology, and Innovation

Office of the Chief Economist of the Department of Commerce: Deputy Chief Economist.

Office of the Assistant Secretary for Administration:

Office of the Deputy Assistant Secretary for Acquisitions, Grants, and Information Management:
Office of Acquisition and Grants Management: Director.
Office of Information Management: Director.
Office of the Deputy Assistant Secretary for Resources Management:
Office of Budget: Director.
Office of Civil Rights: Director.
Office of Financial Management: Director.
Office of Organization and Management Systems:
Director; Deputy Director; Chiefs, Emergency Planning and Coordination Division, Information Policy Division, Management Analysis Division.
Office of Personnel:
Director; Deputy Director; Chief, Medical Division; Policy Officer, Policy Staff.
Office of Program Evaluation: Director.
Office of the Deputy Assistant Secretary for Operations:
Office of Administrative Services: Director and Deputy Director.
Office of Budget Operations: Director.
Office of Finance Operations: Director.
Office of Intelligence Liaison: Director and Deputy Director.
Office of Investigations and Security: Director and Deputy Director.
Office of Personnel Operations: Director.
Office of Publications: Director and Deputy Director.

Bureau of Census: Associate Director for Administration.

Bureau of Economic Analysis: Deputy Director.

Bureau of Industrial Economics: Administrative Officer.

Economic Development Administration: Director and Deputy Director, Office of Public Affairs.

International Trade Administration:

Administration:
Director, Office of Management and Systems.
Director, Office of Administrative Support.
Director, Office of Budget.
Director, Office of Personnel.
Director, Office of Public Affairs.
U.S. Commercial Service:
Deputy Assistant Secretary for the U.S. Commercial Service.
Foreign Commercial Service:
Director General of the Foreign Commercial Service.
Office of the Assistant Secretary for Trade Development:
Director, Office of Export Promotion.
Director, Office of Export Marketing Assistance.
Director, Office of Export Planning and Evaluation.
Director, Office of Country Marketing.
Director, Office of East-West Trade Development.
Director, Office of East-West Country Affairs.
Director, Office of East-West Policy and Planning.
Office of the Assistant Secretary for International Economic Policy:
Director, Office of Trade Policy.
Director, Office of Commodity Policy.
Director, Office of International Economic Relations.
Director, Office of Foreign Investment in the U.S.
Director, Office of International Finance and Investment.
Director, Office of Textiles and Apparel.
Director, Office of Planning and Research.
Director, Office of International Sectoral Policy.
Office of the Assistant Secretary for Trade Administration:
Director, Office of Export Administration.
Director, Office of Antiboycott Compliance.
Director, Office of Industrial Mobilization.
Deputy to the Deputy Assistant of Secretary for Import Administration.
Director, Office of Investigations.
Director, Office of Policy.
Director, Office of Compliance.
Director, Statutory Import Programs Staff.
Director, Foreign Trade Zones Staff.

Maritime Administration: Secretary, Maritime Administration.

Minority Business Development Agency: Chief Counsel and Deputy Chief Counsel.

National Bureau of Standards: Director of Administrative and Information Systems.

National Oceanic and Atmospheric Administration:

Associate Administrator. Director of the NOAA Corps.
Assistant Administrator for Policy and Planning.
Assistant Administrator for Fisheries.
Assistant Administrator for Coastal Zone Management.
Assistant Administrator for Research and Development.
Director, Environmental Research Laboratories.
Director, Office of Marine Pollution Assessment.
Director, Office of Sea Grant.

Assistant Administrator for Oceanic and Atmospheric Services.
Director, Environmental Data and Information Service.
Director, National Ocean Survey.
Director, National Weather Service.
Director, Ocean Technology and Engineering Services.
Assistant Administrator for Management and Budget.
Assistant Administrator for Satellites.
National Technical Information Service: Associate Director, Financial and Administrative Management; Chief, Management and Organization Division.
National Telecommunications and Information Administration: Chief Counsel.
Director, Office of International Affairs.
Director, Office of Administration.
Director, Office of Congressional and Public Affairs.
Associate Administrator for Telecommunications Applications.
Associate Administrator for Federal Systems and Spectrum Management.
Deputy Associate Administrator for Federal Systems and Spectrum Management.
Director, Government Communications.
Director, Spectrum Plans and Policies.
Associate Administrator for Institute for Telecommunication Sciences.
Deputy Director, Institute for Telecommunication Sciences.
Associate Administrator for Policy Analysis and Development.
Deputy Associate Administrator for Policy Analysis and Development.
Director, Domestic Common Carrier Industry and Market Structure Program.
Director, Broadcasting, Cable & Mobile Radio Policy Program.
Director, Economic Assessment of Spectrum Scarcity Program.
Director, International Policy Program.
Director, Information Policy Program.
Patent and Trademark Office: Solicitor of Patents, or in his absence the Deputy Solicitor.
United States Travel Service: Director, Office of Management and Administration; Director, Office of Marketing and Field Operations.

(5 U.S.C. 552, as amended by Pub. L. 94-409, 5 U.S.C. 553; 5 U.S.C. 301; Reorganization Plan No. 5 of 1950)

Dated: November 20, 1980.

Elsa A. Porter,

Assistant Secretary for Administration.

[FR Doc. 80-36979 Filed 11-26-80; 8:45 am]
BILLING CODE 3510-17-M

SECURITIES AND EXCHANGE COMMISSION

17 CFR Part 240

[Release No. 34-17314; File No. S7-842]

Amendments to Rule 10a-1 Relating to Short Selling by Brokers and Dealers

AGENCY: Securities and Exchange Commission.

ACTION: Final rule amendments.

SUMMARY: The Commission announces the adoption of amendments to its rule governing short sales in order to eliminate a potential conflict between that rule and its firm quotation rule. The amendments modify the rule to (1) permit a broker-dealer, under certain specified circumstances, to effect short sales of a security at a price equal to the price associated with that broker-dealer's most recently communicated offer for that security, and (2) provide a new definition of the term "third market maker."

EFFECTIVE DATE: November 20, 1980

FOR FURTHER INFORMATION CONTACT: Suzanne Brannan, (202) 272-2889, Room 391, regarding this release or questions generally relating to market maker obligations under Rule 10a-1, or Carlos M. Morales, (202) 272-3103, Room 301, regarding other aspects of Rule 10a-1, including broker-dealers' and investors' obligations under the Rule, Division of Market Regulation, Securities and Exchange Commission, 500 North Capitol Street, Washington, D.C. 20549.

SUPPLEMENTARY INFORMATION: The Securities and Exchange Commission ("SEC" or "Commission") today announced the adoption of amendments to Rule 10a-1 ("Rule")[1] under the Securities Exchange Act of 1934 ("Act"),[2] the Commission's antimanipulative rule regulating short sales.[3] The amendments modify the Rule to provide that a broker-dealer may execute a short sale in a reported security,[4] under certain specified circumstances, at a price equal to the price associated with the offer he most recently communicated pursuant to Rule 11Ac1-1 under the Act ("Quote Rule").[5] The modifications are designed to resolve a conflict between the "firmness requirement" of the Quote Rule[6] and Rule 10a-1. Specifically, situations have arisen in the current trading environment where a broker-dealer must either "back away" from his current quotation, thereby possibly violating the Quote Rule, or execute an order and possibly violate Rule 10a-1.[7] In addition, the amendments provide a new definition of the term "third market maker."[8]

I. Equalizing Exemptions

A. Introduction and Background

Rule 10a-1 generally provides that short sales in reported securities may be effected only on a plus tick (*i.e.*, at a price above the price at which the immediately preceding last sale was effected) or a zero-plus tick (*i.e.*, at a price equal to the last sale if the last preceding transaction at a different price was at a lower price), established by reference to the last sale price reported from any market in the consolidated system.[9] However, paragraph (e)(5) of the Rule, commonly referred to as the "equalizing exemption," provides an exception from this general provision which allows a market maker (*i.e.*, an exchange specialist, registered exchange market maker or third market maker) to effect short sales for his own account at a price equal to the last sale price

[1] 17 CFR 240.10a-1.

[2] 15 U.S.C. 78a *et seq.*

[3] Short selling has been the subject of Commission regulation since 1938. *See* Securities Exchange Act Release No. 13091, at 5 n.2, (December 21, 1976), 41 FR 56530, 56530 n.2. The Commission consistently has stated that such regulation should accomplish three objectives: (1) to allow relatively unrestricted short selling in advancing markets, (2) to prevent short selling at successively lower prices, thus eliminating short-selling as a tool for driving the market down, and (3) to prevent short sellers from accelerating a declining market by exhausting all remaining bids at one price level causing successively lower prices to be established by long sellers. *See* Securities Exchange Act Release No. 11468 (June 12, 1975), 40 FR 25443.

[4] Reported securities include (1) any common stock, long term warrant or preferred stock registered or admitted to unlisted trading privileges on either the American ("Amex") or New York ("NYSE") Stock Exchanges; (2) any common stock, long term warrant, or preferred stock registered on any exchange or admitted to unlisted trading privileges thereon which substantially meets either Amex or NYSE original listing requirements and (3) any right to acquire any of the securities described in (1) and (2) which is traded on the same exchange as such security. *See* Rule 11Aa3-1 under the Act, 17 CFR § 240.11Aa3-1.

[5] 17 CFR 240.11Ac1-1. The Quote Rule requires all national securities exchanges and associations to establish and maintain procedures for collecting from their members bids, offers and quotation sizes with respect to securities reported in the consolidated transaction reporting system ("consolidated system") and for making such bids, offers and sizes available to quotation vendors. It also requires that every exchange member and third market maker promptly communicate to his exchange or association, pursuant to procedures established by the exchange or association, his bids, offers, and quotation sizes. This is referred to as the "mandatory participation requirement" of the Quote Rule.

[6] The Quote Rule requires that, subject to certain exceptions, the broker or dealer responsible for communicating a quotation shall be obligated to execute any order to buy or sell presented to him, other than an odd-lot order, at a price comprising the responsible broker or dealer's published bid or offer in any amount up to his published quotation size. This is referred to as the "firmness requirement" of the Quote Rule.

[7] *See* text accompanying notes 11-14, *infra*.

[8] *See* text accompanying notes 23-26, *infra*.

[9] Rule 10a-1(a)(1). In addition, the Rule permits an exchange to elect to have the permissibility of short sales in reported securities determined by reference to the last sale on that exchange rather than by reference to the last sale reported in the consolidated system. Rule 10a-1(a)(2). To date, only the Amex and NYSE have made such elections. *See* Securities Exchange Act Release Nos. 12201 (March 12, 1976), 41 FR 11907, and 12357 (April 21, 1976), 41 FR 17633.

reported in the consolidated system regardless of whether that sale was on a zero-plus tick.[10]

The exception provided by paragraph (e)(5) of the Rule permitted market makers to effect short sales on a zero-minus tick, but did not permit short sales, either as dealer or agent, at a price lower than the last sale reported in the consolidated system (*i.e.*, on a minus tick). As a result, there was a potential conflict between the operation of Rule 10a–1 and the "firmness requirement" of the Quote Rule [11] in situations where execution of an offer by a particular broker or dealer would be rendered unlawful because of a subsequent trade-through even though the offer had been at a price permitted under Rule 10a–1 at the time when that broker or dealer had communicated it to his exchange or association for inclusion in the consolidated quotation system.

The following example illustrates the potential conflict: Assume that a market maker who currently has a short position in *XYZ* stock communicates an offer which, if executed against at that time, would be in compliance with Rule 10a–1, *e.g.*, at a price of 20⅛ when the last sale reported in the consolidated system is also 20⅛. Furthermore, assume that there is a "trade-through" [12] of the market maker's offer on another market center which causes an up-tick to be reported in the consolidated system at 20¼. Finally, assume that a buy order is sent to the market maker after the trade-through at 20¼ has been reported. Under these circumstances, in order to ensure compliance with Rule 10a–1, the market maker must refuse to execute the order at his offer of 20⅛ because doing so would result in a short sale being effected on an impermissible minus tick (*i.e.*, at a price below the price at which the immediately preceding last sale was effected). In refusing to effect the trade, however, he would arguably violate the "firmness requirement" of the Quote Rule. In addition, when a market maker "backs away" from an order, he would, in effect, be revealing that he had a short position in the security, thus making it more difficult to liquidate that position at favorable prices.

In order to resolve the conflict between the requirements of Rules 10a–1 and 11Ac1–1,[13] the Commission proposed an amendment to paragraph (e) of Rule 10a–1. The amendment would permit a market maker to effect short sales of a security at a price equal to the price associated with the market maker's most recent offer for that security communicated pursuant to the Quote Rule, if the price associated with that offer, when communicated, was equal to or greater than the last sale for such security reported in the consolidated system.[14]

In response to the Proposal Release, the Commission received comments from three exchanges, the NASD, Merrill Lynch, Pierce, Fenner & Smith, Inc. ("ML"), the American Bar Association ("ABA") and the Securities Industry Association ("SIA").[15] All of the commentators were generally in support of the proposed amendment. For example, the NYSE stated:

> The [NYSE] supports the proposed amendment to the equalizing exemption in the short sale rule as a further step designed to resolve trade-through related problems. Moreover, we concur that as a general matter the exemption should not present the potential for manipulative abuse that the rule was designed to prevent.[16]

However, several commentators indicated that the proposed amendment did not go far enough in addressing problems created by the Quote Rule and suggested that the proposed exemption be extended to non-market maker orders.[17] Specifically, these commentators noted that, in addition to orders for their own account, specialists and other floor members also represent, often as part of their displayed quotations, orders of other market participants (*e.g.*, public agency orders or proprietary orders of non-market makers) which also might be ineligible for execution under Rule 10a–1 following a trade-through in another market.[18] Accordingly, these commentators suggested that Rule 10a–1 should be further amended to allow such orders to be executed if they were otherwise in compliance with Rule 10a–1 at the time they were communicated by a responsible broker or dealer pursuant to the Quote Rule. In addition, ML proposed that the Rule be further modified to permit what it termed "passive" short selling, *i.e.*, to permit any market maker to lower its current offer and execute orders at that price even if the execution were to result in a trade on a minus tick without a trade-through.[19] ML contended that this proposed revision would narrow spreads and enhance competition

---

[10] Rule 10a–1(e)(5). An exchange may, however, prohibit use of the equalizing exemption by its registered specialists and market makers. To date, only the NYSE has done so.

[11] 17 CFR § 240.11Ac1–1(c)(2).

[12] The term "trade-through" generally refers to the execution of an order in one market center at a price inferior to that being displayed by another market center. It should be noted that, with respect to trade-throughs effected on market centers linked through the Intermarket Trading System ("ITS"), the Commission has taken the position that such trade-throughs constitute "unacceptable behavior." Moreover, the Commission has directed the ITS participants to take prompt action to resolve the trade-through problem. *See* Securities Exchange Act Release No. 15671 (March 22, 1979), 44 FR 20360.

[13] This conflict does not currently exist with respect to short sales effected on the NYSE because, as noted above, *see* notes 9 and 10, *supra*, this exchange uses only last sale reports from its own market to measure compliance with Rule 10a–1 and therefore would not be affected by trade-throughs effected in other markets.

[14] Securities Exchange Act Release No. 16964 (July 8, 1980) ("Proposal Release"), 45 FR 47159. It is the Commission's understanding that such an amendment also would ensure that the National Association of Securities Dealers' ("NASD") NASDAQ System, which is presently being upgraded and enhanced to include an automated execution facility, could be operated in compliance with Rule 10a–1. The enhanced NASDAQ System is expected to begin operation, on a pilot basis, in the near future.

[15] Letter from Warren F. Gruenenberger, Chairman, Federal Regulation of Securities Committee, and John M. Liftin, Chairman, Subcommittee on Securities Markets and Market Regulation, Section of Corporation, Banking, and Business Law, ABA, to George A. Fitzsimmons, Secretary, SEC, dated September 15, 1980 ("ABA Letter"); letter from William A. Schreyer, President, ML, to George A. Fitzsimmons, Secretary, SEC, dated August 25, 1980 ("8/25/80 ML Letter"); letter from Allan A. Bretzer, Vice President, Market Regulation, Midwest Stock Exchange, Inc. ("MSE"), to George A. Fitzsimmons, Secretary, SEC, dated September 10, 1980 ("MSE Letter"); letter from Gordon S. Macklin, President, NASD, to George A. Fitzsimmons, Secretary, SEC, dated August 25, 1980 ("NASD Letter"); letter from Charles Forman, First Vice President, Equities Division, Pacific Stock Exchange, Inc. ("PSE"), to George A. Fitzsimmons, Secretary, SEC, dated September 8, 1980 ("PSE Letter"); letter from Joseph McLaughlin, Chairman, Federal Regulation Committee, SIA, to George A. Fitzsimmons, Secretary, SEC, dated August 25, 1980 ("SIA Letter"). These comments are contained in the Commission's Public File No. S7–842.

[16] NYSE Letter, *id.* at 2. The NYSE also noted that it would be appropriate for self-regulatory organizations to monitor trading activity pursuant to the amendment. *Id.*

[17] ABA Letter, *supra* note 15, at 2; MSE Letter, *supra* note 15, at 2; and PSE Letter, *supra* note 15, at 1.

[18] The PSE illustrated its concern with the following hypothetical:

> A PSE specialist who is short *XYZ* stock quotes an offer for 1,000 shares at 20⅛ at a time when the last sale reported in the consolidated system was such that the offer, if executed at that time, would be in compliance with Rule 10a–1. This offer for 1,000 shares consists of 300 shares offered by the specialist, a 400 share limit order in the specialist's book, and an offer from the crowd at the specialist's post for 300 shares, all at 20⅛. A "trade-through" of this offer occurs on another exchange and an up-tick is reported in the consolidated system at 20¼. A buy order for 1,000 shares at 20⅛ is then sent to PSE—after the trade-through at 20¼ is reported. Under the current statement of the exemption provision of the proposed amendment, it would seem that filling the complete order for 1,000 shares is not permissible, since the exemption, by its terms, applies only to a sale by a market maker for its own account.

PSE Letter, *supra* note 15, at 1.

[19] 8/25/80 ML Letter, *supra* note 15, at 1–3. ML previously had raised its proposal in connection with the Commission's proposed Rule to designate national market system securities. *See* letter from William A. Schreyer, President, ML, to George A. Fitzsimmons, Secretary, SEC, dated August 13, 1979, contained in Public File No. S7–787.

between market makers who are long and those who are short.

B. Discussion

After analyzing these comments, the Commission has determined to adopt the proposed amendment modified to permit non-market maker orders to be executed following trade-throughs. Specifically, in addition to amending paragraph (e)(5) to permit market makers to execute transactions at their offer following a trade-through, the Commission has added paragraph (e)(11) to Rule 10a-1 which provides, in substance, that a broker-dealer may effect a short sale at a price equal to the price associated with his most recently communicated offer up to the size of that offer [20] so long as the offer was at a price which, when communicated, was permissible under Rule 10a-1.[21] In light of the fact that executions pursuant to these new exemptions would occur almost exclusively as the result of trade-throughs, the Commission does not believe that these amendments provide an opportunity for the type of manipulation the Rule was designed to prevent.[22]

With respect to the ML proposal, the Commission recognizes that by limiting the application of the amendments to trade-through situations, market makers who have flat or short positions may often be limited in their ability to compete with market makers with long positions. However, the Commission is particularly concerned that such a revision also might substantially increase the opportunities for market makers to manipulate the price of a security. The Commission is particularly concerned that, with respect to securities for which the spreads may be a ¼ of a point or greater, the proposed revision might eliminate most practical restraints on short selling by market makers. As a result, the Commission believes it would be inappropriate, in view of the potential for manipulative abuse, to adopt ML's proposed revision at this time.

II. Definition of the Term Third Market Maker.

In addition to revising the equalizing exemption, the Commission also proposed a new definition of the term "third market maker." At present, the term "third market maker" is limited to those over-the-counter dealers [23] who have filed notice of their exempt credit status on Form X-17A-16(1) under the Act.[24] Because this definition restricts the availability of exceptions to Rule 10a-1 in circumstances which do not appear to raise any manipulative concerns, the Commission proposed to revise the definition to base it, in large part, on the definition provided in the Quote Rule.[25] In so doing, the Commission noted that, in light of the mandatory participation requirement of the Quote Rule, the exceptions contained in paragraphs (e)(3), (e)(4) and (e)(5) of Rule 10a-1 would be available, with respect to short sales of reported securities, only if an over-the-counter dealer communicates quotations for such a reported security to the NASD pursuant to the Quote Rule.[26]

All of the commentators who discussed the proposed definition supported the new definition.[27] The ABA believed that by "eliminat[ing] the indirect regulatory constraints on the activities of third market makers currently imposed by the existing exemption * * * the proposed amendment will provide an enhanced opportunity for third market markets to compete in a national market system environment * * *." [28] In addition, the SIA "specifically agree[d] with the Commission that a dealer's short sales of a reported security should be eligible for the exemptions from Rule 10a-1 applicable to transactions by third market makers only if the dealer communicates quotations for that security in accordance with Rule 11Ac1-1." [29] In light of these comments and the absence of any significant

[20] The Commission has determined to limit the scope of the non-market maker exception to the size of the broker or dealer's displayed offer because the need for the exception only arises to the extent that the broker or dealer's obligations under the Quote Rule may conflict with Rule 10a-1. Because the firmness requirement of the Quote Rule only applies to a broker or dealer's displayed offer, it appears appropriate to limit the exception to the size of such displayed offer. A similar limitation has not been included for market maker trading pursuant to the equalizing exception because that exception, itself, would allow a market maker to continue to offer stock at the last sale price reported in the consolidated system following any completed transaction.

[21] Of course, executions pursuant to new paragraph (e)(11) for the account of a non-market maker member of an exchange must also comply with Section 11(a) of the Act, which regulates proprietary transactions by exchange members.

[22] The Commission also notes two related matters. First, while the Commission's action today resolves the conflict, occasioned by the occurrence of trade-throughs, between Rules 10a-1 and 11Ac1-1, the Commission continues to believe that trade-throughs are inconsistent with the goals and objectives of a national market system. Thus, the Commission welcomes the NYSE's efforts to "continue to reduce the problem. . . ." NYSE Letter, *supra* note 15, at 1. In this connection, the Commission notes that the ITS Operating Committee has created a Rules Subcommittee authorized to draft rules, which would be adopted by each ITS participant, addressing the trade-through problem. The Commission is encouraged by these developments and would urge the ITS participants to resolve the trade-through issue themselves. However, if significant progress is not made within the next few months on the adoption of self-regulatory rules which would have the effect of substantially eliminating trade-throughs and creating adequate remedies for persons disadvantaged by trade-throughs, the Commission remains prepared to take direct regulatory action, on its own initiative, to address the trade-through problem.

Second, in the Proposal Release (*supra* note 14, at 6 n.11, 45 FR at 47159 n.11) the Commission noted its concern that by amending Rule 10a-1 the Commission might reduce the incentives for third market makers to update their quotations. In this regard, the Commission reaffirmed its view "that such behavior raises serious questions under the Quote Rule, which requires responsible brokers and dealers to 'promptly communicate' their bids, offers and quotations sizes." The Commission expects the NASD to continue to pursue a comprehensive program to ensure third market maker compliance with the Quote Rule. Therefore, it does not appear necessary to defer adoption of the Rule 10a-1 amendments due to concerns regarding compliance with Quote Rule. *Cf.* SIA Letter, *supra* note 15, at 2 ("Effective self-regulatory action [should be] * * * sufficient to preserve the quality of quotations.").

[23] *See* Rule 10a-1(e)(3), (e)(4) and (e)(5).

[24] 17 CFR 249.631. Form X-17A-16(1) incorporates by reference the definition of the term "third market maker" contained in Rule 17a-16(c) under the Act, 17 CFR § 240.17a-16(c). That Rule defines the term "Qualified Third Market Maker" to mean:

[A] dealer who is subject to and is in compliance with Rule 15c3-1 (or is subject to and in compliance with the capital rules of an exchange of which he is a member if the members thereof are exempt from Rule 15c3-1 by subparagraph (b)(2) thereof) and who has and maintains mimimum net capital as defined in Rule 15c3-1 (or in such capital rules of such exchange) of $100,000 plus $20,000 for each security in excess of five in respect of which he has filed and not withdrawn that notice on Form X-17A-16(1) (except that he shall not be required to have such net capital or more than $500,000 to be a Qualified Third Market Maker under the provisions of this rule); and who, except when such activity is unlawful, meets all of the following conditions with respect to such security: (1) he furnishes bona fide, competitive bid and offer quotations at all times to other brokers or dealers on request; (2) he is ready, willing and able to effect transactions for his own account in reasonable amounts, and at his quoted prices with other brokers and dealers; and (3) he has a reasonable average rate of inventory turnover in such security.

[25] Rule 11Ac1-1(a)(1) defines the term "third market maker" to mean:

[A]ny broker or dealer who holds himself out as being willing to buy and sell a reported security for his own account on a regular and continuous basis otherwise than on a national securities exchange in amounts of less than block size (including any such person who also represents, as agent, orders to buy or sell reported securities on behalf of any other person and communicates bids and offers to a national securities association * * * pursuant to this section on behalf of such other persons as well as for his own account).

[26] *See* Proposal release, *supra* note 14, at 7 n.13, 45 FR at 47160 n.13. Briefly, those exceptions contemplate, in addition to the equalizing exemption, short sales by a third market maker to offset odd-lot orders by customers or to liquidate a long position which is less than a round lot, provided such sale does not change the position of such market maker by more than one unit of trading.

[27] *See* ABA Letter, *supra* note 15, at 2-3; 8/25/80 ML Letter, *supra* note 15, at 3; NASD Letter, *supra* note 15, at 1; and SIA Letter, *supra* note 15, at 2.

[28] ABA Letter, *supra* note 15, at 2-3.

[29] SIA Letter, *supra* note 15, at 2. As indicated in note 6 *supra*, all third market makers in reported securities are currently required to make their bids

Footnotes continued on next page

manipulative concerns, the Commission has determined to adopt the new definition of the term "third market maker" as proposed.[30]

III. Effects on Competition

Section 23(a)(2) of the Act requires the Commission, in taking regulatory action under the Act, to consider the anticompetitive effects of such regulation and to balance any anticompetitive impacts against the regulatory benefits gained in terms of furthering the purposes of the Act.

While there was limited commentary on the relationship between the amendments and competition, the ABA stated its belief that the amendments, in part, will provide an enhanced opportunity for third market makers to compete in a national market system environment and the MSE supported the amendments, in part, on the grounds that it would further the continuing development of a competitive national market system. Moreover, no adverse comments were received indicating that the amendments might burden competition. Given the goal of the amendments to allow persons to comply more effectively with both the Quote Rule and Rule 10a-1, the Commission finds that the amendments do not impose a burden on competition which is neither necessary nor appropriate in furtherance of the purposes of the Act.

IV. Procedural Matters

Section 553 of the Administrative Procedure Act ("APA") permits an agency rule to be made effective in less than 30 days after publication of the rule in the Federal Register where (1) the adopted rule grants or recognizes an exemption or relieves a restriction, or (2) the agency for good cause, determines to adopt a rule with a more immediate effective date and publishes its reasons for so finding.[31] On both of these bases, the Commission has determined to adopt the amendments to Rule 10a-1 with an effective date of November 20, 1980. First, the amendments to Rule 10a-1 expand the availability of the equalizing exemption and the number of third market makers who may qualify for various other exceptions to the Rule. Second, the Commission has determined that good cause exists to conclude that the amendments should be effective immediately because they will resolve a potential regulatory conflict which might otherwise cause certain market makers to violate inadvertently a Commission rule.[32] Thus, the amendments further the public interest, the protection of investors, and the maintenance of fair and orderly markets. The amendments, therefore, will be effective immediately.

V. Statutory Basis and Text of Rule

The Securities and Exchange Commission hereby amends Title 17, Chapter II, of the Code of Federal Regulations, pursuant to its authority under the Securities Exchange Act of 1934 [33] and particularly Sections 2, 3, 6, 9, 10, 11A, 15, 15A, 17 and 23 [34] thereof, by amending paragraphs (e)(3), (e)(4), (e)(5), (e)(9) and (e)(10) [35] of § 240.10a-1 and adding paragraphs (e)(11) and (e)(12) to read as follows:

PART 240—GENERAL RULES AND REGULATIONS, SECURITIES EXCHANGE ACT OF 1934.

§ 240.10a-1 Short sales.

* * * * *

(e) * * *

(3) Any sale by an odd-lot dealer on an exchange with which it is registered for such security, or any over-the-counter sale by a third market maker to offset odd-lot orders of customers;

(4) Any sale by an odd-lot dealer on an exchange with which it is registered for such security, or any over-the-counter sale by a third market maker to liquidate a long position which is less than a round lot, provided such sale does not change the position of such odd-lot dealer or such market maker by more than the unit of trading;

(5) Any sale of a security covered by paragraph (a) of this section (except a sale to a stabilizing bid complying with § 240 10b-7) by a registered specialist or registered exchange market maker for its own account on any exchange with which it is registered for such security, or by a third market maker for its own account over-the-counter,

(i) Effected at a price equal to or above the last sale, regular way, reported for such security pursuant to an effective transaction reporting plan; or

(ii) Effected at a price equal to the most recent offer communicated for the security by such registered specialist, registered exchange market maker or third market maker to an exchange or a national securities association ("association") pursuant to § 240.11Ac1-1, if such offer, when communicated, was equal to or above the last sale, regular way, reported for such security pursuant to an effective transaction reporting plan;

Provided, however, That any exchange, by rule, may prohibit its registered specialist and registered exchange market makers from availing themselves of the exemption afforded by this paragraph (e)(5) if that exchange determines that such action is necessary or appropriate in its market in the public interest or for the protection of investors;

* * * * *

(9) Any sale of a security registered on, or admitted to unlisted trading privileges on, a national securities exchange effected in accordance with a special offering plan declared effective by the Commission pursuant to paragraph (d) of § 240.10b-2;

(10) Any sale by an underwriter, or any member of a syndicate or group participating in the distribution of a security, in connection with an over-allotment of securities, or any lay-off sale by such a person in connection with a distribution of securities through rights pursuant to § 240.10b-8 or a standby underwriting commitment; or

(11) Any sale of a security covered by paragraph (a) of this section (except a sale to a stabilizing bid complying with § 240.10b-7) by any broker or dealer, for his own account or for the account of any other person, effected at a price equal to the most recent offer communicated by such broker or dealer to an exchange or association pursuant

---

Footnotes continued from last page

and offers for such securities available to the NASD on a current basis in accordance with the provisions of the Quote Rule.

[30] As adopted, the term "third market maker", for purposes of Rule 10a-1, shall mean: any dealer who, with respect to a particular security, holds itself out as being willing to buy and sell such security for its own account on a regular and continuous basis otherwise than on an exchange in amounts of less than block size and who has filed a report for such security on Form X-17A-9(1) [17 CFR § 249.917(1)].

Rule 10a-1(e)(12). Form X-17A-9(1) requires postcard notification of activity in a particular security.

[31] 5 U.S.C. 553(d)(1), (3) (1977).

[32] In this connection, the Commission would note that the NASD anticipates that its enhanced NASDAQ System may be operational, on a pilot basis, in the near future. Thus, once that system is functioning, market makers would be subject to the possibility of automatic executions which, as noted above, might violate Rule 10a-1. *See* note 14, *supra.*

[33] 15 U.S.C. 78a *et seq.*, as amended by Pub L. No. 94-29 (June 4, 1975).

[34] 15 U.S.C. 78b, 78c, 78f, 78s, 78j, 78k-1, 78o, 78o-3, 78q and 78w.

[35] The changes to paragraphs (e)(9) and (e)(10) are nonsubstantive and involve deleting the connective conjunction "or" from paragraph (e)(9) and inserting it at the end of paragraph (e)(10). In addition, the Commission has revised the language of the equalizing exemption generally to conform it with prior Commission interpretations and the securities industry's common understanding of the exemption by adding the phrase "regular way" to paragraphs (e)(5)(i), (e)(5)(ii) and (e)(11) of the Rule. These revisions make clear that the equalizing exemption generally and the amendments adopted today could not be invoked based on a last sale report of a transaction other than regular way (*e.g.*, a cash sale) because such transactions are often at prices which may differ significantly from the general regular way market for a security. The Commission finds, in accordance with the APA, 5 U.S.C. § 553(b)(3)(B), that because these revisions only clarify the Commission's prior interpretation of Rule 10a-1, good cause exists to conclude that notice and public proceedings are not necessary.

to § 240.11Ac1-1 in an amount less than or equal to the quotation size associated with such offer, if such offer, when communicated, was (i) above the price at which the last sale, regular way, for such security was reported pursuant to an effective transaction reporting plan; or (ii) at such last sale price, if such last sale price is above the next preceding different price at which a sale of such security, regular way, was reported pursuant to an effective transaction reporting plan.

(12) For the purposes of paragraph (e)(8) of this section, a depositary receipt of a security shall be deemed to be the same security as the security represented by such receipt. For the purposes of paragraphs (e) (3), (4) and (5) of this section, the term "third market maker" shall mean any dealer who, with respect to a particular security, holds itself out as being willing to buy and sell such security for its own account on a regular and continuous basis otherwise than on an exchange in amounts of less than block size and who has filed a report for such security on Form X-17A-9(1) [§ 249.917(1) of this chapter].

* * * * *

(Secs. 2, 3, 6, 9, 10, 15, 17 and 23, Pub. L. No. 78-291, 48 Stat. 881, 882, 885, 889, 891, 895, 897 and 901, as amended by secs. 2, 3, 4, 11, 14 and 18, Pub. L. No. 94-29, 89 Stat. 97, 104, 121, 137 and 155 (15 U.S.C. §§ 78b, 78c, 78f, 78i, 78j, 78o, 78q, and 78w); Sec. 15A, as added by sec. 1, Pub. L. No. 75-719, 52 Stat. 1070, as amended by sec. 12, Pub. L. No. 94-29, 89 Stat. 127 (15 U.S.C. § 78o-3); Sec. 11A, as added by sec. 7, Pub. L. No. 94-29, 89 Stat. 111 (15 U.S.C. § 78k-1))

By the Commission.

George A. Fitzsimmons,

Secretary.

November 20, 1980.

[FR Doc. 80-37106 Filed 11-26-80; 8:45 am]

BILLING CODE 8010-01-M

---

17 CFR Part 250

[Release No. 35-21797; File No. S7-847]

Rule To Exempt Certain Nonutility Subsidiaries and Affiliates Under the Public Utility Holding Company Act of 1935

AGENCY: Securities and Exchange Commission.

ACTION: Final rule.

SUMMARY: The Commission is adopting Rule 16 under the Public Utility Holding Company Act of 1935 ("Act") to exempt a subsidiary or an affiliate of a registered holding company, primarily engaged in the production, manufacture, transmission or storage of gas, from the duties, liabilities and obligations imposed under the Act on "subsidiary companies" or "affiliates" if no more than 50% of the voting securities of or other voting interests in such subsidiary or affiliate are owned, directly or indirectly, by one or more registered holding companies. The rule also exempts affiliates of the exempted subsidiary or affiliate.

The exemption is intended to eliminate an impediment to participation by gas utility systems of registered holding companies under the Act in joint ventures or projects with others not subject to the Act for the purpose of providing non-utility facilities necessary or appropriate to the business of the registered holding company by exempting the joint venture or project company, whether a corporation or partnership, and its affiliates, from the regulatory provisions of the Act.

EFFECTIVE DATE: November 28, 1980.

FOR FURTHER INFORMATION CONTACT: Aaron Levy, Director, or Grant Guthrie, Associate Director, Division of Corporate Regulation, Securities and Exchange Commission, 500 North Capitol Street, Washington, D.C. 20549, (202) 523-5691 or 523-5156.

SUPPLEMENTARY INFORMATION: The Commission today announced the adoption of Rule 16 pursuant to Section 3(d) of the Act to exempt certain non-utility ventures or projects from the provisions of the Act that might otherwise apply to such project companies as "subsidiary companies" or "affiliates" of registered holding companies. The exemption is intended to facilitate participation by registered holding companies in such ventures provided that no more than 50% of the voting interests in the project company are owned by one or more registered holding companies.

Section 2(a)(7) of the Act defines a "holding company" as any company which owns 10% or more of the voting securities of a "public utility company," which, as defined in Section 2(a)(5), includes an "electric utility company" defined in Section 2(a)(3) or a "gas utility company" defined in Section 2(a)(4). A "gas utility company," as therein defined, is a company engaged in the *retail distribution* of natural or manufactured gas. Companies engaged in the manufacture or production of gas, or its transmission, are not gas utility companies within the meaning of Section 2(a)(4), and the owners of such companies are not "holding companies." The statutory definition of an "electric utility company," on the other hand, includes generation and transmission of electric energy, as well as its retail distribution. Hence a company which owns 10% or more of the voting securities of a company engaged in the generation or transmission of electric energy is a holding company as defined in Section 2(a)(7). In terms of the Act, there is a fundamental difference between what constitutes a gas utility system and an electric utility system.

Two applications under the Act, pending before the Commission, relate to joint projects, one for the construction of a plant to manufacture synthetic gas, the other for the construction of major new pipelines.[1] Each is intended to provide gas to multiple pipeline systems from heretofore unavailable sources for resale in existing markets. These projects have been organized as joint ventures or project companies which will own and operate the facilities in question. The recent passage of the Energy Security Act of 1980 (P.L. 96-294), Title I of which is directed to promoting the development of a synthetic fuels industry in the United States, and other developments in the industry suggest that this kind of joint venture may be the prototype for other similar projects.

There are currently three gas utility holding company systems registered under the Act, two of which also own major gas transmission subsidiaries.[2] The three systems represent about 8½% of the total gas industry, counting both pipelines and retail distribution systems. Significant joint ventures of the kind described above will involve principally pipeline or production or other energy companies that are non-utilities and are not member companies of registered holding companies. The regulatory requirements of the Act would not apply to them or the project company, a non-utility, in which they may join, unless a participating member is a registered holding company or a subsidiary company thereof.

Rule 16 was published for comment on August 21, 1980, in HCAR No. 21685 (45 FR 57486, August 28, 1980). Seven letters of comment were submitted, all favoring the objective of the rule and suggesting amendments. Rule 16 as adopted includes in part some changes in light of the comments and has been clarified in other respects.

The regulatory provisions of the Act apply to a registered holding company and to each of its subsidiaries, whether utility companies or not. Section

---

[1] *Columbia Gas System, Inc.*, application pending in File No. 70-6419; and *Columbia Gas System, Inc.*, HCAR No. 21771 (October 31, 1980).

[2] There are also three registered holding companies which are predominantly, by far, electric utility systems but which to some or minor extent include utility facilities for retail distribution of natural gas.

2(a)(8)(A) defines a "subsidiary company" as any company 10% of whose voting securities are owned by another company. Accordingly, if a group of companies undertakes a non-utility project, such as construction of a pipeline or a synthetic fuel facility, the project company would be subject to regulation under the Act, including Section 7 that governs securities issues, if the registered holding company acquired 10% or more of its voting securities. Further, Section 2(a)(11) defines an "affiliate" of a company to include in subparagraph (B) any company if 5% or more of its voting securities are owned, directly or indirectly, by such company. There are several provisions of the Act that relate to affiliates of a registered holding company or a subsidiary thereof, such as, for example, Sections 12(f), 13(e) and 15(b).

In view of these statutory consequences, a registered holding company might find it difficult to attract potential co-venturers, to join it in a venture which without the participation of the registered holding company, neither the joint venture nor the other participants would be subject to the Act at all. Rule 16 is meant to eliminate this impediment or disadvantage for the benefit of a registered holding company system. The Commission does not perceive the exemption under Rule 16 as contrary to the purposes of the Act when 50% or more of the joint venture or project company is owned, through its voting securities, by participating companies to whom the Act does not apply. Subsection (a)(2) of the rule expressly specifies that no more than 50% of the voting securities shall be owned or controlled, directly or indirectly, by one or more registered holding companies. If such ownership exceeds this percentage, the project company is deemed to be part of the regulated system or systems and subject to the requirements of the Act like any other subsidiary or affiliate of a registered holding company.

Rule 16, as published for comment (HCAR No. 21685), proposed to exempt the project company from "the obligations, duties or liabilities" imposed upon it as a subsidiary company. That is not the full exemption Rule 16 intended to provide. So drafted, Rule 16 left an unintended question that the rule should answer explicitly. It should be understood that the exemption as a subsidiary would be sufficient to include such company's lesser obligations as an "affiliate." But to a literal reader, Rule 16 as published might have suggested that a project company, though exempt as a subsidiary defined in Section 2(a)(8)(A), would still remain an affiliate under Section 2(a)(11)(B) and be subject to the requirements the Act imposes upon an affiliate of a registered holding company. Rule 16, as adopted, clarifies that the exemption, as Section 3(d) permits, extends to such company as an affiliate as well.

Some of the comment letters suggest that the Rule 16, as proposed, was not complete in another respect. Such commentators state that, although the rule, as proposed, would exempt the project company from the duties and obligations as a subsidiary of a registered holding company, the project company would continue and remain, by definition, a subsidiary thereof as defined in Section 2(a)(8)(A). As a consequence, those commentators state, any of the participants who own 5% or more of the voting stock of the project company, or even a director or an officer,[3] would be affiliates of a subsidiary of a registered holding company and thus subject to the provisions of the Act that would apply to affiliates. Thus, these commentators recommend that Rule 16 be amended to state that any company exempted by the rule shall not be deemed to be a subsidiary company under any provisions of the Act.

We do not believe the regulatory requirements of the Act—as distinguished from the bare definitions—would apply to affiliates of a project company when the project company is exempt from regulation under the Act as a subsidiary or affiliate, and therefore we are adopting the substance of the recommended proposal. Rule 16, as adopted, provides that the project company shall be exempt from any obligations, duties or liabilities as a subsidiary or an affiliate under any of the provisions of the Act.[4] It provides also that the exemption extends to each affiliate of the project company, but in the exemptive terms of Section 3(d).

Subsection (a)(2) of the rule provides, as one of the conditions for the exemption, that the company shall engage primarily in the exploration, development, production, manufacture, storage, transportation or supply of natural or synthetic gas. The exempted company must be "primarily," not exclusively, so engaged. It is certainly not precluded from other business ventures related to its primary function or purpose. It may, for example, develop oil reserves that are generally found or associated with exploration for natural gas.[5] A company engaged in coal gasification may acquire and develop coal reserves essential for its purpose. The underlying objective of the exemption is to facilitate the development and delivery of the supply of natural or synthetic gas. Random or indiscriminate diversification would raise some doubts concerning whether the exemption under Rule 16 applies and even more critical questions on whether the acquisition by the registered holding company system would satisfy the provisions of Sections 9(a)(1) and 10. It is not unrealistic, though, to assume that, as the participants have joined in the venture to serve their common needs, it is more than likely that the project company will stay on the course charted for it by its organizers.

Subsection (a)(4) of the rule requires that the acquisition by the registered holding company be approved by Commission order on a timely application filed pursuant to Sections 9(a)(1) and 10 of the Act. Section 9(a)(1) states that it is unlawful for a registered holding company or any subsidiary company thereof to acquire "any other interest in any business" unless the acquisition is approved under the standards of Section 10, which, among other things, requires a determination by the Commission that the acquisition is not detrimental to Section 11. This calls for a finding that the acquisition of its interest in the joint venture is functionally related to the utility business of the registered holding company system, or, in the words of Section 11(b)(1), that its interest in the project company "is reasonably incidental, or economically necessary or appropriate to the operations" of the system. If the acquisition is to be financed by the issue and sale of securities, their issue and sale must satisfy the requirements of Sections 6 and 7. All of these requirements provide full assurance that the growth or extension of the registered holding company system, including the acquisition under this rule, and its financial or capital structure, shall comply with all the pertinent standards prescribed by the Act.

One comment letter, submitted by New England Electric System, a registered holding company with a substantial electric utility system, agrees in principle with Rule 16 but proposes some revisions. It recommends just that

[3] Section 2(a)(11)(C) defines an "affiliate" of a company to include an officer or director of such company.

[4] Section 3(d) refers to "persons," but Section 2(a)(1) defines a person to mean "an individual or company."

[5] *Columbia Gas and Electric Corporation*, 17 SEC 494, 506–09 (1944).

the rule be amended to include joint ventures whose primary purpose is the exploration and development of oil and coal and other non-utility ventures, so that a registered holding company with an electric utility system may benefit from the rule by participating in joint projects to secure such fuels for its generating facilities.

The acquisition by electric utilities of captive or affiliated sources of fuel supply has led to considerable controversy about the cost, economies, and other presumed advantages of the acquisitions. Such acquisitions are of special concern to utility commissions, which, among other things, have been particularly troubled about how the price the electric utility pays to its fuel affiliate, not an arm's-length transaction, should be considered under fuel adjustment clauses. In these circumstances, the Commission does not believe it appropriate to adopt an exemptive rule to encourage the development of these sources of fuel supply and therefore is not incorporating such revisions into Rule 16. Moreover, the proposed expansion of the rule would require republication for comment and would necessarily involve an indefinite delay in promulgating Rule 16, which, within present bounds, is ready for adoption now.

Statutory Basis and Text of the Rule

The Securities and Exchange Commission hereby amends Title 17, Chapter II of the Code of Federal Regulations, pursuant to its authority under the Public Utility Holding Company Act of 1935 [15 U.S.C. 79a *et seq.*] and particularly Sections 3(d) and 20 (a) thereof [15 U.S.C. 79c(d) and 79t(a)] by adding § 250.16 to read as set forth below. This action is effective immediately pursuant to the Administrative Procedure Act [5 U.S.C. 553(d)(1)].

PART 250—GENERAL RULES AND REGULATIONS, PUBLIC UTILITY HOLDING COMPANY ACT OF 1935

§ 250.16 Exemption of non-utility subsidiaries and affiliates.

(a) Any company, and each affiliate thereof, shall be exempt from all obligations, duties or liabilities imposed upon it by the Act, as a subsidiary company or as an affiliate of a registered holding company or of a subsidiary company thereof, as such terms are respectively defined in sections 2(a)(8)(A) and 2(a)(11) of the Act, if—

(1) Such company is not a public utility company as defined in section 2(a)(5) of the Act;

(2) Such company is or has been organized to engage primarily in the exploration, development, production, manufacture, storage, transportation or supply of natural or synthetic gas;

(3) No more than 50% of its voting securities or other voting interests are owned, directly or indirectly, by one or more registered holding companies; and

(4) The acquisition by the registered holding company or subsidiary thereof of its interest in such company has been approved by the Commission pursuant to sections 9(a)(1) and 10 of the Act and applicable rules thereunder upon a timely application to the Commission.

(b) The exemption provided by this rule shall continue in effect during the pendency of such application. If an acquisition is made subject to Commission approval, the exemption provided by this rule is not terminated if the Commission does not grant its approval. In that event any such acquisition shall be disposed of in accordance with the order of the Commission.

(c) If a registered holding company directly or indirectly acquires any voting securities of such company, or any other voting interest, pursuant to this rule, the holding company shall include as an exhibit to its annual report on Form U5S a copy of the annual report of such company. It may incorporate by reference the annual report such company is required to file pursuant to other statutes administered by the Commission.

(d) This rule does not affect the authority of any agency having jurisdiction over rates with respect to a company exempt under this rule, including authority over affiliate transactions by or with such company pursuant to the laws administered by that agency.

By the Commission.

George A. Fitzsimmons,

Secretary.

November 19, 1980.

[FR Doc. 80-37105 Filed 11-26-80; 8:45 am]

BILLING CODE 8010-01-M

DEPARTMENT OF ENERGY

Federal Energy Regulatory Commission

18 CFR Part 375

[Docket No. RM81-5; Order No. 112]

Rule Revision Subdelegation Authority

November 21, 1980.

AGENCY: Federal Energy Regulatory Commission, DOE.

ACTION: Final rule.

SUMMARY: The Federal Energy Regulatory Commission revises its rules of practice and procedure to permit an official to whom the Commission has delegated certain functions under Part 375 to subdelegate the authority to carry out those functions to the deputy of such official, to the head of a division, or a comparable official.

EFFECTIVE DATE: November 21, 1980.

FOR FURTHER INFORMATION CONTACT: Christine R. Benagh, Staff Attorney, Regulatory Development, Office of the General Counsel, Federal Energy Regulatory Commission, 825 North Capitol Street NE., Washington, D.C. 20426, (202) 357-8062.

The Federal Energy Regulatory Commission (Commission) hereby revises its rules of practice and procedure relating to delegations, to permit subdelegations of authority previously delegated to certain officials by the Commission.

I. Background and Discussion

The Commission, in the past, has delegated to specific Commission officials certain of its ministerial regulatory functions, which appear in Part 375, Subpart C, of the Commission's rules and regulations. The officials who carry out these delegated functions include the Secretary of the Commission, the Chief Accountant, the Director of the Office of Pipeline and Producer Regulation, the Director of the Office of Electric Power Regulation, and the Solicitor. Before the revision promulgated herein, these officials could subdelegate these functions only in the event of their absence. The Commission believes that permitting subdelegation only when such officials are absent may hinder efficient administration of its duties and responsibilities.

Therefore, the rules of the Commission are being revised, in the interest of efficient administration, to delete the limitations which permit a subdelegation only when the delegatee of the Commission is absent. The subpart on delegations is also being amended to clarify to which officials a subdelegation may be made: the deputy of the Commission's delegatee, the head of a division, or a comparable official.

In consideration of the foregoing, the Commission is revising its rules to permit subdelegations, under Part 375, Subpart C of its rules of practice and procedure, to certain classes of Commission officials even when the Commission's delegatee is not absent.

II. Public Procedures and Effective Date

Since this rule concerns a matter of agency practice and procedure, notice and public comment thereon is unnecessary pursuant to 5 U.S.C. 553(b). The Commission believes that the delegated functions, which appear in Part 375, Subpart C, of the Commission's regulations, will be administered more easily and more efficiently if this rule is made effective as soon as possible. Therefore, the Commission finds that good cause exists pursuant to 5 U.S.C. 553(d)(3) to make this rule effective immediately.

(Department of Energy Organization Act, (42 U.S.C. 7107 *et seq.;* Federal Power Act, (16 U.S.C.), 791–828c), as amended; Natural Gas Act, (15 U.S.C. 717–717w), as amended; Natural Gas Policy Act of 1978, (15 U.S.C. 3301 *et seq.);* Public Utilities Regulatory Policies Act of 1978, (16 U.S.C. 2601 *et seq.);* Exec. Order No. 12009, 3 CFR 142 (1978))

In consideration of the foregoing, the Commission amends Subpart C, Part 375, Subchapter W, Chapter I, Title 18 of the Code of Federal Regulations as set forth below, effective November 21, 1980.

By the Commission.

Kenneth F. Plumb,

Secretary.

1. Part 375 is amended in the table of contents and in the text of the regulations of § 375.301 to read as follows:

§ 375.301 Purpose and subdelegations.

(a) The purpose of this subpart is to set forth the authorities that the Commission has delegated to staff officials. Any action by a staff official under the authority of this subpart may be appealed to the Commission in accordance with § 1.7(d) of this chapter.

(b) Where the Commission, in delegating functions to specified Commission officials, permits an official to further delegate those functions to a designee of such official, "designee" shall mean the deputy of such offical, the head of a division, or a comparable official as designated by the official to whom the direct delegation is made.

§ 375.302 [Amended]

3. Section 375.302 is amended in the first sentence to delete "in the Secretary's absence,".

§ 375.303 [Amended]

4. Section 375.303 is amended in the first sentence to delete "in the Chief Accountant's absence,".

§ 375.305 [Amended]

5. Section 375.305 is amended in the first sentence to delete "in the Solicitor's absence,".

§§ 375.307—375.310 [Amended]

6. Sections 375.307, 375 308, 375.309, and 375.310, are each amended in the first sentence to delete "in the Director's absence,".

[FR Doc. 80-37040 Filed 11-26-80; 8:45 am]

BILLING CODE 6450-85-M

DEPARTMENT OF COMMERCE

International Trade Administration

19 CFR Part 355

Certain Fish From Canada; Revocation of Countervailing Duty Orders

AGENCY: International Trade Administration, Commerce.

ACTION: Revocation of Countervailing Duty Orders.

SUMMARY: This notice is to advise the public that, as a result of a negative injury determination by the International Trade Commission, the Department of Commerce is revoking the countervailing duty orders on certain fish from Canada. The table in Part 355, Annex III of the Commerce Regulations is amended to reflect these revocations.

EFFECTIVE DATE: January 1, 1980.

FOR FURTHER INFORMATION CONTACT: Lorenza Olivas, Office of Compliance, International Trade Administration, U.S. Department of Commerce, Room 1126, Washington, D.C. 20230 (202–377–5222).

SUPPLEMENTARY INFORMATION: Three separate notices of "Final Countervailing Duty Determination" were published in the Federal Register: T.D. 77–107, April 13, 1977 (42 FR 19326), T.D. 78–181, June 16, 1978 (43 FR 25996) and T.D. 79–07, January 5, 1979 (44 FR 1372). The notices stated that the Treasury Department had determined that exports of certain fish from Canada were provided bounties or grants, within the meaning of section 303 of the Tariff Act of 1930 (19 U.S.C. 1303) ("the Act"). Concurrently with those determinations, the following notices were published waiving the imposition of countervailing duties under the authority of section 303(d) of the Act: T.D. 77–108 (42 FR 19237), T.D. 78–182 (32 FR 25995) and T.D. 79–08 (44 FR 1728).

On January 1, 1980, Title I of the Trade Agreements Act of 1979 (19 U.S.C. 1671 et seq.) ("the TAA") went into effect. On January 2, 1980, the authority for administering the countervailing duty laws was transferred from the Department of the Treasury to the Department of Commerce ("the Department"). Since Canada was a "country under the Agreement" (as defined in section 701(b) of the Act) as of January 1, 1980, the Department referred these cases to the International Trade Commission ("the ITC") for a material injury determination in accordance with section 104(a)(1)(A) of the TAA. Section 105 of the TAA continued the waiver pending the ITC determination. Liquidation continued throughout the period. The ITC published a negative material injury decision in the Federal Register of May 22, 1980 (45 FR 34456).

As a result, the Department hereby revokes Treasury Decisions 77–107, 77–108, 78–181, 78–182, 79–07 and 79–08 with respect to all entries of certain fish from Canada. The Department will instruct customs officers to continue liquidation of all such entries without regard to countervailing duties.

PART 355—COUNTERVAILING DUTIES

The table in Part 355, Annex III, Commerce Regulations (19 CFR Part 355, Annex III, 45 FR 4949), is amended under the country heading "Canada" by deleting from the column headed "Commodity", the words "Groundfish" (in two places) and "Fish"; from the column headed "Treasury Decision", the numbers "77–107", "78–181" and "79–07"; and from the column headed "Action", the words "Bounty declared-rate" (in three places).

(Sec. 104(a)(3)(B) of the TAA (93 Stat. 191, 19 U.S.C. 1671 note))

John D. Greenwald,

Deputy Assistant Secretary for Import Administration.

November 24, 1980.

[FR Doc. 80-37121 Filed 11-26-80; 8:45 am]

BILLING CODE 3510-25-M

DEPARTMENT OF HEALTH AND HUMAN SERVICES

Food and Drug Administration

21 CFR Part 14

Advisory Committees; Establishment

AGENCY: Food and Drug Administration.

ACTION: Final rule.

SUMMARY: Under the Federal Advisory Committee Act of October 6, 1972, and the public advisory committee procedures (21 CFR Part 14), the Food and Drug Administration (FDA) announces the establishment of the Anti-Infective Drugs Advisory Committee, the Dermatologic Drugs Advisory Committee, and the Ophthalmic Drugs Advisory Committee. This document adds to the agency's list of standing advisory committees. In notices published elsewhere in this issue of the Federal Register, FDA asks for

nominations for membership on these committees. This document also deletes the Anti-Infective and Topical Drugs Advisory Committee from the list of standing committees because its charter expired on April 10, 1980.

DATES: Effective November 28,1980; authority for the committees being established will end on October 7, 1982, unless the Secretary formally determines that renewal is in the public interest.

FOR FURTHER INFORMATION CONTACT: Richard L. Schmidt, Committee Management Office (HFA-306), Food and Drug Administration, 5600 Fishers Lane, Rockville, MD 20857, 301-443-2765.

SUPPLEMENTARY INFORMATION: Under the Federal Advisory Committee Act of October 6, 1972 (Pub. L. 92-463) and § 14.40(b) (21 CFR 14.40(b)), FDA announces the establishment of the Anti-Infective Drugs Advisory Committee, the Dermatologic Drugs Advisory Committee, and the Ophthalmic Drugs Advisory Committee.

The Anti-Infective Drugs Advisory Committee reviews and evaluates available data concerning the safety and effectiveness of marketed and investigational prescription drug products for use in the treatment of infectious diseases and makes appropriate recommendations to the Commissioner of Food and Drugs. The Committee will have 11 members.

The Dermatologic Drugs Advisory Committee reviews and evaluates available data concerning the safety and effectiveness of marketed and investigational prescription drug products for use in the treatment of dermatologic diseases and makes appropriate recommendations to the Commissioner of Food and Drugs. The Committee will have 11 members.

The Ophthalmic Drugs Advisory Committee reviews and evaluates available data concerning the safety and effectiveness of marketed and investigational prescription drug products for use in the treatment of ocular diseases and makes appropriate recommendations to the Commissioner of Food and Drugs. The Committee will have 11 members.

Therefore, under the Federal Food, Drug, and Cosmetic Act (sec. 701(a), 52 Stat. 1055 (21 U.S.C. 371(a))) and under authority delegated to the Commissioner of Food and Drugs (21 CFR 5.1), Part 14 is amended in § 14.100 by revising paragraph (c), to read as follows:

§ 14.100 List of standing advisory committees.

* * * * *

(c) *Bureau of Drugs*—(1) *Anesthetic and Life Support Drugs Advisory Committee.* (i) Date established: May 1, 1978.

(ii) Function: Reviews and evaluates available data on the safety and effectiveness of marketed and investigational prescription drugs for use in the field of anesthesiology and surgery.

(2) *Anti-Infective Drugs Advisory Committee.* (i) Date established: October 7, 1980.

(ii) Function: Reviews and evaluates available data on the safety and effectiveness of marketed and investigational prescription drugs for use in infectious diseases.

(3) *Arthritis Advisory Committee.* (i) Date established: April 5, 1974.

(ii) Function: Reviews and evaluates available data on the safety and effectiveness of marketed and investigational prescription drugs for use in arthritic conditions.

(4) *Cardiovascular and Renal Drugs Advisory Committee.* (i) Date established: August 27, 1970.

(ii) Function: Reviews and evaluates available data on the safety and effectiveness of marketed and investigational prescription drugs for use in cardiovascular and renal disorders.

(5) *Dermatologic Drugs Advisory Committee.* (i) Date established: October 7, 1980.

(ii) Function: Reviews and evaluates available data on the safety and effectiveness of marketed and investigational prescription drugs for use in the treatment of dermatologic diseases.

(6) *Drug Abuse Advisory Committee.* (i) Date established: May 31, 1978.

(ii) Function: Advises on the scientific and medical evaluation of information gathered by the Department of Health and Human Services and the Department of Justice on the safety, efficacy, and abuse potential of drugs and recommends actions to be taken on the marketing, investigation, and control of such drugs.

(7) *Endocrinologic and Metabolic Drugs Advisory Committee.* (i) Date established: August 27, 1970.

(ii) Function: Reviews and evaluates available data on the safety and effectiveness of marketed and investigational prescription drugs for use in endocrine and metabolic disorders.

(8) *Fertility and Maternal Health Drugs Advisory Committee.* (i) Date established: March 23, 1978.

(ii) Function: Reviews and evaluates available data on the safety and effectiveness of marketed and investigational prescription drugs for use in the practice of obstetrics and gynecology.

(9) *Gastrointestinal Drugs Advisory Committee.* (i) Date established: March 3, 1978.

(ii) Function: Reviews and evaluates available data on the safety and effectiveness of marketed and investigational prescription drugs for use in gastrointestinal diseases.

(10) *Oncologic Drugs Advisory Committee.* (i) Date established: September 21, 1978.

(ii) Function: Reviews and evaluates available data on the safety and effectiveness of marketed and investigational prescription drugs for use in the treatment of cancer.

(11) *Ophthalmic Drugs Advisory Committee.* (i) Date established: October 7, 1980.

(ii) Function: Reviews and evaluates available data on the safety and effectiveness of marketed and investigational prescription drugs for use in the treatment of ocular diseases.

(12) *Peripheral and Central Nervous System Drugs Advisory Committee.* (i) Date established: June 4, 1974.

(ii) Function: Reviews and evaluates available data on the safety and effectiveness of marketed and investigational prescription drugs for use in neurologic disease.

(13) *Psychopharmacologic Drugs Advisory Committee.* (i) Date established: June 4, 1974.

(ii) Function: Reviews and evaluates available data on the safety and effectiveness of marketed and investigational prescription drugs for use in the practice of psychiatry and related fields.

(14) *Pulmonary-Allergy Drugs Advisory Committee.* (i) Date established: February 17, 1972.

(ii) Function: Reviews and evaluates available data on the safety and effectiveness of marketed and investigational prescription drugs for use in the treatment of pulmonary disease and diseases with allergic and/or immunologic mechanisms.

(15) *Radiopharmaceutical Drugs Advisory Committee.* (i) Date established: August 30, 1967.

(ii) Function: Reviews and evaluates available data on the safety and effectiveness of marketed and investigational prescription drugs for use in the practice of nuclear medicine.

(16) *Advisory review panels for over-the-counter (OTC) drugs.* (i) Dates established—(*a*) *Antimicrobial Panel.* Established March 16, 1972;

(*b*) [Reserved]

(c) *Miscellaneous Internal Drug Products Panel.* Established July 16, 1973; and

(d) *Miscellaneous External Drug Products Panel.* Established July 16, 1973.

(ii) Function: Reviews and evaluates available data on the safety and effectiveness of nonprescription drug products.

* * * * *

Effective date. Since this is a technical conforming amendment to Part 14, the Commissioner finds that there is good cause for the rule to be published without notice and comment and to be effective immediately upon publication in the Federal Register, November 28, 1980.

(Sec. 701(a), 52 Stat. 1055 (21 U.S.C. 371(a)))

Dated: November 20, 1980.

William F. Randolph,

Acting Associate Commissioner for Regulatory Affairs.

[FR Doc. 80-37035 Filed 11-26-80; 8:45 am]

BILLING CODE 4110-03-M

---

21 CFR Parts 510, 558

New Animal Drugs and New Animal Drugs for Use in Animal Feeds; Tylosin

AGENCY: Food and Drug Administration.

ACTION: Final rule.

SUMMARY: The Food and Drug Administration (FDA) is amending the regulations to reflect approval of a new animal drug application (NADA) filed for Micro Blenders, Inc., providing for safe and effective use of a 10 gram-per-pound tylosin premix for making complete swine feeds, and to add this firm to the list of approved NADA sponsors.

EFFECTIVE DATE: November 28, 1980.

FOR FURTHER INFORMATION CONTACT: Jack C. Taylor, Bureau of Veterinary Medicine (HFV-136), Food and Drug Administration, 5600 Fishers Lane, Rockville MD 20857, 301-443-5247.

SUPPLEMENTARY INFORMATION: Micro Blenders, Inc., is sponsor of NADA 123-065 submitted on its behalf by Elanco Products Co. The NADA provides for use of a premix containing 10 grams of tylosin (as tylosin phosphate) per pound for making complete swine feeds used to increase rate of weight gain and improve feed efficiency.

Approval of this NADA relies upon safety and effectiveness data contained in Elanco Product Co.'s approved NADA 12-491. Use of the data in NADA 12-491 to support this NADA has been authorized by Elanco. This approval does not change the approved use of the drug. Consequently, approval of this NADA poses no increased human risk from exposure to residues of the animal drug, nor does it change the conditions of the drug's safe use in the target animal species. Accordingly, under the Bureau of Veterinary Medicine supplemental approval policy (42 FR 64367; December 23, 1977) approval of this NADA has been treated as would approval of a category II supplement and did not require reevaluation of safety and effectiveness data in NADA 12-491.

Micro Blenders, Inc., has not previously been included in the regulations in the list of approved sponsors. The regulations are amended to reflect this approval and to include this firm in the list of sponsors.

The agency has determined pursuant to 21 CFR 25.24(d)(1) (proposed December 11, 1979; 44 FR 71742) that this action is of a type that does not individually or cumulatively have a significant impact on the human environment. Therefore, neither an environmental assessment nor an environmental impact statement is required.

In accordance with the freedom of information provisions of Part 20 (21 CFR Part 20) and § 514.11(e)(2)(ii) (21 CFR 514.11(e)(2)(ii)), a summary of the safety and effectiveness data and information submitted to support approval of this application may be seen in the Dockets Management Branch (formerly the Hearing Clerk's office) (HFA-305), Food and Drug Administration, Rm. 4-62, 5600 Fishers Lane, Rockville, MD 20857, from 9 a.m. to 4 p.m., Monday through Friday.

Therefore, under the Federal Food, Drug, and Cosmetic Act (sec. 512(i), 82 Stat. 347 (21 U.S.C. 360b(i))) and under authority delegated to the Commissioner of Food and Drugs (21 CFR 5.1) and redelegated to the Bureau of Veterinary Medicine (21 CFR 5.83), Parts 510 and 558 are amended as follows:

1. In Part 510, § 510.600 is amended by adding a new sponsor alphabetically to paragraph (c)(1) and numerically to paragraph (c)(2), to read as follows:

§ 510.600 Names, addresses, and drug labeler codes of sponsors of approved applications.

* * * * *

(c) * * *

(1) * * *

Firm name and address	Drug labeler code
* * * * *	
Micro Blenders, Inc., Highway 210 E. at 291, P.O. Box 357, Liberty, MO 64068	050782
* * * * *	

(2) * * *

Drug labeler code	Firm name and address
* * * * *	
050782	Micro Blenders, Inc., Highway 210 E. at 291, P.O. Box 357, Liberty, MO 64068.
* * * * *	

2. In Part 558, § 558.625 is amended by adding new paragraph (b)(74), to read as follows:

§ 558.625 Tylosin.

* * * * *

(b) * * *

(74) To 050782: 10 grams per pound: paragraph (f)(1)(vi)(a) of this section.

* * * * *

Effective date. This regulation is effective November 28, 1980.

(Sec. 512(i), 82 Stat. 347, (21 U.S.C. 360b(i)))

Dated: November 19, 1980.

Gerald B. Guest,

Acting Director, Bureau of Veterinary Medicine.

[FR Doc. 80-36871 Filed 11-26-80; 8:45 am]

BILLING CODE 4110-03-M

---

21 CFR Parts 510, 558

New Animal Drugs and New Animal Drugs for Use in Animal Feeds; Tylosin

AGENCY: Food and Drug Administration.

ACTION: Final rule.

SUMMARY: The Food and Drug Administration (FDA) is amending the regulations to reflect approval of a new animal drug application (NADA) filed for Webel Feeds, Inc., providing for use of 0.8-, 1-, 2-, and 10-gram-per-pound tylosin premixes for making complete cattle and swine feeds, and to add this firm to the list of approved NADA sponsors.

EFFECTIVE DATE: November 29, 1980.

FOR FURTHER INFORMATION CONTACT: Jack C. Taylor, Bureau of Veterinary Medicine (HFV-136), Food and Drug Administration, 5600 Fishers Lane, Rockville, MD 20857, 301-443-5247.

SUPPLEMENTARY INFORMATION: Webel Feeds, Inc., R.R. 3, Pittsfield, IL 62363, is the sponsor of an NADA (116-196)

submitted on its behalf by Elanco Products Co. The NADA provides for safe and effective use of premixes containing 0.8, 1, 2, and 10 grams of tylosin (as tylosin phosphate) per pound for manufacturing complete cattle and swine feeds. The cattle feeds are indicated for reduction of the incidence of liver abscesses. The swine feeds are indicated for increased rate of weight gain, prevention of swine dysentery, and maintenance of weight gains and feed efficiency in the presence of atrophic rhinitis.

Approval of this NADA relies upon safety and effectiveness data contained in Elanco Product Co.'s approved NADA 12-491. Use of the data in NADA 12-491 to support this NADA has been authorized by Elanco. This approval does not change the approved use of the drug. Consequently, approval of this NADA poses no increased human risk from exposure to residues of the animal drug, nor does it change the conditions of the drug's safe use in the target animal species. Accordingly, under the Bureau of Veterinary Medicine's supplemental approval policy (42 FR 64367; December 23, 1977) approval of this NADA has been treated as would an approval of a Category II supplement and did not require reevaluation of safety and effectiveness data in NADA 12-491.

The agency has determined pursuant to 21 CFR 25.24(d)(1)(iii) (proposed December 11, 1979; 44 FR 71742) that this action is of a type that does not individually or cumulatively have a significant impact on the human environment. Therefore, neither an environmental assessment nor an environmental impact statement is required.

Webel Feeds, Inc., has not previously been included in the regulations under the list of approved sponsors. The regulations are amended to reflect this approval and to include this firm in the list of sponsors.

In accordance with the freedom of information provisions of Part 20 (21 CFR Part 20) and § 514.11(e)(2)(ii) (21 CFR 514.11(e)(2)(ii)), a summary of safety and effectiveness data and information submitted to support approval of this application may be seen in the Dockets Management Branch (formerly the Hearing Clerk's office) (HFA-305), Food and Drug Administration, Rm. 4-62, 5600 Fishers Lane, Rockville, MD 20857, from 9 a.m. to 4 p.m., Monday through Friday.

Therefore, under the Federal Food, Drug, and Cosmetic Act (sec. 512(i), 82 Stat. 347 (21 U.S.C. 360b(i))) and under authority delegated to the Commissioner of Food and Drugs (21 CFR 5.1) and redelegated to the Bureau of Veterinary Medicine (21 CFR 5.83), Parts 510 and 558 are amended as follows:

1. In Part 510, § 510.600 is amended by adding a new sponsor alphabetically to paragraph (c)(1) and numerically to paragraph (c)(2), to read as follows:

§ 510.600 Names, addresses, and drug labeler codes of sponsors of approved applications.

* * * * *

(c) * * *

(1) * * *

Firm name and address	Drug Labeler Code
* * * * *	
Webel Feeds, Inc., R.R. 3, Pittsfield, IL 62363	035098
* * * * *	

(2) * * *

Drug Labeler Code	Firm name and address
* * * * *	
035098	Webel Feeds, Inc., R.R. 3, Pittsfield, IL 62363.
* * * * *	

2. In Part 558, § 558.625 is amended by adding new paragraph (b)(73), to read as follows:

§ 558.625 Tylosin.

* * * * *

(b) * * *

(73) To 03598: 0.8, 1, 2, and 10 grams per pound; paragraph (f)(1)(i), (f)(1)(vi) (*a*), (*b*), and (*d*), of this section.

* * * * *

Effective date. This regulation is effective November 28, 1980.

(Sec. 512(i), 82 Stat. 347 (21 U.S.C. 360b(i)))

Dated: November 19, 1980.

Gerald B. Guest,

Acting Director, Bureau of Veterinary Medicine.

[FR Doc. 80-36872 Filed 11-26-80; 8:45 am]

BILLING CODE 4110-03-M

21 CFR Part 1030

[Docket No. 80N-0099]

Radiological Health; Performance Standards for Microwave and Radio Frequency Emitting Products; Amendments to the Microwave Oven Standard; Measurement and Test Conditions

AGENCY: Food and Drug Administration.

ACTION: Final rule.

SUMMARY: The Food and Drug Administration (FDA) is amending the performance standard for microwave ovens to delete the error limit and effective aperture requirements for instruments used for compliance measurement of leakage radiation from microwave ovens. The characteristics of these instruments and the conditions under which they are used would now be accounted for in information submitted to the Bureau of Radiological Health (BRH) by the microwave oven manufacturers as part of their testing programs for microwave ovens. FDA also adds a new definition of "equivalent plane-wave power density." These changes are designed to reflect the actual compliance testing situation for microwave ovens. No change in permissible leakage levels is to be made.

EFFECTIVE DATE: November 30, 1981.

FOR FURTHER INFORMATION CONTACT: Joseph Wang, Bureau of Radiological Health (HFX-460), Food and Drug Administration, 5600 Fishers Lane, Rockville, MD 20857, 301-443-3426.

SUPPLEMENTARY INFORMATION: In the Federal Register of May 2, 1980 (45 FR 29307), FDA proposed to delete from 21 CFR Part 1030 the error limit and effective aperture requirements for instruments used for compliance measurement of leakage radiation from microwave ovens. FDA also proposed to add § 1030.10(b)(8) to define "equivalent plane-wave power density." In response to the May 2, 1980, proposed rule, the agency has received comments from a microwave instrument manufacturer and an organization that represents some of the microwave oven manufacturers. These enumerated comments and the agency's response to these comments follow:

1. One comment stated that the writer did not learn about the Technical Electronic Product Radiation Safety Standards Committee (TEPRSSC) meeting until it was over and suggested that TEPRSSC did not give a fair and comprehensive hearing on the proposed rule. This comment argued that members of TEPRSSC were given only the agency side of the proposed changes without any opportunity for industry to voice its concern to TEPRSSC. Also this comment believes that the review of the issues at the June 1978 TEPRSSC meeting was incomplete because the "Interim Guidance on Microwave Instrumentation" (interim guidance document), a BRH draft document that evaluates existing instrumentation, was not available at the TEPRSSC meeting. For these reasons, the comment urged that the proposed rule should be reconsidered by TEPRSSC.

The agency notes that the initial draft of this proposal was sent to members of

TEPRSSC for review prior to its 16th meeting on June 1 and 2, 1978. This Committee, a permanent statutory advisory committee to the Secretary, Department of Health and Human Services, must be consulted prior to the establishment or amendment of performance standards for electronic products. In addition to announcement to the public of the topics to be considered at this meeting via the Federal Register of May 16, 1978 (43 FR 21053), copies of the draft proposal were sent to all microwave oven manufacturers prior to the TEPRSSC meeting with an invitation to attend the meeting. As a result of these invitations, representatives for both microwave oven manufacturers and microwave instrument manufacturers were present at this meeting and were invited by the chairman of TEPRSSC at the end of the BRH presentation to inform the Committee of any concerns about the proposed rule. After hearing a presentation on the change, the Committee concurred with FDA's proposal. No objections from the public were raised at this meeting. Prior to the BRH presentation to TEPRSSC, BRH staff had met separately with representatives of one microwave oven manufacturer, at the manufacturer's request, to discuss the main issues of the proposed rule.

The interim guidance document has not yet been issued in final form. It is intended to provide guidance to manufacturers in accounting for instrument uncertainty when setting microwave oven leakage rejection limits. The document includes an evaluation of the measurement uncertainty of existing instrumentation; the uncertainty is based on a more technically oriented BRH document.

The technical basis for the proposed rule and the rationale for this change had been known by BRH and a number of manufacturers for some time prior to the June 1978 TEPRSSC meeting. This information was presented to and adequately discussed with TEPRSSC. In addition, BRH staff met with representatives of microwave oven and microwave instrument manufacturers at the request of the Association of Home Appliance Manufacturers on November 17, 1979, to discuss the draft proposed rule. For these reasons, the agency has determined that a reconsideration by TEPRSSC of the propsed rule is unnecessary and unwarranted. The comment is rejected.

2. A comment stated that the historical evidence that microwave ovens have not resulted in radiation injury to consumers is convincing proof that the present standard is adequate using the existing measuring technique regardless of its imprecisions. Therefore, the comment believes that safety is not an issue with the FDA proposal.

The agency agrees that safety is not an issue in the proposed rule. However, if FDA were to enforce strictly the current requirements for microwave measurement instruments, many microwave oven manufacturers would be unable to certify their ovens based on tests made with present instruments, which cannot meet the ±1 decibel accuracy requirement. These manufacturers would then have to bear the expense of obtaining new instruments. The final rule will eliminate this dilemma.

3. One comment contended that FDA's proposal to delete the error limit and effective aperture requirements represents a tightening of the standard because it effectively lowers the microwave emission level which must be used for factory rejection of the products.

The proposed revision was intended to bring the language of the standard in line with FDA's regulatory policy. Most manufacturers have been using microwave oven leakage rejection levels that are lower than would be necessary simply to take measurement uncertainty into account. It has been agency policy to require that manufacturers withhold from marketing those microwave ovens whose measured leakage is not demonstrably below the limit of the standard. Because most manufacturers already have a margin of safety in their rejection level, it will not be necessary for them to lower their acceptable emission levels further.

4. Another comment noted that the proposal seeks to account for only some uncertainty, and is based on a BRH interim guidance document which provides the method for establishing the degree of error. The comment argued that no one can be certain that these errors represent all the errors that will ever be identified. This comment also claimed that instrument manufacturers and BRH are not in agreement that the methods prescribed in the interim guidance document are correct and accurate.

As stated in response to the comment in paragraph 3 above, the agency intends to bring the language of the microwave oven standard into line with all other performance standards issued under the authority of the Radiation Control for Health and Safety Act of 1968. Thus, the standard specifies the allowable radiation emission limit, which permits any manufacturer to decide on the instrument for the measurement of radiation but requires the manufacturer to identify and take into account errors and statistical uncertainties in the measurement when setting rejection limits. The interim guidance document, which will be published in final form before November 30, 1981 is intended to help manufacturers to comply with the final rule. BRH has identified the errors and statistical uncertainties for currently used instruments in the interim guidance document. These data can be used by manufacturers to set rejection limits without further analysis. FDA agrees that it is always possible that an "unknown" source of error may be found and will need to be incorporated into the setting of rejection limits; however, BRH's error and statistical uncertainty analyses have been very thorough. FDA believes that there is little likelihood of finding other "significant" sources of error or uncertainty. Any technical disagreements between BRH and manufacturers can be resolved through technical meetings on the basis of scientific merit and would not affect the amended regulation.

5. One comment stated that removing minimum requirements for test equipment accuracy from the standard will permit unequal treatment of manufacturers. The comment argued that some manufacturers' testing programs may obtain a less thorough review than others because the skills of the Bureau staff who review and approve testing programs vary, and because of periodic personnel changes. The comment also argued that the resources and technical skills available to different oven manufacturers vary. Thus, the proposal will impose a heavier burden on some manufacturers than others. For example, the agency, through review of the error analysis of one manufacturer which may have included additional errors, may impose these error requirements on other manufacturers that may not have this type of technical capability.

The agency notes that it has always been BRH's policy to issue guidance documents to assist manufacturers in complying with regulatory requirements. Besides providing a uniform regulatory review process, this policy takes into consideration the varying technical skills and resources within the industry. It is clear from the interim guidance document that instruments are currently available that could be used with rejection limits as high as the highest currently in use by industry (0.8 milliwatt per square centimeter) with no analysis other than that available in the

interim guidance document. Use of these instruments will require no investment of time or resources for instrument analysis by the manufacturer beyond what is already in place to ensure adequate constancy of instrument calibration. While the agency may at some future time require additional instrument errors to be considered, prior to imposing any additional requirements, FDA would ensure that manufacturers are given adequate opportunity to comment, and that the technical basis for such requirements is sound. The comment is rejected.

6. Another comment claimed that the options of seeking to establish worst-case testing conditions, considering all the variations of use and the potential accuracy of measurement, were all studied and discarded in 1969–1971 as being much too complicated. The comment also claimed that applying all the negative errors and inaccuracies so that they are directly cumulative, as illustrated in the interim guidance document, is erroneous. Typical engineering practice would establish the root-mean-square (RMS) value of the errors or use probabilities to determine the likelihood of the errors being cumulative.

FDA notes that when the standard was written the instrument manufacturers had not yet developed comprehensive laboratory protocols and techniques for assessing instrument errors. The agency believes that evaluating measurement uncertainties is a common and general scientific practice and should be performed for microwave oven survey instruments. A total of only RMS errors is meaningful when the probability distribution of all errors is the same in all use situations and when such errors are shown to be independent. However, the actual error in a given measurement can be considerably worse than such a sum. Further, the probability distribution of many of the errors that affect microwave oven survey instruments will vary from one instrument manufacturer to another. Often, microwave oven manufacturers do not know the probability distributions of the errors and are not able to establish the independence of these errors. To assure that ovens actually meet the requirements of the standard, the agency has evaluated the full range of errors that may be encountered in an actual use situation and has made this information available to manufacturers. The comment requires no change in the final rule.

7. One comment stated that the proposed rule will apply to microwave ovens marketed prior to the effective date of the amendment. Therefore, service organizations will need to purchase new instruments to comply with the new requirement for error analysis and will pass this extra expense to the consumer.

FDA has never required service organizations to comply with the microwave oven standard. The standard is directed only at manufacturers, assemblers, and importers. Thus, service organizations need not submit their testing programs to the agency or purchase new instruments in response to the amendment.

8. Another comment noted that the FDA proposal will add higher costs to the microwave oven industry.

The agency notes that the anticipated economic effects of the proposal were reviewed through a regulatory analysis assessment document at the time the proposal was issued. This document is available for public review in the Dockets Management Branch, Food and Drug Administration. The agency was not aware of any data indicating that the proposed rule would increase costs to the microwave oven industry, and no data were submitted with the comment. The comment does not justify any change in the final rule.

9. One comment stated that the FDA proposal for an electric (E)-field measurement has not received adequate technical consideration and that it is premature to make this change.

The agency notes that all of the oven survey instruments in use by the microwave oven manufacturers perform measurements of the equivalent plane-wave power density as specified in the rule. The operation of such E-field devices has been examined in published scientific papers by both the instrument manufacturers and by FDA. The revision is intended to bring the standard into line with current practice. Therefore, the comment is rejected.

10. One comment states that the proposal implies that the maximum E-field vector must be estimated for a point. The comment argued that, because a finite size aperture is needed for the measurement, and because there is no simple way to extrapolate this measurement to a point, to make this change is premature.

FDA agrees that any measurement device must have some finite dimensions. However, in considering free-space field variations, an arbitrarily good approximation of the "point" E-field can be obtained using a very small probe. Probes having dimensions much smaller than one wavelength have been developed and described in the published scientific literature. Errors arising from spatial averaging can be evaluated by comparison of instruments to such probes. The comment does not require any change in the final rule.

11. Another comment objected to the proposal because the change would permit use of instruments with extreme inaccuracies giving meaningless measurements because the fields would not be quantified. The comment argued that the proposal would also allow any manufacturer to claim that its instruments meet the requirements of the microwave oven standard.

FDA notes that manufacturers indeed are permitted to use any test instrument provided they can account for all the errors in the measurement. The agency will issue guidance which will help manufacturers to identify accountable errors. If an extremely inaccurate instrument is used, the total error for the measurement would be so large that a very low rejection level would need to be set. Therefore, it still would be advantageous for manufacturers to use more accurate instruments. Because instrument accuracy requirements are no longer in the standard, manufacturers can no longer claim that an instrument meets the standard.

12. Two comments state that, with regard to assessing instrument uncertainties, FDA is obligated to identify in the standard what must be measured, how it is to be measured, and with what accuracy the measurement must be made.

FDA disagrees that the standard must identify accuracy of the test equipment. Other standards published by the agency under the Radiation Control for Health and Safety Act of 1968 permit use of any instrument provided the user can account for all the errors in the measurement. FDA has identified in the standards what must be measured and, where possible, how it is to be measured. The agency believes it has an obligation to consider all scientifically valid instrument designs. Because test methods must necessarily be suited to the design of the instrument, it is not possible to specify appropriate tests for instruments not yet designed. Therefore, the standard should not require testing and measuring procedures that may hinder future instrument designs. However, FDA has developed and made available to manufacturers in other publications simple test protocols for those instruments currently in use for compliance measurements. The comments are rejected.

13. One comment suggested that the proposed rule would result in nonuniform rejection test limits within the industry.

This is beside the point. FDA is primarily concerned with the uniformity of test results, i.e., that ovens not be found in compliance with the standard when tested by one instrument but out of compliance when tested by another. To achieve uniform determination of compliance, the agency concludes that it is necessary to account for the uncertainties associated with particular testing instruments. Rejection limits now used within the industry are not uniform because of known instrument undertainties and the uniqueness of each manufacturer's product designs and testing programs. What is important then, is not uniformity of rejection limits but uniformity of test results.

Therefore, under the Public Health Service Act as amended by the Radiation Control for Health and Safety Act of 1968 (sec. 358, 82 Stat. 1177–1179 as amended (42 U.S.C 263f)) and under authority delegated to the Commissioner of Food and Drugs (21 CFR 5.1), Part 1030 is amended in § 1030.10 by adding new paragraph (b)(8) and by revising paragraphs (c)(1) and (3) (i) and (ii), to read as follows:

§ 1030.10 Microwave ovens.

* * * *

(b) * * *

(8) "Equivalent plane-wave power density" means the square of the root-mean-square (RMS) electric field strength divided by the impedance of free space (377 ohms).

(c) *Requirements*—(1) *Power density limit.* The equivalent plane-wave power density existing in the proximity of the external over surface shall not exceed 1, milliwatt per square centimeter at any point 5 centimeters or more from the external surface of the oven measured prior to acquisition by a purchaser, and, thereafter, 5 milliwatts per square centimeter.

* * * * *

(3) *Measurement and test conditions.* (i) Compliance with the power density limit in paragraph (c)(1) of this section shall be determined by measurement of the equivalent plane-wave power density made with an instrument which reaches 90 percent of its steady-state reading within 3 seconds when the system is subjected to a step-function input signal. Tests for compliance shall account for all measurement errors and uncertainties to ensure that the equivalent plane-wave power density does not exceed the limit prescribed by paragraph (c)(1) of this section.

(ii) Microwave ovens shall be in compliance with the power density limit if the maximum reading obtained at the location of greatest microwave radiation emission, taking into account all measurement errors and uncertainties, does not exceed the limit specified in paragraph (c)(1) of this section when the emission is measured through at least one stirrer cycle. As provided in § 1010.13 of this chapter, manufacturers may request alternative test procedures if, as a result of the stirrer characteristics of a microwave oven, such oven is not susceptible to testing by the procedures described in this paragraph.

* * * * *

Effective date This regulation is effective November 28, 1981.

(Sec. 358, 82 Stat. 1177–1179 as amended (42 U.S.C. 263f))

Dated: November 17, 1980

William F. Randolph,

Acting Associate Commissioner for Regulatory Affairs

[FR Doc. 80-36873 Filed 11-24-80; 8:45 am]

BILLING CODE 4110-03-M

DEPARTMENT OF THE INTERIOR

Bureau of Indian Affairs

25 CFR Part 258

Indian Fishing—Hoopa Valley Indian Reservation; Conservation Regulations

Correction

In FR Doc. 80–34975 appearing at page 74688 in the issue for Monday, November 10, 1980, make the following correction:

On page 74688, in the first column, in the "Effective Date" paragraph, "on or before December 10, 1980" should have read "on December 10, 1980."

BILLING CODE 1505-01-M

DEPARTMENT OF TRANSPORTATION

Coast Guard

33 CFR Part 110

[CGD 7-80-03]

Establishment of Special Anchorage Area, Apollo Beach, Fla.

AGENCY: Coast Guard, DOT.

ACTION: Final Rule.

SUMMARY: This rule establishes a Special Anchorage Area at Apollo Beach, Florida. With the establishment of this Special Anchorage Area, owners of vessels not more than 65 feet in length would be relieved of the requirement to carry and display anchor lights while at anchor. This area would provide space well removed from channels and fairways to accommodate anchoring of local and transit pleasure craft.

EFFECTIVE DATE: This amendment is effective on 29 December 1980.

FOR FURTHER INFORMATION CONTACT: Lieutenant Commander Richard W. Harbert, Commander, Seventh Coast Guard District (m), 51 S.W. First Avenue, Miami, Fl 33130, (305) 350–5276.

SUPPLEMENTARY INFORMATION: On July 21, 1980, the Coast Guard published a proposed rule (45 FR 48662) concerning this amendment. Interested persons were given until September 4, 1980 to submit comments. No comments were received. The Coast Guard has determined that in accordance with the Department of Transportation's "Regulatory Policies and Procedures" (44 FR 11034), this amendment is nonsignificant. An Environmental Assessment was completed in May 1980 which resulted in a finding of no significant impact on the quality of the human environment.

DRAFTING INFORMATION: The principal persons involved in drafting this rule are Lieutenant Commander Richard W. Harbert, Project Manager, Marine Safety Division, Seventh Coast Guard District, and Lieutenant D. L. Brannon, Project Attorney, Legal Officer, Seventh Coast Guard District.

In consideration of the foregoing Part 110, Title 33, Code of Federal Regulations is amended by adding 110.74b to read as follows:

§ 110.74b Apollo Beach, Florida.

Beginning at a point approximately 300 feet south of the Tampa Sailing Squadron at latitude 27° 46' 50.2" N., longitude 82° 25' 27.8" W.; thence southeasterly to latitude 27° 46' 45.6" N., longitude 82° 25' 23.2" W.; thence southwesterly to latitude 27° 46' 35.8" N., longitude 82° 25' 34.8" W., thence northwesterly to latitude 27° 46' 39.9" N., longitude 82° 25' 39.6" W., thence to the point of beginning.

Sec. (1, 30 Stat. 98 as amended (33 U.S.C. 180); sec. 6(g)(1)(B), 80 Stat. 937; (49 U.S.C. 1655(g)(1)(B); 49 CFR 1.46(c)(2))

Dated: November 24, 1980.

B. L. Stabile,

Rear Admiral, U.S. Coast Guard, Commander, Seventh Coast Guard District.

[FR Doc. 80-37119 Filed 11-26-80; 8:45 am]

BILLING CODE 4910-14-M

DEPARTMENT OF EDUCATION

34 CFR Part 662

Higher Education Programs in Modern Foreign Language Training and Area Studies

AGENCY: Department of Education.

ACTION: Final Regulations.

SUMMARY: The Secretary of Education amends the regulations for the Doctoral Dissertation Research Abroad, Faculty Research Abroad, Group Projects Abroad, and Foreign Curriculum Consultants programs. The amendments are intended to clarify and assign weights to the selection criteria.

EFFECTIVE DATE: These final regulations are expected to take effect 45 days after they are transmitted to Congress. Regulations are usually transmitted to Congress several days before they are published in the Federal Register. The effective date is changed by statute if Congress takes certain adjournments. If you want to know the effective date of these regulations, call or write the Department of Education contact person.

FOR FURTHER INFORMATION CONTACT: Richard T. Thompson, Chief, International Studies Branch, Division of International Research and Studies, Office of International Education, 400 Maryland Avenue, SW, (Room 3923, ROB 3), Washington, D.C. 20202. Telephone (202) 245-2356.

SUPPLEMENTARY INFORMATION: In the Notice of Proposed Rulemaking published in the Federal Register of April 3, 1980 (45 FR 22806), the Commissioner of Education invited comments on the proposed regulations to amend the selection criteria for the Higher Education Programs in Modern Foreign Language Training and Area Studies (45 CFR Part 148, now 34 CFR Part 662).

No comment has been received from the public but program officials have concluded that certain criteria from the Education Department General Administrative Regulations (EDGAR) are not appropriate for use as selection criteria for two of the programs involving individual fellowships. Accordingly, appropriate changes have been made in §§ 148.14 and 148.24 (new §§ 662.14 and 622.24), which contain the selection criteria for the Doctoral Dissertation Research Abroad and Faculty Research Abroad Fellowships programs, to (a) clarify the criteria, and (b) delete inappropriate criteria. These changes include explanations of each criterion and its relation to the program to which it applies.

In addition, the criteria for all four programs have been weighted to provide for appropriate emphasis of certain factors of primary importance in the legislative mandate of Section 102(b)(6) of the Mutual Educational and Cultural Exchange Act of 1961, the authorizing legislation. Additional weight has been assigned to such items as the plan of action, the qualifications of the individual applicants, and the adequacy of the budgets requested.

Section 148.34(i) has been revised to facilitate selection of categories of projects dealing with foreign languages and areas that are critical to the national interest at the new § 662.34(i). These categories will be designated annually by the Secretary in the Notice of Closing Date.

As required by Section 431(a) of the General Education Provisions Act, as amended (20 U.S.C. 1232(a)), a citation of statutory authority for each substantive provision has been placed in parentheses immediately following the text of the provision. If all the provisions of a section are supported by the same citation, the citation is given at the end of the section.

(Catalog of Federal Domestic Assistance No. 84.019; Faculty Research Abroad program. No. 84.020; Foreign Curriculum Consultants program. No. 84.021; Group Projects Abroad program. No. 84.022; Doctoral Dissertation Research Abroad program)

Dated: November 21, 1980.

Shirley M. Hufstedler,

Secretary of Education.

Part 662 of Title 34 of the Code of Federal Regulations is amended as follows:

1. Section 662.14 is amended to read as follows:

§ 662.14 Selection criteria.

The Secretary uses the criteria in this section to evaluate the applications of graduate students for the purpose of recommending to the Board of Foreign Scholarships candidates for fellowships under this subpart. Preference will be given to American citizens who have served in the Armed Forces of the United States. The criteria are weighted and total 60 points.

(a) *Plan of action* (Maximum 20 points).

(1) The Secretary reviews each application for information that shows the quality of the plan of action for the project.

(2) The Secretary looks for information that shows—

(i) The project is original, the problems, questions, and hypotheses are well formulated and the formulation reflects adequate knowledge of related research;

(ii) Guidance and supervision on the part of the dissertation advisor or committee throughout all stages, including the development of the project, understanding of research conditions abroad, and actual research in the field;

(iii) The project's location in a foreign country is necessary for the successful completion of the project and that the proposal demonstrates knowledge and utilization of resources pertinent to the project which are available in the United States;

(iv) The methodology is specifically described, sound, and appropriate to the project.

(b) *Qualifications of the applicant* (Maximum 15 points).

(1) The Secretary reviews each application for information that shows the qualifications of the applicant.

(2) The Secretary looks for information that shows—

(i) The applicant's academic record is excellent and relevant to the proposed project;

(ii) The applicant possesses adequate foreign language skills to effectively carry out the proposed project;

(iii) The applicant's ability to conduct research in a foreign cultural context, as evidenced by the applicant's references or previous overseas experience.

(c) *Budget and cost effectiveness* (Maximum 10 points).

(1) The Secretary reviews each application for information that shows the project has an adequate budget and is cost effective.

(2) The Secretary looks for information that shows—

(i) The budget is adequate to support the project activities and the project can be completed within the proposed time limits;

(ii) The allowances are reasonable in relation to the objectives of the project.

(d) *Benefits to the host country* (Maximum 5 points).

(1) The Secretary reviews each application for information that shows benefits accruing to the host country as a result of the research.

(2) The Secretary looks for information that shows that the proposal reflects the intent to share periodically, during the fellowship period, the results of the research in progress with host country scholars and officials and reflects the intent to make a copy of the dissertation available for use by interested host country scholars and officials.

(e) *Adequacy of overseas resources* (Maximum 5 points).

(1) The Secretary reviews each application for information that shows that there are adequate overseas resources available for the project.

(2) The Secretary looks for information that shows that the overseas facilities indicated will afford sufficient and appropriate locations for the proposed research and that the applicant has made preparations to establish research contacts and affiliations abroad.

(f) *Priorities* (Maximum 5 points).

(1) The Secretary reviews each application for information that shows that the project serves program priorities in the field of modern foreign languages and area studies. The Secretary will announce program priorities in each year's Notice of Closing Date.

(2) The Secretary looks for information that shows that the applicant addresses the program priorities for that year.

(22 U.S.C. 2452(b)(6); 2456(a)(2))

2. Section 662.24 is amended to read as follows:

§ 662.24 Selection criteria.

The Secretary uses the criteria in this section to evaluate the applications of faculty for the purpose of recommending to the Board of Foreign Scholarships candidates for fellowships under this subpart. Preference will be given to American citizens who have served in the Armed Forces of the United States. The criteria are weighted and total 60 points.

(a) *Plan of action* (Maximum 20 points).

(1) The Secretary reviews each application for information that shows the quality of the plan of action for the project.

(2) The Secretary looks for information that shows—

(i) The problems, questions, and hypotheses are well formulated and the formulation of the project reflects adequate knowledge of related research;

(ii) The objectives of the project are capable of being obtained and relevant to the sponsoring institution's plans for developing and/or strengthening programs in modern foreign languages and area studies.

(iii) The project's location in a foreign country is necessary for the successful completion of the project and that the proposal demonstrates knowledge and utilization of resources pertinent to the project which are available in the United States;

(iv) The methodology is specifically described, sound, and appropriate to the project.

(b) *Qualifications of applicant* (Maximum 15 points).

(1) The Secretary reviews each application for information that shows the qualifications of the applicant.

(2) The Secretary looks for information that shows—

(i) The applicant's academic and professional record is excellent and relevent to the proposed project;

(ii) The applicant possesses adequate foreign language skills to effectively carry out the proposed project;

(iii) The applicant's ability to conduct research in a foreign cultural context, as evidenced by previous language and area studies training or previous overseas experience.

(c) *Budget and cost effectiveness* (Maximum 10 points).

(1) The Secretary reviews each application for information that shows that the project has an adequate budget and is cost effective.

(2) The Secretary looks for information that shows—

(i) The budget is adequate to support the project activities and the project can be completed within the proposed time limits.

(ii) The allowances are reasonable in relation to the objectives of the project.

(d) *Benefits* (Maximum 5 points).

(1) The Secretary reviews each application for information that shows benefits accruing from the proposed research.

(2) The Secretary looks for information that shows that the proposal reflects the intent to consult and share results of the research with host country scholars and officials and the American scholarly community.

(e) *Adequacy of overseas resources* (Maximum 5 points).

(1) The Secretary reviews each application for information that shows that there are adequate overseas resources available for the project.

(2) The Secretary looks for information that shows that the overseas facilities indicated will afford sufficient and appropriate locations for the proposed research and that the applicant has made preparations to establish research contacts and affiliations abroad.

(f) *Priorities* (Maximum 5 points).

(1) The Secretary reviews each application for information that shows that the project serves program priorities in the field of modern foreign languages and area studies. The Secretary will announce program priorities in each year's Notice of Closing Date.

(2) The Secretary looks for information that shows that the applicant addresses the program priorities for that year.

(22 U.S.C. 2452(b)(6); 2456(a)(2))

3. Section 662.34 is amended to read as follows:

§ 662.34 Selection criteria.

The Secretary uses the criteria in this section to evaluate applications for the purpose of recommending to the Board of Foreign Scholarships projects for funding under this subpart. The criteria are weighted and total 100 points.

(a) *Plan of operation* (Maximum 25 points).

(1) The Secretary reviews each application for information that shows the quality of the plan of operation for the project.

(2) The Secretary looks for information that shows—

(i) High quality in the design of the project;

(ii) An effective plan of management that insures proper and efficient administration of the project;

(iii) A clear description of how the objectives of the project relate to the purpose of the program;

(iv) The way the applicant plans to use its resources and personnel to achieve each objective;

(v) A clear description of how the applicant will provide equal access and treatment for eligible project participants who are members of groups that have been traditionally underrepresented, such as—

(A) Members of racial or ethnic minority groups;

(B) Women;

(C) Handicapped persons; and

(D) The elderly.

(b) *Quality of key personnel* (Maximum 20 points).

(1) The Secretary reviews each application for information that shows the quality of the key personnel the applicant plans to use on the project.

(2) The Secretary looks for information that shows—

(i) The qualifications of the project director;

(ii) The qualifications of each of the other key personnel to be used in the project;

(iii) The time that each person referred to in paragraphs (b)(2) (i) and (ii) of this section plans to commit to the project;

(iv) The extent to which the applicant, as part of its non-discriminatory employment practices, encourages applications for employment from persons who are members of groups that have been traditionally underrepresented, such as—

(A) Members of racial or ethnic minority groups;

(B) Women;

(C) Handicapped persons; and

(D) The elderly.

(3) To determine the qualifications of a person, the Secretary considers evidence of past experience and training

in fields related to the objectives of the project as well as other information that the applicant provides.

(c) *Budget and cost effectiveness* (Maximum 10 points).

(1) The Secretary reviews each application for information that shows that the project has an adequate budget and is cost effective.

(2) The Secretary looks for information that shows—

(i) The budget for the project is adequate to support the project activities;

(ii) Costs are reasonable in relation to the objectives of the project.

(d) *Evaluation plan* (Maximum 10 points).

(1) The Secretary reviews each application for information that shows the quality of the evaluation plan for the project.

(2) The Secretary looks for information that shows that the methods of evaluation are appropriate for the project and, to the extent possible, are objective and produce data that are quantifiable.

(e) *Adequacy of resources* (Maximum 5 points).

(1) The Secretary reviews each application for information that shows that the applicant plans to devote adequate resources to the project.

(2) The Secretary looks for information that shows that the facilities, equipment, and/or supplies that the applicant plans to use are adequate.

(f) *Specific program criteria* (Maximum 30 points).

(1) In addition to the criteria noted above, the Secretary reviews each application for information that shows that the project meets the specific program criteria.

(2) The Secretary looks for information that shows—

(i) The potential impact of the project on the development of modern foreign languages and area studies in American education. (Maximum 5 points).

(ii) The project's relevance to the applicant institution's educational goals and its relationship to the institution's program development in modern foreign languages and area studies. (Maximum 5 points).

(iii) The extent to which direct experience abroad is necessary to achieve the project's objectives and the effectiveness with which relevant host country resources will be utilized. (Maximum 5 points).

(iv) The project serves program priorities in the field of modern foreign languages and area studies. The Secretary will announce program priorities in each year's Notice of Closing Date. The Secretary looks for information that shows that the applicant addresses the program priorities for that year. (Maximum 15 points).

(22 U.S.C. 2452(b)(6); 2456(a)(2))

4. Section 662.43 is amended to read as follows:

§ 662.43 Selection criteria.

The Secretary uses the criteria in this section to evaluate applications for the purpose of recommending to the Board of Foreign Scholarships projects for funding under this subpart. The criteria are weighted and total 100 points.

(a) *Plan of operation* (Maximum 25 points).

(1) The Secretary reviews each application for information that shows the quality of the plan of operation for the project.

(2) The Secretary looks for information that shows—

(i) High quality in the design of the project;

(ii) An effective plan of management that insures proper and efficient administration of the project;

(iii) A clear description of how the objectives of the project relate to the purpose of the program;

(iv) The way the applicant plans to use its resources and personnel to achieve each objective;

(v) A clear description of how the applicant will provide equal access and treatment for eligible project participants who are members of groups that have been traditionally underrepresented, such as—

(A) Members of racial or ethnic minority groups;

(B) Women;

(C) Handicapped persons; and

(D) The elderly.

(b) *Quality of key personnel* (Maximum 20 points).

(1) The Secretary reviews each application for information that shows the quality of the key personnel the applicant plans to use on the project.

(2) The Secretary looks for information that shows—

(i) The qualifications of the project director;

(ii) The qualifications of each of the other key personnel to be used in the project;

(iii) The time that each person referred to in paragraphs (b)(2) (i) and (ii) of this section plans to commit to the project;

(iv) The extent to which the applicant, as part of its non-discriminatory employment practices, encourages applications for employment from persons who are members of groups that have been traditionally underrepresented, such as—

(A) Members of racial or ethnic minority groups;

(B) Women;

(C) Handicapped persons; and

(D) The elderly.

(3) To determine the qualifications of a person, the Secretary considers evidence of past experience and training in fields related to the objectives of the project, as well as other information that the applicant provides.

(c) *Budget and cost effectiveness* (Maximum 10 points).

(1) The Secretary reviews each application for information that shows that the project has an adequate budget and is cost effective.

(2) The Secretary looks for information that shows—

(i) The budget for the project is adequate to support the project activities;

(ii) Costs are reasonable in relation to the objectives of the project.

(d) *Evaluation plan* (Maximum 5 points).

(1) The Secretary reviews each application for information that shows the quality of the evaluation plan for the project.

(2) The Secretary looks for information that shows that the methods of evaluation are appropriate for the project and, to the extent possible, are objective and produce data that are quantifiable.

(e) *Adequacy of resources* (Maximum 5 points).

(1) The Secretary reviews each application for information that shows that the applicant plans to devote adequate resources to the project.

(2) The Secretary looks for information that shows that the facilities, equipment, and/or supplies that the applicant plans to use are adequate.

(f) *Specific program criteria* (Maximum 35 points).

(1) In addition to the criteria noted above, the Secretary reviews each application for information that shows that the project meets the specific program criteria.

(2) The Secretary looks for information that shows—

(i) The potential impact of the project on the applicant institution's plans for developing its modern foreign language and area studies programs. (Maximum 5 points).

(ii) The potential effective use of the results of the consultant's work following the completion of the project. (Maximum 5 points).

(iii) The appropriateness of the consultant's duties and the allocation of

time among the duties. (Maximum 5 points).

(iv) The number of faculty, students, and members of the relevant community who are expected to be affected by the consultant's activities. (Maximum 5 points).

(v) The likelihood that educational institutions other than the grantee will share the consultant's services and the extent to which such institutions have participated in helping define the nature of these services. (Maximum 5 points).

(vi) The adequacy of the arrangements made for coordinating the consultant's work under the supervision of a project director. (Maximum 5 points).

(vii) If the proposal is for curriculum development in area studies, a focus on area studies in which the applicant institution lacks adequate instructional materials and trained personnel. (Maximum 5 points).

(22 U.S.C. 2452(b)(6); 2456(a)(2))

[FR Doc. 80-37124 Filed 11-26-80; 8:45 am]

BILLING CODE 4000-01-M

---

34 CFR Part 764

Secretary's Discretionary Program

AGENCY: Department of Education.

ACTION: Final regulations.

SUMMARY: The Secretary issues regulations for the Secretary's Discretionary Program. This program assists in the development or demonstration of innovative methods, techniques, or practices which contribute to the solution of educational problems. The regulations include the criteria by which the Secretary evaluates applications.

EFFECTIVE DATE: These regulations are expected to take effect 45 days after they are transmitted to Congress. Regulations are usually transmitted to Congress several days before they are published in the Federal Register. The effective date is changed by statute if Congress takes certain adjournments. If you want to know the effective date of these regulations, call or write the Department of Education contact person.

FOR FURTHER INFORMATION CONTACT: Jan Solomon, Department of Education, Office of School Improvement, (Room 3700, Donohoe Building), 400 Maryland Avenue SW., Washington, D.C. 20202 Telephone: (202) 426-7220.

SUPPLEMENTARY INFORMATION: This program is authorized by the Education Amendments of 1978, under section 303 of Title III of the Elementary and Secondary Education Act. On March 12, 1980, the Commissioner of Education published a Notice of Proposed Rulemaking (NPRM) in the Federal Register (45 FR 16142). Interested persons were given 60 days to comment on the notice. Five persons submitted comments. The comments generally supported the provisions established in the NPRM for this program.

The provisions of these final regulations are substantially the same as the provisions of the NPRM. The evaluation criteria are unweighted; these regulations supercede EDGAR in this regard. Also the Secretary may, in any given year, publish a closing notice in the Federal Register that emphasizes particular funding areas.

For clarity, minor editorial changes have been made. For example, the term "mini-grants" has been changed to "small grants" to reflect more accurately the language of the statute.

In addition, certain other changes have been made in response to comments. The paragraphs below summarize the comments and the Secretary's response to them. The comments and responses are presented in the order of the sections to which they pertain. If section numbers differ from those in the NPRM, the NPRM section numbers are indicated in parentheses.

§ 764.2(b)(3) Who is eligible to apply for a grant?

Comment. One commenter objected to the inclusion of parent organizations as eligible applicants for small grants.

Response. No change has been made. Section 303(b) of the authorizing legislation includes parent organizations as eligible applicants for small grants.

§ 764.30 (§ 161.8) How does the Secretary evaluate an application?

Comment. One commenter opposed the use of unweighted criteria and recommended using both weighted criteria and a funding cut-off point.

Response. No change has been made. The regulations are specifically designed to provide the flexibility needed to evaluate the merits of a wide variety of projects. Depending upon the nature of proposed projects, the relative importance of a particular criterion may vary widely.

Comment. One commenter said the Secretary should not compare each application to other pending applications because that process would not provide a consistent standard for comparison. The commenter expressed concern that an "average" proposal, reviewed in the company of inferior proposals, would be funded, whereas that same proposal, reviewed in the company of outstanding proposals, would not be funded.

Response. No change has been made. The Secretary evaluates each application according to the criteria and, in doing so, compares the relative merits of the applications available for funding to assure that only the best are funded. However, the Secretary need not fund any particular number of projects in any fiscal year. For example, if none of the applications are of a sufficiently high quality, the Secretary is not bound to award any grants.

§ 764.31 (§ 161.9) What selection criteria does the secretary use?

Comment. One commenter suggested that the criteria were not appropriate for small-grants.

Response. No change has been made. The Secretary believes that the criteria are appropriate. The criteria are designed to maintain the overall flexibility provided by the Act. Because the criteria are unweighted, they may be applied in the most appropriate way to individual projects. For example, some criteria may be given less weight in evaluating small grants.

Comment. One commenter expressed concern that small school districts, which may lack technical proficiency in the preparation of applications, will not be able to successfully compete with large districts. The commenter suggested that specific language be included in the regulation that would allow the Secretary to focus upon the unique needs of a locality.

Response. No change has been made. The regulation does not prohibit the establishment of priorities that would allow the Secretary to focus on local needs. For example, the Secretary could specify in an application notice one or more specific educational problems to be addressed. Applicants, large or small, that demonstrate the capacity to address such problems may apply.

Further, the Secretary examines the overall quality of the proposed project and the nature of the educational need to be addressed in selecting applicants, not the skill in presentation. The Secretary does not feel that an applicant lacking experience in proposal writing will be unable to compete effectively for a grant.

Comment. One commenter praised the inclusion of "other public agencies" as eligible recipients but suggested that the criteria be changed to address specifically the coordination of other public social agencies and local school systems.

Response. No change has been made. The responsibility of grantees to

coordinate with other activities is described in EDGAR §§ 75.580–75.581.

Citation of Legal Authority.

A citation of statutory or other legal authority has been placed in parentheses on the line following each provision.

(Catalog of Federal Domestic Assistance Number 84.122, Secretary's Discretionary Program)

Shirley M. Hufstedler,

Secretary of Education.

Title 34 of the Code of Federal Regulations is amended by adding Part 764 as follows:

PART 764—SECRETARY'S DISCRETIONARY PROGRAM

Subpart A—General

Sec.
764.1 What is the Secretary's Discretionary Program?
764.2 Who is eligible to apply for a grant?
764.3 What regulations apply to this program?
764.4 What definitions apply to this program?

Subpart B—What Kinds of Projects Does the Department of Education Assist Under This Program?

764.10 What types of projects does this program support?

Subpart C—How Does One Apply for a Grant?

764.20 Application requirements.

Subpart D—How Does the Secretary Make a Grant?

764.30 How does the Secretary evaluate an application?
764.31 What selection criteria does the Secretary use?

Subpart E—What Conditions Must Be Met by a Grantee?

764.40 Participation of students enrolled in private non-profit schools.
764.41 Use of funds.

Authority: Section 303 of the Elementary and Secondary Education Act, as amended (20 U.S.C. 2943).

Subpart A—General

§ 764.1 What is the Secretary's Discretionary Program?

(a) The Secretary's Discretionary Program assists in the development or demonstration, or both, of innovative methods, techniques, or practices which contribute to the solution of educational problems. The program includes small grants to teachers, administrators, other educational personnel and parent organizations.

(b) These regulations govern—

(1) Funds appropriated by Congress under section 303(d)(1) of the Act; and

(2) Up to ten percent of the funds appropriated under Part B (Metric Education), Part C (Arts in Education), Part F (Youth Employment), Part G (Law-Related Education), Part H (Environmental Education), Part I (Health Education), Part J (Correction Education), and Part L (Biomedical Sciences) of the Act.

(c) These regulations do not govern programs that are supported by funds under (b)(1) or (2) of this section for which there are separate regulations.

(20 U.S.C. 2943)

§ 764.2 Who is eligible to apply for assistance?

(a) For grants to carry out innovative projects, eligible applicants include—

(1) State educational agencies (SEAs);

(2) Local educational agencies (LEAs);

(3) Other public agencies; or

(4) Nonprofit private agencies, organizations or institutions.

(b) For small grants to assist in the development or demonstration of innovative methods or techniques, eligible applicants include—

(1) Teachers;

(2) Administrators or other educational personnel; and

(3) Parent organizations.

(20 U.S.C. 2942 and 2943).

§ 764.3 What regulations apply to this program?

(a) *Regulations for grants.* The following regulations apply to grants made under the Secretary's Discretionary Program:

(1) The Education Division General Administrative Regulations (EDGAR) in 34 CFR Part 75 (Direct Grant Programs) and 34 CFR Part 77 (General), except that § 75.201(a)(3) and § 75.217(a) do not apply and §§ 75.100 through 75.102 do not apply unless a closing date for certain applications is published in the Federal Register.

(2) The regulations in this Part.

(b) *Regulations for procurement contracts.* The Secretary may, under certain conditions, issue contracts under the Secretary's Discretionary Program. These contracts are subject to—

(1) Procurement regulations in 41 CFR Chapters 1 and 34; and

(2) Requirements and criteria in particular requests for proposals (RFPs).

(20 U.S.C. 3474, 2943)

§ 764.4 What definitions apply to this program?

(a) *Definitions in EDGAR.* The following terms used in these regulations are defined in part 77:

Applicant
Application
Award
Budget
Local educational agency (LEA)
Nonprofit
Private
Project
Public
Secretary
State educational agency (SEA)

(b) *Program specific definitions.*

("Act" means Title III of the Elementary and Secondary Education Act of 1965, as amended.

"Small Grant" means grants of $25,000 or less as authorized by section 303(b) of the Act.

(20 U.S.C. 3474, 2943)

Subpart B—What Kinds of Projects Does the Department of Education Assist Under This Program?

§ 764.10 What types of projects does this program support?

(a) The Secretary funds two categories of projects—

(1) Projects to develop or demonstrate, or both, innovative techniques, methods, or approaches which will contribute to the solution of educational problems.

(2) Small grant projects to develop or demonstrate, or both, innovative methods or techniques which will contribute to the solution of educational problems.

(b)(1) The Secretary may publish a program announcement in the Federal Register that describes the particular area of education in which awards will be made, as well as any closing date that will apply.

(2) If the Secretary does not publish a program announcement in the Federal Register, funds may be awarded to support a project in any area of education.

(c) Even if the Secretary publishes a program announcement in the Federal Register the Secretary may support a project in an area which is not described in the program announcement if the Secretary concludes that the application—

(1) Satisfies the requirements in these regulations,

(2) Is of outstanding quality, and

(3) Shows a strong likelihood of meeting important national needs.

(20 U.S.C. 3474, 2943)

Subpart C—How Does One Apply for a Grant?

§ 764.20 Application requirements.

(a) The Secretary considers making a grant to an eligible applicant if it—

(1) Submits an application, and

(2) Complies with all applicable rules in EDGAR governing the submission of applications.

(b) An application from an LEA must comply with the requirements in §§ 75.138 through 75.141 of EDGAR concerning an open meeting on the application.

(c) If an employee of an LEA applies for a small grant, the application must contain assurances that the LEA—

(1) Has had an opportunity to comment on the application; and

(2) Will cooperate with the employee in carrying out the project.

(20 U.S.C. 3474, 2943)

Subpart D—How Does the Secretary Make a Grant?

§ 764.30 How does the Secretary evaluate an application?

(a) The Secretary evaluates an application on the basis of the unweighted criteria in § 764.31.

(b) On the basis of the evaluation criteria in § 764.31, the Secretary compares an application submitted in response to other applications submitted in response to the same program announcement.

(c) On the basis of the evaluation criteria in § 764.31, the Secretary compares an application not submitted in response to a program announcement to any other pending application for the same fiscal year that were also not submitted in response to a program announcement. The Secretary may also compare such applications to others received for a prior fiscal year.

(d) The Secretary may decline to fund an application that is eligible for funding under any other Department of Education program.

(20 U.S.C. 3474, 2943)

§ 764.31 What selection criteria does the Secretary use?

(a) *Plan of operation.*

(1) The Secretary reviews each application for information that shows the quality of the plan of operation for the project.

(2) The Secretary looks for information that shows—

(i) High quality in the design of the project;

(ii) An effective plan of management that insures proper and efficient administration of the project;

(iii) A clear description of how the objectives of the project relate to the purpose of the program;

(iv) The way the applicant plans to use its resources and personnel to achieve each objective;

(v) A clear description of how the applicant will provide equal access and treatment for eligible project participants who are members of groups that have been traditionally underrepresented, such as—

(A) Members of racial or ethnic minority groups;

(B) Women;

(C) Handicapped persons;

(D) The elderly; and

(vi) If the applicant is an LEA or SEA, a clear description of how the applicant will provide an opportunity for participation of students in nonprofit private elementary and secondary schools.

(b) *Quality of key personnel.*

(1) The Secretary reviews each application for information that shows the quality of the key personnel the applicant plans to use on the project.

(2) The Secretary looks for information that shows—

(i) The qualifications of the project director (if one is to be used);

(ii) The qualifications of each of the other key personnel to be used in the project;

(iii) The time that each person referred to in paragraphs (2) (i) and (ii) of this section plans to commit to the project;

(iv) The extent to which the applicant, as a part of its nondiscriminatory employment practices, encourages applications for employment from persons who are members of groups that have been traditionally underrepresented, such as—

(A) Members of racial or ethnic minority groups;

(B) Women;

(C) Handicapped persons;

(D) The elderly; and

(3) To determine the qualifications of a person, the Secretary considers evidence of past experience and training, in fields related to the objectives of the project, as well as other information that the applicant provides.

(c) *Budget and cost effectiveness.*

(1) The Secretary reviews each application for information that shows that the project has an adequate budget and is cost effective.

(2) The Secretary looks for information that shows—

(i) The budget for the project is adequate to support the project activities; and

(ii) Costs are reasonable in relation to the objectives of the project.

(d) *Evaluation plan.*

(1) The Secretary reviews each application for information that shows the quality of the evaluation plan for the project. (See § 75.590—Evaluation by the grantee.)

(2) The Secretary looks for information that shows methods of evaluation that are appropriate for the project and, to the extent possible, are objective and produce data that are quantifiable.

(e) *Adequacy of resources.*

(1) The Secretary reviews each application for information that shows that the applicant plans to devote adequate resources to the project.

(2) The Secretary looks for information that shows—

(i) The facilities that the applicant plans to use are adequate; and

(ii) The equipment and supplies that the applicant plans to use are adequate.

(f) *Problems addressed.* If the application is not submitted in response to a program announcement, the Secretary looks for information that shows the extent to which educational problems of national significance are addressed by the project.

(g) *Innovativeness.* The Secretary looks for information that shows the extent to which the project involves techniques that are innovative but build on current knowledge and research.

(h) *Applicant's commitment and capacity.* The Secretary looks for information that shows the extent to which the applicant demonstrates the commitment, capacity, and expertise to successfully carry out the project's purposes.

(i) *Model or demonstration.* The Secretary looks for information that shows the project's potential as a model or demonstration that will contribute to the solution of educational problems.

(20 U.S.C. 3474, 2943)

Subpart E—What Conditions Must be Met by Grantee?

§ 764.40 Participation of students enrolled in private non-profit schools.

Each SEA or LEA that receives a grant under this program, shall provide for participation by students enrolled in nonprofit private elementary and secondary schools. EDGAR establishes the rules for this participation (see EDGAR, § 75.650).

(20 U.S.C. 2942(b))

§ 764.41 Use of funds.

Direct and indirect costs incurred by a grantee in carrying out an approved project are subject to—

(a) The limitations and applicable cost principles provided or referred to in EDGAR; and

(b) The limitations that—

(1) A grantee may not use funds under this program for construction or remodeling costs; and

(2) Equipment costs may not exceed five percent of the grant amount.

(20 U.S.C. 3474, 2943)

[FR Doc. 80-37096 Filed 11-26-80; 8:45 am]
BILLING CODE 4000-01-M

LIBRARY OF CONGRESS

Copyright Office

37 CFR Part 201

[Docket RM 77-3A]

Compulsory License for Making and Distributing Phonorecords

AGENCY: Library of Congress, Copyright Office.

ACTION: Final regulations.

SUMMARY: This notice is issued to advise the public that the Copyright Office of the Library of Congress is adopting final regulations to implement section 115 of the Copyright Act of 1976, title 17 of the United States Code. That section establishes a compulsory license for the making and distribution of phonorecords of nondramatic musical works. The effect of the final regulations is to establish requirements governing the content and service of certain notices and Statements of Account to be filed by persons exercising the compulsory license.

EFFECTIVE DATE: December 29, 1980.

FOR FURTHER INFORMATION, CONTACT: Dorothy Schrader, General Counsel, Copyright Office, Library of Congress, Washington, D.C. 20559, (202) 287-8380.

SUPPLEMENTARY INFORMATION:

The Background of This Action

Section 115 of the Copyright Act provides that "[w]hen phonorecords of a nondramatic musical work have been distributed to the public in the United States under authority of the copyright owner, any other person may, by complying with the provisions of the section, obtain a compulsory license to make and distribute phonorecords of the work" for certain purposes. A compulsory license permits that use of a copyrighted work without the consent of the copyright owner if certain conditions are met and royalties paid.

Paragraphs (b) and (c) of section 115 direct the Copyright Office to issue regulations governing the content and filing of certain notices and Statements of Account under this section. On April 26, 1977, in accordance with an Advance Notice of Proposed Rulemaking (42 FR 16837), the Office held a public hearing aimed at formulating regulations under this section. After Considering the testimony given at the hearing and in supplemental statements, on December 29, 1977 (42 FR 64889), the Copyright Office issued interim regulations. After reviewing the public comments received in response to the interim regulations, the Copyright Office on September 28, 1978 (43 FR 44511): (1) Adopted amendments to the interim regulations; and (2) announced a public hearing to be held on November 28 and 29, 1978, to take testimony on the interim regulations as amended. The record remained open until January 31, 1979 (43 FR 57252), for receipt of additional written statements.

Most of the testimony and comments in connection with the November, 1978, proceedings were directed at one complex and difficult issue: the "point in time" when a phonorecord is to be considered "permanently distributed," thus making the statutory royalty due and payable. Paragraph (c)(2) of section 115 states that statutory royalties are payable for every phonorecord "made and distributed" under the license; it defines distribution as occurring when "the person exercising the compulsory license has voluntarily and permanently parted" with possession of the phonorecord. In laying out the Copyright Office's general responsibility under section 115, Congress has, in effect, mandated the Register of Copyrights to add specificity to this definition. The Report of the Judiciary Committee of the House of Representatives (H.R. Rep. No. 94-1476, 94th Cong., 2d Sess. pp. 110-111) states:

> Under existing practices in the record industry, phonorecords are distributed to wholesalers and retailers with the privilege of returning unsold copies for credit or exchange. As a result, the number of recordings that have been "permanently" distributed will not usually be known until some time—six or seven months on the average—after the initial distribution. In recognition of this problem, it has become a well-established industry practice, under negotiated licenses, for record companies to maintain reasonable reserves of the mechanical royalties due the copyright owners against which royalties on the returns can be offset. The Committee recognizes the possibility that, without proper safeguards, the maintenance of such reserves could be manipulated to avoid making payments of the full amounts owing to copyright owners. *Under these circumstances, the regulations prescribed by the Register of Copyrights should contain detailed provisions ensuring that the ultimate disposition of every phonorecord made under a compulsory license is accounted for, and that payment is made for every phonorecord "voluntarily and permanently" distributed. In particular, the Register should prescribe a point in time when, for accounting purposes under section 115, a phonorecord will be considered "permanently distributed,"* and should prescribe the situations in which a compulsory licensee is barred from maintaining reserves (e.g., situations in which the compulsory licensee has frequently failed to make payments in the past.) (Emphasis added)

In § 201.19(a)(4) of the Copyright Office's amended interim regulations, the Office sought to fulfill its responsibility to "prescribe a point in time when, for accounting purposes * * *, a phonorecord will be considered 'permanently distributed'," and to establish accounting requirements to assure full payment of all royalties to which copyright owners are entitled under the compulsory license. The record of the November, 1978, hearing and statements, which focused on this provision, proved illuminating; after giving careful consideration to the views of the various interested parties, the Copyright Office reached some tentative conclusions as to what our final regulations on this point should provide. On September 7, 1979, the Office published a notice in the Federal Register (44 FR 52260) to announce:

(1) The availability of a Background Paper outlining and discussing our conclusions; and (2) a public meeting to be held on October 19, 1979 to consider comments on the principles and conclusions embodied in the Background Paper.

The purpose of the October 19, 1979 meeting, as expressed in the public notice, was to "sharpen, narrow, and, if possible, settle remaining issues and thus to assist the Copyright Office in issuing final regulations on the subject." The meeting, and the supplemental comments filed after it, helped the Copyright Office in the revision, refinement, and clarification of its tenatative conclusions and in the drafting of regulatory language.

Above all, the meeting and comments convinced the Copyright Office of the need to take definitive action and to issue final regulations without further proceedings. The Copyright Office is also aware, however, that the parties remain divided on how to resolve this difficult question, and that the controversy over it is likely to continue. Under the circumstances, the Office emphasizes that these final regulations should be considered experimental and subject to reconsideration in the light of experience.

General Principles Underlying Final Regulations

Although the compulsory license for phonorecords (the so-called "mechanical license") has been a fixture of the copyright law since 1909, the shift in the obligation to pay royalties from parts "manufactured" to phonorecords "made and distributed" is new. Royalty

payments under voluntary, negotiated recording licenses have long been based on the "made and distributed" criterion. However, the application of this criterion in a compulsory context—accompanied by the definition of "distributed" in section 115(c)(2) and the directive in the House Report—presents a different and unprecedented situation. The record of these proceedings is full of warnings from both sides about the hazards that the Copyright Office must avoid as it ventures into accounting practices previously ungoverned by the copyright law.

The record industry's warnings are centered around two major concerns: (1) That the accounting system not be so complicated and burdensome that it negates the purpose of the compulsory license; and (2) that the system adopted not be one with a built-in likelihood of overpayments. The music publishers argue that: (1) The system must be tight enough to ensure against careless or colorable accounting practices and deliberate manipulation; and (2) the system must not only guarantee a full pay-out of all royalties due to copyright owners, but it must also require prompt payment and it must prevent manipulation to allow unjustified delays in royalty payments, thus depriving copyright owners of interest on the monies due them.

The Copyright Office has considered these arguments, and it has striven to take account of them. In preparing these final regulations, the guiding principle has been to make the compulsory license a workable tool while assuring that copyright owners will receive "full and prompt payment for all phonorecords made and distributed." (H.R. REP. NO. 94-1476, 94th Cong., 2d Sess. p. 110). Specifically, the Copyright Office has adopted three fundamental criteria:

(1) *The accounting procedures must not be so complicated as to make use of the compulsory license impractical.*

The Copyright Office believes that in carrying out its responsibilities under section 115, it has a duty to provide a system that is a realistic alternative to voluntary licensing. Neither the record-keeping nor the CPA audit requirements should be so burdensome or expensive as to undermine the Congressional intention by putting compulsory licensing out of the reach of record companies. The task is to provide a system that will function, not one so loaded with paperwork that it becomes prohibitive.

In line with this criterion, the Copyright Office has abandoned the requirement for tracking phonorecord shipments, which was embodied in the interim regulations. The Office now concludes that a requirement for actually tracking particular phonorecord shipments, and for determining whether phonorecords are destroyed or reshipped, is impractical. For the same reason the Office has not adopted two alternative suggestions as to methods for reducing monthly phonorecord reserves: (1) Systems of averaging outstanding reserve balances, which would require complicated recalculations of all balances each month; and (2) systems of customer-by-customer accounting, which would substantially multiply the necessary paperwork. These alternative accounting systems are discussed in more detail below. Although the Copyright Office is inclined to doubt that the use of any of them would be impossible in theory, it is convinced that, as a practical matter, requirement of any of them would put compulsory licensing beyond the means of many record companies.

(2) *The accounting system must insure full payment, but not overpayment.*

Despite their obvious dissatisfaction, copyright owners must accept the legislative decisions embodied in section 115: (1) To base royalties on phonorecords "made and distributed"; (2) to define "distributed" in a way that clearly permits the setting up of reserves against which return can be credited; and (3) to permit the final pay-out to be deferred to a "point in time" to be provided by Copyright Office regulations. Within this legislative framework, copyright owners are justified in demanding establishment of an accounting system that guarantees payment for all phonorecords that are either distributed without a right of return or that are not returned within a stated period.

Like Congress, the Copyright Office is conscious of the often-heard charges of careless or colorable accounting practices by certain record companies which, it is alleged, have deprived copyright owners of substantial royalties in the past. The Office agrees that the regulatory system it adopts must be tight enough to guard against this sort of abuse and to assure "full and prompt" payment of royalties. However, the Office cannot accept the further argument that Congress actually envisioned an over-all system in which frequent overpayments were to be expected, as a means for balancing possible negligence, dishonesty, or manipulation by certain record companies. The Office believes that the statutory requirement for an annual CPA audit, coupled with our regulatory requirements including the application of "generally accepted accounting principles" (GAAP) to the recognition of revenue from the sale of phonorecords, should go a long way toward assuring copyright owners payment of all monies to which they are entitled—that is, statutory royalties for all phonorecords shipped, minus phonorecords returned within a reasonable time-frame. Since actual tracking of phonorecords or shipments is impractical, the Copyright Office has adopted FOFI (first-out-first-in) as the accounting convention that most closely conforms to the Congressional intent. The Office believes that an accounting system based on FOFI, audited by a CPA in accordance with GAAP, will result in full payments to copyright owners, but will minimize the likelihood of overpayments that would arise more often under LOFI (last-out-first-in).

(3) *The accounting system must insure prompt payment.*

Although section 115 contemplates that royalty payments for a certain percentage of phonorecords shipped will be deferred and held in reserve to be credited against returns, Congress also clearly intended that reserves not be held beyond a reasonable time—that, even with deferral, payments should still be "prompt." The House Report on the revision bill emphasizes the "particular" importance of the task entrusted to the Copyright Office: "to prescribe a point in time when * * * a phonorecord will be 'permanently distributed' * * *"

In its amended interim regulations, the Copyright Office fixed this "point in time"—the outer limit for holding reserves—at one year measured from the month of a particular shipment of phonorecords. In the preliminary conclusions expressed in its September 7, 1979, Background Paper, the Office adhered to this formula in the face of arguments from the record industry that it be substantially lengthened and from the copyright owners that it be substantially shortened. For reasons to be discussed in detail below, however, the Copyright Office has now concluded that the twelve-month "point in time" should be reduced to nine months. The Copyright Office believes that a nine-month cut-off will bring faster royalty payouts to copyright owners, thus coming closer to the requirement for "full and prompt payment," while not resulting in more overpayments by record companies.

Certain Conclusions From the Background Paper Adopted

Several of the conclusions underlying the formula for calculating royalties, as presented in our Background Paper of

September 7, 1979, were challenged at the October, 1979, meeting. The Copyright Office's consideration of the arguments put forward at the meeting has led the Office to confirm three of these conclusions:

(1) To require the application of FOFI, rather than LOFI, to the number of returned phonorecords;

(2) To apply the formula presented in our Background Paper on a general basis rather than a customer-by-customer basis; and

(3) Not to include in the regulations an explicit requirement for the refund of overpayments.

Our reasons for each of these conclusions can be summarized briefly as follows:

(1) *Adoption of FOFI.*

A principal element of the formula for calculating royalties presented in the Copyright Office's Background Paper is the application of an accepted accounting convention—either FOFI (first-out-first-in) or LOFI (last-out-first-in)—to the number of returned phonorecords in order to reduce and possibly eliminate particular monthly phonorecord reserves. As illustrated in the appendices to the Background Paper, the Copyright Office applied both FOFI and LOFI to nine different shipment and return patterns to determine which of the two accounting conventions best meets the goal of assuring full remuneration without overpayment. The Office's conclusion, which was supported by the documentation, was that FOFI more accurately reflected actual sales in various situations, and that overpayments of royalties were more likely to occur under LOFI than under FOFI.

During the public meeting, it became evident that the representatives of music publishers (the National Music Publishers Association and the Harry Fox Agency, hereafter referred to as NMPA/HFA) had strong objections to the adoption of FOFI as the applicable accounting convention. Their views, which were formalized in their Supplemental Comments, focused on two objections: (1) The loss of earned interest during the period that royalties are held in reserve by the compulsory licensee; and (2) the ability of the licensee to manipulate reserves under FOFI to delay payment to music copyright owners even further.

The Copyright Office recognizes that, particularly in a time of high inflation and fluctuating interest rates, the timing of royalty payments is an important consideration in assuring that copyright owners are fully renumerated. It is true that, if compulsory licensees were free, as a matter of course, to overestimate the number of returns and to establish artificially high reserves, royalty payments on some phonorecords would be delayed and interest would be lost. The formula here adopted for the calculation and payment of royalties, however, does not give licensees that freedom. On the contrary, the regulations require the establishment of reserves based on reasonable estimates of returns made in accordance with generally accepted accounting principles (GAAP). Furthermore, in situations where the compulsory licensee has correctly established reserves or has established a low reserve, there is no possibility of any loss of earned interest. The Copyright Office believes that the application of GAAP will reduce the likelihood of unusually high reserves, thereby minimizing the possibility for losses of earned interest.

In their testimony and Supplemental Comments, NMPA/HFA also sought to demonstrate the possibility of manipulatory abuse under FOFI. The example presented by NMPA/HFA does show a potential for abuse; it should also be noted that similar abuse could occur under LOFI, though on a smaller scale. The Copyright Office is not convinced, however, that the hypothetical situation posed in the example chosen by NMPA/HFA is, in fact, a realistic one. When considered against the practicalities of multiple monthly shipments and returns, the costs involved in manipulation, the possible penalties for detected manipulation, and the requirement for CPA certification, the likelihood of substantial manipulative abuse does not seem great.

In their Supplemental Comments, NMPA/HFA suggested the alternative use of proportional averaging as a compromise to resolve the FOFI/LOFI dispute. This suggestion seemed worth exploring, and we have studied the possible application of both straight averging and of proportional averaging as a means of offsetting particular monthly phonorecord reserves by returned phonorecords.

On the basis of its studies, the Copyright Office concluded that neither straight averaging nor proportional averaging reflected actual sales in various situations any more accurately than FOFI. Furthermore, the Office believes that the added complexities necessitated by the adoption of either straight or proportional averaging would outweigh any benefits that possibly might be derived from one of these systems. For these reasons, the Copyright Office has decided to adopt FOFI.

(2) *Application of the formula on a general basis.*

The foundation of the Copyright Office's formula for calculating royalties is the application of FOFI to the reduction of separate and distinct monthly phonorecord reserves. A particular monthly phonorecord reserve is comprised of reserves taken against *all* applicable shipments made during the month covered by the Monthly Statement; there is no differentiation among specific customers.

In their Supplemental Comments, NMPA/HFA urged that—

> * * * compulsory licensees should only be permitted to credit phonorecords returned from a particular customer against royalty reserves maintained by the compulsory licensee with respect to prior shipments of the same phonorecord to such customer (Supplemental Comments by the NMPA and HFA, November 29, 1979, p. 30.)

Similarly, NMPA/HFA suggested that the carrying forward and adjustment of a negative reserve balance in order to apply overpayments against royalty payments only should be permitted on a customer-by-customer basis.

The Copyright Office recognizes that it may be possible to construct simulated shipment models purporting to show inadequacies in the system of applying phonorecord returns against the earliest eligible phonorecord reserve, regardless of customer. The Office remains unconvinced, however, that simulations of this sort are realistic or that application of our formula on a general rather than a customer-by-customer basis would result in any substantial harm to music copyright owners. At the same time, the adjustment of reserves on a customer-by-customer basis would require a substantial increase in recordkeeping and would add enormous complexity to the estimation of reserves and the compulsory license mechanism in general. Moreover, adjustments on a customer-by-customer basis would, in many instances, artificially and unnecessarily increase the number of phonorecords ultimately considered "voluntarily distributed" beyond the number actually sold. For these reasons, the Copyright Office has decided against applying the formula on a customer-by-customer basis.

(3) *No express requirement for the refund of overpayments.*

In its Background Paper, the Copyright Office indicated that it rejected a request by the Recording Industry Association of America (hereafter referred to as RIAA) to specify in the regulations that refunds may be available where a compulsory licensee finds it has made an overpayment of

royalties. The Office did, however, repeat from its Notice accompanying the amended interim regulations that—

> * * * we believe that resolution of this issue in particular cases is best left to negotiation between the parties, or application of general legal principles in the appropriate forum. (43 FR 44515.)

During the public meeting and in their Supplemental Comments, the RIAA again urged us to include a specific requirement for refunds for overpayments. On the other hand, the NMPA/HFA strongly disapproved of—

> * * * any such reference—which implicitly or explicitly accords recognition to the incorrect view that compulsory licensees have any claim whatsoever for refunds to any royalty overpayments. (Supplemental Comments by the NMPA and HFA, November 19, 1979, p. 37.)

In its earlier comments on this point, the Copyright Office did not intend, implicitly or explicitly, to suggest that music copyright owners have any legal obligation to make refunds for royalty overpayments. When the Office mentioned "negotiation between the parties" in this context, it was thinking of cases involving litigation or other forms of legal process where the amount of overpayment might be a factor to consider in settling a dispute; the Office did not mean to imply that, in a strict compulsory license situation, either the licensee has any right or the copyright owner any obligation to negotiate concerning overpayments. Without prejudging the issue in any way, however, the Copyright Office continue to believe that resolution of this issue in particular cases is best left to application of general legal principles in the appropriate forum.

Changes and Clarifications in the Regulatory Formula for Calculating Royalties

The October, 1979, meeting and the Supplemental Comments submitted by the parties convinced the Copyright Office that several aspects of the proposed regulatory formula, as presented in the Background Paper, needed clarification. In addition, arguments submitted by representatives of the music copyright owners led the Office to reconsider other components of the formula. As a result of this process, the Copyright Office has made three major changes and clarifications in the formula for computing royalties:

(1) *Segregation of Phonorecords Shipped into Three Categories.*

In their Supplemental Comments, NMPA/HFA suggested that the formula for calculating royalties—

> * * * should be revised so that reserves are subtracted from the gross number of phonorecords relinquished from possession for purposes of sale *prior to the* computation of the total gross number of phonorecords shipped in a given month. This will reduce the likelihood that the reserve size will inadvertently be determined on the basis of all phonorecords shipped—not simply those shipped for purposes of sale (Emphasis supplied in text) (Supplemental Comments by the NMPA and HFA, November 19, 1979, p. 40.)

While this calculation step was implicit under the formula presented in its Background Paper, the Copyright Office recognizes that inadvertent errors and misunderstandings would be less likely to occur if the differing types of shipments were specifically segregated, and if reserves were computed and subtracted before gross shipments were figured into the formula.

Earlier in these proceedings, NMPA/HFA offered the following proposal:

> If phonorecords shipped on which royalties have not been paid are returned * * * and such phonorecords are subsequently reshipped for sale in the secondary market, royalties should be paid on the basis of 100% of the records shipped—*i.e.*, no reserves should be permitted with respect to these shipments. The rationale for this is clear. When phonorecords are reshipped for sale in the secondary market, record companies do not generally permit their return. And * * * virtually all phonorecords shipped in the secondary market will be sold by the record companies. At this point, there is no reason for the royalty payments to be withheld from copyright owners on the false premise that they are needed to offset returns which will not be forthcoming. (Supplemental Statement by the NMPA and HFA, January 31, 1979, pp. 39–40.)

The Copyright Office agreed in its Background Paper that, in the situation described, the accounting practices adopted should not permit the taking of reserves where no right of return exists, but the Office suggested that this result should be achieved by the application of GAAP rather than by any specific provision in the regulations. The Copyright Office has now reached a different conclusion: having recognized the desirability of computing and subtracting reserves before figuring in shipments on which no reserve can be taken, the Office has revised its general formula to take account of both of these proposals by NMPA/HFA. Under the new formula, the compulsory licensee must determine the monthly totals of three distinct types of shipments: (1) Phonorecords shipped for sale with a right of return; (2) phonorecords shipped for sale without a right of return; and (3) phonorecords shipped for purposes other than sale. It is only with respect to the first type of shipment that reserves can be taken.

(2) *The GAAP Alternative*

In their Supplemental Comments, NMPA/HFA state:

> The Copyright Office has clearly indicated that the point in time when a phonorecord is to be considered "permanently distributed" for purposes of the payment of reserved royalties to copyright owners is one year (or such shorter time that may be mandated by GAAP) as measured from the month of a particular shipment of phonorecords. We feel that in the Discussions and in the Background Paper, the GAAP alternative is not given due emphasis. We request the Copyright Office to specifically state it does not expect compulsory licensees to treat the rule simply as a strict one-year rule—*i.e.*, that it fully expects compliance with the obligation to pay royalties on reserves sooner, if such would be mandated by GAAP. (Supplemental Comments by the NMPA and HFA, November 19, 1979, p. 39).

Ever since the early stages of these proceedings, the Copyright Office has intended the reserve holding period—the "point in time" beyond which reserves could not be held and would have to be paid out—to be an outside limit; if GAAP were to mandate an earlier pay-out, it would control. The Office agrees that, in concentrating upon what happens when the specified reserve holding period ends and the reserve lapses, it may not have given enough emphasis to the "GAAP alternative" in its discussions of the problem. We have, therefore, made it explicit in the final regulations.

Moreover, because the operation of the compulsory license adopted under these final regulations differs from the operation contemplated in the amended interim regulations, the "GAAP alternative" will also operate differently. Under the amended interim regulations, specific shipments of records were supposed to be tracked and all reserves accumulated into one aggregate group; a reserve reduction, if mandated by GAAP, would affect the aggregate reserve group. The final regulations have replaced the actual tracking of phonorecord shipments and the aggregate accumulation of reserves with a system based on the application of FOFI to separate and distinct monthly phonorecord reserves. Under the final regulations, a reserve reduction, if mandated by GAAP, will affect these separate reserves. The Copyright Office has decided that applying FOFI to reduce reserves in this situation would be consistent with the decision to apply FOFI to reduce reserves where phonorecords are returned to the compulsory licensee. Accordingly, the Copyright Office has revised paragraphs (a)(5)(iii) and (b) of § 201.19 of the final

regulations not only to state the "GAAP alternative" explicitly, but also to set forth the procedures for carrying it out.

(3) *Cut-off at Nine Months Rather Than One Year.*

The "point in time" which must be fixed as the outer limit for the holding of reserves has been set in our amended interim regulations at one year, measured from the month of a particular shipment of phonorecords. The Copyright Office's Background Paper proposed that the Office adhere to this cut-off point, and rejected proposals by NMPA/HFA to measure the period from the release date of the recording, or alternatively, from the date of distribution following a period when the recording had been deleted from the compulsory licensee's active catalog. The Copyright Office's position on this point was that "measuring the period from actual shipments brings us much closer to the Congressional intent." With respect to the length of the period itself, NMPA/HFA have consistently proposed, throughout this proceeding, that the point at which there has been a "permanent parting with possession" of a phonorecord by the compulsory license should be set at six months. In our September 28, 1978, Notice we stated that—

> * * * we can find no justification for the 6 months suggestion, and a period shorter than 1 year would appear to impose an unjustifiable burden on compulsory licensees. (43 FR 44516.)

We reiterated this view in our Background Paper.

In their Supplemental Comments, NMPA/HFA made some new points with respect to the designation of the "point in time":

> Recent developments in the record industry itself support the notion that the normal time lag between shipments and returns is probably as slight as four months. RIAA has recently adopted a rule to the effect that phonorecords will be certified as having reached the coveted sales standards that qualify for gold and platinum certification at the close of the period terminating 120 days following release * * * In addition, RCA Records has recently adopted strict limitations regarding the number of phonorecords which their customers may return. A customer's return allowance, under the new RCA system, will be a percentage of its gross sales during the fourth preceding month. This is clear evidence that RCA believes returns will come in within four months following shipment. (Supplemental Comments by the NMPA and HFA, November 19, 1979, pp. 19–20.)

The Association of Independent Music Publishers also put forward new arguments relating to the sales history of popular records and suggested that six months should be considered the outer limit for the maintenance of reserves.

Recognizing that the economy in general, and the record industry and its business practices in particular, were in a state of flux, the Copyright Office felt that these new arguments justified a review of the one-year period. A principal concern in this review was the impact that a holding period of shorter than one year would have on the number of phonorecords that ultimately would be considered "voluntarily distributed" under the general formula. To explore this, the Office recalculated the nine shipment-and-return models contained in the appendices of the Background Paper (which used a one-year cut-off) on the basis of six-month and nine-month holding periods. The Office found that a six-month holding period measured under FOFI resulted in a greater number of phonorecords considered "voluntarily distributed" and, consequently, in an overpayment of royalties in one third of the shipment models. On the other hand, a nine-month holding period measured under FOFI continued to reflect accurately actual sales in the various models while achieving a faster royalty payout to the music copyright owner in the three cases where an unusually high reserve was taken by the compulsory licensee.

As the result of this analysis of the whole problem, the Copyright Office has decided to reduce the one-year holding period to nine months in § 201.19(a)(5)(iii)(B) of the regulations and in the formula for computing royalties found in § 201.19(e)(4)(ii). The Office believes that this change should reduce the potential for damage through reserve manipulation and minimize the loss of interest while providing for a faster pay-out of lapsed reserves to music owners. At the same time, the Office's studies indicate that this modification will not result in unjustifiable overpayments by compulsory licensees.

Statement of the Formula

On the basis of the various conclusions discussed above, and on the premises summarized in the next section of this Notice, the Copyright Office has made several changes in the four-step formula developed in the Background Paper. These changes have been incorporated into a five-step formula to be used in computing monthly royalty payments under a compulsory license. This formula, which is outlined here, is set out in detail in § 201.19(e)(4)(ii) of the final regulations.

Formula for Calculating Royalties:

Step 1: Compute the total number of phonorecords that, during the given month, were shipped for purposes of sale with a privilege of return. (This total does *not* include: (1) Any phonorecords relinquished from possession for purposes of sale but *without* a privilege of return, or (2) any phonorecords relinquished from possession for purposes other than sale.)

Step 2: Subtract the number that have been reserved in the given month. (First, *multiply* the subtotal from Step 1 by the percentage reserve level established under GAAP, and then *deduct* the result from that same subtotal.)

Step 3: Add the total of all phonorecords shipped during the month that were not counted in Step 1. (This is the total of: (1) All phonorecords relinquished from possession for purposes of sale but without a privilege of return, *plus* (2) all phonorecords relinquished from possession for purposes other than sale.)

Step 4: Make any necessary adjustments with respect to reserves for previous months; three types of adjustment may be possible:

(a) *Sales revenue "recognized":* If in the given month, revenue from the sale of phonorecords shipped in any *previous* month is being "recognized" under GAAP, *add* the total of such phonorecords.

(b) *Lapsed reserves:* If there are any phonorecords that were reserved in the *ninth previous month* and have not been offset under FOFI by actual returns, *add* the total of such phonorecords.

(c) *Reduction of negative reserve balance:* If the aggregate reserve balance for all previous months is a *negative* amount, subtract the number of phonorecords shipped during the given month that have been used to reduce the negative reserve balance.

Step 5: Multiply by the statutory royalty rate. (*Multiply* the result of Step 3, as adjusted if necessary by Step 4, by the statutory rate of 2¾ cents or ½ cent per minute or fraction of playing time, whichever is larger; *this gives you the monthly royalty payment.*)

Explanation of Certain Premises Underlying the Formula

The following points are intended to help in interpreting and applying the formula:

Step 1: The figure arrived at in this step should represent every phonorecord shipped for purposes of sale during the month with the privilege of return—that is, every shipment for sale where the recipient was given the right to return unsold phonorecords for credit or exchange. Put another way, it should represent the total of all phonorecords shipped during the month *minus* two categories of shipments: (1) Phonorecords shipped for sale without any privilege of return, and (2) phonorecords shipped for purposes other than sale. No reserves can be taken against these latter two categories

of shipments, which will be figured into the formula in Step 3.

Step 2: This step involves the calculation and deduction of the monthly reserve.

(a) With respect to phonorecords shipped for sale with a privilege of return, the compulsory licensee establishes a "reserve level"—a percentage figure representing an estimate of returns, which must be made in accordance with generally accepted accounting principles (GAAP). The reserve level percentage for a particular month is a cumulative figure; in effect, it represents the best realistic estimate, in combination with estimates made for earlier months, of the ultimate percentage of returns—an estimate of final percentage, out of all phonorecords of the sound recording that are shipped for sale with a privilege of return, that will, in fact, be returned.

(b) Under GAAP this cumulative reserve level need not remain constant; each month it may be changed upward or downward in response to the sales history of the record or other variables. However, fluctuations in the reserve level cannot be used as the basis for a retroactive increase in the number of phonorecords remaining in previously established monthly phonerecord reserves. Moreover, even if the compulsory licensee is swamped with returns from previous shipments, the reserve level for a given month cannot be set under GAAP at more than 100%.

(c) Each month an amount, representing the reserve level percentage of the phonorecords shipped for sale during the month accompanied by a right of return, is placed in that month's phonorecord reserve. In Step 2 of the formula, this amount is deducted from the subtotal arrived at in Step 1.

(d) Note that the amounts in Step 2 are *gross* rather than *net;* no deductions are made in Step 2 for actual returns. This represents a change from § 201.19(a)(4)(ii)(B) of our amended interim regulations (43 FR 44518), under which payment was to be made on the basis of "net sales" as opposed to "gross sales." This netting of sales, before any adjustment of reserves takes place, utilizes a procedure akin to the LOFI ("last-out-first-in") accounting convention. Since, as was discussed earlier in this Notice, the Copyright Office has concluded that application of LOFI is not desirable in meeting the statutory objectives, the final regulations require that reserve and royalty calculations be based on gross, rather than net, figures.

Step 3: Here you add in all of the remaining phonorecords shipped during the month: (1) All phonorecords shipped for sale that are not accompanied by the right to return unsold phonorecords for credit or exchange; and (2) all phonorecords shipped for purposes other than sale. The first of these categories will, in most cases, include phonorecords shipped to secondary and tertiary markets. The second category will include phonorecords shipped voluntarily for purposes such as promotion, gift, rental, loan, lease, etc. For both of these categories, the full amount of the royalty is payable upon shipment; since no returns can be anticipated no reserves can be set up.

Step 4: The subtotal arrived at in Step 3 will represent the monthly total of voluntarily distributed phonorecords *unless* an adjustment in that figure is necessary. The necessity for making an adjustment arises in three specific situations:

(a) *Sales revenue "recognized."* Under the formula, it may be possible for revenue from the sale of phonorecords shipped in *previous* months and placed in a phonorecord reserve to be "recognized" under GAAP in the month covered by the Statement. In this case, that number of phonorecords is *added* to the subtotal resulting from Step 3 of the formula. Correspondingly, particular monthly phonorecord reserves are reduced to offset these "recognized" phonorecords. How the latter process would work in actual accounting practice is explained in § 201.19(b) of our final regulations.

(b) *Lapsed reserves.* Assuming they have not been offset by actual returns or already paid out as "recognized" sales under GAAP, any reserves remaining from the ninth previous month must be added to the subtotal from Step 3. As noted earlier, the Copyright Office has adopted FOFI as the means of offsetting returns against reserves and determining the amount of lapsed reserves that must be paid out after the nine-month holding period. How this would work in actual accounting practice is described in § 201.19(c) of our final regulations.

(c) *Reduction of negative reserve balance.* If, at any point, the total number of phonorecords that have been returned is greater than the total number of phonorecords that have been placed in the various monthly reserves, the reserve balance will consist of a negative figure representing overpayments. Rather than wiping out the negative balance at the end of the nine months, the final regulations provide for a negative reserve balance to be carried indefinitely and to be *reduced* by applying it against shipments of the same recording under the same compulsory license. In this situation, the shipment of a phonorecord used to reduce the negative reserve balance would not be considered "voluntarily distributed" and no royalties need be paid for such shipment. For this reason, the number of phonorecords so shipped will be deducted from the subtotal resulting in Step 3. It should be noted that, unlike monthly phonorecord reserves the aggregate number of phonorecords represented in a negative reserve balance is accumulated into one group. Since there are no time limitations placed on the life of a negative reserve balance, it is unnecessary to separate this balance into separate and distinct monthly balances. How this would work in actual accounting practice is explained in § 201.19(c)(4) of our final regulations.

Step 5: This is a simple calculation, multiplying the subtotal from Step 3, with whatever adjustments necessary from Step 4, by the applicable statutory rate.

Remaining Issues

In addition to the accounting questions discussed above, there are several other issues remaining to be settled in these final regulations. These issues pertain to: (1) Instances where the compulsory licensee is barred from maintaining reserves; (2) the preparation of standard forms for Notices of Intention and Statements of Account; (3) the filing and service of Statements of Account and royalty fees; and (4) the retention of documentation by the compulsory licensee. The Copyright Office has considered the arguments regarding all of these issues and has reached the following conclusions, which are being implemented in these final regulations.

(1) *Barring of the maintenance of reserves.* As part of the Copyright Office's regulatory authority under section 115, Congress directed the Office to "prescribe situations in which a compulsory licensee is barred from maintaining reserves * * *." (H.R. REP. No. 94-1476, 94th Cong., 2d Sess. p. 111.) Section 201.19(d) of the final regulations (paragraph (a)(5) of the amended interim regulations) specifies these situations. In their Supplemental Comments, NMPA/HFA proposed that this paragraph should—

> * * * be revised to provide that if, within the preceding ten years, the person or entity exercising a compulsory license has failed to make timely delivery of any Annual Statement of Account (with the required certification by an independent auditor) with respect to any compulsory license, that person or entity should be barred from the maintenance of reserves. (Supplemental

Comments by the NMPA and HFA, November 19, 1979, p. 35.)

The Copyright Office believes that the legal implications and consequences of a compulsory licensee's failure to make timely delivery of the Annual Statement of Account with the required certification by a certified public accountant only should have whatever effect a court may determine. On this assumption, it would be improper for the Copyright Office to lay down a hard and fast rule that would automatically bar the maintenance of reserves in these cases. The regulaton as issued bars the maintenance of reserves in any case—

* * * where, within three years before the phonorecord was relinquished from possession, the person or entity exercising the compulsory license has had final judgment entered against it for failure to pay royalties for the reproduction of copyrighted music on phonorecords, or within such period has been definitively found in any proceeding involving bankruptcy, insolvency, receivership, assignment for the benefit of creditors, or similar action, to have failed to pay such royalties * * *

If a court determines that a compulsory licensee's failure to make timely delivery of the Annual Statement of Account, with the required certification, is tantamount to a failure to pay royalties, the regulation as issued should protect adequately the interests of music copyright owners.

(2) *Forms.* Throughout this proceeding, both NMPA/HFA and RIAA have urged us to prepare standard forms for Notices of Intention and Statements of Account. The use of a prescribed form may be of assistance to record companies in understanding and meeting their obligations under the compulsory license, and to music copyright owners in reviewing the information reported. However, the Copyright Office does not believe that the number of compulsory licenses presently in operation, or expected in the immediate future, warrant the substantial time and expense necessary to develop standard forms. For this reason, the Office has decided to refrain from developing standard forms at this time. If the use of mechanical compulsory licenses increases substantially in the future, the Office will reconsider its decision at that time.

(3) *Filing and service of Statements of Account and royalty fees.* Earlier in these proceedings, NMPA/HFA took issue with the Copyright Office's rules regarding the service of Statements of Account and royalty fees where the compulsory licensee does not know the address of the copyright owner or where the Statement and fee are served by registered or certified mail but are returned to the sender. They urged that compulsory licensees be required, in these cases, to file the Statement of Account and deposit the royalty fee in the Copyright Office for the benefit of the copyright owner. In the Notice accompanying the amended interim regulations, the Copyright Office concluded that "it would be appropriate to open the records of the Copyright Office to the filing of Monthly and Annual Statements of Account" (43 FR 44514), and amended the interim regulations accordingly. However, the Office did "not believe it would be proper to require the filing of statements of account in the Copyright Office in these cases." (43 FR 44514). Further, the Copyright Office felt that it would be "impossible for our Office, without specific statutory authority, to act as a depository for royalty fees owed to copyright owners." (43 FR 44514). In their Supplemental Statement dated January 31, 1979, NMPA/HFA suggested, in the alternative, that the regulations be—

* * * amended to make mandatory the filing of a notice with the Copyright Office by a compulsory licensee in the event the compulsory licensee knows the address of the copyright owner to be incorrectly stated in the Copyright Office records by reason of the return of mail sent to such address * * * If a payment to a copyright owner was included in the mail that had been so returned to a compulsory licensee, the notice filed by the compulsory licensee should so state that such payment has been returned. In such event, until the correct address of the copyright owner is ascertained, the regulations should require the filing of all monthly and annual statements of account with the Copyright Office and all royalty payments to be deposited by the compulsory licensee in an escrow account maintained by it for the benefit of the copyright owner. It is anticipated that this procedure will enable HFA in the course of its periodic examination of the Copyright Office's compulsory license filing register, to become aware of these situations and attempt to provide the correct addresses of copyright owners involved so payment may be properly made. (Supplemental Statement by the NMPA/HFA, January 31, 1979, pp. 41–42.)

The Copyright Office continues to believe that it would not be proper to *require* the filing of Statements of Account in the Copyright Office in these cases. In addition, it is beyond the Copyright Office's specific statutory authority under section 115 to require the maintenance of escrow accounts for receipt of royalty payments.

Paragraph (e)(3) of section 201.18 of our final regulations states:

If the Notice (of Intention) is sent by certified or registered mail to the last address of the copyright owner shown by the records of the Copyright Office and is returned to the sender because the copyright owner is no longer located at that address or has refused to accept delivery, the original Notice as sent shall be filed in the Copyright Office * * *

Since, as stated in their Supplemental Statement, HFA plans to examine periodically our compulsory license filing register, the required submission to our Office, in these cases, of Notices of Intention plus the optional submission of Statements of Account should safeguard adequately the interests of music copyright owners.

(4) *Documentation.* Section 201.19(d) of the amended interim regulations requires that compulsory licensees keep "all records and documents necessary and appropriate" to support the information given in Statements of Account for a period of three years from the service of the Annual Statement. Throughout these proceedings, and most recently in their Statement dated November 24, 1978, HFA has requested the Copyright Office to extend this period to six years to take into account the possible application of State statutes of limitations which may apply to causes of action based on fraud. In response to their request, the Office studied the document retention requirements of various federal agencies and the possible application of State statutes to the mechanical compulsory license. After a thorough review of this question, the Copyright Office adheres to the position expressed in the Notice accompanying the interim regulations that "we do not believe that the mere possibility of such action warrants the very substantial extension proposed" (43 FR 44515). In its Statement dated November 24, 1978, HFA again requested that the regulations require that access to these records and documents be made available to the copyright owner for inspection. Here, too, the Copyright Office maintains the position expressed in the Notice accompanying the amended interim regulations that "we believe that rules governing access to business records (and, by implication, the consequences of refusal) are beyond our authority to establish. In any event, judicial procedures—and possible other alternatives—are available to copyright owners to secure such access." (43 FR 44515.)

Final Regulation. In consideration of the foregoing, Part 201 of 37 CFR, Chapter II is amended by adding new §§ 201.18 and 201.19 to read as follows:

§ 201.18 Notice of intention to obtain a compulsory license for making and distributing phonorecords of nondramatic musical works.

(a) *General.* (1) A "Notice of Intention" is a notice identified in section 115(b) of title 17 of the United States Code, as amended by Pub. L. 94-553, and required by that section to be served on a copyright owner, or in certain cases to be filed in the Copyright Office, to obtain a compulsory license to make and distribute phonorecords of nondramatic musical works.

(2) A separate Notice of Intention shall be served or filed for each nondramatic musical work embodied, or intended to be embodied, in phonorecords made under the compulsory license.

(3) For the purposes of this section, the term "copyright owner," in the case of any work having more than one copyright owner, means any one of the coowners. In such cases, the service of a Notice of Intention on any one of the coowners under paragraph (e)(2) of this section shall be sufficient with respect to all coowners.

(b) *Form.* The Copyright Office does not provide printed forms for the use of persons serving or filing Notices of Intention.

(c) *Content.* (1) A Notice of Intention shall be clearly and prominently designated, at the head of the notice, as a "Notice of Intention to Obtain a Compulsory License for Making and Distributing Phonorecords," and shall include a clear statement of the following information:

(i) The full legal name of the person or entity intending to obtain the compulsory license, together with all fictitious or assumed names used by such person or entity for the purpose of conducting the business of making and distributing phonorecords;

(ii) The full address, including a specific number and street name or rural route, of the place of business of the person or entity intending to obtain the compulsory license. A post office box or similar designation will not be sufficient for this purpose except where it is the only address that can be used in that geographic location;

(iii) A statement of the nature of each and every business organization that the person or entity intending to obtain the compulsory license will use for the purpose of conducting the business of making and distributing phonorecords under the license (for example, a corporation, a partnership, or an individual proprietorship); additionally:

(A) If the person or entity intending to obtain the compulsory license is a corporation registered with the Securities and Exchange Commission under section 12 of the Securities and Exchange Act of 1934, the Notice shall so state.

(B) If the person or entity intending to obtain the compulsory license is a corporation that is not registered with the Securities and Exchange Commission under section 12 of the Securities and Exchange Act of 1934, the Notice shall include a list of the names of the corporation's directors and officers, and the names of each beneficial owner of twenty-five percent (25%) or more of the outstanding securities of the corporation.

(C) In all other cases, the Notice shall include the names of each entity or individual owning a beneficial interest of twenty-five percent (25%) or more in the entity intending to exercise the compulsory license. If a corporate entity is named in response to this paragraph (C), then: If that corporation is registered with the Securities and Exchange Commission under section 12 of the Securities and Exchange Act of 1934, the Notice shall so state; if that corporation is not so registered, the Notice shall include a list of the names of the corporation's directors and officers, and the names of each beneficial owner of twenty-five percent (25%) or more of the outstanding securities of that corporation;

(iv) The fiscal year of the person or entity intending to obtain the compulsory license. If that fiscal year is a calendar year, the Notice shall state that this is the case;

(v) The title of the nondramatic musical work embodied or intended to be embodied in phonorecords made under the compulsory license, and the names of the author or authors of such work if known;

(vi) The types of all phonorecord configurations already made (if any) and expected to be made under the compulsory license (for example: Single disk, long-playing disk, cassette, cartridge, reel-to-reel, or a combination of them);

(vii) The expected date of initial distribution of phonorecords already made (if any) or expected to be made under the compulsory license;

(viii) The name of the principal recording artist or group actually engaged or expected to be engaged in rendering the performances fixed on phonorecords already made (if any) or expected to be made under the compulsory license;

(ix) The catalog number or numbers, and label name or names, used or expected to be used on phonorecords already made (if any) or expected to be made under the compulsory license; and

(x) In the case of phonorecords already made (if any) under the compulsory license, the date or dates of such manufacture.

(2) A "clear statement" of the information listed in paragraph (c)(1) of this section requires a clearly intelligible, legible, and unambiguous statement in the Notice itself and (subject to paragraph (c)(1)(iii)(A) of this section) without incorporation by reference of facts or information contained in other documents or records.

(3) Where information is required to be given by paragraph (c)(1) of this section "if known" or as "expected", such information shall be given in good faith and on the basis of the best knowledge, information, and belief of the person signing the Notice. If so given, later developments affecting the accuracy of such information shall not affect the validity of the Notice.

(d) *Signature.* The Notice shall be signed by the person or entity intending to obtain the compulsory license. If that person or entity is a corporation, the signature shall be that of a duly authorized officer of the corporation; if that person or entity is a partnership, the signature shall be that of a partner. The signature shall be accompanied by the printed or typewritten name of the person signing the Notice, and by the date of signature.

(e) *Filing and Service.* (1) If, with respect to the nondramatic musical work named in the Notice of Intention, the registration or other public records of the Copyright Office do not identify the copyright owner of such work and include an address for such owner, the Notice shall be filed in the Copyright Office. Notices of Intention submitted for filing shall be accompanied by a fee of $6.00. Notices of Intention will be filed by being placed in the appropriate public records of the Licensing Division of the Copyright Office. The date of filing will be the date when a proper Notice and fee are both received in the Copyright Office. A written acknowledgement of receipt and filing will be provided to the sender. Upon request and payment of an additional fee of $4.00, a Certificate of Filing will be provided to the sender.

(2) If the registration or other public records of the Copyright Office do identify the copyright owner of the nondramatic musical work named in the Notice of Intention and include an address for such owner, the Notice shall be served on such owner by certified mail or by registered mail sent to the last address for such owner shown by the records of the Office; it shall not be

necessary to file a copy of the Notice in the Copyright Office in this case.

(3) If the Notice is sent by certified or registered mail to the last address for the copyright owner shown by the records of the Copyright Office and is returned to the sender because the copyright owner is no longer located at the address or has refused to accept delivery, the original Notice as sent shall be filed in the Copyright Office. Notices of Intention submitted for filing under this paragraph (e)(3) shall be submitted to the Licensing Division of the Copyright Office, and shall be accompanied by a brief statement that the Notice was sent to the last address for the copyright owner shown by the records of the Copyright Office but was returned, and by appropriate evidence that it was sent by certified or registered mail to that address. In these cases, the Copyright Office will specially mark its records to consider the date the original Notice was mailed, as shown by the evidence mentioned above, as the date of filing. A written acknowledgement of receipt and filing will be provided to the sender. No filing fee will be required in the case of Notices filed under this paragraph (e)(3). Upon request and payment of a fee of $4.00, a Certificate of Filing will be provided to the sender.

§ 201.19 Royalties and statements of account under compulsory license for making and distributing phonorecords of nondramatic musical works.

(a) *Definitions.* (1) A "Monthly Statement of Account" is a statement accompanying monthly royalty payments identified in section 115(c)(3) of title 17 of the United States Code, as amended by Pub. L. 94–553, and required by that section to be made under the compulsory license to make and distribute phonorecords of nondramatic musical works.

(2) An "Annual Statement of Account" is a statement identified in section 115(c)(3) of title 17 of the United States Code, as amended by Pub. L. 94–553, and required by that section to be filed for every compulsory license to make and distribute phonorecords of nondramatic musical works.

(3) For the purposes of this section, the term "copyright owner," in the case of any work having more than one copyright owner means any one of the coowners. In such cases, the service of a Statement of Account, on one coowner under paragraph (e)(7) or (f)(7) of this section shall be sufficient with respect to all coowners.

(4) For the purposes of this section, a "compulsory licensee" is a person or entity exercising the compulsory license to make and distribute phonorecords of nondramatic musical works as provided under section 115 of title 17 of the United States Code, as amended by Pub. L. 94–553.

(5) A phonorecord is considered "voluntarily distributed" if the compulsory licensee has voluntarily and permanently parted with possession of the phonorecord. For this purpose, and subject to the provisions of paragraph (d) of this section, a compulsory licensee shall be considered to have "permanently parted with possession" of a phonorecord made under the license:

(i) In the case of phonorecords relinquished from possession for purposes other than sale, at the time at which the compulsory licensee actually first parts with possession;

(ii) In the case of phonorecords relinquished from possession for purposes of sale without a privilege of returning unsold phonorecords for credit or exchange, at the time at which the compulsory licensee actually first parts with possession;

(iii) In the case of phonorecords relinquished from possession for purposes of sale accompanied by a privilege of returning unsold phonorecords for credit or exchange: (A) At the time when revenue from a sale of the phonorecord is "recognized" by the compulsory licensee; or (B) nine months from the month in which the compulsory licensee actually first parted with possession, whichever occurs first. For these purposes, a compulsory licensee shall be considered to "recognize" revenue from the sale of a phonorecord when sales revenue would be recognized in accordance with generally accepted accounting principles as expressed by the American Institute of Certified Public Accountants or the Financial Accounting Standards Board, whichever would cause sales revenue to be recognized first.

(6) A "phonorecord reserve" comprises the number of phonorecords, if any, that have been relinquished from possession for purposes of sale in a given month accompanied by a privilege of return, as described in paragraph (a)(5)(iii) of this section, and that have not been considered voluntarily distributed during the month in which the compulsory licensee actually first parted with their possession. The initial number of phonorecords comprising a phonorecord reserve shall be determined in accordance with generally accepted accounting principles as expressed by the American Institute of Certified Public Accountants or the Financial Accounting Standards Board.

(7) A "negative reserve balance" comprises the aggregate number of phonorecords, if any, that have been relinquished from possession for purposes of sale accompanied by a privilege of return, as described in paragraph (a)(5)(iii) of this section, and that have been returned to the compulsory licensee, but because all available phonorecord reserves have been eliminated, have not been used to reduce a phonorecord reserve.

(b) *Accounting Requirements Where Sales Revenue is "Recognized."* Where under paragraph (a)(5)(iii)(A) of this section, revenue from the sale of phonorecords is "recognized" during any month after the month in which the compulsory licensee actually first parted with their possession, said compulsory licensee shall reduce particular phonorecord reserves by the number of phonorecords for which revenue is being "recognized," as follows:

(1) If the number of phonorecords for which revenue is being "recognized" is smaller than the number of phonorecords comprising the earliest eligible phonorecord reserve, this phonorecord reserve shall be reduced by the number of phonorecords for which revenue is being "recognized." Subject to the time limitations of subparagraph (B) of this § 201.19(a)(5)(iii), the number of phonorecords remaining in this reserve shall be available for use in subsequent months.

(2) If the number of phonorecords for which revenue is being "recognized" is greater than the number of phonorecords comprising the earliest eligible phonorecord reserve but less than the total number of phonorecords comprising all eligible phonorecord reserves, the compulsory licensee shall first eliminate those phonorecord reserves, beginning with the earliest eligible phonorecord reserve and continuing to the next succeeding phonorecord reserves, that are completely offset by phonorecords for which revenue is being "recognized." Said licensee shall then reduce the next succeeding phonorecord reserve by the number of phonorecords for which revenue is being "recognized" that have not been used to eliminate a phonorecord reserve. Subject to the time limitations of subparagraph (B) of this § 201.19(a)(5)(iii), the number of phonorecords remaining in this reserve shall be available for use in subsequent months.

(3) If the number of phonorecords for which revenue is being "recognized" equals the number of phonorecords comprising all eligible phonorecord reserves, the person or entity exercising the compulsory license shall eliminate all of the phonorecord reserves.

(c) *Accounting Requirements for Offsetting Phonorecord Reserves with Returned Phonorecords.* (1) In the case of a phonorecord that has been relinquished from possession for purposes of sale accompanied by a privilege of return, as described in paragraph (a)(5)(iii) of this section, where the phonorecord is returned to the compulsory licensee for credit or exchange before said compulsory licensee is considered to have "permanently parted with possession" of the phonorecord under paragraph (a)(5) of this section, the compulsory licensee may use such phonorecord to reduce a "phonorecord reserve," as defined in paragraph (a)(6) of this section.

(2) In such cases, the compulsory licensee shall reduce particular phonorecord reserves by the number of phonorecords that are returned during the month covered by the Monthly Statement of Account in the following manner:

(i) If the number of phonorecords that are returned during the month covered by the Monthly Statement is smaller than the number comprising the earliest eligible phonorecord reserve, the compulsory licensee shall reduce this phonorecord reserve by the total number of returned phonorecords. Subject to the time limitations of subparagraph (B) of this § 201.19(a)(5)(iii), the number of phonorecords remaining in this reserve shall be available for use in subsequent months.

(ii) If the number of phonorecords that are returned during the month covered by the Monthly Statement is greater than the number of phonorecords comprising the earliest eligible phonorecord reserve but less than the total number of phonorecords comprising all eligible phonorecord reserves, the compulsory licensee shall first eliminate those phonorecord reserves, beginning with the earliest eligible phonorecord reserve, and continuing to the next succeeding phonorecord reserves, that are completely offset by returned phonorecords. Said licensee shall then reduce the next succeeding phonorecord reserve by the number of returned phonorecords that have not been used to eliminate a phonorecord reserve. Subject to the time limitations of subparagraph (B) of this § 201.19(a)(5)(iii), the number of phonorecords remaining in this reserve shall be available for use in subsequent months.

(iii) If the number of phonorecords that are returned during the month covered by the Monthly Statement is equal to or is greater than the total number of phonorecords comprising all eligible phonorecord reserves, the compulsory licensee shall eliminate all eligible phonorecord reserves. Where said number is greater than the total number of phonorecords comprising all eligible phonorecord reserves, said compulsory licensee shall establish a "negative reserve balance," as defined in paragraph (a)(7) of this section.

(3) Except where a negative reserve balance exists, a separate and distinct phonorecord reserve shall be established for each month during which the compulsory licensee relinquishes phonorecords from possession for purposes of sale accompanied by a privilege of return, as described in paragraph (a)(5)(iii) of this section. In accordance with subparagraph (B) of this § 201.19(a)(5)(iii), any phonorecord remaining in a particular phonorecord reserve nine months from the month in which the particular reserve was established shall be considered "voluntarily distributed"; at that point, the particular monthly phonorecord reserve shall lapse and royalties for the phonorecords remaining in it shall be paid as provided in paragraph (e)(4)(ii) of this section.

(4) Where a negative reserve balance exists, the aggregate total of phonorecords comprising it shall be accumulated into a single balance rather than being separated into distinct monthly balances. Following the establishment of a negative reserve balance, any phonorecords relinquished from possession by the compulsory licensee for purposes of sale or otherwise, shall be credited against such negative balance, and the negative reserve balance shall be reduced accordingly. The nine month limit provided by subparagraph (B) of this § 201.19(a)(5)(iii) shall have no effect upon a negative reserve balance; where a negative reserve balance exists, relinquishment from possession of a phonorecord by the compulsory licensee at any time shall be used to reduce such balance, and shall not be considered a "voluntary distribution" within the meaning of paragraph (a)(5) of this section.

(5) In no case shall a phonorecord reserve be establish while a negative reserve balance is in existence; conversely, in no case shall a negative reserve balance be established before all available phonorecord reserves have been eliminated.

(d) *Situations in Which a Compulsory Licensee is Barred From Maintaining Reserves.* Notwithstanding any other provisions of this section, in any case where, within three years before the phonorecord was relinquished from possession, the compulsory licensee has had final judgment entered against it for failure to pay royalties for the reproduction of copyrighted music on phonorecords, or within such period has been definitively found in any proceeding involving bankruptcy, insolvency, receivership, assignment for the benefit of creditors, or similar action, to have failed to pay such royalties, that compulsory licensee shall be considered to have "Permanently parted with possession" of a phonorecord made under the license at the time at which that license at the time at which that licensee actually first parts with possession. For these purposes the "compulsory licensee," as defined in § 201.19(a)(4), shall include:

(1) In the case of any corporation, the corporation or any director, officer, or beneficial owner of twenty-five percent (25%) or more of the outstanding securities of the corporation;

(2) In all other cases, any entity or individual owning a beneficial interest of twenty-five percent (25%) or more in the entity exercising the compulsory license.

(e) *Monthly Statements of Account.*—(1) *Forms.* The Copyright Office does not provide printed forms for the use of persons serving Monthly Statements of Account.

(2) *General Content.* A Monthly Statement of Account shall be clearly and prominently identified as a "Monthly Statement of Account Under Compulsory License for Making and Distributing Phonorecords," and shall include a clear statement of the following information:

(i) The period (month and year) covered by the Monthly Statement;

(ii) The full legal name of the compulsory licensee, together with all fictitious or assumed names used by such person or entity for the purpose of conducting the business of making and distributing phonorecords;

(iii) The full address, including a specific number and street name or rural route, of the place of business of the compulsory licensee. A post office box or similar designation will not be sufficient for this purpose, except where it is the only address that can be used in that geographic location;

(iv) The title or titles of the nondramatic musical work or works embodied in phonorecords made under the compulsory license and owned by the copyright owner being served with the Monthly Statement and the name of the author or authors of such work or works, if known;

(v) For each nondramatic musical work that is owned by the same

copyright owner being served with the Monthly Statement and that is embodied in phonorecords covered by the compulsory license, a detailed statement of all of the information called for in paragraph (e)(3) of this section;

(vi) The total royalty payable for the month covered by the Monthly Statement, computed in accordance with the requirements of this section and the formula specified in paragraph (e)(4) of this section, together with a statement of account showing in detail how the royalty was computed; and

(vii) In any case where the compulsory licensee falls within the provisions of paragraph (d) of this section, a clear description of the action or proceeding involved, including the date of the final judgment or definitive finding described in that paragraph.

(3) *Specific Content of Monthly Statements: Identification and Accounting of Phonorecords.* (i) The information called for by paragraph (e)(2)(v) of this section shall, with respect to each nondramatic musical work, include a separate listing of each of the following items of information:

(A) The number of phonorecords made during the month covered by the Monthly Statement;

(B) The number of phonorecords that, during the month covered by the Monthly Statement and regardless of when made, were either:

relinquished from possession for purposes other than sale;

relinquished from possession for purposes of sale without any privilege of returning unsold phonorecords for credit or exchange;

relinquished from possession for purposes of sale accompanied by a privilege of returning unsold phonorecords for credit or exchange;

returned to the compulsory licensee for credit or exchange; or

placed in a phonorecord reserve (except that if a negative reserve balance exists give either the number of phonorecords added to the negative reserve balance, or the number of phonorecords relinquished from possession that have been used to reduce the negative reserve balance);

(C) The number of phonorecords, regardless of when made, that were relinquished from possession during a month earlier than the month covered by the Monthly Statement but that, during the month covered by the Monthly Statement either have had revenue from their sale "recognized" under paragraph (a)(5)(iii) of this section, or were comprised in a phonorecord reserve that lapsed after nine months under subparagraph (B) of this § 201.19(a)(5)(iii).

(ii) Each of the items of information called for by paragraph (e)(3)(i) of this section shall also include, and if necessary shall be broken down to identify separately, the following:

(A) The catalog number or numbers and label name or names, used on the phonorecords;

(B) The names of the principal recording artist or group engaged in rendering the performances fixed on the phonorecords;

(C) The playing time on the phonorecords of each nondramatic musical work covered by the statement; and

(D) Each phonorecord configuration involved (for example: single disk, long-playing disk, cartridge, cassette, reel-to-reel).

(4) *Royalty Payment and Accounting.* (i) The total royalty called for by paragraph (e)(2)(vi) of this section shall, as specified in section 115(c)(2) of title 17 of the United States Code, as amended by Pub. L. 94–553, be payable for every phonorecord "voluntarily distributed" during the month covered by the Monthly Statement.

(ii) The amount of the royalty payment shall be calculated in accordance with the following formula:

Step 1: Compute the number of phonorecords shipped for sale with a privilege of return. This is the total of phonorecords that, during the month covered by the Monthly Statement, were relinquished from possession by the compulsory licensee, accompanied by the privilege of returning unsold phonorecords to the compulsory licensee for credit or exchange. This total does *not* include: (1) Any phonorecords relinquished from possession by the compulsory licensee for purposes of sale without the privilege of return; and (2) any phonorecords relinquished from possession for purposes other than sale.

Step 2: Subtract the number of phonorecords reserved. This involves deducting, from the subtotal arrived at in Step 1, the number of phonorecords that have been placed in the phonorecord reserve for the month covered by the Monthly Statement. The number of phonorecords reserved is determined by multiplying the subtotal from Step 1 by the percentage reserve level established under GAAP. This step should be skipped by a compulsory licensee barred from maintaining reserves under paragraph (d) of this section.

Step 3: Add the total of all phonorecords that were shipped during the month and were not counted in Step 1. This total is the sum of two figures: (1) The number of phonorecords that, during the month covered by the Monthly Statement, were relinquished from possession by the compulsory licensee for purposes of sale, without the privilege of returning unsold phonorecords to the compulsory licensee for credit or exchange; and (2) the number of phonorecords relinquished from possession by the compulsory licensee, during the month covered by the Monthly Statement, for purposes other than sale.

Step 4: Make any necessary adjustments for sales revenue "recognized," lapsed reserves, or reduction of negative reserve balance during the month. If necessary, this step involves adding to or subtracting from the subtotal arrived at in Step 3 on the basis of three possible types of adjustments:

(a) Sales revenue "recognized." If, in the month covered by the Monthly Statement, the compulsory licensee "recognized" revenue from the sale of phonorecords that had been relinquished from possession in an earlier month, the number of such phonorecords is *added* to the Step 3 subtotal;

(b) Lapsed reserves. If, in the month covered by the Monthly Statement, there are any phonorecords remaining in the phonorecord reserve for the ninth previous month (that is, any phonorecord reserves from the ninth previous month that have not been offset under FOFI, the first-out-first-in accounting convention, by actual returns during the intervening months), the reserve lapses and the number of phonorecords in it is *added* to the Step 3 subtotal.

(c) Reduction of negative reserve balance. If, in the month covered by the Monthly Statement, the aggregate reserve balance for all previous months is a negative amount, the number of phonorecords relinquished from possession by the compulsory during that month and used to reduce the negative reserve balance is *subtracted* from the Step 3 subtotal.

Step 5: Multiply by the statutory royalty rate. The total monthly royalty payment is obtained by multiplying the subtotal from Step 3, as adjusted if necessary by Step 4, by the statutory royalty rate of 2¾ cents or ½ cent per minute or fraction of playing time, whichever is larger.

(iii) Each step in computing the monthly payment, including the arithmetical calculations involved in each step, shall be set out in detail in the Monthly Statement.

(5) *Clear Statements.* The information required by paragraphs (e) (2) and (3) of this section involves intelligible, legible, and unambiguous statements in the Monthly Statements of Account itself and without incorporation of facts or information contained in other documents or records.

(6) *Oath and Signature.* Each Monthly Statement of Account shall include the handwritten signature of the compulsory licensee. If that compulsory licensee is a corporation, the signature shall be that of a duly authorized officer of the corporation; if that compulsory licensee is a partnership, the signature shall be that of a partner. The signature shall be accompanied by: (i) The printed or typewritten name of the person signing the Monthly Statement of Account; (ii) the date of signature; (iii) if the compulsory licensee is a partnership or a corporation, by the title or official position held in the partnership or corporation by the person signing the Monthly Statement of Account; (iv) a

certification of the capacity of the person signing; and (v) the following statement:

I certify that I have examined this Monthly Statement of Account and that all statements of fact contained herein are true, complete, and correct to the best of my knowledge, information, and belief, and are made in good faith.

(7) *Service.* (i) Each Monthly Statement of Account shall be served on the copyright owner to whom or which it is directed, together with the total royalty for the month covered by the Monthly Statement, by certified mail, or by registered mail on or before the 20th day of the immediately succeeding month. It shall not be necessary to file a copy of the Monthly Statement in the Copyright Office.

(ii) (A) In any case where a Monthly Statement of Account is sent by certified mail or registered mail and is returned to the sender because the copyright owner is not located at that address or has refused to accept delivery, or in any case where an address for the copyright owner is not known, the Monthly Statement of Account, together with any evidence of mailing, may be filed in the Licensing Division of the Copyright Office. Any Monthly Statement of Account submitted for filing in the Copyright Office shall be accompanied by a brief statement of the reason why it was not served on the copyright owner. A written acknowledgement of receipt and filing will be provided to the sender.

(B) The Copyright Office will not accept any royalty fees submitted with Monthly Statements of Account under this § 202.19(e)(7)(ii).

(C) Neither the filing of a Monthly Statement of Account in the Copyright Office, nor the failure to file such Monthly Statement, shall have effect other than that which may be attributed to it by a court of competent jurisdiction.

(D) No filing fee will be required in the case of Monthly Statements of Account submitted to the Copyright Office under this § 201.19(e)(7)(ii). Upon request and payment of a fee of $4.00, a Certificate of Filing will be provided to the sender.

(iii) A separate Monthly Statement of Account shall be served for each month during which there is any activity relevant to the payment of royalties under this section 115 of title 17, United States Code, as amended by Pub. L. 94-553, and under this section. The Annual Statement of Account identified in paragraph (f) of this section does not replace any Monthly Statement of Account.

(f) *Annual Statements of Account.*—(1) *Forms.* The Copyright Office does not provide printed forms for the use of persons serving Annual Statements of Account.

(2) *Annual Period.* Any Annual Statement of Account shall cover the full fiscal year of the compulsory licensee.

(3) *General Content.* An Annual Statement of Account shall be clearly and prominently identified as an "Annual Statement of Account Under Compulsory License for Making and Distributing Phonorecords," and shall include a clear statement of the following information:

(i) The fiscal year covered by the Annual Statement;

(ii) The full legal name of the compulsory licensee, together with all fictitious or assumed names used by such person or entity for the purpose of conducting the business of making and distributing phonorecords;

(iii) A statement of the nature of the business organization used by the compulsory licensee in connection with the making and distribution of phonorecords (for example, a corporation, a partnership, or an individual proprietorship); additionally:

(A) If the compulsory licensee is a corporation registered with the Securities and Exchange Commission under section 12 of the Securities and Exchange Act of 1934, the Annual Statement shall state that this is the case.

(B) If the compulsory licensee is a corporation that is not registered with the Securities and Exchange Commission under section 12 of the Securities and Exchange Act of 1934, the Annual Statement shall include a list of the names of the corporation's directors and officers, and the names of each beneficial owner of twenty-five percent (25%) or more of the outstanding securities of the corporation.

(C) In all other cases, the Annual Statement shall include the names of each entity or individual owning a beneficial interest of twenty-five percent (25%) or more in the entity exercising the compulsory license. If a corporate entity is named in response to this paragraph (C), then: If that corporation is registered with the Securities and Exchange Commission under section 12 of the Securities and Exchange Act of 1934, the Annual Statement shall so state; if that corporation is not so registered, the Annual Statement shall include a list of the corporation's directors and officers, and the names of each beneficial owner of twenty-five percent (25%) or more of the outstanding securities of that corporation;

(iv) The full address, including a specific number and street name or rural route, or the place of business of the compulsory licensee. A post office box or similar designation will not be sufficient for this purpose except where it is the only address that can be used in that geographic location;

(v) The title or titles of the nondramatic musical work or works embodied in phonorecords made under the compulsory license and owned by the copyright owner being served with the Annual Statement and the name of the author or authors of such work or works, if known;

(vi) The playing time of each nondramatic musical work on such phonorecords;

(vii) For each nondramatic musical work that is owned by the same copyright owner being served with the Annual Statement and that is embodied in phonorecords covered by the compulsory license, a detailed statement of all of the information called for in paragraph (f)(4) of this section;

(viii) The total royalty payable for the fiscal year covered by the Annual Statement computed in accordance with the requirements of this section, together with a statement of account showing in detail how the royalty was computed. For these purposes, the applicable royalty as specified in section 115(c)(2) of title 17 of the United States Code, as amended by Pub. L. 94-553, shall be payable for every phonorecord "voluntarily distributed" during the fiscal year covered by the Annual Statement;

(ix) The total sum paid under Monthly Statements of Account by the compulsory licensee to the copyright owner being served with the Annual Statement during the fiscal year covered by the Annual Statement; and

(x) In any case where the compulsory license falls within the provisions of paragraph (d) of this section, a clear description of the action or proceeding involved, including the date of the final judgment or definitive finding described in that paragraph.

(4) *Specific Content of Annual Statements: Identification and Accounting of Phonorecords.* (i) The information called for by paragraph (f)(3)(vii) of this section shall, with respect to each nondramatic musical work, include a separate listing of each of the following items of information separately stated and identified for each phonorecord configuration (for example, single disk, long playing disk, cartridge, cassette, or reel-to-reel) made:

(A) The number of phonorecords made through the end of the fiscal year covered by the Annual Statement, including any made during earlier years;

(B) The number of phonorecords which have never been relinquished

from possession of the compulsory licensee through the end of the fiscal year covered by the Annual Statement;

(C) The number of phonorecords involuntarily relinquished from possession (as through fire or theft) of the compulsory licensee during the fiscal year covered by the Annual Statement and any earlier years, together with a description of the facts of such involuntary relinquishment;

(D) The number of phonorecords "voluntarily distributed" by the compulsory licensee during all years before the fiscal year covered by the Annual Statement;

(E) The number of phonorecords relinquished from possession of the compulsory licensee for purposes of sale during the fiscal year covered by the Annual Statement accompanied by a privilege of returning unsold records for credit or exchange, but not "voluntarily distributed" by the end of that year;

(F) The number of phonorecords "voluntarily distributed" by the compulsory licensee during the fiscal year covered by the Annual Statement, together with (*1*) the catalog number or numbers, and label name or names, used on such phonorecords; and (*2*) the names of the principal recording artists or groups engaged in rendering the performances fixed on such phonorecords.

(ii) If the information given under paragraphs (A) through (F) of this § 201.19(f)(4)(i) does not reconcile, the Annual Statement shall also include a clear and detailed explanation of the difference. For these purposes, the information given under such paragraphs shall be considered not to reconcile if, after the number of phonorecords given under paragraphs (B), (C), (D), and (E) are added together and that sum is deducted from the number of phonorecords given under paragraph (A), the result is different from the amount given under paragraph (F).

(5) *Clear Statement.* The information required by paragraph (f)(3) of this section involves intelligible, legible, and unambiguous statements in the Annual Statement of Account itself and [subject to paragraph (f)(3)(iii)(A)] without incorporation by reference of facts or information contained in other documents or records.

(6) *Signature and Certification.* (i) Each Annual Statement of Account shall include the handwritten signature of the compulsory licensee. If that compulsory licensee is a corporation, the signature shall be that of a duly authorized officer of the corporation; if that compulsory licensee is a partnership, the signature shall be that of a partner. The signature shall be accompanied by: (A) The printed or typewritten name of the person signing the Annual Statement of Account; (B) the date of signature; (C) if the compulsory licensee is a partnership or a corporation, by the title or official position held in the partnership or corporation by the person signing the Annual Statement of Account; and (D) a certification of the capacity of the person signing.

(ii)(A) Each Annual Statement of Account shall also be certified by a licensed Certified Public Accountant. Such certification shall consist of the following statement:

We have examined the attached "Annual Statement of Account Under Compulsory License For Making and Distributing Phonorecords" for the fiscal year ended (date) of (name of the compulsory licensee) applicable to phonorecords embodying (title or titles of nondramatic musical works embodied in phonorecords made under the compulsory license) made under the provisions of section 115 of title 17 of the United States Code, as amended by Pub. L. 94-553, and applicable regulations of the United States Copyright Office. Our examination was made in accordance with generally accepted auditing standards and accordingly, included such other auditing procedures as we considered necessary in the circumstances.

In our opinion the Annual Statement of Account referred to above presents fairly the number of phonorecords embodying each of the above-identified nondramatic musical works made under compulsory license and voluntarily distributed by (name of the compulsory licensee) during the fiscal year ending (date), and the amount of royalties applicable thereto under such such compulsory license, on a consistent basis and in accordance with the above cited law and applicable regulations published thereunder.

_____

(City and State of Execution)

_____

(Signature of Certified Public Accountant or CPA Firm)

_____

Certificate Number

_____

Jurisdiction of Certificate

_____

(Date of Opinion)

(B) The certificate shall be signed by an individual, or in the name of a partnership or a professional corporation with two or more shareholders. The certificate number and jurisdiction are not required if the certificate is signed in the name of a partnership or a professional corporation with two more shareholders.

(7) *Service.* (i) Each Annual Statement of Account shall be served on the copyright owner to whom or which it is directed by certified mail or by registered mail on or before the twentieth day of the third month following the end of the fiscal year covered by the Annual Statement. It shall not be necessary to file a copy of the Annual Statement in the Copyright Office. An Annual Statement of Account shall be served for each fiscal year during which at least one Monthly Statement of Account was required to have been served under paragraph (e)(7) of this section.

(ii) In any case where the amount required to be stated in the Annual Statement of Account under paragraph (f)(3)(viii) of this section is greater than the amount stated in that Annual Statement under paragraph (f)(3)(ix) of this section, the difference between such amounts shall be delivered to the copyright owner together with the service of the Annual Statement. The delivery of such sum does not require the copyright owner to accept such sum, or to forego any right, relief, or remedy which may be available under law.

(iii) (A) In any case where an Annual Statement of Account is sent by certified mail or registered mail and is returned to the sender because the copyright owner is not located at that address or has refused to accept delivery, or in any case where an address for the copyright owner is not known, the Annual Statement of Account, together with any evidence of mailing, may be filed in the Licensing Division of the Copyright Office. Any Annual Statement of Account submitted for filing shall be accompanied by a brief statement of the reason why it was not served on the copyright owner. A written acknowledgment of receipt and filing will be provided to the sender.

(B) The Copyright Office will not accept any royalty fees submitted with Annual Statements of Account under this § 202.19(f)(7)(iii).

(C) Neither the filing of an Annual Statement of Account in the Copyright Office, nor the failure to file such Annual Statement, shall have any effect other than that which may be attributed to it by a court of competent jurisdiction.

(D) No filing fee will be required in the case of Annual Statements of Account submitted to the Copyright Office under this § 201.19(f)(7)(iii). Upon request and payment of a fee of $4, a Certificate of Filing will be provided to the sender.

(g) *Documentation.* All compulsory licensees shall, for a period of at least three years from the date of service of an Annual Statement of Account, keep and retain in their possession all records

and documents necessary and appropriate to support fully the information set forth in such Annual Statement and in Monthly Statements served during the fiscal year covered by such Annual Statement.

(17 U.S.C. 115, 702, 708)

Dated: November 14, 1980.

David Ladd,

Register of Copyrights.

Approved:

Daniel J. Boorstin,

The Librarian of Congress.

[FR Doc. 80-37057 Filed 11-26-80; 8:45 am]

BILLING CODE 1410-03-M

ENVIRONMENTAL PROTECTION AGENCY

40 CFR Part 52

[A-6-FRL 1683-4]

Approval and Promulgation of State Implementation Plan; Approval of Conditionally Approved Elements in the Oklahoma Plan for Nonattainment Areas

AGENCY: Environmental Protection Agency (EPA).

ACTION: Final rulemaking.

SUMMARY: The purpose of this notice is to approve elements of the State Implementation Plan (SIP) revisions for Oklahoma, which were conditionally approved on February 13, 1980 (45 FR 9741). These revisions were submitted by the Governor on April 11, 1980, to fulfill the requirements of Part D of Title I of the Clean Air Act, as amended in 1977, with regard to nonattainment areas.

When originally submitted, certain portions of the SIP contained minor deficiencies which the State agreed to correct by a specified deadline. EPA received the required documentation according to schedule and has evaluated the State's submittal.

EFFECTIVE DATE: November 28, 1980.

FOR FURTHER INFORMATION CONTACT: Jerry Stubberfield, Chief, Implementation Plan Section, Air and Hazardous Materials Division, Environmental Protection Agency, Region 6, 1201 Elm Street, Dallas, Texas 75270, (214) 767-1518.

SUPPLEMENTAL INFORMATION:

Introduction

On July 31, 1979 (at 44 FR 44912), EPA published a notice of proposed rulemaking on revisions to the Oklahoma SIP. Under that notice the Agency discussed the SIP in detail and described the deficiencies of the SIP pursuant to Part D of the Act and the General Preamble, which was published in the April 4, 1979, issue of the Federal Register (44 FR 20372) and supplemented on July 2, 1979 (44 FR 385583), August 28, 1979 (44 FR 50371), September 17, 1979 (44 FR 5376), and November 23, 1979 (44 FR 67182).

In response to the proposed rulemaking notice dated July 31, 1979 (44 FR 44912), the State committed to correct the deficiencies and submit their corrections by April 30, 1980.

EPA took final action to conditionally approve certain elements of the Oklahoma plan February 13, 1980 (45 FR 9741).

A discussion of conditional approval and its practical effect appears in supplements to the General Preamble, 44 FR 38583 (July 2, 1979) and 44 FR 67182 (November 23, 1979).

Revisions to Regulations

The conditional approvals for the carbon monoxide portion of the State Implementation Plan (SIP) for the designated nonattainment area in Tulsa County required the State to define the term "significant impact" as used in Regulation No. 17 and that the definition be comparable to the term as defined in EPA's Interpretative Ruling of January 16, 1979. This definition was to be adopted and submitted to EPA by April 30, 1980. The State was also required to revise Regulation No. 17 to reflect that all subsequent designations will be submitted to EPA for concurrence and promulgation and to submit the revision to EPA by April 30, 1980.

The State submitted a modified definition of "significant impact" as used in Regulation No. 17 consistent with the definition of the term as defined in EPA's Interpretative Ruling of January 16, 1979. The State also revised Regulation No. 17 to reflect that all subsequent designations will be submitted to EPA for concurrence and promulgation. These items were received on April 16, 1980.

EPA has evaluated the State's submittal and has determined the conditions are fully met. Therefore, EPA is withdrawing conditional approval, and is fully approving this portion of the SIP.

The conditional approval for the review of new sources and modifications portion of the SIP required the State to revise Subsection 14.313 of the Oklahoma regulations to state that major modifications are subject to review and submit the revision to EPA by April 30, 1980. The State was also required to revise § 14.313(b) to reflect that all applicable emission limitations and standards under the Federal Clean Air Act are met and submit the revision to EPA by April 30, 1979. The State was further required to revise § 14.313(c)(i) to reflect that new minor sources were accounted for when determining the amount of growth allowance that would be used by a proposed new or modified source and submit the revision to EPA by April 30, 1980.

The State submitted a revised § 14.313 stating that major modifications are subject to review. The State also submitted a revised § 14.313(b) reflecting that all applicable emission limitations and standards under the Federal Clean Air Act are met. The State further submitted a revised § 14.313(c)(i) reflecting that new minor sources were to be accounted for when determining the amount of growth allowance that would be used by a proposed new or modified source. These items were received on April 16, 1980.

EPA has evaluated the State's submittal and has determined the conditions are fully met. Therefore, EPA is withdrawing conditional approval, and is fully approving this portion of the SIP.

The conditional approval for the total suspended particular (TSP) portion of the SIP for the designated nonattainment areas in Oklahoma, Tulsa and Mayes Counties required the State to revise their schedule to include specific dates indicating major elements in the overall TSP program. The detailed schedule was to contain dates by which the following major elements are to be completed; determination of results of additional monitoring, selection of potential measures for study, development of a study design for assessing the effectiveness of potential measures, determination of measures for actual implementation and, development of revisions to Regulation No 9. The State was to submit the revised schedule to EPA by March 1, 1980.

The State submitted a revised schedule with specific dates by which the following major elements of the overall program will be completed; determination of results of additional monitoring, selection of potential measures for study; development of study design for assessing the effectiveness of potential measures; determination of measures for actual implementation and; development of revisions to Regulation No. 9. This schedule was received on March 28, 1980.

EPA has evaluated the State's submittal and has determined the conditions are fully met. Therefore, EPA is withdrawing conditional approval,

and is fully approving this portion of the SIP.

The conditional approval for the ozone portion of the SIP for the designated nonattainment areas of Tulsa and Oklahoma Counties required the State to revise Subsection 15.50 in such a manner as to reflect that subsequent designations will be submitted to EPA for approval and promulgation, and submit the revised subsection to EPA by April 30, 1980. The State was also required to revise Subsection 15.53 to remove the exemption for wastewater separators receiving less than 100 gallons of volatile organic compounds (VOC) per day, and submit the revision to EPA by April 30, 1980. The State was further required to revise § 15.53 to remove the words "if necessary" in order to require control of vapors from hot wells and accumulators, and submit the revised subsection to EPA by April 30, 1980.

The State revised § 15.50 in such a manner as to reflect that subsequent designations will be submitted to EPA for approval and promulgation. The State revised § 15.53 removing the exemption for wastewater separators receiving less than 100 gallons of VOC per day. The State also revised § 15.53 removing the words "if necessary" in order to require control of vapors from hot wells and accumulators. These revisions were received on April 16, 1980.

EPA has evaluated the State's submittal and has determined the conditions are fully met. Therefore, EPA is withdrawing conditional approval, and is fully approving this portion of the SIP.

The State of Oklahoma has also modified the definition of "major source" contained in Oklahoma's revision to Regulation No. 3, which had previously received full EPA approval. This modification changes the method of calculating a source's potential to emit by requiring consideration of pollution controls used by the source. The modification was made to conform Oklahoma's regulation to the decision of the United States Court of Appeals for the District of Columbia Circuit in *Alabama Power Co.* v. *Costle*, 13 ERC 1993 (Dec. 14, 1979). EPA has reviewed this definition for consistency with the modified definitions of "major source" and "potential to emit" that EPA promulgated in response to this opinion. See 45 FR 52676 (August 7, 1980). EPA has determined that the State's definition is consistent with EPA's definitions, and is fully approving this additional revision to the SIP. EPA has also determined that it has "good cause" within the meaning of Section 4(b) of the Administrative Procedure Act, 5 U.S.C. 553(b), to approve this revision without first providing notice and opportunity to comment. EPA has already provided extensive opportunity to comment on the issues raised by this change in the definition of major source in its own rulemaking to modify this definition. Oklahoma also provided opportunity to comment on this specific revision to Regulation 3 prior to submitting the revision to EPA for approval. Moreover, additional comment would serve no practical purpose because the Oklahoma's revision conforms to the change to the definition of "major source" ordered by the District of Columbia Circuit in its *Alabama Power* opinion.

Public Comments

The public was given the opportunity to comment on the substance and schedules of the conditioned items in the proposed rulemaking of July 31, 1979 (44 FR 44912). These comments were addressed in the final rulemaking of February 13, 1980 (45 FR 9736).

EPA finds that good cause exists for making this rule immediately effective. In the notice of final rulemaking concerning the Oklahoma SIP (45 9733; February 13, 1980), EPA imposed certain conditions which the State had to meet before full approval could be promulgated. The State has now met these conditions.

Under Executive Order 12044, EPA is required to judge whether a regulation is "significant" and therefore subject to the procedural requirements of the Order or whether it may follow other specialized development procedures. EPA labels these other regulations "specialized." I have reviewed this and determined that it is a specialized regulation not subject to the requirements of Executive Order 12044.

This notice of final rulemaking is issued under the authority of Section 110 of the Clean Air Act, as amended.

Dated: November 4, 1980.

Douglas M. Costle,
Administrator.

Part 52 of Chapter 1, Title 40 of the Code of Federal Regulations is amended as follows:

Subpart LL—Oklahoma

1. In § 52.1920, paragraph (c) is amended by adding subparagraphs (15) and (16) as follows:

§ 52.1920 Identification of plan.

* * * * *

(c) * * *

(15) A revised schedule including specific dates of the overall TSP program was submitted by the State on March 28, 1980.

(16) Revisions to Regulation No. 17, Regulation No. 14 § 14.313, Regulation No. § 14.313(b), Regulation No. 14 § 14.313(c)(i), Regulation No. 15 § 15.50, Regulation No. 15 § 15.53, and Regulation No. 3 (Part D requirements) were submitted by the Governor on April 11, 1980.

§ 52.1923 [Revoked and Reserved]

2. Section 52.1923 is revoked and reserved.

§ 52.1924 [Revoked and Reserved]

3. Section 52.1924 is revoked and reserved.

§ 52.1930 [Revoked and Reserved]

4. Section 52.1930 is revoked and reserved.

§ 52.1932 [Amended]

5. Section 52.1932 is revised by revoking paragraph (b).

[FR Doc. 80-37085 Filed 11-26-80; 8:45 am]
BILLING CODE 6560-38-M

---

40 CFR Part 52

[A-5-FRL 1676-1]

Approval and Promulgation of Ohio Implementation Plan

AGENCY: U.S. Environmental Protection Agency.

ACTION: Final rulemaking.

SUMMARY: This rulemaking approves revisions to the Emergency Episode Procedures in the State Implementation Plan (SIP) for the State of Ohio. USEPA proposed approval and solicited public comments on the revisions to Rules 3745-25-01 through 3745-24-04 as part of the Federally approved Ohio SIP on May 23, 1980 (45 FR 34917). No public comments were received.

EFFECTIVE DATE: This final rulemaking becomes effective on December 29, 1980.

ADDRESSES: Copies of the SIP revision and USEPA's evaluation of the revision are available for inspection at the following addresses:

Air Programs Branch, U.S. Environmental Protection Agency, 230 South Dearborn Street, Chicago, Illinois 60604;

Public Information Reference Unit, Room 2922, U.S. Environmental Protection Agency, 401 M Street, S.W., Washington, D.C. 20460;

The Office of the Federal Register, 1100 L Street, N.W., Room 8401, Washington, D.C. 20460.

FOR FURTHER INFORMATION CONTACT: Delores Sieja, Air Programs Branch, Region V, U.S. Environmental Protection Agency, 230 South Dearborn Street, Chicago, Illinois 60604, (312) 886-6053.

SUPPLEMENTAL INFORMATION: On January 31, 1972, the Governor of Ohio submitted its SIP to the Environmental Protection Agency for approval pursuant to Section 110 of the Clean Air Act. This submission included, among other things, procedures required by Section 110(a)(2)(F)(v) of the Clean Air Act to address ambient air pollution emergency episodes. On April 15, 1974, the United States Environmental Protection Agency (USEPA) completed rulemaking on the emergency episode procedures by approving Ohio Rules AP-11-01 through AP-11-04 as part of the Federally approved Ohio SIP (39 FR 13539).

An emergency episode plan must include, among other things, (1) a contingency plan which will prevent ambient pollutant concentrations from reaching levels which could cause significant harm to the health of persons; (2) specifications for two or more stages of episode criteria; and (3) provisions for public announcements whenever there is an episode. The complete requirements for an emergency episode plan are outlined in 40 CFR 51.16.

On May 8, 1979, the Ohio EPA submitted revisions of Rules 3745-25-01 through 3745-25-04, previously codified as Rules AP-11-01 through AP-11-04, which comprise Ohio EPA's Emergency Episode Procedures. The major amendments to the existing rules are:

Rule 3745-25-01, Air Pollution Emergency

The reference in this rule to "Air Pollutants" was changed to "Air Contaminants."

Rule 3745-25-02, Episode Criteria

(a) The definition of "Air Pollution Forecast" for photochemical oxidants was modified. The new definition is: "An internal watch by the Ohio EPA shall be actuated by a National Weather Service advisory that an Atmospheric Stagnation Advisory is in effect or the equivalent local forecast of stagnant atmospheric condition. The air pollution forecast for photochemical oxidants shall take into consideration, but not be limited to, ambient temperatures, surface winds, and ultraviolet solar radiation levels."

(b) Based on a study of potential health effects of ozone and photochemical oxidants, the Ohio EPA has changed the alert level for photochemical oxidants from 0.1 ppm to 0.2 ppm.

(c) The condition that an episode may be completely eliminated when no episode stage criteria continue to exist was added to the termination clause for all pollutants.

Rule 3745-25-03, Emission Control Action Programs—Tables 1 to 5

Table 4 was modified to reflect revised emission reduction objectives for hydrocarbons. Sources must reduce hydrocarbon emissions during periods of alerts, warnings, and emergencies for each industrial process. The degree of reduction is related to the episode level and ranges from voluntary reduction, reduction considering reasonable economic hardships, and reduction without causing injury to persons or damage to equipment, respectively.

Rule 3745-25-04, Emergency Orders

Provisions were added to this rule to encourage less automobile use during "Alerts", "Warnings", and "Emergencies". To encourage less automobile usage, the public will be informed of the severity of the levels through the communications network.

USEPA reviewed these revisions to Rules 3745-25-01 through 3745-25-04 and determined that they satisfy the statutory and regulatory requirements of the Clean Air Act. Therefore, on May 23, 1980 (45 FR 34917), USEPA proposed approval of the revisions to Rules 3745-25-01 through 3745-25-04 as part of the federally approved Ohio SIP. Interested parties were given until June 23, 1980 to submit written comments. No comments were received. Consequently, the USEPA takes final action today to approve this revision to the Ohio SIP.

Under Section 307(b)(1) of the Clean Air Act, judicial review of this final action is available *only* by the filing of a petition for review in the United States Court of Appeals for the appropriate circuit within 60 days of (date of publication). Under Section 307(b)(2) of the Clean Air Act, the requirements which are the subject of today's notice may not be challenged later in civil or criminal proceedings brought by EPA to enforce these requirements.

Under Executive Order 12044 EPA is required to judge whether a regulation is "significant" and therefore subject to the procedural requirements of the Order or whether it may follow other specialized development procedures. EPA labels these other regulations "specialized." The Administrator has reviewed this regulation and determined that it is a specialized regulation.

After review of all relevant materials, the Administrator has determined that the revision meets the requirements of section 110(a)(3) of the Clean Air Act and USEPA regulations in 40 CFR Part 51.6. The revision is legally enforceable, will not interfere with attainment or maintenance of the NAAQS and has been subjected to reasonable notice and public hearing. Accordingly, the revision is approved.

This Final Rulemaking is issued under the authority of section 110 of the Clean Air Act as amended (42 U.S.C. 7410).

Dated: November 19, 1980.

Douglas Costle,

Administrator.

Note.—Incorporation by reference of the State Implementation Plan for the State of Ohio was approved by the Director of the Federal Register on July 1, 1980.

Title 40 of the Code of Regulations, Chapter 1, Part 52, is amended as follows:

1. Section 52.1870(c) is amended by adding a new paragraph to read as follows:

§ 52.1870 Identification of Plan.

* * * * *

(c) * * *

(23) On May 8, 1979, Ohio submitted revisions to regulations 3745-25-01 through 3745-25-04 (previously codified as AP-11-01 through AP-11-04) containing emergency episode procedures.

[FR Doc. 80-37104 Filed 11-28-80; 8:45 am]

BILLING CODE 6560-26-M

---

40 CFR Part 120

[WH-FRL 1680-8]

Water Quality Standards; Navigable Waters of the State of Ohio

AGENCY: Environmental Protection Agency.

ACTION: Final rule.

SUMMARY: The Environmental Protection Agency (EPA) is promulgating a final rule establishing criteria, a new beneficial use designation and other provisions which replace portions of the Ohio water quality standards disapproved by the EPA on August 9, 1978. In addition, the preamble to the rule describes the main features of EPA policy relating water quality standards and NPDES permit effluent limitations. The rule does not apply to the mainstream of the Ohio River, the Lower Cuyahoga River (navigation channel) or the Mahoning River and its tributaries in Ohio.

The major features of the rule are establishment of 5 mg/l as the instantaneous minimum dissolved oxygen criterion for the Warmwater Habitat use designation, establishment

of a Modified Warmwater Habitat use designation containing an instantaneous minimum dissolved oxygen criterion of 5 mg/l for 16 hours of any 24 hour period, and not less than 4 mg/l at any time; and denial of the State of Ohio's application of the Limited Warmwater Habitat use designation to specific stream segments because of inadequate justification that the Warmwater Habitat Use is not attainable in those segments. The Modified Warmwater Habitat use designation applies (with certain exceptions) to surface water in place of the State of Ohio's adopted Warmwater Habitat use designations, until additional studies determine whether or not the Federal Warmwater Habitat use designation (instantaneous minimum dissolved oxygen criterion of 5 mg/l) is attainable for each stream segment. If attainable, the waters must be upgraded to Warmwater Habitat.

EPA is withdrawing its disapproval of Ohio's cyanide Criterion for Warmwater Habitat use designation.

DATES: This rule becomes effective December 29, 1980.

FOR FURTHER INFORMATION CONTACT: William Benjey, EPA, Region V, 230 South Dearborn Street, Chicago, Illinois 60604 (312–353–2172).

SUPPLEMENTARY INFORMATION: Section 303(c) of the Clean Water Act (33 U.S.C. 1313(c)) provides that each State must review its water quality standards and adopt appropriate revisions at least every three years. That section also requires that EPA determine whether such revisions are consistent with the requirements of the Act. Where State provisions are not consistent with the Act and the State, after notification of such inconsistencies, does not make necessary revisions, EPA must undertake rulemaking proceedings to promulgate necessary water quality standards.

Background

On February 14, 1978, the Ohio Environmental Protection Agency ("OEPA") adopted revisions to the State water quality standards and submitted these revisions, with supporting documentation, for review by the Regional Administrator, Region V, of the EPA. On May 17, 1978, the Regional Administrator notified the Governor of Ohio that these revised standards were inconsistent with the Clean Water Act and advised the Governor that EPA would be required to promulgate Federal standards if necessary revisions were not made by the State. Although the State did submit clarifications of certain provisions, necessary revisions were not made by Ohio, and, on August 9, 1978, the Regional Administrator approved portions of the State standards but determined that other major portions of the standards were inconsistent with the Act. On July 6, 1979, EPA proposed water quality standards for the State to replace provisions which had not been approved. EPA today completes this rulemaking action by promulgating final water quality standards for Ohio.

Water Quality Standards Under the Clean Water Act

Section 101(a) of the Clean Water Act establishes as a national goal the achievement "wherever attainable" of water quality, which provides for the protection and propagation of fish, shellfish and wildlife and provides for the recreation in and on the water." Water quality standards, established pursuant to section 303, are a basic mechanism for achieving this goal.

A water quality standard basically consists of two parts: (1) a "designated use" for which the water body is to be protected (such as "agricultural," "recreational" or "fish and wildlife") and (2) "criteria" which are numerical or qualitative pollutant concentration limits for pollutants or pollutant parameters which are adequate to preserve or achieve the designated use. Although designated uses are established based on consideration of a range of environmental, technological, social and economic factors, criteria values are purely scientific judgments of the levels which will allow a use to be attained.

EPA water quality standards regulations are codified at 40 CFR 35.1550. Under these regulations, States must establish designated uses consistent with the 1983 goal where these uses are attainable and, in all cases, must maintain existing uses. "Downgrading," the modification of designated uses to establish a narrower range of uses, is allowed only where the designated use is unattainable because: (1) of natural background conditions; (2) irretrievable man-induced conditions, or (3) achievement of the designated use would require application of effluent limitations for existing sources more stringent than the technology-based requirements of section 301(b)(2) (A) and (B) and impositions of these limitations would result in substantial and widespread social and economic impact. States are required to submit adequate justification in support of any downgrade of designated uses. Guidance on application of these provisions is contained in Chapter 5 of *Guidelines for State and Areawide Water Quality Management Program Development.*

Relationship of Standards to Effluent Limitations

In order to ensure attainment of a water quality standard, it may be necessary to translate that standard (whether State adopted or Federally promulgated) into the effluent limitations applicable to individual point source dischargers. There has been some confusion on how the process functions, particularly in relationship to reissuance of National Pollutant Discharge Elimination System (NPDES) permits and the review of the adequacy of effluent limitations for Advanced Wastewater Treatment and Advanced Secondary Treatment (AWT/AST) municipal wastewater treatment plants in EPA's Municipal Construction Grants Program.

The procedure generally followed by EPA to establish specific effluent limitations, given a water quality use designation and associated criteria, involves a number of steps. The first of these is completion of a water quality survey and determination of the allowable pollutant loading to a defined uniform portion of a stream (stream segment) by mathematical modeling. The load which will allow water quality standards to be attained is allocated among dischargers on a stream segment (waste load allocation or WLA). These allocated loads will form the basis of specific NPDES permit discharge limitations if minimum technology-based limitations will not insure compliance with the standards. Stream segments which require effluent limitations more stringent than the minimum technology based effluent limitations in order to meet water quality standards are water quality limited. If the minimum technology based effluent limitations are more stringent than the calculated WLA limitations, the minimum required technology-based limitations are placed in the permit and the stream segment is effluent limited.

As discussed above, water quality standards on which effluent limitations may be based are subject to review for "attainability." There are several events which may initiate the above process, including NPDES permit expiration and reissuance, a new source permit application, or a review of advanced wastewater or advanced secondary treatment (AWT/AST) needs justification in the Municipal Construction Grants Program. Revisions to water quality standards during the term of a permit may cause the evaluation of permit effluent limitations prior to their reissuance. Evaluation of the adequacy of effluent limitations prior to permit reissuance may result in

a determination that the limitations remain adequate or that the effluent limitations require change or further detailed evaluation. Water quality modeling associated with WLAs is also used in determining the attainability of different water quality standards for specific stream segments.

Activities by each State under the above process are ongoing and are specified in each annual State-EPA Agreement. EPA provides financial assistance for portions of the process through program grants (under section 106, 205(g) and 208 of the Act).

Summary of Disapproved Standards

In its disapproval of the Ohio standards, the EPA identified a number of basic problems with the State's water quality provisions. First, the State regulations defined a Warmwater Habitat Use classification applicable to stream segments which were intended to support a balanced, healthy community of warmwater aquatic species. These regulations specified supporting criteria for this use classification: the criteria value for dissolved oxygen was not less than 5.0 mg/l for 16 hours of any 24-hour period and not less than 4 mg/l at any time; the criteria for cyanide was 0.025 mg/l measured as total cyanide. EPA concluded that these two criteria were not adequate to support the designated use and advised the State that more stringent criteria values were necessary.

Second, the State had created a Limited Warmwater Use classification which, in effect, operated as a variance classification for waters which will not achieve one or more of the Warmwater Habitat Use criteria because of the discharge of pollutants by dischargers or because of background environmental conditions. The State placed 111 stream segments in this new classification.

EPA recognized that the Limited Warmwater Habitat Use designation was an appropriate classification for stream segments for which the warmwater use habitat is not "attainable." However, such a reclassification constitutes a "downgrading" as specified in EPA regulations, and the Agency concluded the State had not submitted sufficient justification to warrant the downgrading of the specified stream segments which the State had placed in this classification.

Third, the State had created a Seasonal Warmwater Habitat use classification applicable to streams with a "seven consecutive day, once in ten year flow" (7Q10) of 1.0 cfs or less. The Region concluded that a low flow classification was appropriate but that the level set by the State to define low flow segments was too high.

Finally, EPA identified a number of other problems including provisions relating to "mixing zones" and the protocols for monitoring pollutant concentrations.

Summary of EPA Proposed Regulations

Following the State's refusal to modify its water quality standards, EPA published a proposed rule to establish necessary water quality standards for Ohio. This proposal did not apply to the mainstem of the Ohio River, the Lower Cuyahoga River (navigation channel) or the Mahoning River and its tributaries in Ohio (44 FR 39468 July 6, 1979). As explained in detail in the preamble to the proposal, the rule would have:

(1) Established a minimum dissolved oxygen criterion of 5.0 mg/l for the Warmwater Habitat Use designation,

(2) Established a total cyanide criterion of 5 μg/l for the Warmwater Habitat Use designation,

(3) Placed 111 stream segments in the Warmwater Habitat Use designation which the State had "downgraded" to the Limited Warmwater Habitat Use designation,

(4) Revised certain provisions relating to mixing zones and low flow exceptions, and

(5) Amended certain monitoring protocols adopted by the State.

Public comments on the proposal were received through October 19, 1979, and three public hearings were held in Ohio during the comment period.

Rationale for EPA's Final Regulation

EPA has made a number of changes from its proposed regulation. This is prompted in part by revisions to the Agency's policy for review of water quality standards.

At the time of the disapproval of the Ohio water quality standards, EPA had adopted the policy of "presumptive applicability" in reviewing the adequacy of the criteria component of a State standard. Under this policy, States were required to adopt criteria values from the EPA publication *Quality Criteria for Water* ("QCW" or the "Red Book") unless a State could justify less stringent criteria based on: natural background conditions, more recent scientific evidence or local, site-specific information. The QCW contained criteria values developed pursuant to section 304(a)(1) of the Act.

EPA is now, however, in the process of a comprehensive review of its water quality standards program and regulations and intends, by the end of the year, to propose revised regulations. During the completion of this review EPA must still review and act on State submissions of water quality standards in a manner consistent with the Act and existing regulations. Nonetheless, the Agency does not wish to take actions which may impose additional obligations where not clearly required by its existing regulations. Consequently, EPA in promulgating this rule: (1) will not employ the policy of "presumptive applicability" and will determine necessary criteria on a case-by-case basis after assessment of all available information, (2) will require that existing water quality be maintained, (3) will require justification as specified in Agency regulations for any "downgrading" of established designated uses, and (4) will not "upgrade" existing uses or establish more stringent criteria than those previously approved by the Agency in the absence of specific information that the new standard is attainable.

Consistent with this approach, EPA is adopting a final regulation which will preserve existing water quality in the State without imposing greater obligations on point and non-point sources than those previously required by Ohio. This involves three main elements. First, EPA continues to believe that a dissolved oxygen criterion of 5.0 mg/l minimum is necessary to adequately support a warmwater habitat and is including that value as the dissolved oxygen criterion for the Warmwater Habitat use classification. However, EPA at this time is only placing in this classification those segments which the data now indicate are currently achieving this level.

Second, EPA is denying all "downgradings" of stream segments to the Limited Warmwater Habitat use classification. The Agency believes that, even in this period of review of water quality standards policy, the State must bear the full burden of justifying revisions of previously approved standards.

Finally, all other stream segments previously classified as warmwater habitats, including those which the State attempted to downgrade to the Limited Warmwater Habitat use classification, are to be placed in a new "Modified Warmwater Habitat use classification." This new classification contains criteria which are identical to those which were included in the State's previous Warmwater Habitat classification. Thus, dischargers will be subject to the same requirements which the State had previously established.

Placement of segments in this new classification may be temporary. EPA intends to work with the State to develop information necessary to

determine whether individual stream segments can "attain" the full warmwater habitat use. Thus, where the full use can be achieved despite background environmental conditions and is attainable by application of minimum technology-based requirements specified in section 301(b)(2) (A) and (B) of the Clean Water Act or where the economic impact of additional requirements is not significant, the segments will be placed in the Warmwater Habitat use classification. EPA intends to consult with the State to develop a schedule for review of individual stream segments which will be contained in a State/EPA Agreement.

Contents of Final Rule

The following is a discussion of the major provisions of the final rule promulgated today.

Establishment of Dissolved Oxygen Criterion and Designation of Stream Segments in the Warmwater Habitat Use Classification

EPA is establishing a dissolved oxygen criterion for the Warmwater Habitat Use classification of an instantaneous minimum of 5.0 mg/l. This value is identified in *Quality Criteria for Water* as the appropriate dissolved oxygen level for support of a healthy and balanced warmwater fishery population. Although EPA no longer applies the policy of "presumptive applicability" the Agency must still assess the adequacy of standards. Included in this assessment is a review of the adequacy of pollutant criteria to maintain or achieve a designated use. After review of comments submitted and available scientific information, the Agency has concluded that the 5.0 mg/l dissolved oxygen criterion is necessary in Ohio to support the Warmwater Habitat Use Classification.

The dissolved oxygen criterion adopted by Ohio was a concentration not less than 5 mg/l for 16 hours of any 24 hour period with a minimum of not less than 4 mg/l at any time. Ohio based this criterion largely upon the fact that warmwater fish species are present in Ohio streams in which the diurnal ranges of dissolved oxygen concentrations exhibit minimum values less than 5 mg/l. However, the presence of warmwater fish species does not indicate that dissolved oxygen concentrations less than 5 mg/l adequately protect the species during their sensitive embryo and hatching stages or maintain healthy populations that grow and spawn normally.

The dissolved oxygen criterion in the QCW is based on current scientific information on the environmental requirements necessary to maintain balanced, healthy and reproducing populations. While EPA recognizes that fish can survive at dissolved oxygen concentrations less than 5 mg/l, maintenance of well-rounded fish populations characterized by an abundance of warmwater game fish (i.e., largemouth bass, bluegills, etc.) has been observed to occur consistently only when dissolved oxygen concentrations are 5 mg/l or greater. Furthermore, one study reported in the QCW has shown that fish growth and the viability of juveniles are regulated by daily minimum dissolved oxygen concentrations rather than daily averages. A fuller discussion of the basis for the dissolved oxygen criterion is contained in the Response to Comments below.

EPA is, at this time, only designating as warmwater habitats 17 stream segments which data indicate are currently attaining a dissolved oxygen level of 5.0 mg/l minimum. See (Section 120.45(d) of the regulation). These segments were identified as currently achieving a minimum dissolved oxygen concentration of 5 mg/l based on Ohio's 1980 Water Quality inventory required by section 305(b) of the Act. Only stream segments where a National Ambient Water Quality Monitoring Station having at least a one year period were used to define these segments. EPA delineated the segment boundaries by measuring downstream from a monitoring station to the first discharge or tributary streams. Segments were not extended past intervening discharges without monitoring data from downstream stations. Consequently EPA believes that this list constitutes a conservative estimate based on the State's own data of those segments actually achieving a minimum dissolved oxygen level of 5.0 mg/l.

EPA has also identified a list of 45 additional stream segments which appear to achieve the minimum dissolved oxygen criterion. However, because the available data base did not cover a full year, EPA is not, at this time, designating these segments as Warmwater Habitats. EPA intends to include a requirement in the State/EPA agreement for early evaluation of the attainable uses of these segments.

Withdrawal of the Disapproval of the Cyanide Criterion

EPA proposed in its July 6, 1979, proposed Rulemaking to supersede Ohio's Warmwater Habitat total cyanide criterion of 0.025 mg/l with 0.005 mg/l, a concentration recommended in *Quality Criteria for Water* (QCW). However, EPA is today publishing a notice elsewhere in this Federal Register, that its new recommendations for cyanides in fresh water are a "free" cyanide of 3.5 μg/l as a 24-hour average, with concentrations not to exceed 5.2 μg/l at any time.

Although EPA still questions the adequacy of the existing Ohio criterion for cyanide, the Agency is withdrawing its disapproval of this portion of the Ohio standard. This action is being taken because the Agency has substantially changed its criterion for cyanide, and because the Agency's policy has traditionally allowed State consideration of new or changed criteria before any Federal action. EPA expects Ohio to review its cyanide criterion for all water uses during its next triennial water quality standards revision in light of EPA's revised criterion. Until a revised cyanide criterion is established by the State or EPA, Ohio's current criterion remains in effect.

Establishment of Modified Warmwater Habitat Use Classification and Designation of Specific Stream Segments

EPA establishes herein a Modified Warmwater Habitat Use classification as a new use classification in addition to those adopted by Ohio. The dissolved oxygen criterion for the Modified Warmwater Habitat is an instantaneous minimum of not less than 5 mg/1 for 16 hours of a 24 hour period and not less than 4 mg/1 at any time. This, and all other criteria, are the same as those contained in Ohio's Warmwater Habitat Use classification.

With the exception of the 17 stream segments listed in § 120.45(d) of todays rule, all stream segments previously classified as Warmwater Habitat streams are placed in the new Modified Warmwater Habitat use classification. This includes those segments which the State "downgraded" to the Limited Warmwater Habitat use classification. Since this new use classification has criteria identical to Ohio's Warmwater Habitat classification, this action will not affect the requirements previously applicable to point and nonpoint sources discharging into these segments.

This action does not constitute a determination that these stream segments cannot attain the Warmwater Habitat use classification. EPA will work with the State to examine environmental, economic and technological factors necessary to make that determination. These studies should be specified in the annual State-EPA Agreement.

EPA carefully reviewed the justifications submitted into the record

of this proceeding for downgrading the 111 segments listed in § 120.45(e) to limited warmwater habitat use from warmwater habitat use. EPA has concluded, however, that the State has not submitted sufficient justification to warrant the "downgrading." By placing these segments in the Modified Warmwater Habitat, they are now subject to the same standards applicable prior to their downgrading. The contents of the necessary justifications are more fully elucidated in the response to comments.

Modification of the Seasonal Warmwater Habitat Use Designation

EPA's promulgation today amends Ohio's Seasonal Warmwater Habitat use designation by limiting the low flow provision to streams which have a "seven consecutive day, once in ten year low flow (7Q10)" of 0.1 cfs or less. The only change to the proposed rule is the inclusion of a requirement for achieving the Modified Warmwater Habitat requirements rather than the warmwater habitat requirements, during periods when flow exceed the 7Q10 flow.

Modification of Mixing Zone Requirements

The mixing zone requirements adopted herein are substantially the same as those which were proposed. One clarification added requires a case-by-case justification for the application of a mixing zone to discharges in streams designated as Seasonal Warmwater Habitat.

Modification of Conditions for Exceptions

EPA has made two changes from its proposed rule. EPA proposed a rule that required the imposition of discharge limitations sufficiently stringent to meet water quality standards at the 7Q10 flow, prior to any flow reductions by State owned, operated or licensed water projects. EPA has deleted this provision. Ohio has legislation permitting the total diversion of certain waters for purposes of public water supply, and in such situations, the burden on existing dischargers to meet water quality standards based on "natural" flow may be excessive.

Also proposed were requirements for dredging and construction in waterways. Upon review of Corps of Engineer requirements which include extensive environmental evaluations, EPA has decided to withdraw this proposal. EPA therefore approves OAE 3745-1-10(A)(5).

Digest of Public Comments and EPA's Response

EPA received 100 submissions to the record on the proposed rule. A list of the individuals or organizations submitting these statements is attached to Appendix B. The concerns in these statements, grouped by subject, and the Agency's responses to major comments follow this rule in Appendix C. Additional responses to comments and a discussion of comments relating to individual stream segments are contained in the Administrative record of this rulemaking.

Specialized Regulation

Under Executive Order 12044, EPA is required to judge whether a regulation is "significant" and therefore subject to the procedural requirements of the Order applicable to "significant regulations" or whether it may follow other specialized development procedures. EPA labels these other regulations "specialized." I have reviewed this regulation and determined that it is a specialized regulation not subject to the procedural requirements of Executive Order 12044.

Availability of Record

The transcripts of the hearing referred to in this preamble as well as written comments received during the comment period are hereby made a part of the record of this rulemaking. The entire administrative record is available for public inspection and copying at the Environmental Protection Agency, Region V Office at the address noted above. The hearing transcript and other written comments are also available for inspection and copying at the Public Information Reference Unit, EPA Library, 401 M Street, SW, Washington, DC 20460, during the Agency's normal business hours of 8:00 a.m. to 4:30 p.m.

(Sec. 303(c) of the Clean Water Act, as amended (Pub. L. 92-500 (33 U.S.C. 1313(c)))

Dated: November 19, 1980.

Douglas M. Costle,

Administrator.

A new § 120.45 is hereby added to Part 120 of Title 40 of the Code of Federal Regulations and reads as follows:

§ 120.45 Ohio water quality standards.[1]

(a) Ohio Administrative Code, Section 3745-1-02 Definitions—the cited section does not include definitions for the terms "Act" or "Regional Administrator". The following definitions are to be used by the State of Ohio as if the definitions were incorporated in the above cited Code Section—(1) Act is the Clean Water Act, as amended (Pub. L. 92-500 (33 U.S.C. 1251 *et seq.*)), (2) Regional Administrator is the Administrator (or his designee) of Region V of the United States Environmental Protection Agency.

(b) Ohio Administrative Code, Section 3745-1-03 Analytical Methods—the cited section does not require compliance with EPA sample collection and sample preservation methods. The cited Ohio Administrative code section is null and void to the extent that it is inconsistent with the following: All methods of sample collection, preservation and analysis shall be in accord with those prescribed in 40 CFR Part 136, *Test Procedures for the Analysis of Pollutants.*

(c) Ohio Administrative Code Section 3745-1-06—Mixing Zones—Indicated paragraphs of the cited Ohio Administrative Code section are null and void to the extent that they are inconsistent with the provisions of this section—(1) The Director, following prior EPA approval in accordance with section 303(c) of the Clean Water Act, may waive the requirements of section (A)(1) (e), (f) and (g) of OAC 3745-1-6 and redefine the extent of a mixing zone whenever a discharger provides:

(i) Information defining the actual boundaries (where the water quality standards are met) of the mixing zone in question, and

(ii) Information and data proving no violation of sections (A)(1) (a), (b), and (c) and (d) of OAC 3745-2-06 by the mixing zone in question.

Note.—This paragraph supersedes OAC 3745-1-06(A)(2).

(2) The waters of the mixing zone shall not exceed at any time the 96 hour LC50 for any representative aquatic species, as determined by static bioassays for persistent toxicants and flow-through bioassays for non-persistant toxicants in accordance with methods described in "Methods of Acute Toxicity Tests of Fish, Macroinvertebrates, and Amphibians" (EPA Pubication 660/3-75-009). In addition, no conditions within the mixing zone shall exist which result in the bioconcentration or bioaccumulation of materials at levels which may be harmful to aquatic organisms or their consumers.

Note.—This paragraph supersedes OAC 3745-1-06(A)(4).

(3) OAC 3745-1-(A)(6) concerning mixing zones for seasonal warmwater habitat is null and void. Mixing zones

[1] References herein to the Ohio Water Quality Standards are to the Ohio Administrative Code Regulations 3745-1-01 *et seq*, Recodified January 31, 1977; Amended December 30, 1977; and effective February 14, 1978.

for Seasonal Warmwater Habitat will be established on a case-by-case basis as part of the justification of the application of the Seasonal Warmwater Habitat use designation.

(4) Thermal Mixing Zones—(i) A thermal mixing zone to permit dilution and cooling of a waste heat discharge shall be considered a region in which an organism's response to temperature is time-dependent. Exposure to temperature in a thermal mixing zone shall not cause an irreversible response which results in deleterious effects to the wildlife and aquatic life representative of the receiving waters.

Note.—This paragraph supersedes OAC 3745-1-06(B)(1).

(ii) Thermal mixing zone size limitations shall be established by the Director pursuant to OAC 3745-1-06(A) and § 120.45(c)(1), (2), (3) and(4)(i) on a case-by-case basis for all point source discharges subject to a NPDES permit.

Note.—This paragraph supersedes OAC 3745-1-06(B)(2).

(iii) OAC 3745-1-06(B)(3), (B)(6), (B)(7), and Table 1 are null and void.

(d) Ohio's Administrative Code Section 3745-1-07-Water Use Designations

(1) Warmwater Habitat.

(i) The dissolved oxygen water quality criterion in paragraph (A)(8) is null and void. A dissolved oxygen water quality criterion of an instantaneous minimum of not less than 5.0 mg/l is established.

(ii) The following stream segments are hereby designated as warmwater habitat:

(a) Astabula River (mile 5.5 to 1.6)
(b) Conneaut Creek (mile 6.4 to .45)
(c) Huron River (mile 1.6 to .81)
(d) Little Beaver Creek (mile 4.6 to mouth at Ohio River)
(e) Maumee River (mile 100.3 to 81.49)
(f) Auglaize River (mile 4.1 to 3.62)
(g) Muskingum River (mile 107.3 to 105.88)
(h) Licking River (mile 25.6 to 4.33)
(i) Mohican River (mile 16.6 to mouth at Walhonding River)
(j) Tuscarawas River (mile 21.3 to 11.2)
(k) Walhonding River (mile 14.7 to 7.32)
(l) Ohio Brush Creek (mile 13.1 to 11.5)
(m) Racoon Creek (mile 29.6 to mouth at Licking River)
(n) Big Darby Creek (mile 13.2 to mouth at Scioto River)
(o) Olentangy River (mile 11.5 to 2.08)
(p) Vermilion River (mile 4.5 to 1.0)
(q) Great Miami River (mile 20.8 to 20.11)

Note.—River miles shown are measured from the river mouth upstream.

(2) Modified Warmwater Habitat—A use designation is established with the following definition: Modified Warmwater Habitat—Water capable of supporting Warmwater Habitat uses, and meeting all water quality standards criteria as defined by paragraph (A) of OAC 3745-1-07 as modified by these rules except that the dissolved oxygen criterion is not less than an instantaneous minimum of 5 mg/l for 16 hours of any 24 hour period, and not less than 4 mg/l for any 8 hours for an 24 hours period. The instantaneous minimum shall not be less than 4 mg/l. Permanent application of the Modified Warmwater Habitat use designation shall be justified in each case and is subject to approval under EPA's water quality standards regulations. EPA applies the Modified Warmwater Habitat use designation to all water classified as Warmwater Habitat or Limited Warmwater Habitat by Ohio. The waters shall be upgraded to Warmwater Habitat as defined herein, on a case-by-case basis, if further studies determine that warmwater Habitat is attainable.

(3) Seasonal Warmwater Habitat—The definition adopted by Ohio is null and void. EPA establishes the following definition: Seasonal Warmwater Habitat—Waters capable of supporting the propagation and habitation of aquatic organisms on a seasonal basis defined on a case-by-case basis. These waters have low flows as defined by the minimum 7 consecutive day low flow with a recurrence frequency of once in ten years of 0.1 cubic feet per second or less; have more than 50 percent of their total flow, when such flow rates occur, composed of wastewater effluents; and conditions to support a Modified Warmwater designation cannot be attained during all seasons. Application of this use designation shall require definition of the time period to which it applies, and be on a case-by-case basis subject to approval under EPA's water quality standards regulations. Such water shall be classified for the Modified Warmwater Habitat use designation for the balance of time.

Note.—This paragraph supersedes OAC 3745-1-07(D).

(e) Ohio Administrative Code Section 3745-1-03 Classification of Waters—classification of the named waters in this subsection for Limited Warmwater Habitat in lieu of Warmwater Habitat in Paragraph (C) of the above cited section is null and void. The beneficial use designation of these waters is Modified Warmwater Habitat until additional case-by-case studies by Ohio determine if lesser use designations are justified.

Abrams Creek—Middleburg Hts. STP to Grayton Road (Cuyahoga Co.).
Abrams Creek—Middleburg Hts. STP to Grayton Road (Cuyahoga Co.).
Auglaize River—Hamilton St. in Wapakoneta to Glynwood Road (Auglaize Co.).
Big Creek—Ford Motor Co. to confluence with Cuyahoga River (Cuyahoga Co.).
Black River—Elyria STP to confluence with Lake Erie (Lorain Co.).
Blanchard River—Findlay STP to Hancock C.R. 128
Brandywine Creek—Hudson Village STP to Macedonia STP (Summit Co.).
Brandywine Creek—Macedonia No. 15 to confluence with Cuyahoga River (Summit Co.).
Brandywine Creek—Macedonia No. 15 to Brandywine Gorge (Summit Co.).
Cementary Creek—Jefferson STP to confluence with Mill Creek (Ashtabula Co.).
Chippewa Creek—Medina County Sewer District No. 1 to confluence with Little Chippewa (Wayne Co.).
Chippewa Creek—confluence with Little Chippewa to confluence with Tuscarawas River (Summit Co.).
Cuyahoga River—Monroe Falls Dam Pool (Summit Co.).
Cuyahoga River—Akron STP to Penninsula (Summit Co.).
Duck Creek and tributary—Headwaters to confluence with Little Miami River (Hamilton Co.).
East Branch Nimishillen Creek—Louisville to confluence with Middle Branch (Stark Co.).
East Branch Nimishillen Creek—Confluence with the Middle Branch to confluence with Nimishillen Creek.
East Branch Portage River—Fostoria STP to Cygnet Road (Wood Co.).
East Branch Rocky River—Berea STP to confluence with West Branch (Cuyahoga Co.).
Fields Brook—Cook Rd. to confluence with Ashtabula River (Ashtabula Co.).
Great Miami River—from Dayton WWTP to 2nd St. in Franklin (Warren Co.).
Hurford Run—Headwaters to confluence with Nimishillen Creek (Stark Co.).
Huron River—Rt. 6 Bridge in Huron to confluence with Lake Erie (Erie Co.).
Jacob Creek—Willard STP to Holiday Lake (Huron Co.).
Jerome Fork—Confluence with Lang Creek to Old U.S. 30 in Jeromesville (Ashland Co.).
Killbuck Creek—Wooster STP to confluence with Little Killbuck (Wayne Co.).
Killbuck Creek—Wooster STP to Wayne—Holmes County Line (Wayne Co.).
Lang Creek—Ashland STP to confluence with Jerome Fork (Ashland Co.).
Little Chippewa Creek—Orrville STP to confluence with Chippewa Creek (Wayne Co.).
Maumee River—I-75 to confluence with Maumee Bay (Lucas Co.).
Middle Fork Little Beaver Creek—Salem STP to Mahoning—Columbiana County Line near Washingtonville (Mahoning Co.).
Mill Creek—Granger Rd. to confluence Cuyahoga River (Cuyahoga Co.).
Mill Creek—I-275 to Spring Grove Avenue (Hamilton Co.).

Mill Creek, Ross Run, West Fork and tributary—Spring Grove Avenue to confluence with Ohio River (Hamilton Co.).
Mud Brook—Confluence with Powers Brook Wyaga lake (Summit Co.).
Muskingum River—Confluence of Walhonding and Tuscarawas Rivers to Rt. 83 Bridge (Coshocton Co.).
Nimishillen Creek—Canton STP to confluence with Sandy Creek (Stark Co.).
North Branch Portage River—confluence with Poe Ditch to confluence with Middle Branch in Pemberville (Wood Co.).
Ottawa River—Standard Oil Lima Refinery outfall to Allen County Line (Allen Co.).
Ottawa River—Standard Oil Lima Refinery outfall to Allentown (Allen Co.).
Ottawa River—Lover's Lane Control Structure near Bellfontaine Avenue in Lima to Neff Road (Allen Co.).
Ottawa River—Cherry Street to Summit Street (Lucas Co.).
Paramour Creek—Crestline STP to confluence with Allen Run (Crawford Co.).
Plum Creek—Oberlin STP to confluence with West Branch Black River (Lorain Co.).
Pond Brook—Aurora Shores STP to confluence with Tinkers Creek (Summit Co.).
Powers Brook—Hudson No. 6 to confluence with Mud Brook (Summit Co.).
Rattlesnake Creek—Norwalk STP to confluence with Huron River (Huron Co.).
River Styx—Wadsworth STP to confluence with Chippewa Creek (Wayne Co.).
Rocky Fort—Mansfield STP to Applegate Road (Richard Co.).
Rocky River—Lakewood STP to confluence with Lake Erie (Cuyahoga Co.).
Sandusky River—Fremont STP to confluence with Muskelluge Creek (Sandusky Co.).
Sandusky River—Bucyrus STP to Mt. Zion Rd. (Crawford Co.).
Scioto River—Greenlawn Avenue Dam to confluence with Big Darby Creek (Pickaway Co.).
Skellinger Creek—New London STP to confluence with East Branch Vermilion (Huron Co.).
State Line Creek—from BFI & State line to confluence with North Fork (Lucas Co.).
Swan Creek—Detroit Avenue to confluence with Maumee River (Lucas Co.).
Tuscarawas River—Barberton STP to confluence with Chippewa Creek (Summit Co.).
Tuscarawas River—confluence with Chippewa Creek to Massillon STP (Stark Co.).
Tuscarawas River—from PPG to confluence with Sandy Creek (Stark Co.).
Tuscarawas River—River mile 5.0 to confluence with Muskingum River (Coshocton Co.).
Wahoo Ditch—Ravenna STP to confluence with Breakneck Creek (Portage Co.).

Note.—The above listing supersedes OAC 3745-1-08 (C)(1).

Big Run—New Nacco Mine No. 3 portal to confluence with Ohio River (Belmont Co.).
Boggs Fork and tributaries—Holloway to confluence with Stillwater Creek (Harrison Co.).
Brush Creek and tributaries—Headwaters to confluence with Muskingum River (Muskingum Co.).
Buffalo Creek and tributaries—Headwaters to confluence with Buffalo Fork (Noble Co.).
Buffalo Fork and tributaries—Headwaters to confluence.
Buffalo Creek—Headwaters to confluence with West Fork Duck Creek (Noble County).
Captina Creek—Confluence of North and South Forks to confluence with Ohio River (Belmont County).
Cat Run—New Nacco Mine No. 1 portal to confluence with Captina Creek (Belmont County).
Conotton Creek and tributaries—Headwaters to Jewett (Harrison County).
Crooked Creek and tributaries—Headwater to confluence with Wills Creek (Guernesy County).
Cushing Run and tributaries—Headwaters to confluence with Muskingum River (Washington County).
Duck Creek—Confluence of East and West Forks to confluence with Ohio River (Washington County).
East Fork Duck Creek and tributaries, except Pawpaw Creek—Headwaters to confluence with Duck Creek (Washington County).
Elk Fork and Puncheon Fork—Headwaters to S.R. 677 (Vinton County).
Federal Creek and all tributaries—Confluence with Sharps Fork to confluence with Hocking River (Athens County).
Hewett Fork and tributaries—Headwaters to confluence with Raccoon Creek (Vinton County).
Johnny Woods River—Headwaters to confluence with West Fork Duck Creek (Noble County)
Jonathan Creek and tributaries, including Turkey Run—Confluence with Turkey Run to confluence with Moxahala Creek (Muskingum County).
Kyger Creek and tributary—headwaters to confluence with Ohio River (Gallia County).
Leatherwood Creek and Shannon Run—Headwaters to Cambridge (Guernesy County).
Little McMahon Creek—Confluence with Chambers Run to confluence with McMahon Creek (Belmont County).
Little Raccoon Creek—T.R. 21 to C.R. 28 (Vinton County)
Little Raccoon Creek—Confluence with Sand Run to Confluence with Raccoon Creek (Gallia County)
Little Raccoon Creek Tributaries from Lake Alma to Jackson-Gallia County line—Headwaters to confluence with Little Raccoon Creek (Jackson County)
Little Short Creek and Coal Run—Headwaters to confluence with Short Creek (Jefferson County).
Little Stillwater Creek—Confluence with Plum Run to Dennison (Tuscarawas County).
McMahon Creek—Headwaters to confluence with Ohio River (Belmont County).
Mill Creek and tributaries—Headwaters to confluence with Walhonding River (Coshocton County).
Mill Fork and tributaries—Headwaters to confluence with Wakatomika Creek (Muskingum County).
Monday Creek, Little Monday Creek and Snow Creek—Headwaters to confluence with Hocking River (Athens County).
Moxahala Creek and tributaries—Headwaters to confluence with Muskingum River (Muskingum County).
North Fork Yellow Creek—Salineville to confluence with Yellow Creek (Jefferson County).
Opossum Creek and tributary—Headwaters to confluence with Ohio River (Monroe County).
Osburn Run—Headwaters to confluence with Ohio River (Lawrence County).
Piedmont reservoir tributaries—Headwaters to confluence with Piedmont Reservoir (Belmont County).
Pipe Creek—Headwaters to confluence with Ohio River (Belmont County).
Raccoon Creek, including West and East Branches—Headwaters to Tycoon Lake (Vinton County).
Raccoon Creek tributarties, except Elk Fork, from Lake Hope to Vinton-Gallia county line—Headwaters to confluence with Raccoon Creek (Vinton County).
Rush Creek—Headwaters to confluence with Little Rush Creek (Fairfield County).
Short Creek, Piney Fork and Middle Fork and tributaries—Headwaters to confluence with Ohio River (Jefferson County).
Stillwater Creek—Headwaters to confluence with Bushy Fork (Harrison County).
Sunday Creek and West Branch—Headwaters to confluence with Hocking River (Athens County).
Twomile Run—Benedict preparation plant to confluence with Raccoon Creek (Vinton County).
Wakatomika Creek—Frazeysburg to confluence with Muskingum River (Muskingum County).
Warren Run—Headwaters to confluence with West Duck Creek (Noble County).
West Fork Duck Creek—Headwaters to confluence with Duck Creek (Washington County).
Wheeling Creek—Headwaters to confluence with Ohio River (Belmont County).
White Eyes Creek and tributary—Headwaters to confluence with Wills Creek (Coshocton County).
Wills Creek—Cambridge to downstream Wills Creek Reservoir (Coshocton County).
Yellow Creek—Berghotz to confluence with Ohio River (Jefferson County).

Note.—The above listing supersedes OAC 3745-1-08(C)(2).

(f) Ohio Administrative Code 3745-1-09 Low Flow Streams is null and void. EPA establishes the following requirements.

(1) Low flow stream means that portion of a water course where the minimum seven consecutive day average flow that has a recurrence frequency of once in ten years (not attributable to discharge and other hydraulic alterations) is 0.1 cubic feet per second or less.

Note.—This paragraph supersedes OAC 3745-1-09(A)(1).

(2) Except as provided in paragraph (f)(4) of this section, water courses that

meet the requirements for low flow streams as established in paragraph (f)(1) of this section are required to meet the water quality criteria supportive of the Modified Warmwater Habitat use designation.

Note.—This paragraph supersedes OAC 3745-1-09(A)(2).

(3) High quality low-flow stream means that portion of a water-course where:

(i) Section 120.45(f)(1) of this rule is met.

(ii) Water quality criteria supportive of the use designation Warmwater Habitat or higher are met presently in the stream, and/or

(iii) A diverse aquatic community exists in the stream as determined by the Director.

Note.—This paragraph supersedes OAC 3745-1-09(B).

(4) Water courses determined to be of high quality under paragraph (f)(3) of this section shall be maintained at their present quality unless such waters are reclassified to another use designation through the water quality standards revision procedure of the Ohio continuing planning process. Mixing zone requirements as established in OAC 3745-1-06 shall not apply to such streams. Instead, ambient water quality shall be maintained at all points in the stream until a mixing zone is formally established by the Director through a process which includes a public hearing.

Note.—This paragraphs supersedes OAC 3745-1-09(C).

(g) Ohio Administrative Code 3745-1-10 Conditions for Exceptions.

(1) Paragraph (A)(2), (A)(4), (A)(6)(B) and (C) of OAC 3745-1-10 are null and void.

(2) The following provisions shall be applied by Ohio as if part of OAC 3745-1-10.

(i) All exceptions will apply only to the specific water quality criteria involved in each case and only for a reasonable period of time as determined by the Director. However, for the purpose of applying the low flow exception to water quality standards, a reasonable period of time is that period when the flow rate is less than the minimum seven consecutive day average flow with a recurrence frequency of once in ten years.

Note.—This paragraph supersedes OAC 3745-1-10-(B).

(ii) Existing best management practices, including those defined in statewide or areawide water quality management plans developed under section 208 of the Clean Water Act, shall be maintained in accordance with the provisions of the approved plan, during such exemption from water quality standards in order to minimize damage of the environment.

Note.—This paragraph supersedes OAC 3745-1-10-(C).

(g) Ohio Administrative Code 3745-1-11 Lake Erie Standards—

(1) The following paragraphs of the Ohio Administrative code section 3745-1-11 are null and void: (B)(1)(b), (B)(2)(a), (B)(2)(b), (B)(2)(C), (B)(2)(d), and Table 7d.

(1) The following provisions shall be applied by Ohio as if part of OAC 3745-1-11:

(i) The water of the mixing zone shall not exceed at any time the 96 hour LC50 for any representative aquatic species, as determined for existing scientific literature, or the 96 hour LC50 for any representative aquatic species, as determined by static bioassays for persistent toxicants and flow-through bioassays for non-persistent toxicants in accordance with methods described in "Methods of Acute Toxicity tests of Fish, Macroinvertebrates and Amphibians" (EPA publication 660/3-75-009). In addition, no conditions within the mixing zone shall exist which result in the bioconcentration or bioaccumulation of materials at levels which may be harmful to aquatic organisms or their consumers. Subject to paragraph (h)(2)(iii) of this section, a mixing zone shall not exceed 23 acres in area.

Note.—This paragraph supersedes OAC 3745-1-11(B)(1)(b).

(ii) A thermal mixing zone to permit dilution and cooling of a waste heat discharge, shall be considered a region in which organism response to temperature is time dependent. Exposure to temperature in a thermal mixing zone shall cause an irreversible response which results in deleterious effects to the wildlife and aquatic life representative of the receiving waters.

Note.—This paragraph supersedes OAC 3745-1-11(B)(2)(a).

(iii) Thermal mixing zone size limitations shall be established by the Director pursuant to OAC 3745-1-11(1) and paragraph (h)(2) (i) and (ii) of this section on a case-by-case basis for all thermal point source discharges subject to a NPDES permit. However, thermal mixing zone shall not exceed 23 acres in area, except that a large thermal mixing zone which will not adversely affect the uses of the receiving water may be demonstrated in accordance with section 316 of the Clean Water Act.

Note.—This paragraph supersedes OAC 3745-1-11(2)(b).

Appendix A—Submissions to the Hearing Record

The Ohio Environmental Protection Agency's (OEPA) 1979 Submittals:

—Document Number 1-1 OEPA letter to the USEPA on the Memorandum of Understanding and Ohio Water Quality Standards.

—Document Number 1-2 Memorandum of Understanding Between the OEPA and USEPA About Matters Concerning Water Quality Standards, Wasteload Allocations, and Variance Considerations.

—Document Number 1-3 Additional Technical Justifications of the OEPA Water Quality Standard for Dissolved Oxygen (DO).

—Document Number 1-4 Fish Survey of the Miami River near Dayton, Ohio.

—Document Number 1-5 The Fish Community of the Great Miami River near Dayton, Ohio.

—Document Number 1-6 Influence of Dissolved Oxygen and Carbon Dioxide on Swimming Performance on Largemouth Bass and Coho Salmon.

—Document Number 1-7 Avoidance Reactions of Salmonid and Centrarchid Fishes in Low Oxygen Concentrations.

—Document Number 1-8 Dissolved Oxygen Requirements of Three Species of Fish.

—Document Number 1-9 Respiration of Fishes with Special Emphasis on Standard Oxygen Consumption.

—Document Number 1-10 The Effect of the Greenwich Sewage Lagoon Discharge Upon Two Small Receiving Streams in Northwest Ohio.

—Document Number 1-11 OEPA Inter-Office Communication on Dissolved Oxygen Standards.

—Document Number 1-12 Effects of Reduced Oxygen on the Embryos and Larvae of Lake Trout (Salvelinus namaycush) and Largemouth Bass (Micropterus Salmonides).

—Document Number 1-13 USEPA Quarterly Report (October-December 1978) on the Effects of Lowered DO Concentrations Compared.

—Document Number 1-14 Spawning Success of the Black Crappie, Pomoxis Nigromaculatus, at Reduced Dissolved Oxygen Concentrations.

—Document Number 1-15 Dissolved Oxygen, Temperature, Survival of Young at Fish Spawning Sites.

—Document Number 1-16 The Restricted Movement of Fish Populations.

Document Number 1-17 Evidence for the Concepts of Home Range and Territory in Stream Fishes.

Document Number 1-18 Influence of Oxygen Concentration on the Growth of Juvenile Largemouth Bass.

Document Number 1-19 Effect of Long-term Reduction and Diel Fluctuation in Dissolved Oxygen on Spawning of Black Crappie, Pomoxis nigromaculatus.

Document Number 1-20 Minimal Dissolved Oxygen Requirements of Aquatic Life with Emphasis on Canadian Species: A Review.

Document Number 1-21 Detection and Measurement of Stream Pollution.
Document Number 1-22 Dissolved Oxygen.
Document Number 1-23 The Effects of Sewage Pollution on the Fish Population of a Midwestern Stream.
Document Number 1-24 Dissolved Oxygen Requirements of Freshwater Fishes.
Document Number 1-25 Waterborn Dissolved Oxygen Requirements and Criteria with Particular Emphasis on the Canadian Environment.
Document Number 71-1 This Submittal includes the following documents:
OEPA Testimony at the Public Hearings.
A Rebuttal to USEPA Testimony at the Hearings.
Technical Justification for the DO Criterion.
Technical Justification for the Cyanide Criterion.
Justification for the Limited Warmwater Habitat Stream use Classifications.
Summary of OEPA's Justifications.
Use Designation for low flow Streams.
Mississippi DO Standards.
USEPA State Approved WQS with less Stringent DO Requirements.
Document Number 71-2 OEPA Water Quality Survey of the Ottawa River, Allen and Putnam Counties, Ohio.
Document Number 92-1 Submittal from OEPA by James F. McAvoy, Director.
Document Number 92-2 Justification of the Limited Warmwater Habitat Use Designation in Ohio's WQS for Non-Mine Drainage Streams.
Document Number 92-3 Justification of the Limited Warmwater Habitat Use Designation in Ohio's WQS for Mine Drainage Streams.
Document Number 100-2 Submittal by Seif Amragy, Chief Water Quality Planning & Assessment of OEPA, for Dr. Robert M. Sykes.
Document Number 100-3 Submittal by George Garrett, OEPA, of a map showing Ohio's 61 non-mine drainage LWH stream segments.

Statements Submitted for the Hearing Record at the USEPA Public Hearing in Columbus, Ohio, on September 17, 1979:

Document Number 14-2 Statement of the Ohio Municipal League.
Document Number 14-3 Statement of James F. McAvoy, Director, OEPA.
Document Number 14-4 Statement of Ernest K. Rotering, OEPA.
Document Number 14-5 Statement of George Garrett, OEPA.
Document Number 14-6 Statement of Gary L. Martin, OEPA.
Document Number 14-7 Statement of the Ohio River Valley Water Sanitation Commission (ORSANCO).
Document Number 14-8 Statement of Michael B. Lagraff on Behalf of the Standard Oil Company.
Document Number 14-10 Statement of Michael B. Lagraff on Behalf of the Ohio Petroleum Council.
Document Number 14-12 Release by the Council on Wage and Price Stability on the EPA's Proposed Water Quality Criteria.
Document Number 14-13 Comments of the American Petroleum Institute on Water Quality Criteria Proposed by the USEPA.
Document Number 14-14 "Cyanide: An Overview and Analysis of the Literature on Chemistry, Fate, Toxicity, and Detection in Surface Water" Prepared for the Inter-Industry Cyanide Group.
Document Number 14-15 Statement of the City of Columbus.
Document Number 14-16 Statement in Behalf of the Ohio Association of Consulting Engineers.
Document Number 14-17 Statement of Ashland Oil, Inc.

Statements Submitted for the Hearing Record at the USEPA Public Hearing in Dayton, Ohio, on September 19, 1979:

Document Number 20-1 Statement of the Greene County Department of Sanitary Engineering.
Document Number 20-2 Statement by John C. Engle on behalf of the City of Hamilton.
Document Number 20-3 Statement of Harry Moyer, Mayor of the City of Lima.
Document Number 20-4 Technical Statement of the City of Lima.
Document Number 20-5 Statement of Galen Gault of Lima.
Document Number 20-6 Statement of C. Lee Bridges of the State of Indiana.
Document Number 20-7 Statement of the Little Miami Interleague Group.
Document Number 20-8 Statement of James L. Hinchberger, Butler County Sanitary Engineer.
Document Number 20-9 Statement and Technical Submittal by Douglas G. Whitaker on behalf of the Miami Conservancy District.
Document Number 20-10 Statement of the MSD of Greater Cincinnati.

Statements Submitted for the Hearing Record at the USEPA Public Hearing in Akron, Ohio on September 21, 1979:

Document Number 22-2 Statement of the Northeast Ohio Regional Sewer District.
Document Number 22-3 Statement of the City of Canton.
Document Number 22-4 Statement by George H. Watkins on behalf of the Three Rivers Watershed District.
Document Number 22-5 Statement of the Ohio League of Women Voters.
Document Number 22-6 Statement by Edward Bollinger on behalf of the Cuyahoga River Basin Water Quality Committee.
Document Number 22-7 Statement by Jeff Lintern on behalf of the Summit County Sanitary Engineers Office.
Document Number 22-8 Statement by County Sanitary Engineers' Association of Ohio.
Document Number 22-9 Statement of the City of Orville.
Document Number 22-10 Statement of the City of Akron.
Document Number 22-11 Statement of the Cuyahoga County Sanitary Engineering Department.
Document Number 22-12 Chapter VIII entitled "Mill Creek of the OKI 208 Plan."

USEPA Submittals to the Record:

Document Number 15-1 This submittal includes the following letters and documents:
May 17, 1978, USEPA letter to Governor Rhodes disapproving the State's standards.
July 10, 1978, OEPA letter to USEPA with summary of agreements on standards.
August 9, 1978, USEPA letter to Governor Rhodes giving partial approval to the State's Standards.
August 10, 1978, OEPA letter to USEPA.
March 23, 1979, OEPA letter to USEPA agreeing to revise the State's standards.
August 3, 1979, OEPA letter to USEPA and attachments to Ohio public groups stating that OEPA would contest certain USEPA standards.
USEPA publication by Stephen J. Broderius in September 1979, entitled "Aqueous Chemistry, Analytical Measurement, and Toxicity of Cyanide in Aquatic Ecosystems".
USEPA memo from Gary Amendola to William Benjey on flow criteria for the Ohio seasonal warmwater habitat use designation dated September 6, 1979.
Document Number 23-1 The State of Ohio's 1977 Hearing Record on Water Quality Standards and USEPA's pre-public hearings (1979) submittals to the Hearing Record.

Note.—See attachment Number 1 for the contents of this submittal and check this attachment for desired documents.

Document Number 24-1 USEPA's Hearing Record Statement read at the three public hearings in Ohio.
Document Number 27-1 USEPA publication by William A. Brungs in September 1979 entitled "Effects of Cyanide and Reduced Dissolved Oxygen Concentrations on Warmwater Fish".
Document Number 28-1 This Submittal includes the following letters and documents:
Review of OEPA's Economic Criteria for Downgrading.
Evaluation of OEPA's Methodology for Financial Analysis.
OEPA Submittal to GAO on the Costs of USEPA's proposed Promulgation on WQS.
USEPA Rebuttal to GAO on OEPA's Submittal.

Mailed Statements to the Hearing Record:

Document Number 2-1 Submittal of Little Miami Inc.
Document Number 3-1 Resolution of the OKI Executive Committee.
Document Number 3-2 Submittal of OKI on Mill Creek.

Note.—See document Number 22-12.

Document Number 4-1 Submittal of the County of Hamilton.
Document Number 5-1 Submittal of the MSD of Greater Cincinnati.
Document Number 6-1 Submittal of the OKI Citizen Participation Committee.
Document Number 7-1 Submittal by Baker and Hostetler on behalf of RMI Company.
Document Number 8-1 Submittal by Mansfield Products Company.
Document Number 9-1 Submittal from Browning-Ferris Industries of Ohio.
Document Number 10-1 Submittal from Browning-Ferris Industries of Ohio correcting previous submission.

Document Number 11-1 Submittal of the Village of New Boston, Scioto County, Ohio.
Document Number 12-1 Submittal of the Eaton City Council.
Document Number 13-1 Submittal of the City of Delaware.
Document Number 17-1 Submittal of the Ohio Department of Natural Resources.
Document Number 18-1 Submittal of the County of Hamilton.
Document Number 19-1 Submittal of the Ohio Department of Agriculture.
Document Number 21-1 Submittal of the Ohio Water Pollution Control Conference.
Document Number 25-1 Submittal of Lowell V. Dunanay of Lima.
Document Number 26-1 Submittal of the Village of Granville.
Document Number 29-1 Statement by Milton B. Trautman.
Document Number 30-1 Statement by the Wayne County Commissioners.
Document Number 31-1 Statement by David C. Beckett of the University of Cincinnati Department of Biological Sciences.
Document Number 31-2 "Ordination of Macroinvertebrate Communities in a Multistressed River System".
Document Number 31-3 "Variations in the Biotic Composition of the Great Miami River System, with Special Emphasis On the Tait and Hutchings Power Plant Effects".
Document Number 31-4 "The Fish Community of the Great Miami River Near Dayton, Ohio".
Document Number 32-1 Statement by Charles J. Smercina, Mayor, City of Solon, Ohio.
Document Number 33-1 Statement by Kenneth Richardson, Mayor, City of Upper Sandusky, Ohio.
Document Number 34-1 Statement by James H. McGee, Mayor, City of Dayton, Ohio.
Document Number 35-1 Statement by John H. Stratman of Jones and Henry Engineers in Toledo.
Document Number 36-1 Abstract of comments to USEPA in the September 19, 1979, Public Hearing in Dayton by Dale F. Helsel, City Manager of Middletown.
Document Number 37-1 Statement by Robert V, Moschell, Director of Public Utilities, Middletown, Ohio.
Document Number 38-1 Submittal by Joe Hopkinson, Mayor, City of Cridersville, Ohio.
Document Number 39-1 Submittal by W. T. Urwin, Mayor, City of Waverly, Ohio.
Document Number 40-1 Submittal by Kate Slusser, Mayor, City of Dalton, Ohio.
Document Number 41-1 Submittal by Kenneth E. Ream, Mayor, City of Creston, Ohio.
Document Number 42-1 Submittal by James P. Goslee III, Law Director, Village of Lakeview, Ohio.
Document Number 43-1 Submittal by Gertrude Hopkins, Safety-Service Director, Village of Hillsboro, Ohio.
Document Number 44-1 Submittal by Carl B. Everett of DuPont Inc.
Document Number 45-1 Submittal by Eric P. Oswald, Assistant City Engineer, Wooster, Ohio.
Document Number 46-1 Submittal by William J. Veroski, Director Sanitary Engineering, Stark County, Ohio.
Document Number 47-1 Submittal by Lowell E. Roe of the Toledo Edison Company.
Document Number 48-1 Submittal by R. W. Kennedy of UniRoyal Chemical.
Document Number 49-1 Submittal by Mazel M. Russell, Councilwoman, Beloit, Ohio.
Document Number 50-1 Submittal by Wade Eden, Council President, Willard, Ohio.
Document Number 51-1 Submittal by Dr. Andrew M. White of Environmental Resource Associates.
Document Number 52-1 Submittal by J. V. Day of Kaiser Aluminum.
Document Number 52-2 "IJC Recommendation for a Cyanide Objective".
Document Number 52-3 "An Evaluation of the EPA Interim Draft (11/29/77) Criterion Document on Cyanides".
Document Number 52-4 "Cyanide" by the Inter-Industry Cyanide Group.
Document Number 53-1 Submittal by David T. Molvey, Mayor, Doylestown, Ohio.
Document Number 54-1 Submittal by Charles C. King of the Ohio Biological Survey.
Document Number 54-2 "Effects of Dissolved Oxygen on Survival and Behavior of Selected Fishes of Western Lake Erie".
Document Number 55-1 Submittal by William W. Burns, City Manager, Fairborn, Ohio.
Document Number 56-1 Submittal by Gerald G. Greenlick, City Manager, Canfield, Ohio.
Document Number 57-1 Submittal by Leo A. Grant, Director of Public Utilities, Toledo, Ohio.
Document Number 58-1 Submittal by R. Charles Larlham, NEFCO, Akron, Ohio.
Document Number 59-1 Submittal by L. Boehm of Armco Inc.
Document Number 60-1 Submittal by John W. Edwards of Smith and Schnackle for the Ohio Mining and Reclamation Association.
Document Number 61-1 Submittal by Julian M. Suso, Wayne County Regional Planning Commission, Wooster, Ohio.
Document Number 62-1 Resolution by the City of Middletown, Ohio.
Document Number 63-1 Submittal by James Meyer, Village Administrator, Ada, Ohio.
Document Number 64-1 Resolution by the City Council of Shelby, Ohio.
Document Number 65-1 Submittal by L. T. Clere of the Sun Petroleum Products Company.
Document Number 66-1 Submittal by C. M. McNatt, Mayor, Beloit, Ohio.
Document Number 67-1 Submittal by R. C. Salisbury, City Manager, Geneva, Ohio.
Document Number 68-1 Submittal by Ken Amsbaugh, Mayor, Defiance, Ohio.
Document Number 69-1 Submittal by William L. Howard, President, Water Management Association of Ohio.
Document Number 70-1 Submittal by J. G. Crist of U. S. Steel.
Document Number 70-2 Lorain Plant "Thermal Discharge Demonstration".
Document Number 70-3 "A Critique of the Lorain Works Load Allocation Study".
Document Number 70-4 "Suspended Solids Impacts on Water Quality Modeling and Load Allocations for the Black River".
Document Number 72-1 Submittal by Michael I. Hardy of Guven, Merritt, Sogg, and Cohen for the Cleveland Electric Illuminating Company.
Document Number 73-1 Submittal by Christopher R. Schraff of Porter, Wright, Morris, and Arthur for the Ohio Steel Group.
Document Number 72-2 "Cyanide" by the Inter-Industry Cyanide Group.
Document Number 73-3 "A Review of the EPA Red Book: Quality Criteria for Water" by the American Fisheries Society.
Document Number 73-4 "Problems in the Establishment of Water Quality Criteria".
Document Number 73-5 "Mixing Zones".
Document Number 73-6 Ohio Steel Group, Comments on the Proposed Rulemaking.
Document Number 74-1 Submittal by William L. West of Republic Steel.
Document Number 74-2 "Regulation of the Toxic Form of Cyanide in Receiving Waters".
Document Number 74-3 "A Review of the EPA Red Book: Quality Criteria for Water for Cyanide".
Document Number 75-1 Submittal by Martin S. Seltzer of Porter, Wright, Morris, and Arthur for PPG Industries.
Document Number 76-1 Submittal by Edward A. Hayman of Squire, Sanders, and Dempsey for the Chase Bag Company.
Document Number 77-1 Submittal by Michael B. LaGraff, Corporate Environmental Consultant for the Standard Oil Company.
Document Number 77-2 "Assessment of the Present and Projected Condition of Otter Creek".
Document Number 77-3 "An Assessment of Effects of the Thermal Discharge from Toledo Oil Refinery on Otter Creek".
Document Number 77-4 "Benefit-Cost Analysis of the Elimination of Thermal Discharge from Toledo Oil Refinery to Otter Creek".
Document Number 77-5 "An On-Site (In-Situ) 48 Hour Bioassay of Five Stations (Sites) in Otter Creek (Ohio) Using Pimephales Promelas as Test Organisms".
Document Number 78-1 Submittal by L. Boehm of ARMCO Inc.
Document Number 78-2 Final Statement of Armco Steel Corporation.
Document Number 78-3 "A Review of the EPA Red Book: Quality Criteria for Water".
Document Number 79-1 Submittal by David H. Miller of J. L. Steel.
Document Number 79-2 "Comments Regarding the Sections of Ammonia, Cyanide, Oil, and Grease, ph, Phenols, ss, and Zinc in the EPA Red Book".
Document Number 79-3 "Problems in the Establishment of Water Quality Criteria".
Document Number 79-4 "Comments on USEPA Quality Criteria for Water".
Document Number 79-5 "A Critique of the Water Quality Criteria for Ammonia, Cyanide, Iron, Phenol, and Total Dissolved Solids".
Document Number 79-6 "Cyanide: An Overview and an Analysis of the Literature on Chemistry, Fate, Toxicity, and Detection in Surface Waters".

Document Number 79-7 Comments on Proposed Rulemaking on Behalf of the Packaging Corporation of America.
Document Number 80-1 Submittal by R. W. Reeves of America Electric Power.
Document Number 80-2 Supplementary Comments by AEC.
Document Number 80-3 Comments on "Draft Water Quality Criteria and Support Documents" by Utility Water Act Group.
Document Number 80-4 "Review of the Mattice and Zittel Paper: Site-Specific Evaluation of Power Plant Chlorination".
Document Number 80-5 "Chlorine Toxicity in Marine Ecosystems".
Document Number 80-6 "Chlorine Toxicity in Freshwater Ecosystems".
Document Number 80-7 "Collaborative Test Results for Clorine Analysis by Amperometric Titration".
Document Number 81-1 Submittal by J. P. White of Day, Ketterer, Raley, Wright, and Rybolt for the Timken Company.
Document Number 82-1 Submittal by L. Boehm of ARMCO Inc.
Document Number 83-1 Submittal by Fred J. Lange Jr. of Fuller, Henry, Hodge, and Snyder for Ohio Electric Utilities.
Document Number 84-1 Submittal by R. M. Glover of Proctor and Gamble.
Document Number 85-1 Submittal by Ruth E. Ferris, Clerk-Treasurer, Loudonville, Ohio.
Document Number 86-1 Submittal by Kenneth E. Richardson, Mayor, Upper Sandusky, Ohio.
Document Number 87-1 Submittal by Ronald R. Janke, Attorney for SCM Corporation, for SCM Corporation.
Document Number 88-1 Submittal by Ronald R. Janke, Attorney for Olin Corporation, for Olin Corporation.
Document Number 89-1 Submittal by Bruce Kranz of the North American Coal Association.
Document Number 90-1 Submittal by Russell E. Kross of the Mead Corporation.
Document Number 91-1 Submittal by E. B. Long, NOACA, Cleveland, Ohio.
Document Number 93-1 Submittal by Staughton Lynd, Attorney Tristate Conference, for the Northeast Ohio Legal Services.
Document Number 94-1 Submittal by Leo Weaver of ORSANCO.

Note.—This is a correction to 14-7.

Document Number 95-1 Submittal by R. J. Belock of the Austins Powder Company.
Document Number 96-1 Submittal by E. J. Burkett of the Goodyear Tire and Rubber Company.
Document Number 97-1 Submittal by Henry L. Schulte Jr. of the Columbus and Southern Ohio Electric Company.
Document Number 97-2 "The Effects of Intermittent Chlorination on 10 Species of Freshwater Fish".
Document Number 97-3 "Report on Acceptable Levels of Chlorine Discharge at the Conesville Generating Station".
Document Number 97-4 "Toxicity of Intermittent Chlorination to Bluegills Lepomis Macrochirus: Interaction with Temperature".
Document Number 97-5 "The Toxicity of Chlorine to Freshwater Organisms Under Varying Environmental Conditions".
Document Number 97-6 "The Effects of Intermittent Chlorination on Rainbow Trout and Yellow Perch".
Document Number 97-7 "The Effects of Monochloramine on Selected Riverine Fishes".
Document Number 98-1 Submittal by John W. Edwards of the Ohio Mining and Reclamation Association.
Document Number 99-1 Submittal by Daniel E. Rogers of the Consolidated Coal Company.
Document Number 100-1 Submittal by George R. Johnson, Jr., Staff Attorney for the Council of Wage and Price Stability.

Appendix B—Response to Comments

I. General Comments

1. *Comment:* Several commenters objected to EPA's use in this proceeding of *Quality Criteria for Water.*

Response: EPA published *Quality Criteria for Water* (QCW) in response to the requirements of § 304(a) of the Clean Water Act (33 U.S.C. 1314(a)). QCW is a guidance document recommending appropriate criteria to protect various designated uses. EPA applied criteria from QCW in the absence of better information, but clearly allows variations based on local circumstances that justify different numerical limitations equally protective of the designated uses of the stream. However, EPA believes that QCW represents the synthesis of the best scientific information available.

2. *Comment:* One commenter stated that water quality standards change too frequently, so that impending changes become an excuse for noncompliance.

Response: States are required to consider revision of water quality standards at least each 3 years in accordance with Section 303(c) of the Act and 40 CFR 35.1550. However, it is not necessarily true that major changes will be needed each time. The periodic revision of water quality standards may be required to meet the goals of the Clean Water Act which provide for the protection and propagation of fish, shellfish and wildlife and for recreation in and on the water wherever attainable.

3. *Comment:* Several comments were received which expressed the belief that EPA was hurriedly forcing its own water quality standards on Ohio, while not allowing industries time to develop economic data on the costs of the standards.

Response: The main elements of EPA's action today is the establishment of numerical criteria for certain use classifications and the denial of the "downgrading" of the use classification for specific stream segments. Economic impact data do not play a part in the setting of numerical criteria to support use designations; criteria are established based upon scientific consideration of acceptable pollutant levels which will allow a use to be attained. Economic factors are, however, directly relevant in assessing the propriety of downgrading. Such information was to be submitted by the State at the time of its adoption of revised standards. Opportunity was also provided to the State and interested persons to submit this information in response to the proposed rulemaking.

4. *Comment:* A comment was received which stated that QCW should not be applied to Lake Erie.

Response: The only issue concerning Lake Erie addressed in this rulemaking, is the definition of mixing zones. QCW does not recommend numerical criteria for mixing zones.

II. Comments on the Dissolved Oxygen Criterion for Warmwater Habitat

The following summary of the 49 comments and the respective EPA responses address the issue of the minimum instantaneous dissolved oxygen criterion for Warmwater Habitat. Based on the analysis of these comments, EPA is establishing a criterion of a minimum instantaneous concentration of 5 mg/l for dissolved oxygen for Warmwater Habitat; and a new Modified Warmwater Habitat use designation which has the same criteria as Ohio's Warmwater Habitat use including a 5 mg/l instantaneous dissolved oxygen minimum for 16 hours of any 24 hour period and 4 mg/l for 8 hours of a 24 hour period. EPA remains convinced that a minimum instantaneous dissolved oxygen criterion of 5 mg/l is necessary to support a Warmwater Habitat which is not D.O. limited. However, in deference to the questions of environmental and economic attainability raised by the OEPA and others, EPA is assigning the Modified Warmwater Habitat use designation to most of the stream segments designated for Warmwater Habitat or Limited Warmwater Habitat by the OEPA. These stream segments must be upgraded to Warmwater Habitat if additional studies by OEPA show it to be economically and environmentally attainable. The OEPA is expected to perform the studies as a part of the implementation of the annual State-EPA Agreement.

1. *Comment:* Some commenters stated that the dissolved oxygen criterion adopted by the OEPA more accurately reflects the natural dissolved oxygen regime in Ohio rivers and streams than does the EPA proposal.

Response: Evidence that adequately demonstrates that the OEPA dissolved oxygen criterion more accurately

reflects the natural D.O. regime in Ohio, was not submitted. However, EPA is establishing and applying a Modified Warmwater Habitat use designation which will accommodate situations where the natural dissolved oxygen minimum is less than 5 mg/l and equal to or greater than 4 mg/l.

2. *Comment:* The OEPA stated that the low flow periods occur during late summer and early fall, not during the spring when spawning occurs.

Response: Evidence of the low flow occurrences in relation to spawning of fish in Ohio was not submitted to the hearing record. Reported spawning seasons for a number of fish species found in Ohio generally extend into summer with some spawning lasting until early fall.

3. *Comment:* The OEPA stated that EPA approval of water quality standards in other States providing less than 5 mg/l minimum dissolved oxygen concentration and the findings of the EPA Advanced Wastewater Treatment Task Force that compliance with dissolved oxygen standards less than 5 mg/l provided significant water quality benefits is reason to discredit the EPA position on the 5 mg/l dissolved oxygen criterion.

Response: A 5 average/4 minimum D.O. standard may provide significant water quality benefits. However, scientific evidence available indicates that with D.O. concentrations below 5 mg/l, aquatic communities are more greatly stressed, with the more sensitive species and the more sensitive stages in species' life cycles being significantly affected.

EPA has recognized the differences in species sensitivity related to D.O. concentrations and has provided for a range of warmwater habitat use classifications. The temporary modified Warmwater Habitat use classification set forth in Ohio's standards will permit the States to make a stream by stream analysis to determine the appropriate use classifications and accompanying D.O. criteria.

There is no inconsistency between the EPA approved water quality standards and the EPA AWT Task Force finding that significant water quality benefits can be provided at a D.O. level of less than 5 mg/l.

Similarly, EPA has approved varying dissolved oxygen criteria in different States. Even under the policy of "presumptive applicability" QCW values were not imposed in all cases; EPA policy provided for variation of the values based on local conditions.

4. *Comment:* Statements were given quoting a variety of laboratory studies that demonstrated no adverse effects at dissolved oxygen concentrations below the proposed criterion of an instantaneous minimum of 5 mg/l.

Response: Certain fish species or life stages are less sensitive to reduced dissolved oxygen than others. Consequently, the fact that no effects were observed with one species or life stage (e.g., spawning is a very resistant stage), does not mean that there are not adverse effects observed with other more sensitive species or life stages at the same pollutant concentrations. Aquatic organisms are too variable in their response to stress to expect all species to respond similarly.

5. *Comment:* A number of personal observations were reported on the presence of game fish or well-balanced fish communities in areas where dissolved oxygen concentrations were or had been below 5 mg/l.

Response: Thorough field studies that attempt to determine the presence or absence of aquatic populations in relation to pollution or other stress are extremely difficult, costly, and time consuming. Observations over short time periods such as a few weeks or periodically over a few months are generally insufficient to demonstrate any but the most gross cause and effect relationships. For example, one cannot determine from one observation of a fish whether or not that individual's growth has been inhibited by low dissolved oxygen concentrations. The advantage of laboratory studies is that the individuals are captive and can be studied over a period of time. Even if there is good documentation of an adverse effect existing in a section of a river or stream, there is no way to be sure that the collected organisms were not moving through that area from one that was not stressed, such as a tributary. A study, such as that by Ellis (1937, 1944), conducted in a variety of areas (982 locations) over a 5-year period, is much more likely to result in sound judgments about the quality of an aquatic community than the short studies characteristic of those cited by the State of Ohio. Ellis (1937, 1944) as well as Brinley (1944) in his two year study of the Ohio River Basin, both conclude that, below 5 mg/l, the conditions of fish are gradually worsened.

6. *Comment:* The American Fisheries Society review of the dissolved oxygen criteria in QCW was cited as evidence that the dissolved oxygen criterion in QCW is deficient.

Response: The major concern of the review committee of the American Fisheries Society was that QCW did not follow the recommendations of Doudoroff and Shumway (1970), Davis (1975), and the Blue Book (NAS/NAE, 1973). The procedure in those publications involved temperature or seasonally dependent dissolved oxygen criteria with different levels of protection. This procedure is considered unjustifiable and cumbersome in practice by many fishery scientists and regulatory managers. For example, the International Joint Commission (IJC) has extensively analyzed this newer procedure during the past two years in relation to recommending a dissolved oxygen criterion for the Great Lakes and has concluded that its present criterion, 6.0 mg/l, is still the best at this time. The 6.0 mg/l criterion is currently in the Great Lakes Water Quality Agreement of 1978 between the United States and Canada.

7. *Comment:* A variety of comments dealt with some laboratory studies that documented adverse effects of dissolved oxygen concentrations between 4.0 and 5.0 mg/l. These comments include those prepared by the OEPA on October 2, 1979 (Dudley, et al.) and inserted into the record of this proceeding.

Response: These comments typically address observations by the authors of the laboratory studies. Typically such studies result in a variety of observations both negative (no effect observed) and positive (adverse effects on some biological function). If an effect on one function is observed between 4 and 5 mg/l, and another function is unaffected, the latter observation cannot cancel the observation of the adverse effect. For example, Brungs (1979) cited Siefert and Spoor (1974) as stating that there was a reduction of 20 percent in the survival of smallmouth bass embryos and larvae at 4.4 mg/l where hatching occurred earlier than normal. OEPA in Dudley et al. (1979, p. 7) disagrees by adding that Siefert and Spoor (1974) observed *only* a 9.5 percent reduction in survival of the same species in a second experiment with a mean concentration 4.4 mg/l (range of 4.2 to 4.8 mg/l). However, both experiments show an order of magnitude population reduction.

It is important to note that many early life stages require D.O. levels above 5.0 mg/l, as evidenced here. This reinforces EPA's position that minimum D.O. levels of 5.0 mg/l are needed at low flow conditions to support a warmwater habitat. Maintaining a 5.0 mg/l D.O. level during low flow conditions will assure the occurrence of the higher D.O. levels needed during the prime spawning and early life stage periods.

In summary the proposed dissolved oxygen criterion of a minimum concentration of 5 mg/l is based on the following major considerations:

a. Growth and feeding efficiency of larval or juvenile fish of some species is reduced at lower dissolved oxygen concentrations, especially concentrations below 5 mg/l when temperatures are above 20°C.

b. Growth and survival of the larvae of several fish species is reduced at lower D.O. concentrations, especially below 5 mg/l.

c. The extensive field studies of Ellis and Brinley show that good quality mixed warmwater fish populations, including game fish, were most often associated with water containing 5 mg/l or more dissolved oxygen.

d. Stress from other sources, particularly toxicants, high temperatures, and disease, is aggravated by low dissolved oxygen concentrations.

e. Laboratory studies are carried out under controlled and usually pristine conditions and optimum temperatures, in which the test fish are not required to compete for or capture food, are not threatened by predation, and are not subjected to other sources of stress. Thus, the resulting data are often the oxygen requirements of fish living in very favorable conditions seldom encountered in nature. Less favorable conditions would require greater dissolved oxygen concentrations to maintain balanced and reproducing biota.

In conclusion, a minimum criterion below 5 mg/l would: (1) cause reduced growth, survival, and reproductive success, (2) cause possible population or community shifts, and (3) provide reduced protection to aquatic life from the sublethal effects of lowered dissolved oxygen concentrations.

III. Comments on the Limited Warmwater Habitat Use Classification

The OEPA adopted parameter and time specific downgradings, under the Limited Warmwater Habitat Use Designation, for 111 stream segments of which 50 were attributed to irretrievable acid mine drainage impacts. The OEPA did not, however, provide adequate segment specific downgrading justifications as required by 40 CFR 35.1550(c)(3), with the submission of the adopted Ohio Water Quality Standards to the Regional Administrator. EPA is herein temporarily applying the Modified Warmwater Habitat Use Designation to all but 17 warmwater stream segments which have been given the Warmwater Habitat Use Designation. The OEPA must conduct further studies to determine what use designation should apply to each of the stream segments including the 111 before changes can be approved by EPA.

All of the stream segments which the OEPA downgraded to the Limited Warmwater Habitat Use Designation were attributed to one or more of the three downgrading justifications allowed by 40 CFR 35.1550(c)(3). These downgradings were attributed to: (1) natural background conditions, (2) irretrievable man-induced conditions, or (3) substantial and widespread adverse economic and social impact due to the imposition of effluent limitations more stringent than the technology-based requirements of Sections 301(b)(2)(A) and (B) of the Act.

One of the difficulties in examining the hearing record was the tendency of commenters to confuse and mix the different bases for justification of downgradings. Often, several different bases for downgrading were cited for a given stream segment with little or no technical support. In the following paragraphs, the nature of the comments is placed in the context of the three downgrading bases.

Natural Background Conditions

The most common natural conditions cited by the OEPA justifying downgrades are low stream slope and low flow. Chapter 5.2.c.2(a) of the *Guidelines* states:

"The basis for an exception should have limited application. It should be recognized that most water bodies have some communities of fish, shellfish and wildlife. However, examples of natural background conditions which may preclude the aquatic life use include streams with leachate from natural heavy metal deposits and streams with natural ephemeral, intermittent or low flow conditions."

General information, such as the stream slope and low flow discharge volume, was presented by the OEPA to demonstrate the infeasiblity of attaining Warmwater Habitat Use Designation standards during low flow. The information does not include projections of water quality conditions without man-induced pollutants (e g., natural conditions), nor is any stream-specific water quality data presented in many cases. Therefore, the information presented did not demonstrate that low flow conditions mean that the streams cannot attain Ohio's Warmwater Habitat standards. Such a showing would constitute a justification attributable to natural background conditions.

Other general information was presented by the OEPA in the form of equations and generalized graphs relating stream slope to ultimate oxygen demand in streams. However, such generalizations cannot account for stream specific variations influencing the oxygen balance. Also, the OEPA maintained that, on the basis of the information presented, downgradings to the Limited Warmwater Habitat use classification should be allowed because of technical or economic reasons. The OEPA did not indicate what the economic impacts of increased treatment or zero discharge would be for the specific stream segments in question.

Man-Induced Irretrievable Impacts

Several stream segment downgradings were attributed to irreversible man-induced conditions, especially combined sewer overflows, agricultural non-point pollution, dams and acid mine drainage problems. Chapter 5.2.c.2(b) of the *Guidelines* lists 3 primary situations which may qualify a segment for downgrading for reasons of irretrievable impacts: (1) where the designated use cannot be attained because of non-point source pollution which cannot be abated by Best Management Practices, (2) where hydrological modification cannot be removed or operated to restore the use, and (3) where instream toxicants due to man's past activities cannot be removed over a 20 year planning period.

Combined sewer overflow (CSO) impacts are subject to analysis and corrective action through the municipal construction grants program. Information was not presented to show that CSO impact corrective actions would not attain the required D.O. limits for Warmwater Habitat Use in specific stream segments. In addition, no information was presented to demonstrate that the Warmwater Habitat Use Designation cannot be attained with the use of Best Management Practices. While available water quality data were presented for acid-mine drainage streams, there were no segment specific analyses of the degree to which the streams are affected. In some cases existing dams were cited as an irretrievable reason for the non-attainment of the Warmwater Use Designation. However no specific analysis was provided to support this contention.

Many impacts upon a stream segment's water quality may be judged irretrievable because of the large cost of correction and resulting economic impact. The costs of agricultural BMP's, mine reclamation or remedying hydrological alteration are in this category. However, no segment specific analysis was presented on the impacts of such costs.

Substantial and Widespread Economic and Social Impacts

Comments pertaining to stream segments for which standards attainment might have substantial and widespread economic and social impact, were considered with respect to the requirements of 40 CFR 35.1550(c)(3)(iii) and Chapter 5–2.C.2c. of the *Guidelines.* Under these requirements, the basic conditions for downgrading justifications are the existence of substantial and widespread adverse economic and social impacts as a result of imposition of controls greater than BAT–BCT/BPWTT to attain current water quality standards for a stream segment. Information relevant to such a justification is considered adequate when it indicates the environmental results that reasonably can be expected following the necessary expenditures. The analysis must also show how the additional pollution control expenditures for a segment will affect the economic and social conditions in the area. The effects of such expenditures can include: industrial plant closures or curtailments that result in employment losses either directly or indirectly, financial difficulties for local government, high sewage treatment user charges, and other relevant measures of adverse effects on area economic and social conditions. This information would be part of the use attainability analysis required as part of the justification evaluation.

For a complete justification, alternative means of attaining water quality standards on a segment such as control of non-point sources, must also be evaluated to determine their cost-effectiveness relative to point source controls. Information provided must be supportable and verifiable and sources must be documented.

As indicated, the impacts must be both substantial and widespread to justify a downgrading. The *Guidelines* delineate substantial and widespread effects by comparison to other economic factors affecting an area's economy and to national economic conditions and fluctuations, which can be expected to persist for periods longer than provided for by adjustment payments such as unemployment compensation. The effects must be detectable in an area appropriate for measurement, at least as large as a county or SMSA and, if appropriate any larger areas such as defined by the U.S. Department of Commerce.

Overall, the economic information provided in the hearing record is relative to specific dischargers, stream segments, larger areas, and the State. The information provided for each segment is inadequate in at least one of the following ways:

1. Where cost information is presented for several dischargers on affected segments:

(a) In many cases it cannot be determined whether these costs are for the most cost-effective treatment methods.

(b) Sources of cost information are often not documented or verified and methods of determining costs often are not explained.

(c) Cost information is provided as an indicator of impacts, but the information is not related to some other indicators of area, social and economic conditions in order to discern impacts. Cost does not in and of itself indicate impacts.

(d) Information on cost increases and rates of increase need to be related to baseline costs as well as to area conditions.

2. Where impact information is provided, it is often very general and non-specific. The methods and data for arriving at stated conclusions often are not documented or explained.

3. Some verifiable well-documented impact information is presented for some individual dischargers, but not for all dischargers on a segment. Cost and impact information for all dischargers on a segment should be submitted before a downgrading can be justified.

4. Conversely, an average impact for a multi-segment area or for the State does not provide the segment specific impact information necessary for a segment downgrading justification. Segment specific information is necessary.

5. Very little information was supplied on the cost-effectiveness of alternative means of meeting water quality standards. Notably lacking is cost information on Best Management Practices on those segments with non-point pollution problems.

More specifically submittals by the Ohio Environmental Protection Agency also provide several other general factors to measure adverse economic and social impact:

1. Unavailability or infeasibility of technology is offered as a basis for economic and social impacts. This reason is presented for only one segment (Tuscarawas River from Pittsburgh Plate Glass to confluence with Sandy Creek). In such a case, it is necessary to verify the unavailability or infeasibility of technology and to show the impacts of a plant closing on the area.

2. The existence of combined sewer overflow problems along with other segment problems is presented as a basis for economic and social impacts for twenty-five segments. Combined sewer overflow problems are evident where violation of standards results from discharge bypasses. The existence of combined sewer overflows, in and of itself, does not constitute an evaluation of the impacts of resolving these problems. The most cost-effective means of controlling sewer overflows must be the basis for cost estimates used to determine area impacts.

3. An indication of "significant far-reaching social or economic impact" is shown for segments not affected by acid mine drainage. The meaning of this statement is not explained. No information is supplied to support the application of this statement to specific segments.

4. Lack of Federal funding of municipal sewage and treatment plants is offered as a basis for showing economic and social impact due to the shift of the full cost burden to area citizens. However, compliance deadline extensions from the 1977 goals of the Clean Water Act under Section 301(i) may allow funding of municipal sewage treatment plants within legal time frames. Many Ohio municipalities have received an extension.

5. Data were submitted on the costs to municipalities to achieve a minimum dissolved oxygen criterion of 5 mg/l. EPA is, however, establishing a dissolved oxygen criteria of 5 mg/l only on those segments which are currently achieving that level. Additional cost data will be developed before facilities are subject to more stringent limitations to meet a minimum D.O. Criterion of 5 mg/l.

IV. Comments on Seasonal Warmwater Use Classifications

Eight comments on the Seasonal Warmwater Habitat use designation were received. They are addressed in the following paragraphs.

1. *Comment:* The omission of numerical standards for the Seasonal Warmwater Habitat use designation renders it impractical and cumbersome to apply.

Response: There was a misunderstanding on the part of some reviewers of the proposed rulemaking. On page 39499 of the proposed rules it is stated that the criteria associated with the Seasonal Warmwater Habitat use were only omitted from printing, not eliminated from the standards. They were omitted due to the length of the criteria and the formatting procedure used in a proposed rulemaking. The criteria associated with the Seasonal Warmwater Habitat use were not disapproved.

2. *Comment:* Under the disapproved Ohio water quality standards, a stream segment must undergo a rigorous biological examination to determine whether it will receive a Seasonal Warmwater Habitat use designation. The disapproved Ohio water quality standards are fully adequate to ensure that only truly deserving segments are given the Seasonal Warmwater Habitat use designation.

Response: EPA understands that the OEPA plans to justify the application of the Seasonal Warmwater Habitat use. However, it is necessary to be clear that any downgrading must be justified by the State and approved by the Regional Administrator. The use of the Seasonal Warmwater Habitat Classification must be made clear, so that there will not be any misunderstanding of the definition when the standards are promulgated.

An examination of OEPA's procedures for determining use designations for low flow streams found in the proposed Memorandum of Understanding between Region V of EPA and the OEPA (Hearing Record Submittal 1-2), reveals that OEPA's interpretation of the applicability of the Seasonal Warmwater use may be in direct conflict with the seasonal aspect of the definition. OEPA's procedures state that determination of use designations is based upon periods in which aquatic communities inhabit a segment and the suitability of a low flow stream habitat to support balanced communities of aquatic life on an *annual* basis. It further states, in order for a low flow stream to be classified as Warmwater Habitat two basic requirements need to be met: (1) there must be a balanced assemblage of aquatic organisms present, and (2) the aquatic communities must be able to inhabit the stream on an *annual* basis. OEPA seems to define Seasonal Warmwater Habitat as follows: Waters *not* capable of supporting a balanced assemblage of aquatic organisms on an annual (all year) basis, and which therefore will not be required to attain Warmwater Habitat uses at any time. EPA maintains that this is contrary to the intended seasonal use of the classification and does not provide adequate protection of biota.

V. Comments on Mixing Zones

1. *Comment:* Fifteen comments stated that effluents do not conform to fixed boundaries and therefore mixing zones should be established on a case-by-case basis. Ancillary to this was the comment that there is no scientific basis for the limits established and that knowledge of local conditions is necessary for setting mixing zone. It was concluded that since OEPA is more familiar with these conditions, they are better able to set limits on a case-by-case basis. These comments appear to be related and will be discussed together.

Response: The standardized geometric mixing zone limitations adopted by OEPA were previously approved by EPA, and therefore are not subject to change in these proceedings. EPA's changes to the mixing zone rules allow for case-by-case deviations from the standard size definition, subject to prior approval by Regional Administrator.

2. *Comment:* The requirement that 100 percent of the mixing zone meet the 96 hour TLM was considered unreasonable by eight commenters.

Response: EPA is uncertain as to the technical basis of OEPA's requirement that 90 percent of a mixing zone meet the 96 hour LC50. It may be based on an assumption that some dilution or reduction in toxicity will take place in the immediate vicinity of the discharge. No data was presented to support the 90 percent requirement adopted by Ohio. This limitation can be criticized just as the size limitations. It is a regulatory device with limited scientific justification, which probably should be set on a case-by-case basis depending upon the nature of the contaminant. However, there is a regulatory need for certain absolute requirements. Meeting the 96 hour LC50 throughout the mixing zone, rather than 90 percent, is more protective of aquatic resources and more feasible to measure. As has been pointed out in the public hearing record, discharged effluents do not necessarily conform to any fixed boundaries. Thus, the 90 percent—10 percent areas will be constantly changing and not susceptible to measurement or enforcement. More important, however, the OEPA limitation may allow an area of immediate toxicity to aquatic life that enters the 10 percent area. Fish are often attracted into these areas, particularly if the discharge is somewhat warmer than the receiving water-body. Such conditions commonly exist in late fall, winter and spring when river and lake temperatures approach freezing and effluent temperatures are usually warmer. A classic example of this problem occurs at power plants where fish are attracted to the warm thermal plume (often in the discharge structure itself or immediately adjacent to it) and the discharge is intermittently chlorinated. These conditions can cause and have caused fish kills. The OEPA 90 percent provision would allow this and other similar situations to occur. The EPA rule prevents this situation and is easier to monitor and enforce, since a sample can be taken at the point of discharge rather than out in the river itself. In addition it should be noted that the International Joint Commission has recommended that "concentrations of toxic materials at any point in the mixing zone where important species are physically capable of residing should not exceed the 24 to 96 hour LC50." EPA's requirement is consistent with that recommendation. Nothing in the EPA proposal precludes the consideration of diffusers or high velocity areas where fish cannot reside.

3. *Comment:* Four commenters objected to the bioconcentration clause in the mixing zone language and stated that it should be moved or deleted. Two comments noted that test methods had not been promulgated and no numbers for bioaccumulation were given in the Red Book, thus, EPA could not impose such a requirement.

Response: One set of comments stated that "the companies recognize that the implications of bioaccumulating of materials are serious" . . . then recommends that the entire proposal be deleted. EPA believes that the bioaccumulation provision is an extremely important part of the standards, since it goes to the heart of persistent substances and therefore necessitates the requirement. It is true that there are no official testing methods for measuring the tendency of substances to bioaccumulate. However, methods do exist for monitoring bioaccumulation both in the waterbody and in the laboratory. Specific guidance as to methodology, selection of species, number of species to be tested etc., need not, in EPA's view, be provided in the regulation. If such technical detail is needed it can be provided in a guidance manual after adoption of the regulation.

Some of the criteria numbers proposed in the Red Book are based on the potential for bioaccumulation of certain substances, i.e., Aldrin/Dieldrin, Chlordane, DDT, Heptachlor, etc. In addition, the criteria rationale contain information on bioaccumulation potential.

Finally, it should be noted that the EPA language concerning bioaccumulation is consistent with that proposed by the IJC.

4. *Comment:* One comment noted that "no provisions were included about overlapping mixing zones and cumulative or synergistic effects * * *"

Response: Language concerning overlapping mixing zones and cumulative or synergistic effects has not been included in the proposed standards in an effort to simplify the regulations. As long as the regulations concerning toxicity and size are met, it is unlikely

that overlapping mixing zones would create a problem. In addition, the information concerning synergistic effects of chemicals is extremely limited. As our knowledge of these effects increases, it may be necessary to incorporate new language and limitations into the mixing zone requirements.

5. *Comment:* Five commenters felt that EPA should not approve mixing zone waivers. Some felt that EPA involvement is needlessly duplicative, costly and delaying and usurps State authority.

Response: EPA has an obligation under section 402 of the Act to review, approve and, where necessary, disapprove permits written by OEPA. Any permit submitted with limitations based upon a mixing zone waiver may be similarly reviewed and approved or disapproved. The wording in the water quality standards does not change or add anything new to this process. It does not in any way usurp present State authority. This process assures that all applicable State and Federal regulations are met.

6. *Comment:* Sixteen comments stated that mixing zones in small streams (i.e., 100–120 feet wide, with a 7010 low flow of zero and an annual low flow of 2–3 cfs) were not possible and the entire concept of mixing zones and zone of passage must be modified for headwater streams.

Response: Where effluent volumes are high in relation to natural stream flow, the concept of a mixing zone with the size limitations proposed become very constraining to the discharger. In some cases, effluent quality may need to be equal to the water quality standards limitations.

VI. Comments on Analytical Methods, Sample Collection and Preservation

Comment: Four comments were received on analytical methods; sample collection and preservation contained in the EPA proposal. The OEPA indicated that Section 3745–1–03(A) of the OAC does not include reference to 40 CFR Part 136 for analytical methods, but, 3745–1–03(B), pertaining to sample collection and preservation, should be retained. A second commenter proposed that 3745–1–03(B) should be retained until a proper technical comparison can be made between the adequacy of procedures in 3745–1–03(B) and EPA procedures. A third commenter stated that 40 CFR Part 136 does not prescribe sampling collection and preservation methods; nothing in 40 CFR Part 136 refers to its applicability for the measurements required to establish or determine compliance with water quality standards; and, there is no basis in law for EPA requiring the OEPA to adopt 40 CFR Part 136. A fourth commenter stated that several of the Lake Erie Water Quality Standards for chemical compounds are so low as to require analysis of concentrations at and below analytical detection levels.

Response: 40 CFR Part 136 was included in the water quality standards adopted by the OEPA as Section 3745–1–03(A), and is being retained by USEPA. Section 3745–1–03(B) included by the OEPA makes reference to two publications for sample collection and sample preservation prepared by the OEPA and Ohio Department of Health, respectively. There are some inconsistencies between these documents, and procedures recommended in 40 CFR Part 136 and the documents referenced therein. These inconsistencies pertain to sample holding times and preservation. To the extent that procedures and practices in these manuals are inconsistent with those in 40 CFR Part 136 (and documents referenced therein), they are superseded to insure compatibility between NPDES permit data and ambient water quality data. (Analytical methodology requirements for NPDES permits is established in 40 CFR 122.53(d)(7)).

Footnote 1 of Table 1 of 40 CFR Part 136 includes direct reference to "Methods for Chemical Analysis of Water and Wastes, 1974" USEPA, Table 2, pp. viii–xii. This referenced material deals directly with sampling and preservation of samples prior to analysis. Hence, 40 CFR Part 136 does reference sample collection and preservation methods. While 40 CFR Part 136 does not explicitly refer to the establishment of or the compliance determination with water quality standards, it would be poor practice to employ different test procedures for such directly related items as NPDES permit effluent limitations and water quality standards. NPDES permit limits and water quality standards are also related through the wasteload allocation process. Hence, the adoption of different procedures for NPDES and water quality standards purposes, as suggested by one commenter, makes little sense.

The comment regarding analytical detection levels and Lake Erie Water Quality Standards, did not cite specific chemicals or detection levels. Hence, a specific response cannot be made. In general, the concentrations for Lake Erie Water Quality Standards are determinable with methods contained in 40 CFR Part 136.

[FR Doc. 80-37208 Filed 11-26-80; 8:45 am]
BILLING CODE 6560-29-M

40 CFR Part 180

[PP OE2292/R288; PH-FRL 1684-1]

Tolerances and Exemptions From Tolerances for Pesticide Chemicals in or on Raw Agricultural Commodities; Thiabendazole on Carrots

AGENCY: Environmental Protection Agency (EPA).

ACTION: Final rule.

SUMMARY: This rule establishes a tolerance for the fungicide thiabendazole [2-(4-thiazolyl)benzimidazole] on carrots at 10 parts per million (ppm). This regulation was requested by the Interregional Project No. 4 (IR-4). This regulation establishes the maximum permissible level for residues of the subject fungicide on carrots.

EFFECTIVE DATE: Effective on November 28, 1980.

ADDRESS: Written objections may be filed with the Hearing Clerk, Environmental Protection Agency, Rm. 3708 (A-110), 401 M St., SW., Washington, D.C. 20460.

FOR FURTHER INFORMATION CONTACT: Clinton Fletcher, Registration Division (TS-767), Office of Pesticide Programs, Environmental Protection Agency, Rm. E-124, 401 M St., SW., Washington, D.C. 20460, (202-426-0223).

SUPPLEMENTARY INFORMATION: EPA issued a notice that was published in the Federal Register of September 26, 1980 (45 FR 63889) that the Interregional Research Project No. 4 (IR-4), New Jersey Agricultural Experiment Station, PO Box 231, Rutgers University, New Brunswick, NJ 08903, had submitted pesticide petition number OE2292 to EPA on behalf of the IR-4 Technical Committee and the Agricultural Experiment Station of Michigan.

This petition requested that the Administrator, pursuant to section 408(e) of the Federal Food, Drug, and Cosmetic Act establish a tolerance for residues of the fungicide thiabendazole [2-(4-thiazolyl)benzimidazole] in or on the raw agricultural commodity carrots at 10 ppm.

The data submitted in the petition and all other relevant material have been evaluated. The pesticide is considered useful for the purpose for which the tolerance is sought. It is concluded that the tolerance will protect the public health. Therefore, 40 CFR Part 180 is amended as set forth below.

Any person adversely affected by this regulation may, on or before December 29, 1980, file written objections with the Hearing Clerk, EPA, Rm. M-3708 (A-110), 401 M St., SW., Washington, D.C.

20460. Such objections should be submitted in quintuplicate and specify the provisions of the regulation deemed objectionable and the grounds for the objections. If a hearing is requested, the objections must state the issues for the hearing. If a hearing is granted, the objections must be supported by grounds legally sufficient to justify the relief sought.

Note.—Under Executive Order 12044, EPA is required to judge whether a regulation is "significant" and therefore subject to the procedural requirements of the Order or whether it may follow other specialized development procedures. EPA labels these other regulations "specialized." This regulation has been reviewed, and it has been determined that it is a specialized regulation not subject to the procedural requirements of Executive Order 12044.

Effective date: November 28, 1980.

(Sec. 408(e), 68 Stat. 514 (21 U.S.C. 346a(e)))

Dated: November 20, 1980.

Edwin L. Johnson,

Deputy Assistant Administrator for Pesticide Programs.

Therefore, Subpart C of 40 CFR Part 180 is amended by alphabetically inserting the raw agricultural commodity "carrots" in the table under § 180.242 to read as follows:

§ 180.242 Thiabendazole; tolerance for residues.

* * * * *

Commodities	Parts per million
* * * * *	
Carrots (post-h)	10
* * * * *	

[FR Doc. 80-37082 Filed 11-26-80; 8:45 am]

BILLING CODE 6560-32-M

DEPARTMENT OF THE INTERIOR

Bureau of Land Management

43 CFR Public Land Order 5759

[CA-5771]

California; Partial Revocation of Public Land Order No. 281, as Amended, by Public Land Order No. 2312

Correction

In FR Doc. 80-29858 appearing at page 63851 in the issue for Friday, September 26, 1980, make the following correction:

On page 63851, in the last column, the next to the last line should end with a comma.

BILLING CODE 1505-01-M

43 CFR Public Land Order 5776

[AA-13281]

Alaska; Revocation of Public Land Order No. 850; Modification of Public Land Order Nos. 5186 and 5187; and Classification of Land for Conveyance to Cook Inlet Region, Inc.

AGENCY: Bureau of Land Management, Interior.

ACTION: Public Land Order.

SUMMARY: This order revokes Public Land Order No. 850 and classifies the lands for conveyance to Cook Inlet Region, Inc., under the Alaska Native Claims Settlement Act.

EFFECTIVE DATE: November 28, 1980.

FOR FURTHER INFORMATION CONTACT: Beau McClure (202) 343-6511, or Robert D. Arnold (907) 271-5771, Bureau of Land Management, 701 C Street, Box 13, Anchorage, Alaska 99513.

The lands in Paragraph 1 of this order were withdrawn by Public Land Order No. 850 of July 1, 1952, for use by the Department of the Army in connection with the Alaska Communication System. On March 15, 1972, the lands were further withdrawn by Public Land Order Nos. 5186 and 5187 for study and review to determine the proper classification under Section 17(d)(1) of the Alaska Native Claims Settlement Act (ANCSA).

On June 8, 1977, the Department of the Army filed a notice of intention to relinquish these lands known as Lot 3, Block 3, Federal Addition to Seward Townsite, in Seward, Alaska, containing .18 acre.

By virtue of the authority vested in the Secretary of the Interior, by Section 17(d)(1) of the ANCSA, 85 Stat. 688, 708, and pursuant to Section 204(a) of the Federal Land Policy and Management Act of 1976, 90 Stat. 2751; 43 U.S.C. 1714, it is ordered as follows:

1. Public Land Order No. 850 of July 1, 1952, is hereby revoked, and the following described lands are hereby classified as suitable for conveyance to Cook Inlet Region, Inc., in accordance with paragraph I.G. (2) of the "Terms and Conditions for Land Consolidation and Management in the Cook Inlet Area," as clarified August 31, 1976, and Section 12(b)(6) of the Act of January 2, 1976, 89 Stat. 1151:

Seward Meridian, Alaska

T. 1 S., R. 1 W.,

Lot 3, Block 3, Federal Addition to Seward Townsite.

Containing .18 acre.

2. Public Land Order Nos. 5186 and 5187 are hereby modified to delete the lands described in paragraph 1 which are now considered withdrawn for the purpose of Section 2 of the Act of January 2, 1976, and classified for the purpose of conveyance to Cook Inlet Region, Inc., as part of its entitlement under the ANCSA.

3. Subject to valid existing rights, the lands described in paragraph 1 are hereby withdrawn from all forms of appropriation under the public land laws, including selections by the State of Alaska under the Alaska Statehood Act, 72 Stat. 339, and from location and entry under the mining laws, 30 U.S.C. Ch. 2, and from leasing under the Mineral Leasing Act of February 25, 1920, as amended, 30 U.S.C. 181-287, but not from selection by Cook Inlet Region, Inc., in accordance with paragraph I.C.(2)(e) of the "Terms and Conditions for Land Consolidation and Management in the Cook Inlet Area," as clarified August 31, 1976, and Section 12(b)(6) of the Act of January 2, 1976, 89 Stat. 1151.

4. Prior to any conveyance of the lands described in paragraph 1, the lands shall be subject to administration by the Secretary of the Interior under applicable laws and regulations, and his authority to make contracts and to grant leases, permits, rights-of-way, or easements shall not be impaired by this order. Applications for leases under the Mineral Leasing Act, as amended (30 U.S.C. 181-287), will be rejected until this order is modified or the lands are appropriately classified to permit mineral leasing.

November 21, 1980.

Guy R. Martin,

Assistant Secretary of the Interior.

[FR Doc. 80-37039 Filed 11-26-80; 8:45 am]

BILLING CODE 4310-84-M

FEDERAL EMERGENCY MANAGEMENT AGENCY

44 CFR Part 9

[Docket No. FEMA Gen. 9-A]

Floodplain Management and Protection of Wetlands

AGENCY: Federal Emergency Management Agency (FEMA).

ACTION: Notice of intent not to enforce certain regulation concerning denial of flood insurance coverage.

SUMMARY: Pursuant to Pub. L. 96-369, the Federal Emergency Management Agency is temporarily suspending enforcement of 44 CFR 9.9(e)(6) and 9.11(e)(4) which concerns the denial of a new or renewed policy of flood insurance to in certain situations.

EFFECTIVE DATE: November 28, 1980.

FOR FURTHER INFORMATION CONTACT: John Scheibel, Assistant to the General Counsel for Environmental Quality and Hazard Mitigation, Federal Emergency Management Agency, Washington, DC 20472; telephone (202) 634-1990.

SUPPLEMENTARY INFORMATION: On September 9, 1980, FEMA issued 44 CFR Part 9, Floodplain Management and Protection of Wetlands (Federal Register, Vol. 45, pp. 59520-59538). Included in the regulations are two provisions which deny the availability of flood insurance under certain circumstances. Section 9.9(e)(6) states that in any case in which the Regional Director of FEMA has selected the "no action" option for a structure in a floodplain or wetland, the Federal Insurance Administration (FIA) may not provide a new or renewed contract of flood insurance for that structure. Section 9.11(e)(4) provides that where the Regional Director has been precluded from providing assistance for a new or substantially improved structure in a floodway, FIA may not provide a new or renewed policy of flood insurance for that structure.

Prior to the issuance of the rule on September 9, FEMA issued an interim rule which covered floodplain management, and measures to discourage certain development in coastal high hazard areas. This interim rule did not expressly deal with denial of flood insurance coverage as specified in the aforementioned regulation.

Subsequent to the issuance of this final rule, Congress enacted Pub. L. 96-369, which governs appropriations pending final adoption of the Appropriation Acts. This Act, by virtue of adoption temporarily of certain of the provisions of appropriation bills denies FEMA any funding to implement §§ 9.9(e)(6) and 9.11(e)(4) until FEMA has obtained notice and comment and, in no event, prior to January 31, 1981.

Pursuant to this, FEMA elsewhere in the Federal Register (see Table of Contents) of this date is republishing and requesting public comment. Pending receipt of this public comment and consideration of any change, and until January 31, 1981 at a minimum, FEMA does not intend to enforce 44 CFR 9.9(e)(6) and 9.11(e)(4).

Dated: November 18, 1980.

John W. Macy, Jr.,
Director.

[FR Doc. 80-36573 Filed 11-25-80; 8:45 am]
BILLING CODE 6718-01-M

44 CFR Part 67

[Docket No. FEMA-5818]

National Flood Insurance Program; Final Flood Elevation Determinations; Correction

AGENCY: Federal Insurance Administration, FEMA.

ACTION: Final rule; correction.

SUMMARY: This document corrects a Notice of Final Determinations of base (100-year) flood elevations for selected locations in the City of Muskegon Heights, Muskegon County, Michigan, previously published at 45 FR 62830 on September 22, 1980.

EFFECTIVE DATE: November 28, 1980.

FOR FURTHER INFORMATION CONTACT: Mr. Robert G. Chappell, National Flood Insurance Program, (202) 426-1460 or Toll Free Line (800) 424-8872 (In Alaska and Hawaii call Toll Free Line (800) 424-9080), Federal Emergency Management Agency, Washington, D.C. 20472.

SUPPLEMENTARY INFORMATION: The Federal Insurance Administrator gives notice of the correction to the Notice of Final Determinations of base (100-year) flood elevations for selected locations in the City of Muskegon Heights, Muskegon County, Michigan previously published at 45 FR 62830 on September 22, 1980, in accordance with Section 110 of the Flood Disaster Protection Act of 1973 (Pub. L. 93-234), 87 Stat. 980, which added 1363 to the National Flood Insurance Act of 1968 (Title XIII of the Housing and Urban Development Act of 1968 (Pub. L. 90-448), 42 U.S.C. 4001-4128, and 44 CFR 67).

Under the Source of Flooding of Little Black Creek, the elevation 582 feet which corresponds to the location described as, "Mouth at Mona Lake," has been changed. The elevation should be 584 feet.

The Source of Flooding of Mona Lake should be added. The location described as, "Along corporate limits," with a corresponding elevation of 584 feet is the only entry. The listing appears correctly as follows:

State	City/town/county	Source of flooding	Location	#Depth in feet above ground. *Elevation in feet (NGVD)
Michigan	(C), Muskegon Heights, Muskegon County.	Little Black Creek	Mouth at Mona Lake	*584
		Mona Lake	Along corporate limits	*584

(National Flood Insurance Act of 1968 (Title XIII of Housing and Urban Development Act of 1968), effective January 28, 1969 (33 FR 17804, November 28, 1968), as amended; 42 U.S.C. 4001-4128; Executive Order 12127, 44 FR 19367; and delegation of authority to Federal Insurance Administrator)

Issued: November 4, 1980.

Gloria M. Jimenez,
Federal Insurance Administrator.

[FR Doc. 37051 Filed 11-26-80; 8:45 am]
BILLING CODE 6718-03-M

44 CFR Part 76

[Docket No. FEMA-FIA-76]

The State Assistance Program for the National Flood Insurance Program

AGENCY: Federal Insurance Administration, Federal Emergency Management Agency.

ACTION: Final rule.

SUMMARY: This final rule sets forth a description of the State Assistance Program for the National Flood Insurance Program (NFIP). The State Assistance Program is designed to promote an intergovernmental flood hazard mitigation partnership by providing States with the opportunity to strengthen their role in NFIP flood hazard mitigation activities. This final rule defines the objectives and elements of the program, the funding approach, apportionment formula, application evaluation criteria, eligible applicants and administrative procedures.

DATE: Effective date, November 28, 1980.

FOR FURTHER INFORMATION CONTACT: Mr. Richard W. Krimm, Federal Insurance Administration, Washington, D.C. 20410 (202) 755-5561.

SUPPLEMENTARY INFORMATION: On May 19, 1980, the interim rule governing implementation of the State Assistance Program for the National Flood Insurance Program was published at 45 FR 32687 and request for comment was made.

Three comments in response to the interim rule were received by the Federal Emergency Management Agency (FEMA). One comment strongly endorsed the State Assistance Program. The two remaining comments addressed the concern that sub-state jurisdictions should be allowed to participate directly as applicants in the State Assistance Program. Specifically, one of the commentators requested that sub-state jurisdictions be allowed to participate directly if a State should decline to participate in the Program. After carefully considering these comments, FEMA has determined, for the reasons stated below, that the best interests of the Program and its constitutents would not be advanced by amending § 76.3 *Eligible Applicants*. In addition, FEMA has determined that the specific concerns addressed by the commentators may be considered and could be accommodated without a rule change.

The purpose of the State Assistance Program for the NFIP is to encourage the development and expansion of State capability in addressing NFIP and flood hazard mitigation issues. Constitutionally, the power and right to regulate land use lies with the States. Therefore, the responsibilities for adequately regulating flood-prone areas to mitigate flood losses rests with the State and its political subdivisions. An inherent part of the State's responsibility is to assure coordination of Federal, State and local flood hazard mitigation efforts. In addition, the State is responsible for providing its local governments with assistance in developing adequate measures to regulate flood-prone areas. Part of the mitigation mission of FEMA is to encourage States to develop the kinds of expertise needed to meet their responsibilities.

The State Assistance Program has been designed to focus on each State as the primary coordinating body for NFIP flood hazard mitigation activities. This approach takes into account that there are other providers of flood hazard mitigation services within a State. The Program's structure, however, is designed to assure that one coordinating body, the State Coordinating Agency acting on behalf of the governor to coordinate NFIP activities, is responsible for adequately addressing the needs of the State and its communities, for maximizing the use of existing and new flood hazard mitigation services and for preventing duplication of effort within the State.

States are specifically designated as the eligible recipients of State Assistance Program funds. Each State is responsible for developing an application which adequately addresses the needs of the State and its communities and which is consistent with the guidelines for the State Assistance Program. All States are encouraged to participate regardless of their present level of involvement in the NFIP and flood hazard mitigation. Because States are the designated recipients of State Assistance Program funds, sub-state jurisdictions and local governments have a responsibility to apprise the State of their needs and concerns so that the State may best address these needs in its flood hazard mitigation program.

The State Assistance Program has been developed to aid in fulfilling the mitigation mission of FEMA. FEMA was formed to focus the Federal hazard mitigation effort in one agency. A high priority within FEMA is flood hazard mitigation. The Federal Insurance Administration (FIA) has the responsibility within FEMA for identifying the Nation's flood plains and encouraging State and local governments to adopt flood hazard mitigation measures in order to reduce flood hazards, to prevent losses of life and property, and to reduce the spiralling costs associated with flood damage. Part of this responsibility involves promoting a working understanding of the objectives of the National Flood Insurance Program (NFIP) and the concepts and methods of flood hazard mitigation. To address this responsibility, FEMA provides general and technical assistance to communities intended to increase capabilities in implementing and administering flood hazard mitigation programs under the NFIP. To continue these efforts in the face of the increasing number of communities participating in the NFIP's Regular Program, intensified assistance demands must be met.

States are in a key position to support NFIP activities and to assist FEMA in addressing intensified assistance demands. The National Flood Insurance Program's Rules and Regulations (44 CFR Part 59, et seq.) outline functions which States may undertake to increase State and local flood hazard mitigation capabilities. Section 60.25 groups these functions into three broad areas: development of a planning and legislative framework for local flood plain management; coordination of Federal, State and local aspects of the Program; and, provision of general and technical assistance to local officials.

FEMA recognizes that State capacity to deal effectively with these areas and to shape meaningful intergovernmental cooperation is essential to the ultimate success of the NFIP. In order to be responsive to the needs of these States and their local communities, the FIA has developed the State Assistance Program to encourage a Federal/State partnership to achieve the NFIP's ultimate objectives of reducing loss of life and property due to flooding.

FEMA has determined that State Assistance Program applications are subject to State and area-wide clearinghouses review pursuant to procedures in Part I, Attachment A of OMB Circular No. A-95 (Revised).

FEMA has determined that an environmental impact statement is not needed for this program. A copy of the finding of no significant impact is available for inspection at the above address.

This rule is in consonance with the President's Memorandum of November 16, 1979, and does not impose an unnecessary burden on the small business sector.

Accordingly, the interim rule published at 45 FR 32687 hereby becomes final Part 76 of Title 44, Chapter 1, Subchapter B, Code of

Federal Regulations. The final Part 76 is published in its entirety with minor modifications as follows:

PART 76—STATE ASSISTANCE PROGRAM FOR THE NATIONAL FLOOD INSURANCE PROGRAM

Sec.
76.1 Purpose.
76.2 Description of program.
76.3 Eligible applicants.
76.4 Administrative procedures.
76.5 General provision for cooperative agreement.
76.6 Ineligible tasks.

Authority: The National Flood Insurance Act of 1968 and the Flood Disaster Protection Act 1973, 42 U.S.C. 4001 et seq.; Reorganization Plan No. 3 of 1978, 43 FR 41943; Executive Order 12127, effective April 1, 1979, 44 FR 19367.

§ 76.1 Purpose.

(a) The State Assistance Program is designed to promote an intergovernmental flood hazard mitigation partnership by providing States with the opportunity to strengthen their role in NFIP flood hazard mitigation activities. The Program will provide individual States an opportunity to complement NFIP activities by developing, implementing, and evaluating approaches to accomplish NFIP objectives through State programs. It is intended that each State undertake activities consistent with its demonstrated capability in NFIP and flood hazard mitigation activities. The Program is designed to increase existing State capabilities as well as develop new ones. In turn, States will assist in increasing their communities' capabilities to develop, implement, and administer flood hazard mitigation measures.

(b) Adequate State participation in NFIP coordination and flood hazard mitigation activities is one of the best means available to ensure that the NFIP is effectively implemented at the local level. As more communities are converted to the Regular Program, greater demands are placed on States to assist their local communities in meeting NFIP requirements. Increased State involvement is necessary to help ensure the proper implementation and administration of NFIP flood plain management standards at the local level. Through the State Assistance Program, FEMA, in concert with individual States, will be able to provide quality community assistance.

§ 76.2 Description of Program.

The State Assistance Program is designed for all States which submit acceptable applications regardless of their present level of involvement or degree of expertise in NFIP and flood hazard mitigation activities. It is structured to recognize the fact that States have individual needs and different levels of sophistication in dealing with the NFIP. Thus, the State Assistance Program allows each State the flexibility necessary to develop its application to accommodate the unique characteristics of the State and its communities, and allows each State to undertake an appropriate level of effort.

(a) *Program Elements.* The State Assistance Program has been designed around three Program Elements: *Assessment, General Assistance and Public Information,* and *Community Services;* each encompassing its own general objective. Each objective for the State's project (the "Project Objective") chosen by the State shall be derived from one of the three general objectives defined under the Program Elements. The State shall then choose tasks that meet its chosen Project Objectives. The Program Elements are structured in order of increased levels of capability needed to accomplish their tasks. *Assessment* tasks demand the least capability; *Community Services* tasks demand the most capability. The State shall choose objectives and tasks from the Program Elements that are consistent with its demonstrated capability and develop a project designed to provide a foundation upon which to progress towards Program Elements requiring higher capabilities. Accomplishing the objectives of the Program Elements requiring less capability is a prerequisite for choosing elements requiring higher capability. A State's project may contain a mix of tasks chosen from among the different elements, provided the State "qualifies" for each element. In delineating a project, States shall choose Project Objectives and corresponding tasks that are derived from the following Program Elements:

(1) *Assessment.* The general objective of the *Assessment* element is to provide a State with the opportunity to examine and evaluate current State and local NFIP and flood hazard mitigation activities. A plan designed to expand the State's role in NFIP coordination and flood hazard mitigation activities will result. Its implementation will become the basis for future State Assistance Program funding. Generally, this element is designed for States which have not developed a formal State-wide hazard mitigation program and have been minimally involved in NFIP activities.

(2) *General Assistance and Public Information.* The general objective of the *General Assistance and Public Information* element is to provide a State with the opportunity to develop a Statewide information base and coordination network. Under this element States will promote an increased understanding of the NFIP and its concepts and provisions, develop information dissemination and retrieval systems, and create approaches to maximize the coordinated use of Federal and State resources for flood hazard mitigation.

(3) *Community Services.* The general objective of the *Community* Services element is to provide States with an opportunity to work closely with local government officials in the mechanics of implementing and administering flood hazard mitigation programs. The tasks are designed for States which have already demonstrated a leadership role through strong State flood hazard mitigation laws, programs, and policies.

(b) *Funding Approach.* Each State will be provide a target funding figure which is based on an objective formula. Each State will then develop an application using the target figure to guide the scope of work. Both the scope of work and the funding figure provided to FEMA will be subject to negotiation. To be funded, each application must provide for new or substantially expanded activities. The State Assistance Program is not intended to provide funds for on-going state activities in related areas of planning or technical assistance. Furthermore, any subcontracting must be justified as to how it meets the objectives of the Program.

(1) *Apportionment Formula.* Each State will be targeted for an amount of assistance funds determined by an objective formula. An apportionment formula has been developed to guarantee a fair share of the Program's funds to each State interested in assistance. The formula weighs data for each State reflecting the magnitude of lives at risk to flood hazards, the extent of flood hazard within communities, development pressures and historical flood damage.

(2) *Formula Factors.* The four factors used to derive a percentage of the total State Assistance Program's fiscal year funds for each State include: Population in Special Flood Hazard Areas; Number of Communities Participating in the Regular Program of the National Flood Insurance Program; Total Increase in Households from Census Bureau Data; and, Flood Damages by National Flood Insurance Program Flood Insurance Claims. The first factor, Population in Special Flood Hazard Areas, reflects the magnitude of lives at risk in flood hazard areas in each State. The second

factor, Number of Communities Participating in the Regular Program, relates to priorities established by FEMA Regional Offices for flood hazard mapping purposes. Study priorities generally are based on the severity of flooding and damage potential in each community. The third factor, Total Increase in Households, indicates which States are experiencing increasing development pressures which may increase flood risks. The fourth factor, Flood Damage by National Flood Insurance Program Flood Insurance Claims, weighs the relative historical flood damage sustained by each States. All factors are weighted equally.

(c) *Application Evaluation Criteria.* All State applications will be evaluated as to how well they meet the following critera:

(1) *Objectives expressed*—specific and clearly stated objectives which relate to the national objectives of the State Assistance Program;

(2) *Needs*—explanation and understanding of the needs to be addressed by the tasks;

(3) *Tasks defined*—clear and cogent definitions of the tasks to be undertaken;

(4) *Implementation*—description of how these tasks will be accomplished, the approaches used to achieve the objectives, and the results, products and benefits expected to be derived from each task;

(5) *Coordination*—explanation of a plan of coordination with FEMA programs and offices, other federal agencies and other state agencies and programs;

(6) *Capacity*—demonstration of an acceptable level of performance in dealing with the NFIP to undertake more sophisticated tasks covered in the *General Assistance and Public Information* and *Community Services* elements.

(7) *Sustainability*—demonstration of the extent to which a state will be able to integrate NFIP standards into the overall framework of state and community planning and development activities to achieve maximum sustainability.

(8) *Consistency*—with FEMA programs and policies, particularly the NFIP.

(9) *State Evaluation* component—definition of an evaluation system for the State's project which includes:

(i) Clearly stated *objectives.*

(ii) *Tasks* to be undertaken.

(iii) *Performance indicators* (quantifiable expressions of the project objectives).

(iv) *Performance standards* (desired level of achievement for a performance indicator.

(v) *Data sources* (base from which information about performance indicators can be obtained).

(vi) *Narrative comments* addressing what other impacts the project had, problems encountered, the overall success of the project, etc.

(10) *Organizational Qualifications*—current and previous experience in related projects of comparable scope, preferably demonstrated knowledge in dealing with the NFIP.

(11) *Project Management and Workplan*—demonstration of an appropriate project management and work plan.

(d) *Supplemental Projects.*—(1) *General.* Each State's application for the target amount of funding may contain a supplement proposing innovative tasks involving an additional level of effort than that proposed in the principal application and requesting an additional level of funding. The task(s) proposed in the supplemental application must be related in scope to the effort proposed in the principal application. An innovative task may take any of several forms. It may be a product, process, an organizational arrangement or technique. Each innovative task should encompass a concept that is untried, unique, and/or advances the state of the art of flood hazard mitigation. Proposed tasks which have been undertaken before or are in use at the present may be considered for demonstration if the application identifies and addresses the question of the special nature or circumstances surrounding the proposed task which would warrant its consideration for funding as a supplemental project.

(2) *Application Procedure.* Requests for funding of supplemental tasks must be identified separately as an addendum to the principal application for the target amount of funding. The supplemental application must be submitted concurrently with the principal application. In addition, the supplemental application must include the items required in 76.4(c)(3) iii–viii, discussed below, which constitutes the documentation for the supplemental request. The supplemental application will be evaluated separately from the principal application. All requests for supplemental funding of tasks will be presented to the Federal Insurance Administrator at one time so that priorities may be weighed and funds may best be distributed.

(3) *Review Criteria.* Each task proposed for supplemental funding must be justified specifically as to how it meets the following criteria:

(i) The unique capabilities, related experiences, facilities or techniques and the commitment which the applicant possesses and offers for achieving the objectives of the task.

(ii) The extent to which the identified problem is common to a substantial number of States and the proposed approach can be adopted and replicated in a number of other States.

(iii) The overall technical merit of the proposed tasks including the specific impacts of the innovation.

(iv) The availability of supplemental funds for innovative tasks in light of competing needs.

§ 76.3 Eligible applicants.

Each State, the District of Columbia, Puerto Rico, the Virgin Islands and Guam are eligible to participate in the State Assistance Program. The Governor of each State and representative of the District of Columbia, Puerto Rico, the Virgin Islands and Guam have been requested by letter to designate a lead agency to coordinate projects under the State Assistance Program and to receive a Request for Application for the State Assistance Program. The designated lead agency will be considered the State Coordinating Agency for purposes of the National Flood Insurance Program.

§ 76.4 Administrative procedures.

(a) *Size of award.* The amount of each award will be determined by the objective apportionment formula set forth in 76.2(b) above. Each applicant should, therefore, submit an application within the range of its target amount derived from the apportionment formula which will be provided to each applicant in the Request for Application letter.

(b) *Project period.* The typical project period will be twelve months.

(c) *Submission procedures.* Each applicant shall comply with the following submission procedures:

(1) *Issuance of Request for Application.* Each designated State agency will receive a Request for Application package from the State's respective Federal Emergency Management Agency Regional Director.

(2) *How to submit.* Each State shall submit the original application and three copies to its respective Federal Emergency Management Agency Regional Office.

(3) *Application package.* The application package for the State Assistance Program shall consist of the following:

(i) A letter of transmittal signed by the chief executive officer of the State or the designated State agency.

(ii) A copy of the Agreement Articles for Cooperative Agreement.

(iii) Standard Form 424, Federal Assistance, prescribed by OMB Circular No. A-102. (Non-construction, long-form)

(iv) A detailed Program Narrative Statement developed according to the Special Instructions provided as part of the Request for Application package provided to the States.

(v) Budget information on OMB Form 80-R0186.

(vi) Standard Form 270 "Request for Advance or Reimbursement," as required by OMB Circular A-102 and FEMA General Provisions for Cooperative Agreements.

(vii) A copy of A-95 review comments or documentation of no comment and full review period.

(viii) A copy of Assurances as required by the FEMA General Provisions for Cooperative Agreement (provided to each State as part of the Request for Application package).

(ix) Any other information transmitted in the Request for Application which is requested as part of the application package.

(d) *Reporting requirements.*—(1) *Project Performance Reporting Requirements.* Each State shall submit a narrative evaluation of its level of achievement of project objectives. Each State shall report actual levels of performance standards achieved for project objectives against levels expressed by the State as desirable in its application. In addition, each State shall compare percentage of tasks accomplished against percentages projected for each month in the State's application. These narrative reports shall be submitted at intervals specified in the Agreement Articles for Cooperative Agreement.

(2) *Financial Reporting Requirements.*

(i) Standard Form 270 "Request for Advance or Reimbursement" is the voucher form to be submitted for all bills for reimbursement.

(ii) Standard Form 272 "Federal Cash Transactions Report" must be submitted each reporting period.

(iii) Standard Form 269 "Financial Status Report" must be submitted each reporting period.

(iv) A narrative report projecting the percentage of cost expanded per task by month must be submitted each reporting period.

(3) *Project Completion Reporting Requirements.* At the conclusion of the project the State must submit the following:

(i) Final Standard Forms 272 and 269.

(ii) A narrative report which includes an analysis of the project's success in achieving the Project Objectives.

(e) *Agreement Articles for Cooperative Agreement under the State Assistance Program.* The Agreement Articles shall be the basic terms to which the State and FEMA agree. The Agreement Articles shall become part of the Cooperative Agreement.

§ 76.6 General provisions for cooperative agreement.

The legal funding instrument for the State Assistance Program for the National Flood Insurance Program shall be cooperative agreement. All States will be required to comply with FEMA General Provisions for Cooperative Agreement. The General Provisions for Cooperative Agreement shall be provided to the States as part of the Request for Application Package. The General Provisions shall become part of the Cooperative Agreement.

§ 76.6 Ineligible tasks.

The following is a list of tasks which are ineligible tasks. This list of examples of ineligible tasks is merely illustrative and does not constitute a list of all ineligible tasks.

(a) *Public works, facilities and site or other improvement.* The general rule is that public works, facilities and site or other improvements are ineligible to be acquired, constructed, reconstructed, rehabilitated or installed.

(b) *Purchase of equipment.* The purchase of equipment is generally ineligible.

(c) *Analysis of NFIP or its products.* Tasks choices in no way analyze or recommend changes to the NFIP or its products. For example, proposed tasks shall not duplicate or potentially conflict with hydrologic and hydraulic engineering activities performed by the Federal Insurance Administration.

(d) *Flood Insurance Studies.* Flood Insurance Studies shall not be conducted under the State Assistance Program.

(e) Any task which is not within the general scope of the State Assistance Program's objectives.

(Catalog of Federal Domestic Assistance Program Number: 83.103—State Assistance Program for the National Flood Insurance Program)

Issued: November 20, 1980.

Gloria M. Jimenez,

Federal Insurance Administrator.

[FR Doc. 80-37049 Filed 11-26-80; 8:45 am]

BILLING CODE 6718-01-M

FEDERAL MARITIME COMMISSION

46 CFR Part 524

[General Order 23, Revised; Docket No. 80-34]

Exemption of Certain Agreements From the Requirements of Section 15, Shipping Act, 1916

AGENCY: Federal Maritime Commission.

ACTION: Final rule.

SUMMARY: The Federal Maritime Commission exempts from the filing and approval requirements of section 15 of the Shipping Act, 1916 (46 U.S.C. 814) non-exclusive equipment interchange agreements between common carriers by water. This exemption eliminates unnecessary regulation while resulting neither in unjust discrimination nor detriment to commerce.

EFFECTIVE DATE: November 28, 1980.

FOR FURTHER INFORMATION CONTACT: Francis C. Hurney, Secretary, Federal Maritime Commission, Room 11101, Washington, D.C. 20573, (202) 523-5725.

SUPPLEMENTARY INFORMATION:

On May 8, 1980, the Commission instituted this proceeding to exempt non-exclusive equipment interchange agreements from the approval requirements of section 15 of the Shipping Act, 1916 (45 FR 35368).

Section 35 of that Act (46 U.S.C. 833a) provides that the Commission, upon application or on its own motion, may by order or rule exempt any class of agreements between persons subject to the Act, or any specified activity of such persons from any requirements of the Act, where it finds that such exemption will not impair effective regulation by the Commission, be unjustly discriminatory, or be detrimental to commerce.

Equipment interchange agreements on file with the Commission generally fall within these categories:

(1) Container, chassis, and related equipment interchange agreements;

(2) Agreements involving the management of the equipment as well as the exchange of containers, chassis, and related equipment;

(3) Agreements covering only the repair and maintenance of containers, chassis, and related equipment; and

(4) Interchange of LASH/SEABEE barges.

These types of agreements are generally approved by the Commission.

Except as hereafter noted, commentators supported the rule on principle. Some commentators argued, however, that the advance filing of agreements for informational purposes

substantially defeats the objectives of the proposal. They contend that the advance filing requirement is burdensome in terms of carriers' needs to act quickly to meet operational requirements as they occur.

One carrier urged that the exemption be expanded to include agreements between carriers and "other persons" subject to the Shipping Act to recognize the possible involvement of a terminal operator in routine equipment interchange operations. In addition, it was suggested that the format provision be deleted because it is optional except for the independent agent requirement which it believes is inappropriate, unnecessary, and commercially frustrating. This carrier would also include loaded, as well as empty containers, within the exemption.

Another carrier requests the Commission to continue full section 15 scrutiny over these agreements because the "art" of equipment interchange is presently unsettled due to changes in railroad procedures for repositioning equipment which may substantially increase costs to water carriers. Accordingly, it is recommended that the matter be postponed pending inquiry into the changed competitive circumstances brought about by railroad repositioning plan modifications and their impact upon ocean carriers.

A port authority opposed the exemption because of concerns that such agreements, if exempted, could provide a means of discriminating between ports, shippers, and classes of traffic or commodities by controlling the availability of equipment or by diverting equipment to larger ports, favored shippers, or higher revenue yielding cargo. As a minimum, the port authority requests assurances from the Commission that the anti-discriminatory remedies of sections 16, 17, and 22 of the Shipping Act will continue to be available.

Based upon the comments, the Commission has decided to exempt equipment interchange agreements, but without the advance filing, the independent agent, and format requirements.

With respect to the suggestions to include "other persons" within the scope of the exemption and to extend the exemption to loaded containers, the Commission will study those suggestions further since it cannot now gauge the impact of the proposals and since they were not noticed for comment.

The proposal to defer the rule is not persuasive. There is a demonstrable justification for the exemption now, and if conditions change as a result of railroad practices or other factors, the Commission can readily readdress the situation.

Concerns that the exemption may be used in a discriminatory manner will be met by specifically noting the continuing availability of the Shipping Act's anti-discrimination provisions. The action here affects section 15 requirements only and all other provisions of the Act will remain fully applicable.

Finally, a clarifying change has been made to the existing definition of nonexclusive transshipment agreemment to indicate that a through *route* and not a through *rate* is the substance of such an agreement. This exemption, as modified, will not substantially impair effective Commission regulation of common carrier practices, result in unjust discrimination, or be detrimental to commerce.

Now, therefore, pursuant to sections 15, 35, and 43 of the Shipping Act, 1916 (46 U.S.C. 814, 833a, and 841a) it is ordered, That effective upon publication in the Federal Register, Title 46, CFR Part 524 is revised to read as follows: No changes have been made to § 524.1. Former §§ 524.3, 524.4, and 524 5 have been redesignated §§ 524.4, 524.5 and 524.6 respectively. The section title of former 524.3 (now 524.4) has been revised as indicated below. The Table of Contents, and § 524.2 are revised, and new §§ 524.3 and 524.7 are added to read as set forth below.

PART 524—EXEMPTION OF CERTAIN AGREEMENTS FROM THE REQUIREMENTS OF SECTION 15, SHIPPING ACT, 1916

Sec.

524.1 Statement of policy and purpose
524.2 Definitions.
524.3 Exemption of agreements.
524.4 Conditions for exemption of transshipment agreements.
524.5 Form of connecting carrier agreements.
524.6 Termination of approved transshipment agreements.
524.7 Optional Section 15 approval.

Authority: Secs. 15, 35, 43 of the Shipping Act of 1916, 39 Stat. 733 (46 U.S.C. 814, 833a, and 841a).

§ 524.1 Statement of policy and purpose.

[Same]

§ 524.2 Definitions.

(a) A nonexclusive transshipment agreement for the purpose of this Part is an agreement between a carrier serving a port of origin and a carrier serving a port of destination to establish a through route between such ports via an intermediate port at which the cargo is transferred, which agreement does not prohibit either carrier from entering into similar agreements with other carriers.

(b) Nonexclusive equipment interchange agreement is an agreement between two or more common carriers by water for the exchange of empty containers, chassis, empty LASH/SEABEE barges, and related equipment which agreement does not prohibit a carrier from entering into similar agreements with other carriers, and which provides only for transportation of the equipment as required, payment, management of the logistics of transferring, handling, and positioning equipment, use, repair and maintenance, damages, and liability incidental to the interchange of equipment, and no other subject.

§ 524.3 Exemption of agreements.

Agreements defined § 524.2 shall be exempt from the provisions of section 15, provided, in the case of a nonexclusive transshipment agreement, the conditions contained in § 524.4 and the form requirements of § 524.5 are met.

§ 524.4 Conditions for exemption of transshipment agreements.

[Same as present § 524.3]

§ 524.5 Form of connecting carrier agreements.

[Same as present § 524.4]

§ 524.6 Termination of approved transshipment agreements.

[Same as present § 524.5]

§ 524.7 Optional section 15 approval.

Notwithstanding the provisions of this section, persons who desire approval of agreements otherwise exempt under this Part may petition the Commission for section 15 determination in accordance with Part 522.

Secs. 15, 35, 43 of the Shipping Act of 1916, 39 Stat. 733 (46 U.S.C. 814, 833 and 841a).

By the Commission.

Francis C. Hurney,

Secretary.

[FR Doc. 80-36044 Filed 11-26-80; 8:45 am]
BILLING CODE 6730-01-M

DEPARTMENT OF THE INTERIOR

Fish and Wildlife Service

50 CFR Part 32

Hunting; Revocation of Anahuac Migratory Bird Closed Area, Texas

AGENCY: Fish and Wildlife Service, Interior.

ACTION: Final rule.

SUMMARY: This rule rescinds the order of the Secretary of the Interior which closed certain submerged shore lands and waters adjacent to Anahuac National Wildlife Refuge, Texas, to the hunting of migratory birds. It has been determined that the closing order did not accomplish its objectives of aiding the administration and increasing the effectiveness of the refuge. The effect of this proposed rulemaking will be to reopen the 1,180 acre area to the hunting of migratory birds.

EFFECTIVE DATE: December 29, 1980.

FOR FURTHER INFORMATION CONTACT: Ronald L. Fowler, Division of Refuge Management, U.S. Fish and Wildlife Service, 18th and C Streets, NW., Washington, D.C. 20240. Telephone 202-343-4305.

SUPPLEMENTARY INFORMATION: Ronald L. Fowler is also the primary author of this final rule. The Anahuac Migratory Waterfowl Closed Area in the East Bay portion of Galveston Bay, Texas, was established to aid in the administration of the Anahuac National Wildlife Refuge and to increase the effectiveness of the refuge. On October 13, 1964, approximately 1,180 acres in the East Bay portion of Galveston Bay were designated as a closed area in which pursuing, hunting, taking, capturing, or killing of migratory birds, or attempting to take, capture, or kill migratory birds is not permitted (29 FR 14075). The closure did not accomplish the desired objectives of aiding the administration and increasing the effectiveness of the refuge. Historically East Bay supported extensive beds of wigeon grass. Siltation from cultivated lands probably accelerated after channelization of Oyster Bayou in 1955, and the resultant turbidity prevented growth of submerged aquatics. Fish, shrimp, and razor and mud clams remain as the important waterfowl foods in East Bay. Combined use by all waterfowl, however, rarely exceeds one bird per acre. Surface-feeding ducks make intermittent use of the shallows and exposed tidal edges near the shore. Numbers rarely exceed a few hundred birds along a 6.5 mile stretch of shoreline. Prior to establishment of the Anahuac National Wildlife Refuge, it was a common occurrence for waterfowl to seek open water as a place to rest during periods of heavy gun pressure. This pattern of waterfowl behavior was apparently altered by available sanctuary within the refuge which is not open to hunting. The moderate use by waterfowl gradually declined as birds became re-established in protected habitat inland on the refuge. An increase in commercial and sport fishing boat traffic paralleled the decline in waterfowl use. Since the closing order did not regulate boat traffic, it was not effective in preventing waterfowl disturbance.

Rescinding the closing order will have no effect upon the local economy or on the effectiveness of the refuge. The closure of East Bay did not achieve its objectives and changing conditions do not provide new reasons to continue the closure. The weight of evidence supports the conclusion that the closing order has not affected the use of East Bay by migratory birds.

On July 14, 1980, a notice of proposed rulemaking was published [45 FR 47174]. The proposed rule would amend 50 CFR 32.4 by the deletion of Anahuac Migratory Bird Closed Area, Texas, from the list of areas closed to hunting. The public was provided a 30-day comment period and was advised that pursuant to the requirements of Section 102(2)(C) of the National Environmental Policy Act of 1969 [42 U.S.C. 4332(2)(C)] an environmental assessment had been prepared on this proposal. No comments were received.

An environmental assessment on the revocation is available for public inspection and copying at Room 2341, Department of the Interior, 18th and C Streets NW., Washington, D.C. 20240, or by mail addressing the Director at the address given above. On the basis of this assessment, the Director has determined that this rulemaking does not constitute a major federal action significantly affecting the human environment. The Department of the Interior has determined that this document is not a significant rule and does not require a regulatory analysis under Executive Order 12044, and 43 CFR Part 14.

Accordingly after consideration of all relevant facts, the Secretarial Order establishing the Anahuac Migratory Bird Closed Area, Texas, is rescinded, and it is deleted from the list of areas closed to hunting in 50 CFR 32.4.

(16 U.S.C. 704)

Dated: November 19, 1980.

Robert S. Cook,

Acting Director, U.S. Fish and Wildlife Service.

[FR Doc. 80-37065 Filed 11-26-80; 8:45 am]

BILLING CODE 4310-55-M

---

50 CFR Part 33

Sport Fishing; National Wildlife Refuges in California

AGENCY: Fish and Wildlife Service, Interior.

ACTION: Special regulations.

SUMMARY: The Director has determined that the opening to fishing of certain National Widlife Refuges in California is compatible with the objectives for which these areas were established, will utilize a renewable natural resource, and will provide additional recreational opportunity to the public. This document established special regulations effective for the upcoming fishing season.

EFFECTIVE DATES: January 1, 1981 through December 31, 1981.

ADDRESSES: Contact the Refuge Manager at the address and/or telephone number listed below in the body of the Special Regulations.

FOR FURTHER INFORMATION CONTACT: William D. Sweeney, Area Manager, U.S. Fish and Wildlife Service, 2800 Cottage Way, Room E-2740, Sacramento, California 95825, telephone: FTS 468-4664, Commercial (916) 484-4664.

SUPPLEMENTARY INFORMATION: Fishing is permitted on the National Widlife Refuges indicated below in accordance with 50 CFR Part 33, and the following Special Regulations. Portions of refuges which are open to fishing are designated by signs and/or delineated on maps available at refuge headquarters. No vehicle travel is permitted except on maintained roads and trails designated open to public use. Fishing shall be in accordance with all applicable State regulations subject to the following conditions:

§ 33.5 Special regulations; sport fishing; for individual wildlife refuge areas.

Colusa National Wildlife Refuge, (Headquarters: Sacramento National Wildlife Refuge, Route 1, Box 311, Willows, California 95988, (916) 934-2801.

Special Conditions: (1) The taking of frogs is permitted in the public fishing area; (2) The refuge is closed to sport fishing and the taking of frogs during the migratory waterfowl hunting season; and (3) No campfires or firearms permitted.

Delevan National Wildlife Refuge, (Headquarters: Sacramento National Wildlife Refuge, Route 1, Box 311, Willows, California 95988, (916) 934-2801.

Special Conditions: (1) The taking of frogs is permitted in the public fishing area; (2) The refuge is closed to sport fishing and the taking of frogs during the migratory waterfowl hunting season; and (3) No campfires or firearms permitted.

Modoc National Wildlife Refuge, (Headquarters: Modoc National Wildlife

Refuge, P.O. Box 1610, Alturas, California 96101, (916) 233–3572.

Special Conditions: (1) The refuge is closed to fishing during the waterfowl hunting season; and (2) The taking of frogs on refuge lands is prohibited.

Sacramento National Wildlife Refuge, Route 1, Box 311, Willows, California 95988, (916) 934–2801.

Special Conditions: (1) The taking of frogs is permitted in the public fishing area; (2) The refuge is closed to sport fishing and the taking of frogs during the migratory waterfowl hunting season; and (3) No campfires or firearms permitted.

Salton Sea National Wildlife Refuge, P.O. Box 247, Calipatria, California 92233, (714) 348–2323.

Special Condition: Fishing is permitted only on that portion of the refuge which is inundated by the Salton Sea and other refuge lands posted with public fishing signs.

San Luis National Wildlife Refuge, P.O. Box 2176, Los Banos, California 93635, (209) 826–3508.

Special Conditions: (1) Fishing permitted from sunrise to one hour after sunset; and (2) Use of boats is prohibited.

The Refuge Recreation Act of 1962 (16 U.S.C. 460k) authorizes the Secretary of the Interior to Administer such areas for public recreation as an appropriate incidental or secondary use only to the extent that it is practicable and not inconsistent with the primary objectives for which the area was established. In addition, the Refuge Recreation Act requires (1) that any recreational use permitted will not interfere with the primary purpose for which the area was established; and (2) that funds are available for the development, operation, and maintenance of the permitted forms of recreation.

The recreational use authorized by these regulations will not interfere with the primary purposes for which these National Wildlife Refuges were established. This determination is based upon consideration of, among other things, the Service's Final Environmental Statement on the Operation of the National Wildlife Refuge System published in November 1976. Funds are available for the administration of the recreational activities permitted by these regulations.

The primary author of this document is Patrick L. O'Halloran, Sacramento Area Office, telephone FTS 468–4958, Commercial (916) 484–4958.

Dated: November 19, 1980.

William D. Sweeney,

Area Manager—California, Fish and Wildlife Service.

[FR Doc. 80-37038 Filed 11-26-80; 8:45 am]

BILLING CODE 4310-55-M

Proposed Rules

Federal Register
Vol. 45, No. 231
Friday, November 28, 1980

This section of the FEDERAL REGISTER contains notices to the public of the proposed issuance of rules and regulations. The purpose of these notices is to give interested persons an opportunity to participate in the rule making prior to the adoption of the final rules.

OFFICE OF PERSONNEL MANAGEMENT

5 CFR Parts 870 and 890

Federal Employees' Group Life Insurance; and Federal Employees Health Benefits; Amendment to Clarify Coverage for Employees Hired Under Career-Related Work-Study Programs

AGENCY: Office of Personnel Management.

ACTION: Proposed rulemaking.

SUMMARY: The Office of Personnel Management proposes to revise the Federal Employees' Group Life Insurance (FEGLI) and the Federal Employees Health Benefits (FEHB) regulations to clarify that employees hired under career-related work-study programs are eligible for FEGLI and FEHB coverage if they are (1) expected to be in a pay status for at least one-third of the total period of time from the date of the first appointment to the completion of the work-study program, and (2) serving under appointments not limited to one year or less.

DATE: Comments must be received on or before January 27, 1981.

ADDRESS: Send or deliver written comments to Craig B. Pettibone, Director, Office of Pay and Benefits Policy, Compensation Group, Office of Personnel Management, Post Office Box 57, Washington, D.C. 20044.

FOR FURTHER INFORMATION CONTACT: John Ray, Issuances and Instructions Staff, (202) 632-4684.

SUPPLEMENTARY INFORMATION: Sections 8716(b) and 8913(b), title 5, United States Code, provide that the Office of Personnel Management may prescribe by regualtions the time at which and the conditions under which an employee becomes eligible for FEGLI and FEHB coverage, respectively. Existing regulations may be interpreted as requiring that an employee hired under a career-related work-study program *has been* in a pay status for not less than one-third of the total time required for completion of the program to be entitled to FEGLI and FEHB coverage (i.e., only after sufficient time has elapsed, permitting a determination that this requirement has been met). The intent of the regulations is to confer eligibility for FEGLI and FEHB coverage on such employees *if the expectation exists* that they will meet the time-in-pay-status requirement (i.e., it is not necessary to ensure through actual experience that the employee meets this qualification).

Office of Personnel Management.

JoAnn B. Platter,
Assistant Issuance System Manager.

Accordingly, the Office of Personnel Management proposes to amend Parts 870 and 890 as follows:

PART 870—REGULAR LIFE INSURANCE

(1) Section 870.202(a)(2) is revised to read as follows:

§ 870.202 Exclusions.

(a) * * *

(2) An employee whose employment is of uncertain or purely temporary duration, or who is employed for brief periods at intervals, and an employee who is expected to work less than 6 months in each year, except an employee who is employed under a cooperative work-study program of at least 1 year's duration and who is expected to be in a pay status for at least one-third of the total period of time from the date of the first appointment to the completion of the work-study program.

* * * * *

(5 U.S.C. 8716(b))

PART 890—FEDERAL EMPLOYEES HEALTH BENEFITS PROGRAM

(2) Section 890.102(c)(2) is revised to read as follows:

§ 890.102 Coverage.

* * * * *

(c) * * *

(2) An employee whose employment is of uncertain or purely temporary duration, or who is employed for brief periods at intervals, and an employee who is expected to work less than 6 months in each year, except an employee who is employed under a cooperative work-study program of at least 1 year's duration and who is expected to be in a pay status for at least one-third of the total period of time from the date of the first appointment to the completion of the work-study program.

* * * * *

(5 U.S.C. 8913(b))

[FR Doc. 80-37037 Filed 11-20-80; 8:45 am]
BILLING CODE 6325-01-M

DEPARTMENT OF AGRICULTURE

Agricultural Stabilization and Conservation Service

7 CFR Part 726

Burley Tobacco; 1981 National Marketing Quotas for Burley Tobacco

Correction

In FR Doc. 80-36125 appearing at page 77035 in the issue for Friday, November 21, 1980, make the following correction:

On page 77035, in the first column, in the *"Date"* paragraph, the comments closing date should have read "January 16, 1981".

BILLING CODE 1505-01-M

DEPARTMENT OF ENERGY

Office of Conservation and Solar Energy

10 CFR Part 430

Energy Conservation Program for Consumer Products; Public Meeting To Discuss the Department of Energy's Energy Efficiency Standards Program for Consumer Products

AGENCY: Department of Energy.

ACTION: Notice of Public Meeting.

SUMMARY: The Department of Energy (DOE) will convene a public meeting to allow opportunity for discussion on issues concerning the certification and enforcement of provisions of DOE's energy efficiency standards program for consumer products.

DATE: December 5, 1980, 9:00 a.m. until all comments are heard, or until 5:00 p.m.

ADDRESS: Room 2105, 2000 M. St. NW., Washington, D.C.

FOR FURTHER INFORMATION CONTACT: James A. Smith, U.S. Department of Energy, Consumer Products Efficiency Branch, Mail Stop GH-068, 1000 Independence Avenue SW., Washington, D.C. 20585, (202) 252-9127.

SUPPLEMENTARY INFORMATION: The Energy Policy and Conservation Act (EPCA) (Pub. L. 94–163), as amended by the National Energy Conservation Policy Act (NECPA) (Pub. L. 95–519), requires that the Department of Energy prescribe energy efficiency standards for the types of consumer products listed in EPCA, as amended by NECPA.

Standards for nine of these products were proposed by notice issued June 19, 1980 (45 FR 43976, June 30, 1980). Public hearings were held in Washington, D.C. and Chicago, Illinois over the period August 11–29, 1980. A public meeting was held on July 16, 1980, at which time answers to questions submitted for clarification of issues were provided. Public meetings were held on September 9, 1980, and October 10, 1980, concerning certain certification/enforcement aspects of the proposed rule. Now, at the request of the consumer products industry, DOE will convene a public meeting on December 5, 1980, to further discuss certification and enforcement aspects of the proposed rule, specifically: (1) the process for establishing the tolerances to be applied to verification and enforcement audit test results for the purposes for making a compliance/noncompliance determination, and (2) the framework for the creation of a Government/industry advisory group.

Public meeting procedure: Because of the importance of the Energy Conservation Program for Consumer Products, DOE wishes to receive the maximum level of public participation possible. DOE encourages attendance and participation by individuals and representatives of organizations, consumer groups, manufacturers and industry, and other Government agencies at the meeting.

DOE will make a short presentation at the outset of the reasons for convening the public meeting. DOE will then accept oral comments limited to a time which will be set in light of the number of persons who request to speak. Persons wishing to speak will be asked to so indicate upon registration and after the DOE presentation. The official conducting the meeting will accept comments or questions from those attending.

A transcript of the meeting will be made, and the entire record of the meeting including the transcript will be retained by DOE and made available for inspection at the DOE Freedom of Information Office in the Forrestal Building, 1000 Independence Avenue, S.W., Washington, D.C. 20585 between the hours of 8:00 a.m. and 4:30 p.m., Monday through Friday. Any person may purchase a copy of the transcript from the transcribing reporter.

Tenative program: December 5, 1980:

Welcoming Remarks
Background
Presentations and comments by interested persons

Issued in Washington, D.C., November 21, 1980.

T. E. Stelson,
Assistant Secretary, Conservation and Solar Energy.

[FR Doc 80-37170 Filed 11-26-80 8 45 am]

BILLING CODE 6450-01-M

NATIONAL CREDIT UNION ADMINISTRATION

12 CFR Part 701

Real Estate Lending-Deregulation

AGENCY: National Credit Union Administration.

ACTION: Proposed rule.

SUMMARY: This proposed rule would (1) eliminate the current regulations which require Federal credit unions with assets of less than $2,000,000 to obtain the prior written consent of the Administration before granting long-term real estate loans and would (2) eliminate the current regulations which limit the amount of loan origination fees a Federal credit union can assess when granting a long-term real estate loan. This action is a part of the NCUA Board's ongoing program for updating, clarifying, and simplifying existing regulations. Additionally, the NCUA Board believes that, in light of the competitive environment in which all financial institutions currently find themselves, the deregulation of loan origination fees may be needed so that Federal credit unions can competitively provide real estate loan services to their members.

DATES: Comments must be received by December 31, 1980.

ADDRESS: Send comments to Robert S. Monheit, Senior Attorney, Office of General Counsel, National Credit Union Administration, 1776 G Street, NW., Washington, D.C. 20456.

FOR FURTHER INFORMATION CONTACT: Thomas C. Buckman, Office of Examination and Insurance or John L. Culhane, Jr., Office of General Counsel, at the above address. Telephone numbers: (202) 357–1065 (Mr. Buckman) or (202) 357–1030 (Mr. Culhane).

SUPPLEMENTARY INFORMATION:

$2,000,000 Asset Limitation

Section 701.21–6(b) of the NCUA Rules and Regulations presently requires that a Federal credit union with assets of less than $2,000,000 obtain the prior written consent of the Administration in order to grant long-term real estate loans. (A long-term real estate loan is a real estate loan which has a maturity in excess of 12 years (12 CFR 701.21–6(b))). When acting on such requests the NCUA Board evaluates the following areas:

(A) Ability of the officials and employees to successfully manage a Federal credit union;

(B) Ability of the credit committee and loan officers; also any training efforts by these officials to prepare themselves for this type of lending;

(C) Liquidity position of the Federal credit union;

(D) Use of the expanded authority (i.e., an analysis of whether or not the Federal credit union has made plans to sell the long-term real estate loans to an investor); and

(E) Supervisory committee's fulfillment of its statutory requirements. 42 FR 59981 (1977).

The primary danger in small credit unions granting long-term real estate loans is that the size of the real estate loans will cause the small credit unions to have liquidity problems. As a result of liquidity problems, consumer loan programs of the small credit unions would more than likely suffer. However, this danger can be greatly minimized by prior planning on the part of the boards of directors of small credit unions. If small credit unions locate investors who will purchase their mortgage loans, the liquidity risks can be minimized and the credit unions will be in a position to bring mortgage loan services to their members.

One of the means through which small credit unions can gain access to secondary market investors is through a Credit Union Service Corporation. (A Credit Union Service Corporation is an organization incorporated under State law which is wholly-owned and controlled by credit unions and designated as such by the Administration.) 12 CFR 701.27–2 delineates the procedures to be followed by credit unions in forming credit union service corporations. Another means for small credit unions to gain access to secondary market investors is through state and local housing authorities.

Because the NCUA Board believes small credit unions can minimize the possibility of mortgage lending causing liquidity problems, the NCUA Board proposes to allow Federal credit unions with assets of less than $2,000,000 to originate mortgage loans, as long as the credit unions have a commitment from an investor to purchase the mortgage

loans. The NCUA Board would appreciate comments on whether small credit unions should be required to obtain commitments from investors before originating mortgage loans (as proposed) or whether they should simply be required to have a means of selling such loans.

Loan Origination Fees

Section 701.21–6(c)(5) restricts loan origination fees to a maximum of one-half of 1 percent of the loan amount on conventional loans and 1 percent of the loan amount in the case of an insured or guaranteed mortgage loan (12 CFR 701.21–6(c)(5)). Many credit unions have asked NCUA to deregulate this area since the regulation does not allow a credit union to recover the actual costs of making and marketing a real estate loan. There is only limited data available regarding the cost of originating mortgage loans. However, the data that is available does suggest that one-half of one percent of the loan amount is not sufficient for a credit union to recover the costs of originating and marketing a mortgage loan. (See Appendix A).

The proposed removal of the maximum amount of loan origination fees in the case of insured and guaranteed loans is consistent with NCUA's recent Statement of Interpretation and Policy (IRPS 80–10). 45 FR 71353 (1980). The maximum amount of loan origination fees that could be charged in granting an insured or guaranteed loan would be limited by the maximum amount permitted by the insuring or guaranteeing agency. NCUA believes that guarantees and insurance are used by government agencies to encourage lending for certain social or economic objectives and that Congress did not intend for Federal credit unions to be precluded from participating in government insured or guaranteed loan programs simply because of rising rates or limits pertaining to the maximum amount of loan origination fees.

Additionally, the NCUA Board believes the proposed deregulation of the loan origination fees is necessary for credit unions to take a more active role in mortgage lending and to enable credit unions to balance the effects of the action of the Depository Institutions Deregulation Committee (DIDC). The actions of the DIDC will deregulate the maximum interest rates that commercial banks, mutual savings banks, and savings and loan associations can pay on deposits. The DIDC will carry out this deregulation over a 6-year period. The actions of the DIDC will place additional pressure on the ability of credit unions to attract share capital. The NCUA Board believes that it is appropriate to also deregulate where possible the other side of the balance sheet (loans) in order that credit unions can generate the funds necessary to meet the increasing costs of attracting share capital.

NCUA believes that the effect of the proposed deregulation will be to make mortgage loans available to more credit union members. Credit unions have expressed that this deregulation is necessary for their mortgage loan programs to become cost efficient and to enable them to effectively market mortgage loans in the secondary market. Credit unions requesting the deregulation have indicated that once their mortgage programs become cost efficient, their goal is to reduce the settlement costs a home buyer must incur to complete the purchase of a home. Such goals are consistent with traditional cooperative concepts and it is in this spirit that the deregulation of § 701.21–6(c)(5) is proposed.

Executive Order No. 12044

All the steps normally followed in the development of a proposed regulation, as set out in NCUA's Final Report in Response to E.O. 12044: Improving Government Regulations, have not been complied with for the following reasons. A formal preliminary review memorandum was not necessary because the NCUA Board provided specific instructions to the staff on the drafting of the proposed regulation. In addition, a regulatory analysis was not necessary because the regulation will not result in an annual effect on the economy of $100 million or more nor will it result in a major increase in costs or expenses for all, or a significant portion of, Federal credit unions with assets under $1 million or for other financial institutions. Because of the discrepancy between the permitted loan origination fees and the cost of loan origination, the NCUA Board believes that prompt action is necessary and has therefore provided for a comment period of less than 60 days.

Appendix A

	1977	1974	1972	1969	1967
Average Conventional mortgage loan	[1]$36,200	$26,800	$26,100	$21,500	$18,300
Loan amount times one-half of 1 percent	[2]181.00	134.00	130.50	107.50	91.50
Origination expense per loan	[3]710.40	665.10	487.50	358.50	346.00
Difference	529.40	531.10	357.00	251.00	254.50

[1] Source: Federal Home Loan Bank Board Journal, Table S. 5.1-Terms on Conventional Home Mortgage Loans Made: National Averages for all Major Types of Lenders (Major types of lenders include savings and loan associations, mortgage bankers, commercial banks, and mutual savings banks. The Averages for conventional mortgage loans include newly built homes and previously occupied homes).

[2] Section 701.21-6(c)(5) of NCUA's Rules and Regulations limits loan origination fees on conventional loans to one-half of one percent, (12 CFR 701.21-6(c)(5)).

[3] Source: Operations Report No. 5 (Income and Cost for Origination and Servicing of 1 to 4 Unit Residential Loans 1977) prepared by the Mortgage Bankers Association of America, March 1979.

Rosemary Brady,

Secretary of the Board.

November 21, 1980.

(12 U.S.C. 1757, 1766, 1789)

§ 701.21–6 [Amended]

12 CFR 701.21–6 is proposed to be amended as follows:

(a) 12 CFR 701.21–6(b) is to be amended to read as follows:

* * * * *

(b) Federal credit unions with assets of $2,000,000 or more, or any other Federal credit union which has a commitment from a party to purchase mortgage loans originated under this section of the NCUA rules and regulations, may originate loans secured by first liens on residential real property, with maturities in excess of 12 years and not exceeding 30 years within the limitations of written policies adopted by the board of directors provided:

* * * * *

(b) 12 CFR 701.21–6(c)(5) is to be repealed.

[FR Doc. 80-36943 Filed 11-26-80; 8:45 am]

BILLING CODE 7535-01-M

CIVIL AERONAUTICS BOARD

14 CFR Ch. II

Improving Government Regulations; Agenda of Significant Regulations

AGENCY: Civil Aeronautics Board.

ACTION: Publication of agenda of significant rules under development or review.

SUMMARY: As part of its implementation of Executive Order 12044, *Improving Government Regulations*, the CAB publishes its semiannual Agenda of Significant Rules under Development or Review.

DATES: Adopted: November 20, 1980.

ADDRESSES: Copies of the rulemaking documents listed in this agenda can be obtained from the Distribution Section, Civil Aeronautics Board, Washington, D.C. 20428; (202) 673-5432. Each document should be identified by the designation appearing in parenthesis after the Federal Register citation.

Persons wishing to be placed on a mailing list for future editions of this agenda should send a postcard request to the Distribution Section at the above address.

FOR FURTHER INFORMATION CONTACT: About a specific rulemaking action listed in this agenda—the contact person listed below. About this agenda—Mark Schwimmer, Office of the General Counsel, Civil Aeronautics Board, 1825 Connecticut Avenue, N.W., Washington, D.C. 20428; 202-673-5442.

SUPPLEMENTARY INFORMATION: The Board is publishing this Agenda of Significant Rules under Development or Review as part of its voluntary implementation of Executive Order 12044, *Improving Government Regulations*. The Board's previous agenda appears at 45 FR 38073, June 6, 1980.

This agenda is divided into two main categories, *Rules Under Development* and *Existing Rules under Review*, and an Appendix. An action to amend an existing part of the Code of Federal Regulations is not necessarily listed as an existing rule under review. If it does not involve a reexamination of the basic policy and purpose of that part, it is listed as a rule under development. The Appendix lists rulemaking that appeared in the previous agenda and has since been completed or terminated.

For each rulemaking action listed in this agenda, the following information is set out: title; the name, office abbreviation, and telephone number of a knowledgeable Board official to contact for further information; status of the action; and description. Addresses for all contact persons are Civil Aeronautics Board, Washington, D.C. 20428. Unless otherwise noted, the legal authority for a rulemaking action is the Federal Aviation Act of 1958, as amended by the Airline Deregulation Act of 1978 and the International Air Transportation Competition Act.

None of the rulemaking included in this agenda is "major" within the meaning of E.O. 12044, and the Board does not plan to perform any formal regulatory analyses. Each rulemaking, however, undergoes an analysis of benefits, burdens, and alternatives, in a degree of detail and formality that is commensurate with the importance of the rule. The Board also retains the discretion to prepare a formal regulatory analysis on any rulemaking.

Statements in the status column that a notice or advance notice of proposed rulemaking is in preparation indicate that the staff is preparing a draft for Board action. They do not imply that the proposal will necessarily be issued, that the Board has endorsed the substance of the proposal, or that the petition (if any) prompting the rulemaking activity will necessarily be granted.

Although this agenda is intended to list all significant Board regulations that are under development or review, it is not a complete guide to all significant rulemaking activity for the 6 months until publication of the next agenda. First, new rulemaking actions may arise and be completed between now and then. Second, we may have inadvertently omitted one or more items. Any such omission shall not preclude the Board from taking action on the item, and shall not be a ground for judicial review of the rule.

Abbreviations Used in This Agenda

"Act" means the Federal Aviation Act of 1958, as amended, 49 U.S.C. 1301 *et. seq.*, including amendments made by the Deregulation Act and the International Air Transportation Competition Act, Pub. L. 96-192, 94 Stat. 35.

"Deregulation Act" means the Airline Deregulation Act of 1978, Pub. L. 95-504, 92 Stat. 1705.

"CFR" means Code of Federal Regulations.

"FR" means Federal Register.

"ANPRM" means advance notice of proposed rulemaking.

"NPRM" means notice of proposed rulemaking.

Office abbreviations:

BCP—Bureau of Consumer Protection.

BDA—Bureau of Domestic Aviation.

BIA—Bureau of International Aviation.

OEA—Office of Economic Analysis.

OGC—Office of the General Counsel.

OCR—Office of Civil Rights.

ER-, EDR-, SPR-, SPDR-, and similar designations appearing in parenthesis after a Federal Register citation are the Board's internal designations for final rules and proposed rules. Using these designations, interested persons can obtain copies of documents from the Distribution Section at the address listed above. The Distribution Section will also establish and maintain a list of persons wishing to receive copies of future agendas.

Accordingly, the Civil Aeronautics Board publishes the attached Agenda of Significant Regulations under Development or Review.

By the Civil Aeronautics Board.

Phyllis T. Kaylor,

Secretary.

Rules Under Development

Title	Contact person	Status	Description
I. Small Community Air Service Program			
1. *Procedures for compensating air carriers for losses (14 CFR Part 324).*	David Schaffer, OGC, 202-673-5442	Interim rule, 44 FR 42171, July 19, 1979 (PR-299). Request for comments on interim rule 44 FR 42171, July 19, 1979 (PDR-67, Docket 56128). Comment period closed September 17, 1979	The Board can order an airline to continue to provide essential air service to a community while the agency tries to find a replacement airline, but it must compensate the incumbent airline for any financial losses incurred in complying with the order. This rule governs proceedings for determining the compensation for the incumbent airline's losses.
2. *Determining the number of seats needed to provide essential air service (14 CFR Part 398).*	David Schaffer, OGC, 202-673-5442	Final rule, 44 FR 65584, November 14, 1979 (PS-89). Request for comments on final rule, 44 FR 65583, November 14, 1979 (PSDR-64, Docket 34650). Comment period closed January 14, 1980	Under guidelines for determining the level of essential air service for small communities, the Board first determines the number of passengers that will need to be accommodated. It then determines the number of available seats it needs to guarantee, on the assumption that the average load factor (percentage of seats filled) will be 60 to 65 percent. That figure is based on

Rules Under Development—Continued

Title	Contact person	Status	Description
			normal load factors with large aircraft. This amendment lowered that figure, to reflect the fact that with smaller aircraft a lower load factor is needed to ensure the same likelihood that no passengers will be denied a seat.
3. *Essential air service subsidy guidelines (proposed 14 CFR Part 271).*	John R. Hokanson, BDA, 202-673-5368; or David Schaffer, OGC; 202-673-5442.	NPRM in preparation	The Board provides subsidy to airlines to ensure that small communities receive essential air service at a level determined in accordance with 14 CFR Part 398. This rule would implement section 419(d) of the Act, which directs the Board to establish guidelines for computing the fair and reasonable amount of compensation necessary to guarantee that level of service.
4. *Obligation of carriers to provide adequate service at eligible points (14 CFR Part 398).*	David Schaffer, OGC, 202-673-5442	NPRM, 45 FR 67357, October 10, 1980 (PSDR-68, Docket 38807). Comment period closes December 9, 1980.	The Board has set essential air service levels under section 419 of the Act for eligible points (small communities). Some of these points are being served by air carriers that are not providing the required level of service. This rule would establish a new policy under which the Board would rely on the "adequate service" provision of section 404(a) of the Act as authority to order these carriers to provide adequate (*i.e.*, essential) service at points they now serve.
5. *Schedule listings and delays in discontinuing service (14 CFR Part 323).*	David Schaffer, OGC, 202-673-5442	NPRM, 45 FR 20117, March 27, 1980 (PDR-70, Docket 37905). Comment period closed May 27, 1980.	This rule would make two changes in the Board's regulation that requires airlines to provide notice before discontinuing certain types of air service. First, airlines would have to maintain all generally-distributed schedule listings of flights for which notice had been filed, until discontinuance is permitted by the Board. Second, airlines would have to discontinue service within 60 days after the intended date stated in the notice (unless required to serve longer by the Board) or else file a new notice of discontinuance.
II. Fares, Rates, and Tariffs			
6. *Plain English for airline/passenger contracts (proposed 14 CFR Part 255).*	Patricia J. Kennedy, BCP, 202-673-5158	NPRM, 45 FR 42629, June 25, 1980 (EDR-404, Docket 38348). Comment period closed September 3, 1980. Reply comment period closed September 23, 1980.	Contracts between airlines and their passengers are governed by tariffs, which are filed with the Board and available for inspection at airline ticket offices. Although tariffs are complicated and relatively inaccessible documents, passengers are presumed to have read them and consented to their terms and conditions. Over the past several years, many businesses have developed "plain English" contracts so that customers clearly understand what they are agreeing to. The proposed rule would apply this approach to airline/passenger contracts by prohibiting airlines from enforcing tariff provisions against passengers unless the airlines make available to passengers a "plain English" notice of the terms and conditions of the contract.
7. *Elimination of mandatory joint fares (14 CFR Part 399).*	Barry L. Molar, BDA, 202-673-5373	Petition filed in Docket 38585. NPRM in preparation.	The mandatory joint fare requirements established in the *Domestic Passenger Fare Investigation* will end by January 1, 1983, with the end of the Board's jurisdiction over domestic passenger fares. On its own initiative, and in response to a petition filed by American Airlines, the Board is considering whether to eliminate the mandatory joint fare program sooner or to phase it out.
8. *Maximum tariffs (14 CFR Parts 221, 296, 297).*	Mark S. Kahan, BDA, 202-673-5371	NPRM, 45 FR 64864, September 24, 1980 (EDR-408, Docket 38746). Comment period closes December 1, 1980.	This rule would allow airlines to file tariffs that state prices as maximum amounts instead of exact amounts, so that any price up to the maximum could be charged. The rule would also allow the payment of commissions to air freight forwarders and foreign air freight forwarders. The proposal was prompted by exemption requests from several airlines.
9. *Pre-filing tariff approval for fare reductions (14 CFR Part 221).*	Thomas Moore, BDA, 202-673-5038	NRPM, 45 FR 31411, May 13, 1980 (EDR-402/ODR-21, Docket 38147). Comment period closed June 16, 1980.	This rule would set up a procedure to minimize delay in acting on domestic passenger fare reduction proposals. If an airline filed an application for a fare decrease in the morning, the Board would take action on it the same day, and the airline could begin charging the fare the next day.
10. *International cargo rate flexibility (14 CFR Part 399).*	Mark Schwimmer, OGC, 202-673-5442	NPRM, 45 FR 3595, January 19, 1980 (PSDR-65, Docket 37444). Comment period closed April 9, 1980. Oral argument held July 15, 1980.	This rule would establish a policy of not reviewing international cargo rate changes for economic justification if the changes were below a prescribed ceiling, except in extraordinary circumstances. The ceiling would be set initially at the October 1, 1979, rate levels for general commodity rates, and would be periodically adjusted for operating cost increases.
11. *International cargo rate policy—further changes (14 CFR Part 399).*	Mark Schwimmer, OGC, 202-673-5442	ANPRM in preparation	This notice would invite comments on the broad question of what the Board's cargo rate policy should be, to advise the Board on future rulemaking or legislative proposals.

Rules Under Development—Continued

Title	Contact person	Status	Description
III. Charters			
12. *Charter flight delays (14 CFR Parts 207, 208, 212, 214).*	Mark Schwemmer, OGC 202-673-5442	NPRM, 42 FR 64905, December 29, 1977 (EDR-243 Docket 31229) Comment period closed April 14, 1978 Reply comment period closed May 15, 1978	This rule would tighten the existing rules on flight delays by U.S. charter airlines and extend those rules to passenger charter flights of all types of direct air carriers, other than air taxi operators.
13. *Review of foreign air carrier charter authority (14 CFR Parts 212, 214).*	David Schaffer, OGC, 202-673-5442	NPRM, 45 FR 2331, January 11, 1980 (EDR-394 Docket 35246) Comment period closed March 11, 1980	This rule would amend the Board's prior authorization requirements for charters by foreign air carriers. Prior approval would be required for "fifth freedom" charter flights, instead of "off-route" charters, as required under the present rules.
14. *Escrow accounting for Public Charters (14 CFR Part 380).*	David Schaffer, OGC, 202-673-5442	NPRM, 44 FR 32399 June 6 1979 (SPDR-69, Docket 35705) Comment period closed August 6, 1979	This rule would amend the escrow system for the protection of Public Charter passengers' funds, to simplify the accounting procedures and to eliminate a limitation on disbursements by the escrow bank.
15. *Registration of foreign charter operators (14 CFR Parts 211, 215, 380, 385).*	David Schaffer, OGC, 202-673-5442	NPRM, 45 FR 26084, April 17, 1980 (EDR-398/SPDR-77/ODR-20. Docket 38023) Comment period closed June 16, 1980	This rule would replace the requirement that foreign charter operators obtain a foreign air carrier permit under section 402 of the Federal Aviation Act with a simple registration requirement, to ease market entry and promote competition.
16 *Charter price flexibility (14 CFR Part 380)*	Patricia T Szrom, BDA 202-673-5088	Petition filed in Docket 28300 Petition filed in Docket 38023. NPRM in preparation.	The Board's current rules allow charter operators, in their contracts with participants, to reserve the right to increase the charter price up to 10%, as long as the increase occurs 10 or more days before departure. On its own initiative and in response to petitions filed by the American Institute for Foreign Study and the United States Tour Operators Association, the Board is considering whether to eliminate this flexibility, to retain it as is, to retain it but require increases to be cost-justified, or to increase the flexibility
17. *Registration procedures for Canadian charter air taxi operators (proposed 14 CFR Part 294).*	Ira Leibowitz, BIA, 202-673-5035, or Nancy Pitzer, BIA, 202-673-5134	NPRM in preparation	This rule would eliminate the requirement that Canadian charter air taxi operators obtain foreign air carrier permits under section 402. Instead of the extensive information normally required by 14 CFR Part 211, these carriers would merely have to register with the Board. Registration would be quicker and easier to obtain than a regular permit.
18. *Removal of limit on agent commissions for charters (14 CFR Parts 207, 208, 212, 214).*	David Schaffer, OGC, 202-673-5442	NPRM, 45 FR 26083, April 17, 1980 (EDR-397 Dockets 37969 38022) Comment period closed June 16, 1980	This rule would remove the limitation on the commission that air carriers can pay to travel agents for pro rata and single-entity charters. It would also make other changes in the rules governing those charters. It responds to a petition from the Performance Incentives Company
19. *Direct carrier responsibility for returning stranded charter passengers (14 CFR Parts 207, 208).*	David Schaffer, OGC, 202-673-5442	NPRM 45 FR 46812, July 11, 1980 (EDR-405, Docket 37169) Comment period closed September 25, 1980 Reply comment period closed October 10, 1980	This rule would make direct air carriers responsible for returning charter passengers stranded by strikes or other interruptions of their services by eliminating the *force majeure* clause from charter contracts.
20. *Using insurance policies to protect Public Charter passengers' funds (14 CFR Parts 207, 208, 212, 214, 380).*	David Schaffer, OGC, 202-673-5442	NPRM 45 FR 63590, September 25, 1980 (EDR-407/SPDR-79. Docket 36958) Comment period closes November 24, 1980 Reply comment period closes December 9, 1980	This rule would authorize insurance plans as an additional alternative to the security arrangements now permitted for Public Charter passengers' funds.
IV. Miscellaneous			
21. *Nondiscrimination on the basis of handicap (proposed 14 CFR Part 382).*	Mary Candace Fowler, BCP 202-673-5158	NPRM, 44 FR 32481 June 6 1979 (SPDR-70, Docket 34139) Comment period closed September 4, 1979 Reply comment period closed September 24 1979	This rule would prohibit unlawful discrimination against handicapped air travelers and implement section 504 of the Rehabilitation Act of 1973.
22. *Consumer protections for members of scheduled-service tour groups.*	David Schaffer, OGC, 202-673-5442	ANPRM 44 FR 42481 July 25, 1979 (SPDR-71. Docket 34797) Comment period closed October 23, 1979 Reply comment period closed November 22 1979	The Board has invited comments on whether consumer protection rules are needed for scheduled-service tours, on the Board's statutory authority to prescribe such rules, and on the form that those rules might take.
23. *Air carrier fitness (continuing fitness) (14 CFR Part 204).*	Neil G. Whitehouse, BDA, 202-673-5028	NPRM is in preparation	The Board is developing a system to monitor the continuing fitness of air carriers as required by section 401(i) of the Act.
24. *Fitness determinations for dormant carriers (14 CFR Part 204)*	Tom Smith, BDA, 202-673-5088	NPRM, 45 FR 73085, November 4, 1980 (EDR-411 Docket 38924) Comment period closes December 15, 1980 Reply comment period closes December 30, 1980	The rule would impose a 2-year limit for starting service or continuing service after a fitness determination. Carriers that did not begin service or operate within that time period would be required to resubmit fitness data and obtain reauthorization before beginning service.
25. *Zones for mail rates (proposed 14 CFR Part 233).*	Barry Molar, BDA, 202-673-5371, or Lawrence Myers, OGC, 202-673-5791	NPRM 44 FR 52246, September 7, 1979 (EDR-387/PDR-68, Docket 36497) Comment period closed November 5, 1979 Reply comment period closed November 20 1979	This rule would end the Board's current practice of prescribing fixed rates for the transportation of mail by air, and in its place establish zones for each category of mail. Each zone would be defined by maximum and minimum rates prescribed by the Board, and airlines would be free to contract with the Postal Service for the carriage of mail at any price within the zone.
26. *Reporting of air cargo traffic (14 CFR Parts 291, 296).*	Clifford M. Rand, OC, 202-673-6044	Petition filed in Docket 36544 NPRM in preparation	The Air Freight Forwarders Association has petitioned the Board to increase requirements that airlines and freight forwarders file reports of their cargo traffic, to monitor the effects of air cargo deregulation.

Rules Under Development—Continued

Title	Contact person	Status	Description
27. *Age discrimination (proposed 14 CFR Part 378).*	David Schaffer, OGC, 202-673-5442	NPRM, 44 FR 55383, September 26, 1979 (SPDR-74, Docket 36639). Comment period closed November 26, 1979. A final rule was adopted by the Board on April 10, 1980, and was forwarded to the Secretary of HHS for approval, as required by the Age Discrimination Act.	This rule will prohibit discrimination against air travelers on the basis of age and implement the Age Discrimination Act of 1975.
28. *Policy statement on preemption (14 CFR Part 399).*	Patricia Synder, OGC, 202-673-5205	Interim rule, 44 FR 9948, February 15, 1979 (PS-83). Request for comments on interim rule, 44 FR 9953, February 15, 1979 (PSDR-56, Docket 34684). Comment period closed April 16, 1979.	This rule sets out interim Board policies for regulation of intrastate routes of airlines that have interstate authority. The Board has concluded that under section 105 of the Act it, not the States, is responsible for economic regulation (or deregulation, as the case may be) of all the routes, rates, or services of any airline holding either (i) a certificate of public convenience and necessity to provide interstate air transportation, or (ii) an exemption under section 416 of the Act from the requirement for such a certificate.
29. *Insurance for air carriers (proposed 14 CFR Part 205).*	J. Kevin Kennedy, BDA, 202-673-5088; or Richard Loughlin, BIA, 202-673-5880.	NPRM, 45 FR 7566, February 4, 1980 (EDR-395, Docket 37531). Comment period closed April 15, 1980. Reply Comment period closed May 6, 1980.	This rule would establish liability insurance requirements for all U.S. and foreign direct air carriers, to protect the public against losses caused by those carriers. The rule would implement section 401(q)(1) of the Act, as added by the Deregulation Act.
30. *Dual authority (14 CFR Part 298).*	Mark Schwimmer, OGC, 202-673-5442	NPRM, 45 FR 73087, November 4, 1980 (EDR-412, Docket 38906). Comment period closes January 5, 1981. Reply comment period closes January 26, 1981.	Airlines that use only small aircraft are already exempt from many regulatory requirements of the Act. This rule would grant similar exemptions to certificated airlines (which usually operate large aircraft) for their small aircraft operations, in order to promote competition.
31. *Liberalized regulation of wet lease agreements (14 CFR Parts 207, 208, 212, 214, 399).*	Mark Schwimmer, OGC, 202-673-5442	NPRM in preparation	This rule would liberalize the restrictions on wet leases (leases of aircraft with crew) between airlines, to eliminate unnecessary barriers to competition.
32. *Employee protection program (proposed 14 CFR Part 314).*	Michael Schopf, OGC, 202-673-5234; or Steven B. Farbman, BDA, 202-673-5340.	NPRM, 45 FR 49291, July 24, 1980 (EDR-406/PSDR-72; docket 38483). Comment period closed September 8, 1980.	Section 43 of the Airline Deregulation Act of 1978 established an employee protection program. Eligible protected employees may receive monthly assistance payments form the Secretary of Labor if the Board determined that qualifying dislocation of an airline has taken place. This rule would set forth procedures for those Board determinations.
33. *Advertising of Flights as "Direct".*	Brinley H. Williams, BCP, 202-673-5937	NPRMM in preparation	This rule would prohibit airlines from advertising flights as "direct" when there is a change of aircraft.
34. *Elimination of airport notices and approved service plans (14 CFR Parts 202 and 213).*	Ann Pongracz, BIA, 202-673.5203	NPRM in preparation	The Board is reviewing the requirements that airlines file airport notices and changes in approved service plans, with a view toward eliminating them.

Existing Rules Under Review

Title	Contact person	Status	Description
35 *Format of certificates beginning January 1, 1982 (14 CFR Part 202).*	Anne W. Stockvis, BDA, 202-673-5198	NPRM in preparation	The termination of route regulation on December 31, 1981, poses questions about various provisions that are now in the carriers' certificates of public convenience and necessity and certain other problems. Among subjects under review are: maintenance of seasonal service requirements, skip-stop provisions in relation to essential air service levels, handling of temporary authority, notice requirements for carriers with dual authority, effect of termination of route regulation on Airport Development Air Program, slot allocation, and the handling of certain airport and aircraft-type restrictions and the status of carriers' section 406 subsidy eligibility.
36. *Reduction of evidence requirements for foreign air carrier permit renewals (14 CFR Part 211).*	Regis P. Milan, Jr., BIA, 202-673-5878	NPRM in preparation	Under this rule, foreign air carriers applying for rountine renewals or amendments of their permits would, if previous unopposed licensing proceedings have met certain evidentiary standards, be excused from resubmitting certain evidence whose continuing validity could be attested to.
37. *Reporting of civil aircraft charters (14 CFR Parts 217 and 241).*	Clifford M. Rand, OC, 202-673-6044	NPRM in preparation	This rule would significantly reduce the Board's charter data reporting requirements.
38. *Flexibility in charging applicable through or local fare (14 CFR 221.62).*	Mark S. Kahan, BDA, 202-673-5371	NPRM in preparation	Carriers are now required to change the applicable published through fare between a point of origin and a point of destination, even if it is higher or lower than the sum of intermediate fares. The Board is considering a rulemaking to give carriers and their agents more flexibility in charging the lowest possible fare.
39. *Ticket notices and ticket office counter signs (14 CFR Parts 221, 250, 255, 298).*	Mary Candace Fowler, BCP, 202-673-5158	NPRM, 45 FR 25817, April 16, 1980 (EDR-396, Docket 38021). Comment period closed August 15, 1980. Reply comment period closed September 3, 1980.	This rule would revise and simplify the requirements that airlines disclose certain information to consumers on passengers' tickets and counter signs. It would also consolidate those requirements in a new Part 255.
40. *Liability for lost, delayed, and damaged baggage (14 CFR Part 221).*	Joseph A. Brooks, OGC, 202-673-5442	NPRM in preparation	The Board is reviewing the current baggage liability limits and rules in the carriers' tariffs in order to determine which rules, if any, should be placed in the regulations and kept after the sunset of the Board in 1985.

Existing Rules Under Review—Continued

Title	Contact person	Status	Description
41. *Fare summaries (14 CFR Part 221a)*	David Schaffer, OGC, 202-673-5442	Petition filed in Docket 35139 Petition granted, 44 FR 57085, October 4, 1979 (Order 79-8-116).	This rule requires certificated scheduled airlines to provide concise information to the public about the various fares they offer in domestic air transportation. It is designed to provide enough information to enable consumers to make an informed choice of fare plan. Fare summaries do not seem to have received a great deal of attention from passengers, however. In response to a petition from American Airlines, the Board is reviewing this rule to decide how it might be improved, or whether it should be abolished and some other fare information requirement should be imposed. The Board has also waived the effectiveness of the rule, pending the review.
42. *Regulation of intermodal services of foreign air carriers (14 CFR Part 222).*	Joseph DiBella, BIA, 202-673-5035	NPRM, 45 FR 42318, June 17, 1980 (EDR-403, Docket 38329). Comment period closed August 22, 1980 Reply comment period closed September 22, 1980.	This rule would eliminate all Board restrictions on intermodal services performed by U.S. air carriers, and would require Statements of Authorization for intermodal services by foreign air carriers. This rule would coordinate the Board's treatment of intermodal services with the Congressional modification of the Interstate Commerce Commission's jurisdiction over such services in the Motor Carrier Act of 1980.
43. *On-time arrival standards (14 CFR Part 234).*	David Schaffer, OGC, 202-673-5442	Petition filed in Docket 27891 NPRM in preparation.	The Aviation Consumer Action Project has petitioned the Board to restate its on-time arrival standards in terms of actual-versus-scheduled *arrival* times, instead of actual-versus-scheduled *elapsed* times.
44. *Air carrier financial and statistical reporting (14 CFR Part 241).*	Clifford M. Rand, OC, 202-673-6044	NPRM in preparation	As part of a major review of its largest reporting system, the Board expects to eliminate, consolidate, and refine a substantial number of financial and statistical reporting schedules to reduce reporting burdens on all certificated air carriers. Particular emphasis will be placed on reducing the burdens of small air carriers.
45. *Commuter financial and traffic data (14 CFR Part 241, 298).*	Clifford M. Rand, OC, 202-673-6044	NPRM in preparation	This rule would modify statistical reporting requirements and impose financial reporting requirements on some commuter carriers, to assist in the administration of essential air service programs.
46. *Revision of record-retention requirements (14 CFR Part 249).*	Clifford M. Rand, OC, 202-673-6044	NPRM, 43 FR 50150, October 26, 1978 (EDR-365, Docket 33725). Comment period closed January 26, 1979	This would be the first major revision of the Board's record-retention requirements since 1957. It is designed to make them less burdensome and easier to understand and administer.
47. *Denied boarding compensation (14 CFR Part 250).*	David Schaffer, OGC, 202-673-5442	NPRM, 45 FR 30086, May 7, 1980 (EDR-400, Docket 36294) Comment period closed July 7, 1980.	Airlines are required to pay denied boarding compensation to passengers who are bumped from their flights. This rule would clarify the applicability of that requirement to extra sections of flights. The rule would also eliminate a minor exception to the requirement.
48. *Denied boarding compensation—small aircraft (14 CFR Part 250).*	Lawrence R. Krevor, BDA, 202-673-5333	ANPRM, 45 FR 31413, May 13, 1980 (EDR-401, Docket 36108). Comment period closed June 30, 1980 Reply comment period closed July 10, 1980 NPRM in preparation.	The Board has invited comments on whether, and in what form, its oversales and denied boarding rules should apply to commuter air carriers and to certificated carriers operating small (less than 60-seat) aircraft.
49. *General review of denied boarding compensation (14 CFR Part 250).*	David Graham, OEA, 202-673-6064	Review in progress	The Board is conducting a general review of the need for rules on denied boarding compensation.
50. *Smoking on airplanes (14 CFR Part 252).*	David Schaffer, OGC, 202-673-5442	A: Final rule, 44 FR 5071, January 25, 1979 (ER-1091). NPRM, 44 FR 29486, May 21, 1979 (EDR-377, Docket 29044). Editorial correction of NPRM, 44 FR 33410, June 11, 1979 (EDR-377A) Comment period closed August 20, 1979 Reply comment period closed September 19, 1979.	A: In January, 1979, the Board amended its rules on smoking aboard aircraft to provide passengers more effective protection from tobacco smoke. The new requirements include special segregation of cigar and pipe smokers, a minimum of two rows of seats in the no-smoking area for each class of service, and enough seats in no-smoking areas for all persons who wish to be seated there, with provision for expansion of those areas to meet passenger demand. In May, 1979, the Board proposed further changes, including special seating for susceptible passengers, buffer zones, and special locations for cigar and pipe smoking. Other options include a ban on cigar and pipe smoking, and prohibitions based on the type of aircraft (for example, banning smoking on planes with 30 or fewer seats) or length of flight (for example, banning smoking on all flights of less than 1 hour).
		B. NPRM 45 FR 26976, April 22, 1980 (EDR-399, Docket 36048). Comment period closed June 23, 1980	B: This rule would permit airlines to refuse to expand the no-smoking section for standby passengers and those who check in less than 5 minutes before scheduled departure.
		C Petition filed in Docket 37657, denied by Order 80-8-80	C: A petition to eliminate the smoking rule entirely was denied.
51. *Alaskan subcontract agreements (14 CFR Part 293).*	David Schaffer, OGC, 202-673-5442	NPRM in preparation	Part 293 applies to subcontract agreements involving the operation of scheduled air services by air taxi operators over Alaskan bush routes of a certificated air carrier. The Board is considering whether to revoke this rule and replace it with a simpler filing requirement.
52. *Exemption for air freight forwarders (14 CFR Part 296).*	Joyce A Snovitch, BDA, 202-673-5074	NPRM in preparation	The rule would eliminate the registration and reporting requirements applicable to air freight forwarders, and would allow such carriers to operate under a blanket exemption without having to register with the Board.
53. *Cooperative shippers associations to act as agents of direct carriers (14 CFR Parts 296 and 297).*	Joseph A. Brooks, OGC 202-673-5442	Petition for rulemaking filed in Docket 38470	Cooperative shippers associations are indirect air carriers of property. They are now allowed to become agents of their shippers, but not of direct carriers. In response to a petition, the Board is considering allowing cooperatives to act as agents of the direct carriers, to give these indirect carriers greater flexibility in providing services to their customers.

Existing Rules Under Review—Continued

Title	Contact person	Status	Description
54. *Reregistration of air taxis (14 CFR Part 298).*	David Schaffer, OGC, 202-673-5442	NPRM, 45 FR 67680, October 14, 1980 (EDR-410, Docket 38815) Comment period closes December 15, 1980.	This rule would eliminate the requirement that air taxis reregister with the Board every 2 years.
55. *Nonpublic investigations by the Bureau of Consumer Protection (14 CFR Part 305).*	J. Craig Weller, BCP, 202-673-5943	NPRM in preparation	This rule would clarify and simplify the procedures for conducting nonpublic investigations.
56. *Fuel information in certificate applications (14 CFR Parts 313 and 201).*	William J. Wagner, BIA, 202-673-5035	NPRM in preparation	To implement the goals of the Energy Policy and Conservation Act, the Board requires applicants for new operating authority to submit fuel information. This rule would eliminate that requirement in instances where it is unnecessary because the United States and a foreign country have agreed that new service is required by the public interest.
57. *Information submitted in merger applications (14 CFR Part 315).*	David Schaffer, OGC, 202-673-5442	Interim rule, 45 FR 23646, April 8, 1980 (PR-221). Request for comments on interim rule, 45 FR 47698, July 16, 1980 (PDR-71, Docket 37970). Comment period closed September 15, 1980.	This rule sets forth the information that must be submitted with a section 408 merger application. It is needed to enable the Board to meet the 6-month deadline imposed by the Act for issuing a final order or decision in a merger case.
58. *Suspension notices after January 1, 1982 (14 CFR Part 323).*	David Schaffer, OGC, 202-673-5442	NPRM in preparation	After December 31, 1981, the Act requires carriers to file termination notices only when the suspension would deprive a community of essential air service. This rule would eliminate most notices now required by Part 323 and may require a few new ones to ensure that the Board retains the capability to monitor essential service levels at eligible points.
59. *Elimination suspension notices for foreign air transportation (14 CFR Parts 323, 231).*	Patricia DePuy, BIA, 202-673-5878	NPRM in preparation	The Board is reviewing the requirements in 14 CFR Part 323 for suspension notices in foreign air transportation, which does not involve essential air service, with a view to substituting a simple increase in the number of copies of schedule changes filed pursuant to 14 CFR Part 231.
60. *Employee responsibilities and conduct (14 CFR Parts 370, 300).*	Kenneth G. Caplan, OGC, 202-673-5790	NPRM in preparation	The Board is preparing revisions of its ethics rules to reflect experience since the revision and to conform to the Ethics in Government Act, Pub. L. 95-521.
61. *Protection of charter participants' funds (14 CFR Parts 371, 372a, 373, 378, 378a, and others).*	Brinley Williams, BCP, 202-673-5937	A. NPRM, 42 FR 61408, December 2,1977 (SPDR-63, Docket 31735). Comment period closed June 30, 1978. Reply comment period closed July 31, 1978.	A. The Board has been reviewing the patchwork of redundant, and sometimes inconsistent, regulations for the protection of charter participants' funds, with a view towards establishing a simpler, uniform set of requirements. The redundancies and inconsistencies were largely eliminated when five different charter regulations were replaced by the Public Charter rule, 14 CFR Part 380.
		B. NPRM in preparation	B. This rule would increase the period of time from 60 to 120 days for tour participants to file claims against a charter operator's bond. By the time many people have found the operator against whom they can file, 60 days have passed.
		C. ANPRM in preparation	C. This rule would establish a trust fund in place of existing financial security provisions for the protection of charter participant funds.
62. *Navigation of foreign civil aircraft (14 CFR Part 375).*	George Wellington, BIA, 202-673-5878	NPRM in preparation	The Board is reviewing its regulations governing the navigation of foreign civil aircraft within the United States. The review will focus on simplifying and clarifying the procedures to be followed in obtaining operating authority, and on ensuring that conditions imposed on such operations satisfactorily serve the public interest.
63. *Nondiscrimination in Federally assisted programs of the Board (14 CFR Part 379).*	Kenneth G. Caplan, OGC, 202-673-5790; or Shawn D. Land, OCR, 202-673-5544.	NPRM in preparation	The Board is reviewing its rules that implement Title VI of the Civil Rights Act of 1964, in response to suggestions from the Department of Justice.
64. *Elimination of prospectus filing for Public Charters (14 CFR Part 380).*	Mark Schwimmer, OGC, 202-673-5442	NPRM in preparation	Currently a charter operator cannot begin to market a Public Charter until at least 10 days after it files a prospectus with the Board. If the Board disapproves the prospectus, the delay can be longer. The prospectus must include a flight schedule and tour itinerary (if any). It must also include certifications that the charter operator has entered into a charter contract with an airline and made certain arrangements for the protection of passengers' funds. This rule would replace the prospectus-filing requirement with a simple registration requirement.
65. *Change in license and filing fee schedules (14 CFR Part 389).*	Joseph A. Brooks, OGC, 202-673-5442	Order 77-4-42, dated April 8, 1977. NPRM in preparation.	Because of decisions in the Supreme Court and the U.S. Court of Appeals, the Board suspended its license fees in 1977. Its filing fees have also become outdated in relation to costs. The Board is considering a rulemaking to change its method for calculating filing fees and to bring them into line with current costs. It is also considering deleting the suspended license fees.
66. *Determination of depreciation for service mail rates (14 CFR 399.42).*	Julien R. Schrenk, BDA, 202-673-5298	NPRM, 45 FR 66474, October 7, 1980 (PSDR-67, Docket 38784). Comment period closed November 6, 1980.	It is now the Board's policy, for ratemaking purposes, to use a prescribed depreciation method for flight equipment. This policy, in 14 CFR 399.42, requires straight-line depreciation with a table establishing service lives and residual value percentages. The Board is proposing a change so that the carriers' own methods of flight equipment depreciation may be used to determine service mail rates for non-subsidized carriers.

Existing Rules Under Review—Continued

Title	Contact person	Status	Description
67. *Domestic passenger fare standards (14 CFR Part 399, Subpart C)*	Julien Schrenk, BDA, 202-673-5298	Final rule, 43 FR 39102, September 5, 1978 (PS-82). Final rule, 45 FR 24419, April 9, 1980 (PS-92, Docket 31290). Interim policy statement, 45 FR 40969, June 17, 1980 (PS-94, Docket 37982). Interim policy statement, 45 FR 48600, July 21, 1980 (PS-96, Dockets 37982, 33836, 35119, 29198). Interim policy statement, 45 FR 70431, October 24, 1980 (PS-98, Docket 37982).	In Summer, 1978, after a review of the entire body of pricing standards developed in the *Domestic Passenger Fare Investigation*, the Board ended its practice of prescribing normal fares in the continental United States. Airlines were instead allowed the flexibility to set fares within a specific zone without fear of suspension by the Board. The Airline Deregulation Act of 1978 confirmed this policy by establishing a "zone of reasonableness" within which the Board could not find any domestic fare unlawful. In PS-92, the Board amended its general policy statement on fare flexibility to reflect the Deregulation Act. In PS-94, the Board broadened its zone with an interim policy of full downward fare flexibility in all markets and upward flexibility as follows: unlimited, for markets up to 200 miles; up to 50 percent above the standard industry fare level for markets from 201 to 400 miles; and up to 30 percent above the standard industry fare level for markets above 400 miles. Upon reconsidering PS-94, the Board in PS-98 revised its interim policy to allow upward fare flexibility to the standard industry fare level plus $15, plus another 30 percent, in all markets. The Board will suspend fares in this zone only in limited circumstances. In PS-96, the Board adopted broadened flexibility for Puerto Rico, Virgin Islands, Hawaii, and Alaska markets. The Board is continually monitoring passenger fares and reviewing its flexibility policies.

Appendix.—*Rulemaking Completed or Terminated Since Previous Agenda*

[Numbers in brackets are entry numbers from previous agenda]

Title	Contact person	Status	Description
[6.] *Price advertising of air transportation*	David Schaffer, OGC, 202-673-5442	Rulemaking terminated, 45 FR 61640, September 17, 1980 (EDR-328B, SPDR-58B, PSDR-48B)	The Board terminated this rulemaking, which was directed at changing the price advertising rules for charters, because the problems addressed by this proceeding have been mitigated by the Public Charter rule (14 CFR Part 380). The problems that remain can be dealt with through existing enforcement procedures.
[7.] *Scheduled-service air transportation sold by contract.*	Barbara Badian, BDA, 202-673-5373	Rulemaking terminated	The Board contemplated a rule that would permit carriers to sell scheduled service by contract without the need to file tariffs or adhere to them. This issue is already being addressed in other proceedings.
[10.] *Involuntary refunds*	Patricia Kennedy, BCP, 202-673-5158	Rulemaking terminated	Airlines charge passengers for the transportation actually used, even when the flight does not reach the ticketed destination. This rule would have required airlines to give passengers who are stranded by a schedule irregularity the option of returning to their point of origin on the first available flight and receiving a refund. This rulemaking has been terminated because the problems in this area do not appear to be significant enough to justify regulatory intervention.
[11.] *Intrastate standard industry fare levels (14 CFR Part 399).*	Laurie S. Schaffer, BDA, 202-673-5009 or Mark S. Kahan, BDA, 202-673-5371	Interim rule, 44 FR 9340, February 15, 1979 (PS-82). Final rule, 45 FR 42054, June 24, 1980 (PS-95)	The Board's zones of fare flexibility are based on a standard industry fare level (SIFL). The interim rule provided for a gradual equalization of the intrastate and interstate SIFL. The intrastate SIFL was lower. In the final rule the Board accelerated the schedule to provide complete equalization immediately because of changed circumstances in the airline industry that may discourage service in the intrastate markets.
[16.] *Removal of limitations on cargo charters (14 CFR Parts 207, 208, 212, 214).*	James A. Lawyer, BDA, 202-673-5060	Final rule, 45 FR 53102, August 11, 1980 (ER-1090, 1091, 1092, 1093)	This rule allows cargo to be carried on the main deck of the aircraft on split passenger/cargo charters, eliminates for cargo charters the requirement that the entire aircraft be engaged in the aggregate, and allows part charters of cargo on scheduled cargo or combination flights. It also requires passenger charter operators to state in their contracts with individual participants, in boldface type, the baggage allowance and charges for each passenger.
[17.] *Minimum contract size and notice provisions for pro rata and single-entity charters (14 CFR Parts 207, 208, 212, 214)*	James A. Lawyer, BDA, 202-673-5060	Final rule, 45 FR 41872, June 16, 1980 (ER-1176, 1177, 1178, 1179)	This rule reduces from 40 persons to 20 the minimum contract size for pro rata, or "affinity," charters and for single-entity charters. It also requires a notice in all solicitation materials for pro rata charters, to warn participants of the lack of consumer protection provisions.
[20.] *Elimination of off-route charter restrictions (14 CFR Part 207).*	James A. Lawyer, BDA, 202-673-5060	Final rule, 45 FR 53102, August 11, 1980 (ER-1090)	This rule continues the Board's liberalization of its charter rules by lifting the remaining restrictions on off-route charters by U.S. airlines.
[22.] *Charter consumer protection against major changes (14 CFR Part 380)*	Mark Schwimmer, OGC, 202-673-5442	Rulemaking terminated	The Board's current rules establish a cancel-with-refund remedy scheme for charter participants who are confronted with "major changes" in the tour packages that they have purchased. This rule would have clarified that scheme so that it could not be misinterpreted

Appendix.—*Rulemaking Completed or Terminated Since Previous Agenda*—Continued

[Numbers in brackets are entry numbers from previous agenda]

Title	Contact person	Status	Description
			as excusing changes that are so substantial as to amount to nonperformance by the charter operator. The Board has terminated this rulemaking because experience with the major change rules has not shown this possibility of misinterpretation to be a serious problem. If new problems arise, this rulemaking can be restarted.
[30.] *Air carrier fitness (14 CFR Part 204)*	Sherry Kinland, BDA, 202-673-5333; or Susan Kahan, BDA, 202-673-5333.	Final rule, 45 FR 42593, June 25, 1980 (ER-1180).	This rule establishes data submission requirements for fitness determinations. Under the Airline Deregulation Act of 1978, the Board must determine the initial fitness of all applicants for passenger route authority, all commuters serving an eligible point, and carriers who propose to provide, or who are providing, essential air service. The Board must also monitor the continuing fitness of all carriers holding route authority and of all commuters serving an eligible point.
[38.] *Mandatory participation in passenger origin-destination survey (14 CFR Part 241).*	Clifford M. Rand, OC, 202-673-6014	Final rule, 45 FR 67656, October 14, 1980 (ER-1201).	This rule requires all certificated air carriers to participate in a Passenger Origin-Destination Survey based on a continuous sample of passenger tickets. This information is needed to serve a broad range of regulatory programs still being conducted by the Board.
[42.] *Rules governing performance of charter flights by different types of direct air carriers (14 CFR Parts 207, 208, 212, 214).*	Mark Schwimmer, OGC, 202-673-5442	Rulemaking terminated	This rule would have consolidated and simplified four largely duplicative CFR Parts. The rulemaking has been terminated because the consolidation would be too confusing while several other proceedings involving the same parts are in progress. The Board expects to revive this rulemaking at a later date.
[46.] *Airline credit/interest rates (14 CFR 221.38).*	Mary Candace Fowler, BCP, 202-673-5158	Rulemaking terminated	Current rules enable airlines to charge interest in excess of state usury laws for air transportation that is paid for with airline-issued credit cards. This rule would have made airlines subject to usury laws in the card holder's home state. The rulemaking has been terminated because on review, the problems presented by current rules appear insufficient to justify a change in policy.
[50.] *Barter and free or reduced-rate transportation for promotional purposes (14 CFR Part 223).*	David Schaffer, OGC, 202-673-5442	Final rules, 45 FR 46797, July 11, 1980 and 45 FR 47674, July 16, 1980 (ER-1181-1185 and ER-1186).	These rules allow airlines to provide free or reduced-rate travel in exchange for goods and services or to persons involved in promoting air transportation.
[52.] *Air carrier accounting and reporting requirements (14 CFR Part 241).*	Clifford M. Rand, OC, 202-673-6044	Final rule, 45 FR 48867, July 22, 1980 (ER-1188).	This rule eliminated 10 financial reporting schedules from the Board's largest reporting system and condensed monthly financial reporting, as an alternative to a petition by the Air Transport Association to eliminate monthly financial reporting altogether. It also added a new statistical report for small certificated air carriers.
[55.] *Military airlift command data reports (14 CFR Part 243).*	Clifford M. Rand, OC, 202-673-6044	Final rule, 45 FR 66451, October 7, 1980 (ER-1200).	This rule eliminates certain financial and statistical reporting that no longer appears necessary.
[61.] *Elimination of commission-filing requirement (14 CFR Parts 253, 399.85).*	David Schaffer, OGC, 202-673-5442	Final rule, 45 FR 48599, July 21, 1980 (ER-1187).	This rule eliminates the requirement that airlines file with the Board schedules of the commissions that they pay travel agents. The usefulness of those filings is not justified by their cost, and the requirement could tend to dampen competition.
[63.] *Rules of practice in enforcement proceedings (14 CFR Part 302).*	Howard M. Schmeltzer, BCP, 202-673-5937	Rulemaking terminated	This rule would have simplified and clarified Board procedures, and expedited the resolution of formal enforcement proceedings. This proceeding has been terminated because a rule does not appear to be necessary.
[68.] *Monthly billing of political candidates by airlines (14 CFR Part 374a).*	Joseph A. Brooks, OGC, 202-673-5442	Final rule, 45 FR 53453, August 12, 1980 (SPR-172).	This rule allows airlines to bill political candidates for Federal office on a monthly basis during the last two months of the campaign, rather than semimonthly.

[FR Doc. 80-36924 Filed 11-26-80; 8:45 am]
BILLING CODE 6320-01-M

DEPARTMENT OF TRANSPORTATION

Federal Aviation Administration

14 CFR Part 71

[Airspace Docket No. 80-SO-72]

Proposed Alteration of Transition Area Bay St. Louis, Mississippi

AGENCY: Federal Aviation Administration (FAA), DOT.

ACTION: Notice of proposed rulemaking

SUMMARY: This proposed rule will alter the Bay St. Louis, Mississippi, Transition Area by lowering the base of controlled airspace north of Stennis International Airport from 1200 to 700 feet AGL. A new public use standard instrument approach procedure has been developed for the airport, and additional controlled airspace is required to protect aircraft Instrument Flight Rule (IFR) operations.

DATES: Comments must be received on or before: December 29, 1980.

ADDRESS: Send comments on the proposal to: Federal Aviation Administration, Chief, Air Traffic Division, P.O. Box 20636, Atlanta, Georgia 30320.

FOR FURTHER INFORMATION CONTACT: Harlen D. Phillips, Airspace and Procedures Branch, Federal Aviation

Administration, P.O. Box 20636, Atlanta, Georgia 30320; telephone: 404-763-7646.

SUPPLEMENTARY INFORMATION:

Comments Invited

Interested persons may participate in the proposed rulemaking by submitting such written data, views or arguments as they may desire. Communications should identify the airspace docket number and be submitted in triplicate to the Director, Southern Region, Federal Aviation Administration, Attention: Chief, Air Traffic Division, P.O. Box 20636, Atlanta, Georgia 30320. All communications received on or before December 29, 1980, will be considered before action is taken on the proposed amendment. The proposal contained in this notice may be changed in the light of comments received. All comments submitted will be available, both before and after the closing date for comments, in the Rules Docket for examination by interested persons. A report summarizing each public contract with FAA personnel concerned with this rulemaking will be filed in the public, regulatory docket.

Availability of NPRM

Any person may obtain a copy of this notice of proposed rulemaking (NPRM) by submitting a request to the Federal Aviation Administration, Office of Public Affairs, Attention: Public Information Center, APA-430, 800 Independence Avenue SW., Washington, D.C. 20591, or by calling (202) 426-8058. Communications must identify the notice number of this NPRM. Persons interested in being placed on a mailing list for future NPRMs should also request a copy of Advisory Circular No. 11-2 which describes the application procedures.

The Proposal

The FAA is considering an amendment to Subpart G of Part 71 of the Federal Aviation Regulations (14 CFR 71) to alter the Bay St. Louis, Mississippi, 700-foot Transition Area. This action will provide controlled airspace protection for aircraft executing the NDB RWY 17 standard instrument approach procedure at the Stennis International Airport. The Hanco (nonfederal) nondirectional radio beacon, which will support the approach procedure, is proposed for establishment in conjunction with designation of the transition area.

The Proposed Amendment

Accordingly, the Federal Aviation Administration proposes to amend Subpart G, § 17.181 (45 FR 445), of Part 71 of the Federal Aviation Regulations (14 CFR 71) as follows:

Bay St. Louis, Mississippi

The present description is deleted and ". . . The airspace extending upward from 700 feet above the surface within a 6.5-mile radius of Stennis International Airport (lat. 30°22'15"N., long. 89°27'16"W.); within 3 miles each side of the 359° bearing from the Hanco NDB (lat. 30°27'03"N., long. 89°27'19"W.), extending from the 6.5-mile radius area to 8.5 miles north of the NDB . . .".

(Sec. 307(a) of the Federal Aviation Act of 1958, as amended (49 U.S.C. 1348(a)) and Sec. 6(c) of the Department of Transportation Act (49 U.S.C. 1655(c)))

Note.—The Federal Aviation Administration has determined that this document involves a proposed regulation which is not significant under Executive Order 12044, as implemented by DOT Regulatory Policies and Procedures (44 FR 11034, February 26, 1979). Since this regulatory action involves an established body of technical requirements for which frequent and routine amendments are necessary to keep them operationally current and promote safe flight operations, the anticipated impact is so minimal that this action does not warrant preparation of a regulatory evaluation.

Issued in East Point, Georgia, on November 18, 1980.

Louis J. Cardinali,

Director, Southern Region.

[FR Doc. 80-36826 Filed 11-26-80; 8:45 am]

BILLING CODE 4910-13-M

DEPARTMENT OF COMMERCE

National Oceanic and Atmospheric Administration

15 CFR Part 970

Deep Seabed Mining for Future Proposed Rulemaking; Availability of Discussion Paper

AGENCY: National Oceanic and Atmospheric Administration, Commerce.

ACTION: Notice of availability of discussion paper on deep seabed mining and related public meeting.

SUMMARY: Public Law 96-283, the Deep Seabed Hard Mineral Resources Act (the Act), authorizes the Administrator of the National Oceanic and Atmospheric Administration (NOAA) to issue to eligible United States citizen applicants licenses for exploration for, and permits for the commercial recovery of, deep seabed hard minerals. This notice is issued to advise interested persons of the availability of a discussion paper which has been developed by NOAA in preparation for the issuance of proposed rules to implement the Act, to invite attendance at a meeting for discussion of the paper, and to invite comments on the paper.

DATES: Public meeting: December 17, 1980, 1:30 p.m. Comments should be received by December 31, 1980.

ADDRESS: The discussion paper may be obtained from and all comments should be sent to: Office of Ocean Minerals and Energy, National Oceanic and Atmospheric Administration, Page 1 Building, Suite 410, 2001 Wisconsin Ave., NW., Washington, D.C. 20235.

Meeting location: Room 4830, Department of Commerce, 14th Street and Constitution Ave., NW., Washington, D.C.

FOR FURTHER INFORMATION CONTACT: James P. Lawless, at the above address, telephone: (202) 653-8257.

SUPPLEMENTARY INFORMATION: The Act requires that NOAA issue implementing regulations for the issuance of deep seabed mining exploration licenses and commercial recovery permits. In preparation for the issuance of proposed regulations in March 1981, NOAA has prepared a discussion paper which sets forth preliminary thoughts on and potential approaches for major issue areas contained in the Act. NOAA is seeking public comments on this discussion paper, which may be obtained from the above address.

A public meeting concerning this discussion paper has been scheduled for 1:30 p.m. on Wednesday, December 17, 1980, in Room 4830, Department of Commerce, 14th Street and Constitution Avenue, NW., Washington, D.C. Interested persons are urged to attend.

Dated: November 20, 1980.

Francis J. Balint,

Acting Director, Office of Management and Computer Systems.

[FR Doc. 80-37052 Filed 11-26-80; 8:45 am]

BILLING CODE 3510-12-M

DEPARTMENT OF HEALTH AND HUMAN SERVICES

Food and Drug Administration

[21 CFR Part 211]

[Docket No. 80N-0291]

Current Good Manufacturing Practice in Manufacture, Processing, Packing, or Holding; Proposed Reduction of Reserve Sample Retention Requirements for Radioactive Drugs

AGENCY: Food and Drug Administration.

ACTION: Proposed rule.

SUMMARY: The Food and Drug Administration (FDA) proposes to

amend the current good manufacturing practice (CGMP) regulations for human and veterinary drugs to reduce the time that reserve samples of radioactive drugs are required to be retained by manufacturers. This action is based on information, submitted as a petition, that the current requirements concerning reserve samples are unnecessary for certain radioactive drugs that typically have short expiration dating periods because of the rapid rate of radioactive decay.

DATE: Comments by January 27, 1981.

ADDRESS: Written comments to the Dockets Management Branch (formerly the Hearing Clerk's office) (HFA-305), Food and Drug Administration, Rm. 4-62, 5600 Fishers Lane, Rockville, MD 20857.

FOR FURTHER INFORMATION CONTACT:
Clifford G. Broker (HFD-323), 301-443-5307, or
Philip L. Paquin (HFD-30), 301-443-5220, Bureau of Drugs, Food and Drug Administration, 5600 Fishers Lane, Rockville, MD 20857.

SUPPLEMENTARY INFORMATION: In the Federal Register of September 29, 1978 (43 FR 45014), FDA published final regulations regarding CGMP for human and veterinary drug products. Most of the requirements under those final regulations became effective on March 28, 1979.

On January 22, 1979, Mallinckrodt, Inc., 675 Brown Rd., St. Louis, MO 63134, submitted a citizen petition under 21 CFR 10.25(a) to amend the CGMP regulations in § 211.170 (21 CFR 211.170) by reducing the retention period for reserve samples of radioactive drug products and their active ingredients. A copy of the petition is on file under Docket No. 79P-0026/CP in the Dockets Management Branch (address given above), and may be seen between 9 a.m. and 4 p.m., Monday through Friday.

The CGMP regulations require in § 211.170 that a reserve sample representative of each lot in each shipment of each active ingredient be retained for at least 1 year after the expiration date of the last lot of the drug product containing the active ingredient and, further, that a reserve sample representative of each lot or batch of drug product be retained for at least 1 year after the expiration date of the drug product. The petitioner requests that these requirements be amended to reduce the retention period for reserve samples of radioactive drug products and their active ingredients.

The petitioner suggested that the present requirements for retaining reserve samples are unnecessarily long for radioactive drugs because they are used far more rapidly than is usual for nonradioactive drugs. The petitioner stated that radioactive drug products and their active ingredients (radionuclides), because of the natural process of radioactive decay, have expiration dating periods substantially shorter than most nonradioactive drug products and their active ingredients. The petitioner submitted physical half-life (that is, a one-half reduction in radioactivity) and expiration dating information on 10 radionuclides used in preparing 20 radioactive drug products and half-life information concerning 13 additional radionuclides. Of these 23 radionuclides, 11 have half-lives of less than 10 days; 2 have half-lives of less than 30 days; and 5 of the remaining 10 have half-lives of 60 days or less.

The petitioner stated that because the expiration dating periods for radioactive drugs are shorter, many more lots of these drugs are produced than are produced of nonradioactive drugs. This increased production creates storage problems because of the retention of the corresponding large number of reserve samples. The petitioner also stated that because of the need for radiation protection, the type of storage required for radioactive drugs is considerably more costly than that needed for reserve samples of nonradioactive drugs.

The petitioner commented that the length of time these drug products can be used is strictly limited because their action is dependent on adequate radioactivity. The petitioner noted that the reporting of complaints and adverse patient experiences are related to the useful life of radioactive drugs. Accordingly, the petitioner recommended that the retention period for reserve samples of radioactive drugs be substantially reduced to more closely correlate with the expiration date of these drug products. The petitioner suggested that a reserve sample retention period of 3 months after the expiration date of the radioactive drug product provides sufficient time in which to receive any product complaints, to complete any needed investigations on a particular batch, and thereby to ensure that consumers are adequately protected.

The agency believes that the petitioner's request to reduce the retention period for reserve samples for radioactive drugs has merit and proposes to adopt the petitioner's recommendations in part. Although many of the commonly used radionuclides used in preparing radioactive drug products have half-lives less than 30 days, there are enough radionuclides with half-lives of more than 30 days to warrant establishing two different reserve sample retention periods. In the agency's opinion, reserve samples of radioactive drug products with expiration dating periods of more than 30 days would often have measurable radioactivity for up to 6 months after their expiration dating period. Reserve samples of these products could be expected to supply useful information in the investigation of product complaints, adverse patient reactions, or manufacturing problems for that period of time. Therefore, FDA proposes to amend § 211.170 by specifying that the retention period be 3 months for reserve samples of radioactive drugs with an expiration dating period of 30 days or less and 6 months for radioactive drugs with an expiration dating period of more than 30 days. The agency specifically requests comments on its proposed retention period of 6 months for these products.

In light of the proposed amendment, the agency has evaluated whether the requirement in § 211.170 for the visual examination of reserve samples at least once a year for evidence of deterioration is appropriate for radioactive drug products. The agency tentatively concludes that this requirement is not warranted for these products because they are subject to sophisticated evaluation by medical personnel in that the radioactivity of each dosage unit is normally measured prior to administration or dispensing. Thus, the agency believes that these unique quality surveillance measures accomplish the results intended by the visual examination requirement. Further, the visual examination of reserve samples would expose personnel conducting the examination to radiation hazards that may not be warranted in view of the unique controls on these products. Therefore, the agency also proposes to amend § 211.170 by exempting radioactive drug products containing radionuclides from the requirement of examining reserve samples visually at least once a year for evidence of deterioration. Consistent with these proposals, the agency also proposes to reorganize and editorially revise the text of § 211.170 for the sake of clarify. This clarification includes a specific reference to § 211.192 for an appropriate followup investigation when a visual examination of the reserve sample reveals evidence of deterioration.

The agency notes that the proposed reserve sample retention requirements and the proposed exemption from the visual examination of reserve samples for radioactive drugs are strictly limited

to those drug components and drug products that actually contain radionuclides subject to decay. Therefore, nonradioactive reagent kits, which do not contain radionuclides, but are defined as "radioactive drugs" under § 310.3(n) (21 CFR 310.3(n)) for other purposes of regulating radiopharmaceuticals, are excluded from the reduced sample retention period for radioactive drugs under this proposal. The agency has tentatively concluded that nonradioactive reagent kits should be included in the reserve sample retention period for nonradioactive drugs, because the expiration date for these drug products, if they have not been compounded with a radionuclide, is unrelated to any rate of radioactive decay. If this distinction presents problems to manufacturers of radioactive pharmaceuticals, comments should be submitted on this proposal.

The agency has also determined that because of the nature of the proposed change, it is in the public interest to allow manufacturers to adopt, on an interim basis, the provisions of this proposal. Thus, manufacturers of radioactive drugs may begin, on the publication date of this proposal, to retain reserve samples of radioactive drugs for a period of 3 months or 6 months as appropriate. Pending the receipt of comments on this proposal and the agency's final decision on the matter, this policy will remain in effect. If the agency determines not to adopt this proposal as a final rule, a notice announcing that decision will be published in the Federal Register.

The agency has determined pursuant to 21 CFR 25.24(d)(12) (proposed December 11, 1979, 44 FR 71742) that this action is of a type that does not individually or cumulatively have a significant impact on the human environment. Therefore, neither an environmental assessment nor an environmental impact statement is required.

Therefore, under the Federal Food, Drug, and Cosmetic Act (secs. 501, 502, 505, 512, 701, 52 Stat. 1049–1053 as amended, 1055–1056 as amended, 82 Stat. 343–351 (21 U.S.C. 351, 352, 355, 360b, 371)) and under authority delegated to the Commissioner of Food and Drugs (21 CFR 5.1), it is proposed that Part 211 be amended by revising § 211.170 to read as follows:

§ 211.170 Reserve samples.

(a) An appropriately identified reserve sample that is representative of each lot in each shipment of each active ingredient shall be retained. The reserve sample consists of at least twice the quantity necessary for all tests required to determine whether the active ingredient meets its established specifications, except for sterility and pyrogen testing. The retention time is as follows:

(1) For an active ingredient in a drug product other than those described in paragraphs (a)(2) and (3) of this section, the reserve sample shall be retained for 1 year after the expiration date of the last lot of the drug product containing the active ingredient.

(2) For an active ingredient in a radioactive drug product, except for nonradioactive reagent kits, the reserve sample shall be retained for:

(i) Three months after the expiration date of the last lot of the drug product containing the active ingredient if the expiration dating period of the drug product is 30 days or less; or

(ii) Six months after the expiration date of the last lot of the drug product containing the active ingredient if the expiration dating period of the drug product is more than 30 days.

(3) For an active ingredient in an OTC drug product that is exempt from bearing an expiration date under § 211.137, the reserve sample shall be retained for 3 years after distribution of the last lot of the drug product containing the active ingredient.

(b) An appropriately identified reserve sample that is representative of each lot or batch of drug product shall be retained and stored under conditions consistent with product labeling. The reserve sample shall be stored in the same immediate container-closure system in which the drug product is marketed or in one that has essentially the same characteristics. The reserve sample consists of at least twice the quantity necessary to perform all the required tests, except those for sterility and pyrogens. Reserve samples, except those drug products described in paragraph (b)(2), shall be examined visually at least once a year for evidence of deterioration unless visual examination would affect the integrity of the reserve samples. Any evidence of reserve sample deterioration shall be investigated in accordance with § 211.192. The results of the examination shall be recorded and maintained with other stability data on the drug product. Reserve samples of compressed medical gases need not be retained. The retention time is as follows:

(1) For a drug product other than those described in paragraphs (b)(2) and (3) of this section, the reserve sample shall be retained for 1 year after the expiration date of the drug product.

(2) For a radioactive drug product, except for nonradioactive reagent kits, the reserve sample shall be retained for:

(i) Three months after the expiration date of the drug product if the expiration dating period of the drug product is 30 days or less; or

(ii) Six months after the expiration date of the drug product if the expiration dating period of the drug product is more than 30 days.

(3) For an OTC drug product that is exempt from bearing an expiration date under § 211.137, the reserve sample must be retained for 3 years after the lot or batch of drug product is distributed.

Interested persons may, on or before January 27, 1981 submit to the Dockets Management Branch (formerly the Hearing Clerk's office) (HFA–305), Food and Drug Administration, Rm. 4–62, 5600 Fishers Lane, Rockville, MD 20857, written comments regarding this proposal. Four copies of any comments are to be submitted, except that individuals may submit one copy. Comments are to be identified with the docket number found in brackets in the heading of this document. Received comments may be seen in the office above between 9 a.m. and 4 p.m., Monday through Friday.

Note.—In accordance with Executive Order 12044, as amended by Executive Order 12221, the economic effects of this proposal have been carefully analyzed, and it has been determined that the proposed rulemaking does not involve major economic consequences as defined by that order. A copy of the regulatory analysis assessment supporting this determination is on file with the Dockets Management Branch, Food and Drug Administration.

Dated: November 19, 1980.

William F. Randolph,

Acting Associate Commissioner for Regulatory Affairs.

[FR Doc. 80-36880 Filed 11-26-80; 8:45 am]

BILLING CODE 4110-03-M

---

21 CFR Part 452

[Docket No. 80N-0406]

Erythromycin Enteric-Coated Tablets; Revision of Disintegration Standard

AGENCY: Food and Drug Administration.

ACTION: Proposed rule.

SUMMARY: The Food and Drug Administration (FDA) proposes to amend the antibiotic drug regulations by revising the disintegration standard for erythromycin enteric-coated tablets for human use. This revision will assure better quality control of this product.

DATES: Comments by January 27, 1981; requests for informal conference by December 29, 1980.

ADDRESS: Written comments and conference request to the Hearing Clerk

(HFA-305), Food and Drug Administration, Rm. 4-62, 5600 Fishers Lane, Rockville, MD 20857.

FOR FURTHER INFORMATION CONTACT: Joan M. Eckert, Bureau of Drugs (HFD-140), Food and Drug Administration, 5600 Fishers Lane, Rockville, MD 20857, 301-443-4290.

SUPPLEMENTARY INFORMATION: At the request of a manufacturer, FDA proposes to amend the antibiotic drug regulations by revising the disintegration standard for erythromycin enteric-coated tablets from 2 hours to 1 hour and 25 minutes.

Enteric-coated tablets are indicated where a drug may be destroyed or inactivated by the gastric (stomach) juice or where it may irritate the gastric lining. The disintegration test for enteric-coated tablets (21 CFR 436.212(e)(3)) measures the rate of disintegration of this dosage form and is performed in two steps. The tablets are first immersed in simulated gastric fluid for 60 minutes. If the tablets have not disintegrated, they are placed in simulated intestinal fluid for the time specified in the individual monograph (regulation) minus 60 minutes. The monograph providing for erythromycin enteric-coated tablets specifies a total disintegration time period of 2 hours. This allows for 60 minutes in simulated gastric fluid and 60 minutes in simulated intestinal fluid. If the tablets have not disintegrated in 2 hours, they do not meet the standard for disintegration.

Based on a review of disintegration times of more than 80 batches of erythromycin enteric-coated tablets and in consideration of reasonable variations due to product aging and test method performance, the manufacturer recommends that the 60 minutes in simulated intestinal fluid be reduced to 20 minutes.

FDA has reviewed the data submitted by the manufacturer requesting the change and other manufacturers involved and concludes that a disintegration time period of 25 minutes in simulated intestinal fluid is a more accurate time period. Therefore, FDA is proposing that a disintegration standard of 1 hour and 25 minutes be established for erythromycin enteric-coated tablets.

The agency has determined pursuant to 21 CFR 25.24(b)(22) (proposed December 11, 1979; 44 FR 71742), that this proposed action is of a type that does not individually or cumulatively have a significant impact on the human environment. Therefore, neither an environmental assessment nor an environmental impact statement is required.

Therefore, under the Federal Food, Drug, and Cosmetic Act (sec. 507, 59 Stat. 463 as amended (21 U.S.C. 357)) and under authority delegated to the Commissioner of Food and Drugs (21 CFR 5.1), it is proposed that Part 452 be amended in § 452.110b(a)(1) by revising the fourth sentence to read as follows:

§ 452.100b Erythromycin enteric-coated tablets.

(a) * * *

(1) * * * Each tablet shall disintegrate within a total time of 1 hour and 25 minutes. * * *

* * * * *

Interested persons may, on or before January 27, 1981 submit to the Hearing Clerk (HFA-305), Food and Drug Administration, Rm. 4-62, 5600 Fishers Lane, Rockville, MD 20857, written comments regarding this proposal. Four copies of any comments shall be submitted, except that individuals may submit single copies of comments. The comments are to be identified with the Hearing Clerk docket number found in brackets in the heading of this document. Received comments may be seen in the office above between 9 a.m. and 4 p.m., Monday through Friday.

Interested persons may also, on or before December 29, 1980 submit to the Hearing Clerk (address above) a request for an informal conference. The participants in an informal conference, if one is held, will have until January 27, 1981, or 30 days after the day of the conference, whichever is later, to submit their comments.

Note.—In accordance with Executive Order 12044, as amended by Executive Order 12221, the economic effects of this proposal have been carefully analyzed, and it has been determined that the proposed rulemaking does not involve major economic consequences as defined by that order. A copy of the regulatory analysis assessment supporting this determination is on file with the Hearing Clerk, Food and Drug Administration.

Dated: November 18, 1980.

Mary A. McEniry,

Assistant Director for Regulatory Affairs, Bureau of Drugs.

[FR Doc. 80-36870 Filed-11-26-80; 8:45 a.m.]

BILLING CODE 4110-03-M

---

21 CFR Part 640

[Docket No. 80N-0436]

Additional Standards for Human Blood and Blood Products; Source Plasma (Human)

AGENCY: Food and Drug Administration.

ACTION: Proposed rule.

SUMMARY: The Food and Drug Administration (FDA) proposes to amend the biologics regulations concerning the additional standards for Source Plasma (Human) to clarify the conditions under which initial medical examinations are to be performed on a donor who is to be immunized for the production of high titer plasma. This action is being taken to avoid unnecessary duplication of the initial medical examination for a donor who has previously undergone an initial medical examination for plasmapheresis and who is subsequently to be immunized for the production of high titer plasma.

DATE: Comments by January 27, 1981. The proposed effective date of the final rule is 30 days after the date of its publication in the Federal Register.

ADDRESS: Written comments to the Dockets Management Branch (formerly the Hearing Clerk's office) (HFA-305), Food and Drug Administration, Rm. 4-62, 5600 Fishers Lane, Rockville, MD 20857.

FOR FURTHER INFORMATION CONTACT: T. Rada Proehl, Bureau of Biologics (HFB-620), Food and Drug Administration, 8800 Rockville Pike, Bethesda, MD 20205, 301-443-1306.

SUPPLEMENTARY INFORMATION: In the Federal Register of March 12, 1976 (41 FR 10762), FDA amended the Source Plasma (Human) regulations in §§ 640.60 through 640.70 (21 CFR 640.60 through 640.70) by redefining Source Plasma (Human) and clarifying and strengthening the standards in light of the inspectional and other regulatory experiences of the agency. Section 640.63(b) was amended to require that (1) the initial medical examination of a donor who is to be immunized for the production of high titer plasma must be performed within 1 week before the first immunization injection, and (2) the medical examination for plasmapheresis need not be repeated if the first donation occurs within 21 days after the first injection.

In the preamble to the March 12, 1976 final rule, FDA responded to submitted information indicating that donors receiving immunization injections for the production of high titer plasma are often immunized a week or more before their first physical examination for a plasmapheresis donation. The agency concluded that the initial medical examination must be performed before the immunization procedure is begun in the interest of the health of these donors. In addition, the agency concluded that a medical examination need not be repeated for an immunized donor if the first donation occurred

within 21 days after the first injection. These requirements were promulgated with the intention of preventing a first time plasmapheresis donor from being immunized for the production of high titer plasma before the initial medical examination for plasmapheresis is performed.

From a review of inspection reports of establishments collecting plasma, FDA finds that § 640.63(b)(2) has been interpreted to require that all donors being immunized for the production of high titer plasma receive an initial medical examination before immunization. This interpretation includes an active plasmapheresis donor who has previously received an initial medical examination for plasmapheresis pursuant to § 640.63(b)(1). FDA advises that these requirements are not intended to apply to a donor who is actively participating in a plasmapheresis program, because an active plasmapheresis donor should have received an initial medical examination pursuant to § 640.63(b)(1). FDA believes that the repetition of the initial medical examination for an active plasmapheresis donor who is to be immunized for the production of high titer plasma is unnecessary and is a misapplication of § 640.63(b)(2). Accordingly, the agency is proposing to amend § 640.63(b)(2) to specify that the initial medical examination for a donor who is to be immunized for the production of high titer plasma need not be repeated when the donor has undergone an initial medical examination for plasmapheresis in accordance with § 640.63(b)(1). This proposed action is also consistent with Executive Order 12044 "Improving Government Regulation," which requires, among other things, that regulations be simple and clear and reviewed periodically to determine their continued need.

The agency proposes that the effective date of any final regulation issued under this proposed 30 days after publication of the final regulation in the Federal Register.

The agency has determined pursuant to 21 CFR 25.24(d)(10) (proposed December 11, 1979, 44 FR 71742) that this proposed action is of a type that does not individually or cumulatively have a significant impact on the human environment. Therefore, neither an environmental assessment nor an environmental impact statement is required.

Therefore, under the Public Health Service Act (sec. 351, 58 Stat. 701 as amended (42 U.S.C. 262)) and under authority delegated to the Commissioner of Food and Drugs (21 CFR 5.1), it is proposed that Part 640 be amended in § 640.63(b)(2), to read as follows:

§ 640.63 Suitability of donor.

* * * * *

(b) *Initial medical examinations.* (1) * * *

(2) A donor who is to be immunized for the production of high titer plasma shall be examined by a qualified licensed physician. The medical examination shall be performed within no more than 1 week before the first immunization injection. A donor who is an active participant in a plasmapheresis program, and has been examined in accordance with paragraph (b)(1) of this section, need not be reexamined before immunization. The medical examination for plasmapheresis need not be repeated, if the first donation occurs within 21 days after the first injection.

* * * * *

In accordance with Executive Order 12044, as amended by Executive Order 12221, the economic effects of this proposal have been carefully analyzed, and it has been determined that the proposed rulemaking does not involve major economic consequences as defined by that order. A copy of the regulatory analysis assessment supporting this determination is on file with the Dockets Management Branch (formerly the Hearing Clerk's office), Food and Drug Administration.

Interested persons may, on or before January 27, 1981, submit to the Dockets Management Branch (formerly the Hearing Clerk's office) (HFA-305), Food and Drug Administration, Rm. 4-62, 5600 Fishers Lane, Rockville, MD 20857, written comments regarding this proposal. Four copies of any comments are to be submitted, except that individuals may submit one copy. Comments are to be identified with the docket number found in brackets in the heading of this document. Received comments may be seen in the office above between 9 a.m. and 4 p.m., Monday through Friday.

Dated: November 20, 1980.

William F. Randolph,

Acting Associate Commissioner for Regulatory Affairs.

[FR Doc. 80-37036 Filed 11-26-80; 8:45 am]
BILLING CODE 4110-03-M

---

21 CFR Part 801 and 899

[Docket No. 80N-0071]

Restricted Devices; Extension of Comment Period

AGENCY: Food and Drug Administration.

ACTION: Extension of comment period on proposed rule.

SUMMARY: The Food and Drug Administration (FDA) extends the time for submission of comments on the proposed rule to restrict the sale, distribution, or use of certain medical devices. FDA is taking this action in response to requests for an extension of the comment period.

DATE: The deadline for written comments is extended until January 16, 1981.

ADDRESS: Written comments to the Dockets Management Branch (formerly the Hearing Clerk's office) (HFA-305), Food and Drug Administration, Rm. 4-62, 5600 Fishers Lane, Rockville, MD 20857.

FOR FURTHER INFORMATION CONTACT: Michael A. Lidsky, Bureau of Medical Devices (HFK-70), Food and Drug Administration, 8757 Georgia Ave., Silver Spring, MD 20910, 301-427-7114.

SUPPLEMENTARY INFORMATION: In the Federal Register of October 3, 1980 (45 FR 65619), FDA published for public comment a proposed rule that would restrict the sale, distribution, or use of certain medical devices. The proposed rule was subject to a 60-day comment period which is scheduled to close December 2, 1980. FDA has received several requests for an extension of the comment period because of the complexity of the proposal and its potential impact on the medical device industry.

FDA agrees that the proposal is complex and potentially far-reaching and believes that additional time for the preparation and submission of meaningful and carefully proposed comments is in the public interest. The agency, therefore, finds in accordance with section 520(d)(2) of the Federal Food, Drug, and Cosmetic Act (21 U.S.C. 360j(d)(2)) that good cause exists to grant, and is granting, a 45-day extension of the comment period to January 16, 1981.

Dated: November 20, 1980.

William F. Randolph,

Acting Associate Commissioner for Regulatory Affairs.

[FR Doc. 80-37002 Filed 11-24-80; 12:17 pm]
BILLING CODE 4110-03-M

DEPARTMENT OF THE INTERIOR

Bureau of Indian Affairs

25 CFR Part 281

Heritage Preservation; Extension of Comment Period

AGENCY: Bureau of Indian Affairs, Interior.

ACTION: Proposed rule, extension of comment period.

SUMMARY: On September 15, 1980, in 45 FR 60923, a proposed rule was published concerning procedures to be followed by the Bureau of Indian Affairs in fulfilling the requirements of the National Historic Preservation Act (16 U.S.C. 470(f)) and the regulations issued by the Advisory Council on Historic Preservation (36 CFR Part 800). The comment period for that publication ended on November 14. This document extends the comment period to December 30, 1980. The reason for extending the comment period is that several Indian tribes have requested additional time to submit comments and some tribes requested that additional hearings be scheduled.

DATES: The comment period is hereby extended to December 30, 1980. Public hearings will be held on December 12 in Spokane, Washington, and on December 13 in Wisconsin.

ADDRESSES: Send comment to the Director, Office of Trust Responsibilities, Bureau of Indian Affairs, U.S. Department of the Interior, Washington, D.C. 20245.

The public hearings will be held as follows:

December 12—Federal Courthouse, 920 Riverside, Spokane, Washington, at 10:00 a.m.

December 13—Tri-County Ojibwa Center, State Highway 70, one mile west of Hertel, Wisconsin.

FOR FURTHER INFORMATION CONTACT: William C. Allan, Bureau of Indian Affairs, Albuquerque Area Office, (505) 766-3374, (FTS) 474-3374, or Dean Suagee, Bureau of Indian Affairs, Washington, D.C., (202) 343-8248, (FTS) 343-8248.

Philip S. Deloria,

Assistant Secretary—Indian Affairs.

November 19, 1980.

[FR Doc. 80-37003 Filed 11-26-80; 8:45 am]

BILLING CODE 4310-02-M

DEPARTMENT OF THE TREASURY

Internal Revenue Service

26 CFR Part 1

[LR-228-78]

Income Tax—Partnerships and Investments Credit for Used Property

AGENCY: Internal Revenue Service, Treasury.

ACTION: Notice of proposed rulemaking.

SUMMARY: This document contains proposed regulation amendments relating to partnerships and investment credit for certain used property. The amendments are necessary to make the regulations consistent with recent court cases.

DATES: Written comments and requests for a public hearing must be delivered or mailed by January 27, 1981. The amendments are proposed to be effective immediately.

ADDRESS: Send comments and requests for a public hearing to: Commissioner of Internal Revenue, Attention: CC:LR:T (LR-228-78), Washington, D.C. 20224.

FOR FURTHER INFORMATION CONTACT: Carolyn Swift of the Legislation and Regulations Division, Office of the Chief Counsel, Internal Revenue Service, 1111 Constitution Ave., N.W., Washington, D.C. 20224 (Attention: C:LR:T) (202-566-3458) (not a toll-free call).

SUPPLEMENTARY INFORMATION:

Background

Under section 38 of the Internal Revenue Code of 1954, an investment credit is available to taxpayers who purchase "used section 38 property". Under section 48(c), which defines "used section 38 property", however, property is not treated as "used section 38 property" if it is used after the taxpayer acquires it by the same person who used it before the taxpayer acquired it. Regulation § 1.48-3(a)(2)(ii)(*a*) states that property used by a partnership is considered as used by each partner. The regulation does not make any reference to the extent of the partner's interest in the partnership. Thus, for example, under this regulation if a partner owning a one third interest in the partnership purchases section 38 property from the partnership, that property will not qualify as "used section 38 property". The same is true of a partnership which purchases property from that partner.

The United States Tax Court in *Edward A. Moradian,* 53 T.C. 202 (1969), held the regulation to be invalid to the extent that it attributes use by the partnership to a partner who has a 50 percent or less interest in the partnership. The Tax Court was widely divided on the issue, however, and the Commissioner entered a nonacquiescence in the decision. 1973-2 C.B. 4. Since that time, however, there have been other cases affirming the holding of the majority in *Moradian,* including the decision of the United States Court of Appeals for the Fifth Circuit in the case of *Holloman* v. *Commissioner,* 551 F.2d 987 (5th Cir. 1977), *aff'g* T.C.M. 1975-309.

Following these court cases, a decision was made to change the practice of the Internal Revenue Service and allow a credit in cases where a partner owning a 50 percent or less interest in the partnership acquires the property from the partnership or where a partnership acquires the property from a partner owning a 50 percent or less interest in the partnership. The proposed regulation amendments, therefore, delete the portions of the existing regulations which were declared invalid in the court decisions and which no longer represent the Service's position. The proposed regulations are to be issued under the authority contained in sections 38(b) and 7805 of the Internal Revenue Code of 1954 (76 Stat. 962, 26 U.S.C. 38(b); 68A Stat. 917, 26 U.S.C. 7805).

Comments and Requests for a Public Hearing

Before adopting these proposed regulations, consideration will be given to any written comments that are submitted (preferably six copies) to the Commissioner of Internal Revenue. All comments will be available for public inspection and copying. A public hearing will be held upon written request to the Commissioner by any person who has submitted written comments. If a public hearing is held, notice of the time and place will be published in the Federal Register.

Drafting Information

The principal author of these proposed regulations is Carolyn Swift of the Legislation and Regulations Division of the Office of Chief Counsel, Internal Revenue Service. However, Personnel from other Offices of the Internal Revenue Service and Treasury Department participated in developing the regulation, both on matters of substance and style.

Proposed Amendments to the Regulations

The Income Tax Regulations (26 CFR Part 1) are proposed to be amended as follows:

§ 1.48-3 [Amended]

Section 1.48-3 is amended by deleting "(*a*) property used by a partnership shall be considered as used by each partner; and (*b*)" from paragraph (a)(2)(ii) and by deleting Example 5 from paragraph (a)(3).

Jerome Kurtz,

Commissioner of Internal Revenue.

[FR Doc. 80-37120 Filed 11-26-80; 8:45 am]

BILLING CODE 4830-01-M

DEPARTMENT OF JUSTICE

Office of the Attorney General

28 CFR Part 40

Standards for Inmate Grievance Procedures

AGENCY: Department of Justice.

ACTION: Proposed rule.

SUMMARY: The "Civil Rights of Institutionalized Persons Act," requires that the Attorney General of the United States promulgate minimum standards for inmate grievance procedures and establish a method of certifying such procedures. The following is proposed in fulfillment of these requirements.

DATE: Comments are due on or before December 29, 1980.

ADDRESS: Comments should be sent to: William R. Yeomans, Attorney-Advisor, Office for Improvements in the Administration of Justice, Department of Justice, Room 4250, Main Justice Building, Washington, D.C. 20530.

FOR FURTHER INFORMATION CONTACT: William R. Yeomans, Attorney-Advisor, Office for Improvements in the Administration of Justice, Department of Justice, Room 4250, Main Justice Building, Washington, D.C. 20530 (202-633-4582).

SUPPLEMENTARY INFORMATION: "The Civil Rights of Institutionalized Persons Act" of 1980 grants the Attorney General authority to initiate and to intervene in civil actions against states and their political subdivisions to protect the federal rights of institutionalized persons. It also encourages the protection of constitutional rights of adults in correctional facilities by encouraging the development and implementation of administrative mechanisms for the resolution of prisoner grievances within institutions.

The Act requires that the Attorney General develop minimum standards for prisoner grievance mechanisms in adult correctional and detention facilities. States and their political subdivisions voluntarily may submit plans for grievance mechanisms to the Attorney General for certification that they comply with the standards. Courts may continue cases filed pursuant to 42 U.S.C. 1983 by adults confined in correctional or detention facilities for a period of up to 90 days in order to allow exhaustion of the grievance mechanism, if the Attorney General has certified, or the court determines that the grievance mechanism is in substantial compliance with the minimum standards promulgated by the Attorney General. Such continuances should only occur if the issues raised in the action pursuant to 42 U.S.C. 1983 reasonably can be expected to be resolved by the grievance mechanism.

Section 7, Pub. L. 96-247, 94 Stat. 353 (42 U.S.C. 1997e) requires that the minimum standards for grievance mechanisms provide for an advisory role for employees and prisoners in the formulation, implementation, and operation of the mechanism; specific time limits for written replies to grievances including explanations of decisions; priority processing of emergency grievances; safeguards to prevent reprisals against grievants; and independent review of grievance decisions "by a person or other entity not under the direct supervision or direct control of the institution."

The Act also requires that the Attorney General develop a certification procedure to determine whether grievance procedures submitted to the Attorney General are in substantial compliance with the minimum standards.

For the reasons set forth in the preamble and under the authority of Pub. L. 96-247, 94 Stat. 349 (42 U.S.C. 1997), the Attorney General proposes to add a new part 40 to Title 28, Code of Federal Regulations as follows.

Dated: November 21, 1980.

Benjamin R. Civiletti,

Attorney General.

PART 40—STANDARDS FOR INMATE GRIEVANCE PROCEDURES

Subpart A—Minimum Standards for Inmate Grievance Procedures

Sec.
40.1 Definitions.
40.2 Adoption of procedures.
40.3 Communication of procedures—written and oral explanations—training.
40.4 Accessibility.
40.5 Applicability.
40.6 Remedies.
40.7 Operation and decision.
40.8 Emergency procedure.
40.9 Reprisals.
40.10 Records—nature, confidentiality.
40.11 Evaluation.

Subpart B—Procedures for Obtaining Certification of a Grievance Procedure

Sec.
40.12 Submissions by applicant.
40.13 Notice of intent to apply for certification.
40.14 Review by the Attorney General.
40.15 Conditional certification.
40.16 Full certification.
40.17 Denial of certification.
40.18 Reapplication after denial of certification.
40.19 Suspension of certification.
40.20 Withdrawal of certification.
40.21 Contemplated change in certified procedure.
40.22 Notification of court.
40.23 Significance of certification.
Appendix A—Commentary.

Authority: Pub. L. 96-247, 94 Stat. 349 (42 U.S.C. 1997).

Subpart A—Minimum Standards for Inmate Grievance Procedures

§ 40.1 Definitions.

For purposes of this part—

(a) "Act" means the Civil Rights of Institutionalized Persons Act of 1980, Pub. L. 96-247, 94 Stat. 349, (42 U.S.C. 1997).

(b) "Applicant" means a state or political subdivision of a state that submits to the Attorney General a request for certification of a grievance procedure.

(c) "Attorney General" means the Attorney General of the United States or the Attorney General's designees.

(d) "Grievance" means a written complaint by an inmate on his own behalf regarding a policy applicable within an institution, an action involving an inmate of the institution, or an incident occurring within the institution. The term "grievance" does not include a complaint relating to a parole decision.

(e) "Inmate" means an individual confined in an institution for adults who has been convicted of a crime.

(f) "Institution" means a jail, prison, or other correctional facility, or pretrial detention facility that houses adults and is owned, operated, or managed by or provides services on behalf of a state or political subdivision of a state.

(g) "State" means a State of the United States, the District of Columbia, the Commonwealth of Puerto Rico, or any of the territories and possessions of the United States.

(h) "Substantial compliance" means that there is no omission of any essential part from compliance, that any omission consists only of an unimportant defect or omission, and that there has been a firm effort to comply fully with the standards.

§ 40.2 Adoption of procedures.

Each institution seeking certification of its grievance procedure for purposes

of the Act shall adopt a written grievance procedure. Inmates and employees shall be afforded an advisory role in the formulation and implementation of a grievance procedure adopted after the effective date of these regulations, and shall be afforded an advisory role in reviewing the compliance with the standards set forth herein of a grievance procedure adopted prior to the effective date of these regulations.

§ 40.3 Communication of procedures—written and oral explanations—training.

The written grievance procedure shall be distributed to all employees and inmates of the institution, together with explanatory materials reasonably necessary to ensure that potential participants understand how to use the procedure. Additionally, each inmate and employee shall, upon arrival at the institution and periodically thereafter, receive an oral explanation of the procedure including the opportunity to have questions regarding the procedure answered orally. Explanatory materials and oral presentations shall be available in any language spoken by a significant portion of the institution's population. An inmate who does not understand a language spoken by a significant portion of the institution's population shall receive an explanation of the grievance procedure in a language in which the inmate is fluent. Impaired and handicapped inmates shall receive explanations in a manner comprehensible to them. All employees of the institution who may reasonably be expected to operate or participate in the grievance procedure.

§ 40.4 Accessibility.

Each inmate shall be entitled to invoke the grievance procedure regardless of any disciplinary, classification, or other administrative or legislative decision to which the inmate may be subject. The institution shall ensure that the procedure is accessible to impaired and handicapped inmates.

§ 40.5 Applicability.

The grievance procedure shall be applicable to a broad range of complaints and shall state specifically the types of complaints covered and excluded. At a minimum, the grievance procedure shall permit complaints by inmates regarding policies and conditions within the jurisdiction of the institution or the correctional agency that affect them personally, as well as actions by employees and inmates, and incidents occurring within the institution that affect them personally. The grievance procedure shall not supplant disciplinary procedures.

§ 40.6 Remedies.

The grievance procedure shall afford a successful grievant a meaningful remedy. Acceptable forms of relief may include, but are not limited to monetary remedies, restitution of property, reclassification, correction of records, personnel actions, agreement by institution officials to remedy an objectionable condition within a reasonable, specified time, and a change in an institution policy or practice. Although available remedies may vary among institutions, a reasonable range of meaningful remedies in each institution is necessary.

§ 40.7 Operation and decision.

(a) *Initiation.* The procedure for initiating a grievance shall be simple and include the use of a standard form. Necessary materials shall be freely available to all inmates and assistance shall be readily available for inmates who cannot complete the forms themselves. Forms shall not demand unnecessary technical compliance with formal structure or detail, but shall encourage a simple and straightforward statement of the inmate's grievance.

(b) *Inmate and employee participation.* The institution shall provide a role for employees and inmates in the operation of the system in such a manner as to promote the credibility and use of the grievance procedure. At a minimum, some employees and inmates shall be permitted to participate directly in an advisory capacity in the disposition of grievances challenging general policy and practices and to review the effectiveness and credibility of the grievance procedure. To protect confidentiality, an inmate shall not participate in the resolution of another inmate's grievance over an objection by the grievant.

(c) *Investigation and consideration.* The institution shall establish a procedure for investigating the allegations and establishing the facts of each grievance. No inmate or employee who appears to be involved in the matter shall participate in any capacity in the resolution of the grievance.

(d) *Reasoned, written responses.* Each grievance shall be answered in writing at each level of decision and review. The response shall state the reasons for the decision reached and shall include a statement that the inmate is entitled to further review, if such is available, and shall contain simple directions for obtaining such review.

(e) *Fixed time limits.* Responses shall be made within fixed time limits at each level of decision. Time limits may vary between institutions, but expeditious processing of grievances at each level of decision is essential to prevent grievances from becoming moot. In all instances must be processed from initiation to final disposition in less than 90 days, unless the grievant agrees in writing to an extension for a fixed period. Expiration of a time limit at any stage of the process shall entitle the grievant to move to the next stage of the process, unless the grievant has agreed in writing to an extension of the time for a response.

(f) *Review.* The grievant shall be entitled to review by a person or other entity, not under the institution's supervision or control, of the disposition of all grievances concerning alleged reprisals by an employee against an inmate and grievances concerning the substance or general application of policy. A grievance challenging a policy promulgated by the correctional agency that supervises the institution shall be reviewed by a person or other entity not under the supervision or control of the correctional agency. The correctional agency must give serious consideration to the results of such review, but need not agree to be bound by the results. A request for review shall be allowed automatically without interference by administrators or employees of the institution or correctional agency and such review shall be conducted without influence or interference by administrators or employees of the institution or correctional agency.

§ 40.8 Emergency procedure.

The grievance procedure shall contain special provision for responding to grievances of an emergency nature. Emergency grievances shall be defined, at a minimum, as matters regarding which disposition according to the regular time limits would subject the inmate to a substantial risk of personal injury, or cause other serious and irreparable harm to the inmate. The grievance procedure shall state specifically the matters that will be reviewed under the emergency procedure. Emergency grievances shall be forwarded immediately, without substantive review to the level at which corrective action can be taken. The procedure for resolving emergency grievances shall provide for expedited responses at every level of decision. The emergency procedure shall also include review by a person or entity not under the supervision or control of the institution.

§ 40.9 Reprisals.

The grievance procedure shall prohibit reprisals against inmates for their use of the procedure, and shall specify the steps that will be taken to prevent and redress reprisals, and the penalties for engaging in a reprisal. "Reprisal" means any action or threat of action against an inmate based on the inmate's use of or participation in the grievance procedure. Each inmate must be given written assurance that use of or participation in the grievance mechanism will not result in formal or informal reprisals against the inmate. Employees of the institution shall also be given assurances that they will not be subject to reprisals resulting from their participation in the grievance procedure. An inmate shall be entitled to pursue through the grievance procedure a complaint that a reprisal occurred against the inmate.

§ 40.10 Records—nature; confidentiality.

(a) *Nature.* Records regarding the filing and disposition of grievances shall be collected and maintained systematically by the institution. Such records shall be preserved for at least three years following final disposition of the grievance. At a minimum, such records shall include aggregate information regarding the numbers, types and dispositions of grievances, as well as individual records of the date of and the reasons for each disposition at each stage of the procedure.

(b) *Confidentiality.* Records regarding the participation of an individual in grievance proceedings shall not be available to staff or other inmates, except to the extent that access for clerical processing of the records is necessary. Such records shall not be available to individuals participating in parole decisions. Records of any testimony or evidence received in connection with a grievance proceeding shall not be made available to staff or other inmates, except to the extent that access for clerical processing is necessary or as hereafter provided. Such records shall not be available to individuals participating in parole decisions. Consistent with ensuring confidentiality, staff and inmates who are participating in the disposition of a grievance shall have access to records essential to the resolution of the grievance.

§ 40.11 Evaluation.

The grievance procedure shall contain a plan for periodic evaluation reports, at least annually, of the performance of the grievance procedure. At a minimum, such evaluation shall report on the inmates' use of the grievance procedure, including information regarding types of grievances filed, types of remedies granted, implementation of remedies numbers and types of emergency grievances, and the average time for disposition of standard and emergency grievances. The evaluation report shall include recommendations for improvements in the grievance procedure. The evaluation report shall also contain information regarding the costs generated or saved by compliance with 42 U.S.C. 1997e. Evaluation reports shall be reviewed by a person or entity not under the supervision or control of the institution with specific reference to compliance with the standards set forth in §§ 40.2 through 40.10. Such evaluation and review shall be submitted promptly after their completion to the Attorney General.

Subpart B—Procedures for Obtaining Certification of a Grievance Procedure

§ 40.12 Submissions by applicant.

An application for certification shall be submitted to the Office of Inmate Grievance Procedure Certification, Department of Justice, Main Justice Building, Washington, D.C. 20530, and shall contain the following:

(a) *Written statement*—A written statement describing the grievance procedure, including a brief description of the institution or institutions covered by the procedure, with accompanying plans for or evidence of implementation in each institution.

(b) *Instructional materials*—A copy of the instructional materials for inmates and employees regarding use of the grievance procedure together with a description of the manner in which such materials are distributed, a description of the oral explanation of the grievance procedure, including the circumstances under which it is delivered, and a description of the training provided to employees and inmates in the skills necessary to operate the grievance procedure.

(c) *Form*—A copy of the form used by inmates to initiate a grievance and to obtain review of the disposition of a grievance.

(d) *Information regarding past performance*—For a procedure that has operated for more than one year at the time of the application, the applicant shall submit information regarding the number and types of grievances filed over the preceding year, the disposition of the grievances with sample responses from each level of decision, the remedies granted, evidence of compliance with time limits at each level of decision, and a description of the role of inmates and employees in the formulation, implementation, and operation of the grievance procedure.

(e) *Plan for collecting information*—For a procedure that has operated for less than one year at the time of the application, the applicant shall submit a plan for collecting the information described in paragraph (d) of this section.

(f) *Assurance of confidentiality*—A description of the steps taken to ensure the confidentiality of records of individual use of or participation in the grievance procedure.

(g) *Evaluation*—A description of the plans for periodic evaluation of the grievance procedure, including identification of the group, individuals or individual who will conduct the evaluation and identification of the person or entity not under the control or supervision of the institution who will review the evaluation, together with two copies of the most recent evaluation, if one has been performed.

(h) *Public participation*—A list of all local agencies, interested persons and groups that have received a copy of the grievance procedure submitted to the Attorney General.

§ 40.13 Notice of intent to apply for certification.

The applicant shall publish notice of its intent to request certification in at least one newspaper that receives general circulation in the vicinity of each institution to be covered by the application. The notice shall invite comments regarding the grievance procedure and direct them to the Attorney General. A similar notice shall be posted within each institution to be covered by the application.

§ 40.14 Review by the Attorney General.

The Attorney General shall review and respond to each application as promptly as the circumstances, including the need for independent investigation and consideration of the comments of agencies, and interested groups and persons, permit.

§ 40.15 Conditional certification.

If, in the judgment of the Attorney General, a grievance procedure that has been in existence less than one year is at the time of application in substantial compliance with the standards promulgated herein, the Attorney General shall grant conditional certification for one year or until the applicant satisfies the requirements of § 40.16, whichever period is shorter.

§ 40.16 Full certification.

If, in the judgment of the Attorney General, a grievance procedure that has been in existence longer than one year

at the time of application is in substantial compliance with the standards promulgated herein, full certification shall be granted. Such certification shall remain in effect unless and until the Attorney General finds reasonable cause to believe that the grievance procedure is no longer in substantial compliance with the minimum standards and so notifies the applicant in writing.

§ 40.17 Denial of certification.

If the Attorney General finds that the grievance procedure is not in substantial compliance with the standards promulgated herein, the Attorney General shall deny certification and inform the applicant in writing of the area or areas in which the grievance procedure or the application is deemed inadequate.

§ 40.18 Reapplication after denial of certification.

An applicant denied certification may resubmit an application for certification at any time after the inadequacy in the application or the grievance procedure is corrected.

§ 40.19 Suspension of certification.

(a) *Reasonable belief of non-compliance.* If the Attorney General has reasonable grounds to believe that a previously certified grievance procedure may no longer be in substantial compliance with the minimum standards, the Attorney General shall suspend certification. The suspension shall continue until such time as the deficiency is corrected, in which case certification shall be reinstated, or until the Attorney General determines that substantial compliance no longer exists, in which case, except as provided in paragraph (b) of this section, the Attorney General shall withdraw certification pursuant to § 40.20 of this part.

(b) *Defect may be readily remedied; good faith effort.* If the Attorney General determines that a grievance procedure is no longer in substantial compliance with the minimum standards, but has reason to believe that the defect may be readily corrected and that good faith efforts are underway to correct it, the Attorney General may suspend certification until the grievance procedure returns to compliance with the minimum standards.

(c) *Recertification after suspension pursuant to paragraph (a).* The Attorney General shall reinstate the certification of an applicant whose certification was suspended pursuant to paragraph (a) of this section upon a demonstration in writing by the applicant that the specific deficiency on which the suspension was based has been corrected or that the information that caused the Attorney General to suspend certification was erroneous.

(d) *Recertification after suspension pursuant to paragraph (b).* The Attorney General shall reinstate the certification of an applicant whose certification has been suspended pursuant to paragraph (b) upon a demonstration in writing that the deficiency on which the suspension was based has been corrected.

(e) *Notification in writing of suspension or reinstatement.* The Attorney General shall notify an applicant in writing that certification has been suspended or reinstated and state the reasons for the action.

§ 40.20 Withdrawal of certification.

(a) *Finding of non-compliance.* If the Attorney General finds that a grievance procedure is no longer in substantial compliance with the minimum standards, the Attorney General shall withdraw certification, unless the Attorney General concludes that suspension of certification under § 40.19(b) of this part is appropriate.

(b) *Notification in writing of withdrawal of certification.* The Attorney General shall notify an applicant in writing that certification has been withdrawn and state the reasons for the action.

(c) *Recertification after withdrawal.* An applicant whose certification has been withdrawn and who wishes to receive recertification shall submit a new application for certification.

§ 40.21 Contemplated change in certified procedure.

A proposed change in a certified procedure must be submitted to the Attorney General thirty days in advance of its proposed effective date. The Attorney General shall review such proposed change and notify the applicant in writing before the effective date of the proposed change whether such change will result in suspension or withdrawal of the certification of the grievance procedure.

§ 40.22 Notification of court.

The Attorney General shall notify in writing the Chief Judges of the United States Court of Appeals and of the United States District Court(s) within whose jurisdiction the applicant is located of the certification, suspension of certification, withdrawal of certification and recertification of the applicant's grievance procedure. The Attorney General shall also notify the court of the certification status of any grievance procedure at the request of the court or any party in an action by an adult inmate pursuant to 42 U.S.C. 1983.

§ 40.23 Significance of certification.

Certification of a grievance procedure by the Attorney General shall signify only that on the basis of the information submitted, the Attorney General believes the grievance procedure is in substantial compliance with the minimum standards. Certification shall not indicate approval of the use or application of the grievance procedure in a particular case.

Appendix A—Commentary

Section 40.2 Adoption of procedures.

The essential feature of this standard is the requirement that the grievance procedure be adopted in writing. Written grievance procedures provide assurances to inmates that established procedures exist for processing, reviewing, and resolving their complaints. They also assist institutional administrators and staff by providing guidance regarding the proper handling of inmate complaints.

Section 40.3 Communication of procedures—written and oral explanation.

This standard is intended to ensure that the institution takes reasonable steps to communicate how and when to use the grievance procedure to the inmates. The standard incorporates the requirement of 42 U.S.C. 1997e that inmates and employees participate in the formulation and implementation of the grievance procedure. The type of participation is left to the correctional agency or institution to determine, but it should be of such a nature as to enhance the credibility of the grievance mechanism by fostering a sense of inmate and employee responsibility for the final design and operation of the procedure. For further comment on the need to foster inmate and employee responsibility see Commentary on § 40.7(b) below.

Research on existing grievance mechanisms sheds important light on the need for inmate familiarity with those mechanisms.[1] Many inmates may not develop

[1] The relevant research is limitd to general surveys of grievance mechanisms presently in use and evaluations of their effects on such factors as inmate and staff attitudes concerning the resolution of complaints, patterns of use by inmates, and dispositions of grievances resolved. Very few of the studies gather extensive empirical data on the operation and effects of grievance mechanisms. Those that do are limited to individual correctional institutions or systems. Thus, extensive empirical comparisons between the effects of different types of grievance mechanisms on prisons and inmates are not available.

Most of the research simply describes the operation of grievance mechanisms, and inmate and staff perceptions of their fairness and efficiency. It is not possible to draw firm conclusions from this research about the effectiveness of grievance mechanisms in reducing levels of tension or violence in institutions, or even about whether there are significant systematic differences among grievance mechanisms in their effects on prisons. Accordingly, discussion of research in this commentary only summarizes the research findings

Footnotes continued on next page

extensive knowledge of their rights under grievance mechanisms or of the specific procedures used in filing grievances or appealing grievance decisions.[2] Formal orientation involving inmates and staff may reduce apprehension when the grievance mechanisms are introduced, increase awareness of their existence, and stimulate their use in settling disputes.[3]

Thorough orientation and training about grievance mechanisms is necessary for both inmates and staff. Orientation for inmates might involve both inmate and staff participation, and should attempt to increase inmates' knowledge of rules and procedures in filing grievances and appealing grievance decisions. Training for employees and inmates should cover the skills necessary to participate in and, where appropriate, operate the grievance procedure. Active involvement and support by the institutional administration in training and orientation is important.[4]

Section 40.4 Accessibility.

An inmate must have access to the grievance procedure, regardless of personal impairments or handicaps. The purposes of a grievance procedure cannot be fulfulled if certain classes of inmates are prevented from using it. The provisions of 42 U.S.C. 1997e apply to adult inmates convicted of crimes. Although juveniles and pretrial detainees are excluded, as a matter of sound policy and equal treatment, institutions containing mixed populations are encouraged to open the grievance procedure to all inmates, despite the ability of inmates not covered by the Act to proceed directly to court.

Section 40.5 Applicability.

The range of complaints to which the grievance procedure applies and the types of remedies that the procedure affords are fundamental features of the design of a grievance mechanism. Pursuant to 42 U.S.C. 1997e, a court may stay any inmate action filed under 42 U.S.C. 1983 for 90 days to allow exhaustion of a grievance procedure. If exhaustion is to be a realistic alternative in such cases, the grievance procedure must be applicable to many complaints that could be raised in an action under section 1983 and the relief available under the procedures must approximate the remedies available under the statute. Otherwise, a major purpose of the "Civil Rights of Institutionalized Persons Act"—to permit non-judicial resolution of inmate grievances—may not be realized.

Grievance mechanisms should explicitly state what matters or categories of complaints are subject to review under the procedure in order to ensure proper and necessary use of the procedure. General examples of such matters include institutional policies, applications of the policies, actions by employees or other inmates, and living conditions within the institution. There also should be explicit statements of matters not subject to review. Applicants are encouraged to use the grievance procedure to determine whether a complaint is grievable. The grievance procedure shall not supplant disciplinary procedures which are subject to certain constitutional safeguards.

Section 40.6 Remedies.

The requirement that grievance procedures afford meaningful remedies is essential. The procedures should clearly specify the types of remedies that are within their scope and authority. Examples of such remedies include monetary relief, restitution of a grievant's property, correction of records, reclassification, and changes in institutional policies or practices that are the subject of grievances. As stated previously, if the purposes of the Civil Rights of Institutionalized Persons Act are to be fulfilled, grievance procedures must be empowered to award a broad range of remedies.

Section 40.7 Operation and decision.

a. *Initiation.* All inmates should be permitted to file grievances. The requisite materials should be readily accessible to every inmate in the institution, regardless of classification or disciplinary status. Since the effectiveness of a complaint may turn on the ability of the inmate to express the complaint in writing, inmates with handicaps or minimal or diminished capacity for written expression must be afforded assistance in presenting their grievances. However, this standard should not be read as requiring the provision of legal representation for inmates.

In filing grievances, inmates should not be forced to comply with technicalities of form or detail, but should be required only to state their complaint in a simple, straight forward manner. The use of a standard form will assist the simplification of the filing process and assist decision-makers by structuring the presentation of the grievance.

b. *Inmate and employee participation.* Taken in conjunction with § 40.2 of this part, this standard requires inmate and employee participation in the formulation, implementation and operation of the grievance procedure. The exact nature of the participation is left to each applicant for certification with the caveat that the participation must be such as to promote the credibility and use of the grievance procedure.

Inmate participation in an advisory capacity is mandated at the most decentralized level reasonably possible. This requirement is intended to ensure that inmates play a role in the initial consideration of their grievances. Such participation will allow full airing of the dispute at the earliest possible time and promote prompt and efficient settlement of grievances.

Examples of inmate involvement include participation in designing grievance procedures, reviewing the overall operation of the grievance system and working with staff to assure the system is successful and credible. Staff and administration involvement may include participation in the design of grievance procedures, and in dispute resolution through the grievance mechanisms. Administrators may also serve in reviewing capacities.

As a reflection of the concern for confidentiality express in Standard IV(b), this Standard allows an inmate to request that other inmates not participate in the actual resolution of a grievance filed by the inmate. Barring such a request, inmates may have other inmates participate in an advisory capacity in the resolution of their disputes, although the standard does not require that any inmates have access to confidential records. A request that inmates not participate in the resolution of a dispute shall be made by the inmate who filed the grievance and may be withdrawn before the grievance procedure is completed.

Many existing grievance procedures are designed to include inmate participation. A recent survey indicates that under some programs inmates accept and screen incoming grievances, and work together with staff in settling inmates' disputes.[5] The survey also showed that almost one-third of the programs that involve prisoner participation and hearings on grievances give prisoners "decison-making" roles.[6]

There is reason to believe that prisoners in program with participatory grievance mechanisms may be more willing to use the grievance mechanism.[7] A study by Dillingham and Singer suggests that more prisoners feel that complaints are handled fairly and satisfactorily under participatory grievance procedures (those with inmate participation and external review) than do under nonparticipatory procedures.[8] This finding may be due in part to the higher rates of dispositions favoring inmates in correctional systems using participatory grievance procedures.[9]

Another study indicates that prisoners and correctional officers may often feel participatory grievance procedures achieve fair, useful and expeditious resolution of prisoners' complaints.[10] Correctional administrators also feel that, as a general matter, grievance mechanisms are effective in resolving prisoner complaints.[11] Some

---

Footnotes continued from last page that are related to the central points of discussion and that are strongly supported across the literature cited.

[2] California Youth Authority, *Final Evaluation of Ward Grievance Procedure at Karl Holton School*, at 26. (1974) [hereinafter cited as California Youth Authority Report].

[3] M. Keating, V. McArthur, M. Lewis, K. Sebelvis, and L. Singer, *Grievance Mechanisms in Correctional Institutions* (1975) [hereinafter cited Keating et al.]; J. Hepburn, J. Lave, and M. Becker, *To Do Justice: An Analysis of the Development of Inmate Grievance Resolution Procedures and a Final Report for the Center for Community Justice* (1978) [hereinafter cited as Hepburn et al.].

[4] Keating et al., *supra* note 3, at 30.

[5] Dillingham and Singer, *Complaint Procedures in Prisons and Jails: An Examination of Recent Experience*, pp. 22-23 (1980).

[6] *Id.*

[7] Keating et al., *supra* note 3, at 9.

[8] Dillingham and Singer, *supra* note 5, at 51, 56 Table XI, XIII.

[9] Id. at 54.

[10] Dillingham, *Right to Be Heard: An Evaluation of the Ward Grievance Procedure in the California Youth Authority*, at 61, 62 Tables 20-21 (1978); Dillingham and Singer, *supra* note 5, at 51, 52; Keating et al., *supra* note 3, at 49-60. Keating et al.'s analysis of 17 correctional systems indicates that more prisoners in programs with participatory grievance procedures feel that disputes are settled in a timely way than prisoners in programs with other grievance mechanisms.

[11] Dillingham, and Singer, *supra* note 5, at 21, 26, 28, 32.

administrators indicate that prisioner participation in grievance mechanisms enables prisoners to question and challenge policies more easily, more expeditiously, and at lower levels of decision-making within the institution.[12] Hepburn et al. report that line-officers and staff involved in participatory grievance procedures, who may initially resist involvement due to concerns over weakening authority and reduced autonomy, may come to believe that the procedures improve working conditions by (1) reducing prisoner hostility toward staff, (2) clarifying ambiguous or contradictory policies, and (3) effecting change in unpopular or unenforceable institutional rules.[13] In brief, available evidence shows that grievance mechanisms that provide for inmate and staff involvement tend to be perceived as fair and effective, and thus achieve greater credibility.

c. *Investigation and consideration.* A grievance procedure must have a method for investigating the allegations contained in a grievance and establishing the facts necessary to a just resolution. The method need not be modelled on a strict adversarial approach to grievance resolution, but it may be necessary for inmates to be interviewed personally regardin their grievances.

To enhance the impartiality of grievance decisions, the Standard requires that employees and inmates who are the subject of grievances or were involved in the events that produced the grievance not participate in resolving the grievance.

d. *Reasoned, written responses.* The requirement that grievances receive reasoned, written responses may aid in ensuring that grievances are considered carefully by staff and administrators and may inform administrators whether institution policies and procedures are appropriate and are being implemented properly. Equally important is the possible effect upon an inmate of a reasoned, written response. It will give the inmate some assurance that the grievance has been reviewed and should serve to clarify the institutional policy or practice that was the subject of the grievance. Furthermore, the requirement of a written response provides administrators with a document that identifies the outcome of an inmate's grievance. Thus, reasoned, written responses may enhance inmates' perceptions that they have been treated fairly, and may assist administrators in operating the facility.

There is little research concerning responses to grievances. Dillingham and Singer note that summary replies to grievances such as "Request denied—contrary to policy" were often observed in their analysis of grievance records.[14] Dillingham's analysis of the California Youth Authority grievance procedure indicates that mandatory provision for explanations of grievance decisions has resulted in reasoned replies.[15]

e. *Fixed time limits.* The credibility and practical success of grievance procedures may be enhanced if the procedures result in prompt responses to inmates' complaints. Fixed time limits help to ensure inmates that complaints will not be put off by decision-makers. The standard provides that time limits may not be exceeded unless an inmate agrees in writing to an extension. If the inmate has not agreed to an extension and no response is forthcoming during the prescribed period, the inmate may move to the next stage of review. The standard would not affect the ability of correctional systems and institutions to impose stronger penalties for delay among decision-makers.

Surveys of grievance procedures indicate that a great majority impose time limits on replies to inmates' complaints.[16] Many apply these time limits to all levels of the grievance procedure.[17] There is limited information on the comparative efficiency of grievance procedures with fixed time limits and other grievance mechanisms. Dillingham and Singer indicate there may be more complaints filed per prisoner under grievance procedures allowing inmate participation and employing fixed time limits.[18] Hepburn et al. conclude that the grievance procedure with fixed time limits implemented in South Carolina is more efficient than the state ombudsman program handling similar types of complaints.[19]

In spite of fixed time limits, delays in processing grievances may occur in most grievance mechanisms. Failures to comply with time limits in California's Ward Grievance Procedure, for example, occur most frequently during appellate reviews of grievances.[20] Serious delays may also attend upon the introduction of grievance procedures, as was the case following the introduction of a grievance procedure in New York. There, the most frequent delays took place at the initial hearing stages, as a result of heavy filing of grievances and the difficulty of obtaining attendance at hearings of prisoners subject to special conditions of confinement.[21]

f. *Review.* Review of the disposition of inmate grievances may ensure that institutional policies are applied fairly and objectively and that the procedural guarantees of the grievance procedure itself are observed. The standard states two different minimum requirements for review. For grievances that are based on incidents occuring within the institution or that challenge practices, policies or conditions that only pertain in a specific institution, the standard mandates review by a person or entity not under the control or supervision of the institution. For grievances that challenge policies or practices that apply throughout the correctional system, the standard requires an independent review—that is, by a person or entity wholly outside the correctional system. The review should ordinarily be a step in the grievance procedure. Evidence from the states' experience shows that this step is rarely invoked. Accordingly, fears that heavy burdens may result from this process appear to be unsupported.

Although correctional administrators are expected to be capable of fair and detached consideration of grievances, a structure that ensures that administrators will not be the only individuals reviewing their own policies will enhance the credibility of the grievance procedure among inmates and will furnish administrators with impartial input into their dispositions of grievances. Although the standard directs correctional agencies to consider the views of the reviewing body or individual, it does not require that the views be binding. Review by a correctional agency of the disposition of a grievance by an institution official will be binding.

It is important to recognize that the standard dictates the minimum level of independence of review. Obviously, independence and its appearance increase as the reviewing authority gains distance from the institution and the correctional structure. For instance, greater independence would be achieved by giving reviewing authority to an individual or group which is separate from the executive branch of government. An example of this would be legislatively appointed commission or ombudsman. Still greater independence could be achieved by giving the reviewing commission or official binding authority over grievance decisions and other matters pertaining to grievance decisions. While this type of review may be perceived as challenging the authority of correctional administrators, it might improve the credibility of grievance mechanisms among prisoners and result in increased use of the mechanism in settling disputes. No grievance mechanisms currently permit such a degree of independent review of grievance decisions.[22]

A variety of mechanisms exist, however, that employ impartial or "outside" review by individuals or groups not under the direct supervision of the institution or department of corrections. Prisoners may be more likely to use these grievance mechanisms with impartial review and more likely to perceive them as fair and responsive to their complaints than grievance mechanisms with other forms of review.[23] Mechanisms affording impartial review rely on several different types of reviewers: grievance commissions consisting of persons not

[12] Hepburn et al., *supra*, note 3, at 406–407.

[13] Id. at 406; J. Hepburn and J. Laue, "Prisoner Redress: An Analysis of an Inmate Grievance Procedure," 26 *Crime and Delinquency* 162. Hepburn and Laue suggest that prisoners and staff should have equal roles in resolving grievances.

[14] Dillingham and Singer, *supra* note 5, at 65.

[15] Dillingham, *supra* note 10, at 38–40.

[16] Dillingham and Singer, *supra* note 5, at 23.

[17] *Id.*, at Table V.

[18] *Id.*, at 45 Chart 1.

[19] Hepburn et al., *supra* note 3, at 295–299.

[20] Keating et al., *supra* note 3, at 49–60; Hepburn et al. at 254, 345.

[21] Dillingham, *supra* note 10, at 44 Table 15.

[22] Dillingham and Singer, *supra* note 5, at 23, 27; Keating et al., *supra* note 3, at 35–47.

[23] Keating et al., *supra* note 3, at 14; Dillingham and Singer, *supra* note 5, at 43–57. Dillingham and Singer summarize their analysis of interviews with prisoners and staff and examination of records in ten prison systems using different types of grievance mechanisms: "Procedures have a greater chance of success if they include inmates and line staff in resolving complaints, permit appeal to outsiders seen as impartial and adhere to established time limits and other procedural requirements." (at 43) While Dillingham and Singer's findings do not indicate that appellate review by external authorities alone ensures effective dispute resolution, the findings suggest that external review may be necessary to ensure utilization of grievance mechanisms by prisoners and enhance their perception as fair and timely in resolving disputes.

affiliated with correctional agencies; ombudsmen acting in conjunction with administrative grievance procedures; the state Attorney General's office acting in the capacity of complaint examiner; arbitration panels; and professional arbitrators acting as mediators in the final stage of grievance appeals. Under all grievance mechanisms using outside review, the reviewing bodies make advisory recommendations to correctional administrators with respect to final settlement of grievances.

Section 40.8 Emergency procedures.

A special emergency grievance procedure is necessary to handle matters that will inevitably arise that would result in serious harm to an inmate or a threat to the safety or security of the institution if they were not treated on an expedited basis. It is important, however, that the procedure state explicitly what matters will be subject to emergency treatment so that inmates may avail themselves of the procedure and frivolous filings will be discouraged and screened out quickly when they occur. Emergency grievances must reach a decisionmaker with authority to take corrective action without passing through preliminary levels of substantive review.

Prisoners in systems with emergency provisions may file "emergency" grievances relatively frequently. For example, forty percent of all grievances filed in the California Youth Authority's system in 1977 were initially declared "emergencies." [24] Although the heavy filing of such grievances may be a burden on the operation of the overall grievance mechanism, the provision for handling grievances on an emergency basis may serve as a "safety valve" for prisoners' immediate reactions to institutional problems as well as a mechanism for settling problems which generally require immediate relief.[25]

Section 40.9 Reprisals.

Reprisals or fear of reprisals may discourage use of the grievance mechanism. No inmate should be subjected to adverse consequences or threats as a result of having invoked or participated in the grievance procedure. Inmates must, therefore, be given a remedy against possible reprisals, at least to the extent of being permitted to complain of reprisals through the grievance procedure. In addition, employees of the institution should be informed that reprisals against inmates will be viewed seriously by the administrators of the institution and correctional agency and met with specific penalties. And, since employees must also be encouraged to participate freely in the grievance procedure, they should receive assurances against reprisals by administrators.

Research on grievance procedures discloses no evidence of formal reprisals against grievants.[26] Evidence of fear of reprisal among prisoners, however, is clear. Approximately, one-in-six prisoners in the California Youth Authority's initial experiment with grievance procedures reported reluctance to use the procedure due to fear of negative consequences.[27] Similar attitudes have been observed among prisoners in New York and South Carolina.[28] A reprisal feared by many is unfavorable intervention in parole decisions.[29] Such fear may harm the credibility of grievance procedures and limit their usefulness.

Standards for grievance mechanisms cannot be expected to prevent all informal reprisals against grievants, but formal reprisals by staff and administration may be deterred by the remedies discussed above in combination with the safeguards contained in other standards, such as those ensuring the confidentiality of grievance files. To minimize informal reprisals, grievance mechanisms might also provide for immediate independent review of allegations of reprisals.

Section 40.10 Records—nature; confidentiality.

a. *Nature.* The systematic collection of information regarding the operation of the grievance mechanism is essential for administrators if they are to ensure that the procedure is operating fairly, effectively and according to its own internal requirements. Examples of information which might be collected include types of grievances filed, nature of disputed issues, final dispositions of grievances, levels of review required, compliance with time limits, and reasons for dispositions of grievances.[30]

b. *Confidentiality.* To prevent reprisals, it is important to keep records of individual inmate use and participation in grievance mechanisms out of the reach of fellow inmates and staff. Similarly, to prevent individuals or bodies making parole decisions from considering inmate use or involvement in grievance procedures as a factor in their deliberations, strict precautions must be taken to ensure that such material is not available to them. Fear on the part of inmates that use of or participation in grievance procedures could affect release decisions negatively may restrict use of the grievance procedure. In addition, fear that testimony or evidence produced during grievance proceedings will become known to persons making release decisions may restrict inmate participation in the proceedings and impede efforts to develop fully and accurately the factual bases of grievances.

Although institutional records are exempted from the disclosure requirements of freedom of information acts in many States, it is not the intent of this standard to override such disclosure requirements where they exist under State law.

Section 40.11 Evaluation.

Only through periodic evaluations can administrators and outside reviewers guarantee that grievance procedures serve the institutional purposes of administrators while also resolving inmates' grievances fairly. An important concern is the availability of information on grievance processing. Development and implementation of record-keeping as discussed in Standard IX will aid in conducting informed evaluations. The standard requires review of the evaluation by a person or group that is not associated with the institution to assist the administrators of the grievance procedure in maintaining compliance with the standards. The evaluation and the review are to be submitted to the Attorney General to assist him in acquitting his obligation to review certified procedures for continuing compliance with the standards.

An additional concern involves criteria used in evaluations to measure the effectiveness of grievance mechanisms. Criteria should be based upon the specific objectives of the grievance mechanism. Due to the inherent difficulties in determining whether grievance mechanisms meet the general objectives of reducing levels of frustration, tension, and violence among prisoners, Keating et al. recommend that criteria of effectiveness simply reflect prisoners' use of grievance mechanisms and whether such use results in clarification and changes in institutional policies.[31]

[FR Doc. 80-36970 Filed 11-26-80; 8:45 am]

BILLING CODE 4410-01-M

[24] Hepburn et al., *supra* note 3, at 100–101.

[25] *Id.*, at 113.

[26] Hepburn et al., *supra* note 3, at 405.

[27] California Youth Authority Report, *supra* note 2.

[28] Hepburn et al., *supra* note 3, at 162, 281.

[29] Keating et al. *supra* note 3, at 15.

[30] Hepburn et al. *supra* note 3, at 262–264. The standard allows inmates and staff to handle records where necessary for clerical purposes. The most effective method to implement this Standard may be to establish a separate record-keeping system for inmate grievance records. Whenever possible, such records should not be managed or handled by inmates.

[31] Keating et al. *supra* note 3, at 31.

DEPARTMENT OF TRANSPORTATION

Coast Guard

33 CFR Part 117

[CGD 80-106]

Drawbridge Operation Regulations; Taylor Creek, Fla.

AGENCY: Coast Guard, DOT.

ACTION: Proposed rule.

SUMMARY: At the request of the citizens of Okeechobee City, the Coast Guard is considering amending the regulations governing the operation of the Taylor Creek Bridge on U.S. Highway 441 across Taylor Creek, mile 0.23 to require the draw to open on signal if at least 2 hours notice is given to the local representative. The draw of the bridge presently opens on signal if at least 24 hours advance notice is given to the representative in Fort Pierce, Florida. This proposal is being considered due to an increase in navigation.

DATE: Comments must be received on or before December 29, 1980.

ADDRESS: Comments should be submitted to and are available for

examination from 7:30 a.m. to 4 p.m., Monday through Friday, at the office of the Commander (oan), Seventh Coast Guard District, 51 Southwest First Avenue, Miami, Florida 33130.

FOR FURTHER INFORMATION CONTACT: James R. Kretschmer, Bridge Administrator, Bridge Section (oan), Room 1006, Federal Building, 51 Southwest First Avenue, Miami, Florida 33130, telephone: (305) 350-4108.

SUPPLEMENTARY INFORMATION: Interested persons are invited to participate in this proposed rule making by submitting written views, comments, data or arguments. Persons submitting comments should include their name and address, identify the bridge and give reasons for concurrence with or any recommended change in the proposal. Persons desiring acknowledgment that their comments have been received should enclose a stamped self-addressed envelope or post card.

The Commander, Seventh Coast Guard District, will evaluate all communications received and determine a course of final action on the proposal. The proposed regulations may be changed in the light of comments received.

DRAFTING INFORMATION: The principal persons involved in drafting this proposal are: Ensign Jane L. Hamilton, Bridge Administration Officer, Office of Aids to Navigation Bridge Section, and Lieutenant John M. Griesbaum, Office of Commander, Seventh Coast Guard District, Legal Office.

Discussion of the Proposed Regulation

The proposed regulation is being considered due to the increase of waterborne traffic upon this waterway and the ineffectiveness of the 24 hour advance notice requirement to meet the needs of navigation. Based on the data obtained from Coast Guard investigation during the months of May and June 1979, there has been an increase in waterborne traffic usage from 2 vessels in 1977 to 140 vessels in 1979. The Coast Guard therefore, is presenting this proposal for comment from affected and interested parties.

Present regulations refer to this road as State Road 15; this has been changed to U.S. Highway 441 to reflect the designation by which this road is more commonly known.

In consideration of the foregoing, it is proposed that Part 117 of Title 33 of the Code of Federal Regulations be amended by revising § 117.245(h)(29) to read as follows:

§ 117.245 Navigable waters discharging into the Atlantic Ocean south of and including Chesapeake Bay and into the Gulf of Mexico, except the Mississippi River and its tributaries and outlets, bridges where constant attendance of draw tenders is not required.

* * * * *

(h) * * *

(29) Taylor Creek, U.S. Highway 441, Okeechobee, Florida. The draw shall open on signal if at least 2 hours notice is given to the Florida Department of Transportation Substation Maintenance Yard, Okeechobee, Florida.

* * * * *

(33 U.S.C. 499, 49 U.S.C. 1655(g)(2); 49 CFR 1.46(c)(5), 33 CFR 1.05-1(g)(3))

Dated: 14 November 1980.

B. L. Stabile,

Rear Admiral, U.S. Coast Guard Commander, Seventh Coast Guard District.

[FR Doc. 80-37118 Filed 11-26-80; 8:45 am]

BILLING CODE 4910-14-M

---

33 CFR Part 117

[CGD 80-150]

Drawbridge Operation Regulations; Savannah River, Clyo, Ga.

AGENCY: Coast Guard, DOT.

ACTION: Proposed rule.

SUMMARY: At the request of the Seaboard Coast Line Railroad Company, the Coast Guard is considering amending the regulations governing the operation of the Seaboard Coast Line Railroad drawbridge across the Savannah River at Clyo, Georgia, to require that the draw open on signal from 6:00 a.m. to 11:00 a.m. and from 12:00 noon to 3:00 p.m. and that the draw open on signal at all other times if at least three hours notice is given. Radiotelephone communications will be installed in the bridge tenders house for waterborne communications. If the Seaboard Coastline's request is granted, it will be relieved of the responsibility of providing full-time drawtenders and may still provide for the reasonable needs of navigation.

DATE: Comments must be received on or before December 29, 1980.

ADDRESS: Comments should be submitted to and are available for examination from 7:30 a.m. to 4 p.m., Monday through Friday, at the office of the Commander (oan), Seventh Coast Guard District, 51 Southwest First Avenue, Miami, Florida 33130.

FOR FURTHER INFORMATION CONTACT: James R. Kretschmer, Bridge Administrator, Bridge Section (oan), Room 1006, Federal Building, 51 Southwest First Avenue, Miami, Florida 33130, telephone: (305) 350-4108.

SUPPLEMENTARY INFORMATION: Interested persons are invited to participate in this proposed rule making by submitting written views, comments, data or arguments. Persons submitting comments should include their name and address, identify the bridge and give reasons for concurrence with or any recommended change in the proposal. Persons desiring acknowledgment that their comments have been received should enclose a stamped self-addressed envelope or post card.

The Commander, Seventh Coast Guard District will evaluate all communications received and determine a course of final action on the proposal. The proposed regulations may be changed in the light of comments received.

DRAFTING INFORMATION: The principal persons involved in drafting this proposal are: Ensign Jane L. Hamilton, Bridge Administration Officer, Office of Aids to Navigation Bridge Section and Lieutenant John M. Griesbaum, Office of Commander, Seventh Coast Guard District, Legal Office.

Discussion of the Proposed Regulations

The draw is presently required to open on signal at all times. This change is being considered because there are limited requests for openings during the periods in which advance notice would be required. From 1971 through 1979, an average of one draw opening occurred every three days from 3 p.m. to 6 a.m.

The bridge owner has agreed to the installation and maintenance of radiotelephone communications at the bridge site and the dispatcher's office in Savannah.

In consideration of the foregoing, it is proposed that Part 117 of Title 33 of the Code of Federal Regulations be amended by adding a new paragraph (h)(12-a) immediately after paragraph (h)(12) of § 117.245 to read as follows:

§ 117.245 Navigable waters discharging into the Atlantic Ocean south of and including Chesapeake Bay and into the Gulf of Mexico, except the Mississippi River and its tributaries and outlets; bridges where constant attendance of draw tenders is not required.

* * * * *

(h) * * *

(12-a) Savannah River, mile 60.9, Seaboard Coastline Railroad bridge, Clyo, Georgia. The draw shall open on signal from 6:00 a.m. to 11:00 a.m. and from 12:00 noon to 3:00 p.m. At all other times the draw shall open on signal if at least three hours notice is given.

VHF radiotelephone communications will be maintained at the bridge tenders house and the dispatcher's office in Savannah, Georgia.

* * * * *

(33 U.S.C. 499, 49 U.S.C. 1655(g)(2); 49 CFR 1.46(c)(5), 33 CFR 1.05-1(g)(3))

Dated: 14 November 1980.

B. L. Stabile,

Rear Admiral, U.S. Coast Guard, Commander, Seventh Coast Guard District.

[FR Doc. 80-37117 Filed 11-28-80; 8:45 am]

BILLING CODE 4910-14-M

33 CFR Part 110

[CGD11-80-09]

Special Anchorage Areas; Mission Bay, San Diego, Calif.

AGENCY: Coast Guard, DOT.

ACTION: Proposed rule.

SUMMARY: The Coast Guard proposes to establish, at the request of the City of San Diego Park and Recreation Department, four Special Anchorage Areas within Mission Bay. The areas affected are presently utilized for the anchorage and mooring of pleasure vessels. Designation as Special Anchorage Areas under the control of the City of San Diego Park and Recreation Department Mission Bay Harbor Police will allow for a more orderly and efficient utilization of the water areas.

The areas proposed for designation are well removed from any fairway and are located where general navigation will not endanger or be endangered by unlighted vessels. Establishment of Special Anchorage Areas will eliminate the necessity of displaying anchor lights or sounding fog signals on vessels of not more than sixty-five feet in length while anchored within the area.

DATE: Comments must be received on or before 20 January 1981.

ADDRESSES: Comments should be submitted to Commander, Eleventh Coast Guard District (m), 400 Oceangate, Long Beach, CA 90822. Comments received will be available for examination at the Marine Safety Division, Office of the Commander, Eleventh Coast Guard District, Room 917, Union Bank Building, 400 Oceangate, Long Beach, CA 90822. Normal office hours are between 0730 and 1600, Monday through Friday, except holidays. Comments may be hand delivered to this address.

FOR FURTHER INFORMATION CONTACT: Lieutenant Commander James B. Morris, Marine Safety Division, Eleventh Coast Guard District, Union Bank Building, 400 Oceangate, Long Beach, CA 90822, (213) 590-2301.

SUPPLEMENTARY INFORMATION: Interested persons are invited to participate in this proposed rulemaking by submitting written views, data, or arguments. Persons submitting comments should include their name and address, identify this notice (CGD11-80-09), the specific section of the proposal to which their comments apply, and give reasons for the comment. Persons desiring acknowledgement that their comment has been received should enclose a stamped, self-addressed postcard or envelope.

All comments received before the expiration of the comment period will be considered before final action is taken on this proposal. No public hearing is planned but one may be held if written requests for a hearing are received and it is determined that the opportunity to make oral presentations will aid the rulemaking process.

DRAFTING INFORMATION: The principal persons involved in drafting the proposal are: Lieutenant Commander James B. Morris, Project Officer, Marine Safety Division, Eleventh Coast Guard District; and Commander Rene N. Roussel, Project Attorney, District Legal Office, Eleventh Coast Guard District.

Discussion of the Proposed Rule: Article 11(c) of the Navigation Rules for Harbors, Rivers and Inland Waters, Inland Rules (33 USC 180) provides for the establishment of "Special Anchorage Areas" by the Secretary of Transportation (delegated to the Coast Guard in 49 CFR 1.05-1(g)). The designation as a Special Anchorage Area exempts anchored vessels not more than sixty-five feet in length from displaying the required single anchor light or sounding the rapidly ringing bell fog signal.

Previously vessels have anchored in the proposed areas with verbal permission from the Mission Bay Harbor Police to not display the required light when at anchor. Designation as a Special Anchorage Area will allow for orderly and efficient management of the water areas.

A preliminary environmental evaluation has been completed and an initial determination has been made that this proposed action would result in no adverse impact on the quality of the human environment.

Summary of Draft Evaluation: These proposed regulations are considered to be nonsignificant in accordance with the guidelines set out in the Policies and Procedures for Simplication, Analysis, and Review of Regulations (DOT Order 2100.5 of 52280). An economic evaluation of the proposal has not been conducted since its impact is expected to be minimal. The amendment imposes no economic burden and benefits all small vessel owners since they will not have to carry or display anchor lights or sound fog signals when anchored in the Special Anchorages.

In consideration of the foregoing it is proposed to amend Chapter I of Title 33 Code of Federal Regulations as follows:

PART 110—ANCHORAGE REGULATIONS

1. By adding a new § 110.91 in Subpart a to read as follows:

§ 110.91 Mission Bay, California.

(a) Area M-1. In San Juan Cove, the entire water area west of a line drawn from Santa Clara Point Light; latitude 32-46-53.6N., longitude 117-14-52.5W.; to El Carmel Point North Light; latitude 32-46-48.0N., longitude 117-14-50.1W.

Note.—Control over the anchoring of vessels and the placing of temporary moorings in this area is exercised by the City of San Diego Park and Recreation Department pursuant to local ordinances.

(b) Area M-2. In Santa Barbara Cove, the entire water area west of a line drawn from El Carmel Point South Light; latitude 32-46-40.0N., longitude 117-14-47.0W.; to Bahia Point Light; latitude 32-46-33.5N., longitude 117-14-45.5W.

Note.—Control over the anchoring of vessels and the placing of temporary moorings in this area is exercised by the City of San Diego Park and Recreation Department pursuant to local ordinances.

(c) Area M-3. In Mariners Basin, the entire water area west of a line drawn from mariners point Light; latitude 32-45-49.2N., longitude 117-14-42.9W.; to Mission Point Light; latitude 32-45-43.7N., longitude 117-14-41.9W.

Note.—Control over the anchoring of vessels and the placing of temporary moorings in this area is exercised by the City of San Diego Park and Recreation Department pursuant to local ordinances.

(d) Area M-4. in Quivira Basin, the water area enclosed by that portion of a circle of 45 yard radius from Quivira Basin Light 2; latitude 32-45-42.8N., longitude 117-14-25.6W.; through the arc from 354°T to 088°T.

Note.—This area is reserved for vessels under impound or control of the City of San Diego Park and Recreation Department Mission Bay Harbor Police.

(77 Stat. 116 (33 USC 180); 49 CFR 1.46(c)(2); 33 CFR 1.05-1(g))

Dated: November 5, 1980.

A. P. Manning,

Rear Admiral, U.S. Coast Guard Commander, Eleventh Coast Guard District.

[FR Doc. 80-37116 Filed 11-26-80; 8:45 am]

BILLING CODE 4910-14-M

POSTAL SERVICE

39 CFR Part 111

Proposed Expansion of the ZIP Code System by Adding a Hyphen and Four New Numbers

AGENCY: Postal Service.

ACTION: Proposed rule.

SUMMARY: This proposal would amend postal regulations that describe the ZIP Code system as a preliminary step in the proposed expansion of the existing five-digit ZIP Code by adding a hyphen and four new numbers. The existing five-digit ZIP Code has been of great assistance in the processing of mail from the point of entry into the postal system to the postal facility serving the addressee. The existing 5-digit system is unable, however, to direct mail to the delivery route of the addressee. This task is performed by clerks who are required to memorize the addresses delivered by each letter carrier. Through the expanded ZIP Code, it will be possible to automate the sorting of a large part of the mail directly to the delivery route of the addressee, thereby eliminating the need for most of the memorization required today. This increased use of machine sorting will slow increases in postal costs and postage rates. A draft regulatory analysis is attached as an Appendix to this document.

DATE: Comments must be received on or before January 5, 1981.

ADDRESS: Written comments should be sent or delivered to the Director, Office of ZIP Code Expansion, Room 6624, U.S. Postal Service, 475 L'Enfant Plaza West, SW., Washington, D.C. 20260. Copies of all written comments will be available for public inspection and photocopying between 9:00 AM and 4:00 PM, Monday through Friday, in Room 6624, U.S. Postal Service Headquarters, at the above address.

FOR FURTHER INFORMATION CONTACT: Mr. E. T. Dewey, (202) 245-5019.

SUPPLEMENTARY INFORMATION:

Background

On June 3, 1980, the Postal Service published in the Federal Register a notice and a request for comments on the Plan to Implement a Nine-Digit ZIP Code System. 45 FR 37571. Comments were received from 20 organizations or individuals. One of the commenters, a major mailer, said that it "supports the concept of ZIP Code expansion as a logical step toward improved efficiency in mail processing through use of advanced technology". Not all commenters, however, supported our proposal, and a number of commenters requested additional information about various details of the proposal, or raised questions such as the following, which we will answer here:

Comments and Postal Service Responses

1. *What purpose does the Postal Service have in encouraging use of the expanded ZIP Code several years before the equipment will become available to make use of it in mail processing?* We know from experience that a program such as this cannot become a reality overnight. The five-digit ZIP Code was introduced in 1963. It took a number of years before major mailers and the general public began to use the ZIP Code in significant numbers. Today, the level of public cooperation is excellent, with approximately 97 percent of all mail bearing a ZIP Code. In addition, it should be noted that the existing timetable (which may be optimistic) schedules the first wave of optical character readers (OCR's) and bar code readers (BCR's) to be delivered to certain of the largest post offices in late 1981, which is a relatively short time after computer tapes of the expanded ZIP Code will be made available to mailers who have the capability for computerized list conversion.

2. *What effect will the expanded ZIP Code have on the carrier route presort program and on the presort programs and discounts generally?* The expanded ZIP Code program does not include any changes in the current presort programs. Presorting by mailers to carrier routes will continue to be encouraged. The proportion of business mail for which carrier route presorting is feasible is small. Accordingly, we believe that over the long term the continued utility of the presort programs will be determined by mailers as they choose the best program to meet their needs.

3. *Under what circumstances would the expanded ZIP Code be made mandatory?* The expanded ZIP Code will not be mandatory. Postal customers will retain an option to use it or not.

4. *In what ways will mailers who fail to use the expanded ZIP Code suffer disadvantages or those who use it receive favored treatment?* There will be no penalty for those who do not use the expanded ZIP Code. The same service standards will apply for both five- or nine-digit coded mail, although the percentage of achievement of service standards for nine-digit coded mail may rise. The only disadvantage from not using the expanded ZIP Code will be the increased mail processing costs that could have been avoided. These costs could result in higher postage rates.

5. *Will there be incentives for using the expanded ZIP Code?* We recognize that incentives will encourage mailers to use the expanded ZIP Code. However, the precise nature of any incentives has not yet been determined. Accordingly, the Postal Service welcomes public comments on the matter of incentives.

6. *Has a study been made to determine whether it will be cost effective for business mailers to switch to the expanded ZIP Code?* No formal study devoted specifically to the question of "cost effectiveness" to business mailers has been undertaken. Instead the Postal Service proposes to make the use of the expanded ZIP Code voluntary, so that mailers can weigh for themselves whether it will be cost effective to use it. The Postal Service conducted studies and determined that there would be gradually increasing savings each year up to 1987, the first year of full implementation. In 1987, based upon deployment of all equipment, we estimate savings of $597 million. Savings of this magnitude, which far exceed any conceivable address file correction cost, will be passed on to the mailers in the postage rates.

7. *How will service compare between mail which is now presorted by the mailer and that which must be bar coded before further processing by the Postal Service?* Mail presorted and pouched to carrier routes may experience a somewhat higher, more consistent level of achievement of service objectives, as is the case with the existing distribution system, since it will bypass incoming and secondary distributions and will be ready for earlier transportation. With this qualification, however, mail that must be bar coded before further processing by the Postal Service will be accorded the same processing and delivery priority as mail presorted by the mailer. The mode of transportation and the operating plan requirements will be identical for both types of mail. There is no difference in service objectives and there should be no other difference in service.

8. *In what offices will OCR's be located?* Present plans provide for OCR's to be located in 211 offices. These offices process 90 percent of originating and 85 percent of destinating letter-size

First-Class Mail, much of which is OCR-readable.

9. *How does the expanded ZIP Code program affect non-letter mail or other mail now processed manually?* The expanded ZIP Code will have no immediate effect on manually processed mail. However, when there is a sufficient volume of non-letter-size mail bearing the expanded ZIP Code, it would be possible to adapt manual cases for sorting to carriers based on the expanded ZIP Code, instead of the memory of sorting clerks. Use of the expanded ZIP Code would also permit the Postal Service to adapt new technology, such as wand readers, to the sorting of flats and parcels.

10. *What changes will there be in the degree of sorting for business reply mail bearing the expanded ZIP Code, for mailers with unique five-digit codes, or for other mailers?* Mailers will receive the same degree of sorting for business reply mail that bears the expanded ZIP Code as they presently receive without that Code. The Postal Service will affix a bar code on each letter bearing an expanded ZIP Code and will, through use of a BCR, be able to reach that degree of sorting with fewer handlings and accordingly at less cost. Of course, some major mailers affix a bar code themselves on their business reply and "courtesy reply" envelopes. When put in the mailstream such letters will be sorted both at the origin post office and at the destination by a BCR. As to firms with unique five-digit codes or other large volume firms, they may request a series of unique add-on numbers for their internal mail sorting purposes rather than for Postal Service use.

11. *How will mailers use the expanded ZIP Code directory data base for addresses such as rural routes which lack a street name and number?* All rural boxes which lack a street name or number are identified by box numbers. See Domestic Mail Manual, 156.52. Accordingly, in rural areas the expanded ZIP Code will be assigned by ranges of rural box numbers. Mailers can determine the expanded ZIP Code by noting the code assigned to the span of box numbers that includes the box in question.

12. *What is the relationship and its rationale between the expanded ZIP Code system and the Bureau of Census coding systems?* The Postal Service did not assign ZIP Code numbers, either the five-digit or the expanded numbers, with any reference to Bureau of Census numbers. The expanded ZIP Code, like the existing five-digit ZIP Code, divides the entire country into geographic areas for the purpose of efficient processing and delivery of mail. The Bureau of the Census used the five-digit ZIP Code in its 1980 population census mailing with very good results. It seems likely that the 1990 census will also conducted primarily through the mail, with the help at that time of the expanded ZIP Code.

13. *How much does the Postal Service estimate the change to an expanded ZIP Code will cost the Service?* The Postal Service estimates the cost of implementing the expanded ZIP Code system at $24 million. This amount includes funds to notify customers of their new ZIP Code, to plan and establish specifications for a telephone inquiry system that would provide answers to questions about another person's ZIP Code, to pay for advertising, plus salaries, travel, etc. of employees assigned to the expanded ZIP Code coding program. This amount does not include the cost of establishing a telephone inquiry system (since the Postal Service has not yet received any bids) or the cost to the Postal Service of any incentives that the Service may offer to encourage use of the expanded ZIP Code. These costs will not be on the same order of magnitude as the estimated savings once the program is implemented.

For associated equipment, the Postal Service is considering a maximum investment through 1987, at which time equipment purchases will be complete, of $887 million.

14. *Has the Postal Service estimated the cost to the public, including small businesses, of switching to the expanded ZIP Code?* There has been no formal estimate by the Postal Service of cost to the public. the cost could vary greatly from mailer to mailer, depending upon the size of the mailer's files and the ease with which they can be matched to the data base. We believe that appropriate incentives will make it worthwhile for mailers to convert their mailing lists. The Postal Service will have 10,000 expanded ZIP Code computer tapes, which will be available on a first come, first served basis, to mailers who have the capability for computerized list conversion. We estimate the cost to match a computerized address will range from one-half cent to one cent per address. Since there are some 80 million delivery addresses, and each delivery address is estimated to be on 100 different mailing lists, we estimate the total cost to convert the computer files of all mailers with computerized onversion capability would range from $40 million to $80 million. With regard to local lists (churches, etc.) and lists of non-computerized business mailers, the Postal Service expects to offer some form of list conversion assistance. However, the nature of that assistance has not yet been determined.

15. *What is the Postal Service estimate of the total savings to be anticipated from the expanded ZIP Code system?* The Postal Service estimates that the first year of full implementation of the expanded ZIP Code system will produce a savings of $597 million in mail processing workyears. In addition to these savings, there will be a reduction in initial scheme training costs for incoming secondary sortations, a reduction in recurring costs associated with scheme changes (caused by carrier route adjustments), an increase in the amount of "direct" mail broken out for carriers, a reduction in costs and improved weighing accuracy of mail in the Management Operating Data System as a result of machine data recording functions, and a potentially improved service consistency through a reduction in the sorting error rate. Although the Postal Service has not estimated the amounts that these additional reductions would save, we think the savings would be significant.

The Proposal

The Postal Service appreciates the response of commenters to our June 3 notice in the Federal Register. We found the comments to be generally thoughtful and helpful in preparing a proposed description of the ZIP Code system in section 122.6 of the Domestic Mail Manual. Section 122.6 is proposed to be amended as follows:

Sectional Analysis

Section 122.61 describes the ZIP Code system. The current regulations describe the purpose of each of the digits of the five-digit ZIP Code. Proposed 122.61 revises this section to describe the purpose of the four additional digits used in the expanded ZIP Code. It should be understood from this section that the term "ZIP Code" only refers to the expanded ZIP Code rather than any portion of the expanded ZIP Code.

Proposed 122.62 expands the current section to make it clear that the ZIP Code system enables the Postal Service to achieve greater economy, as well as accuracy and speed, in the dispatch and delivery of mail.

Proposed 122.631 is a new section dealing with the assignment of codes for the expanded ZIP Code. the proposed section makes it clear that unique expanded ZIP Codes will be assigned to appropriately-sized areas served by the Postal Service and that sufficient ZIP Codes have been reserved to allow assignment of expanded ZIP Codes to future areas of growth.

Proposed 122.632 deals with the assignment of the first five digits of the ZIP Code and is based, in part, on current 122.631, 122.632, and 122.633. The section is designed to make clear that the first five digits of the ZIP Code will not be called "the ZIP Code"; under the proposed regulation the first five digits are called "five digit ZIP Codes". The delivery area served by a postal facility assigned a five-digit ZIP Code is called a "five-digit ZIP Code area". The proposed rule continues the substance of current 122.631 that each post office is assigned at least one five-digit ZIP Code and continues the substance of 122.632 and 122.633 dealing with the assignment of more than one five-digit ZIP Code to certain post offices. These offices are called, under the new terminology proposed under 122.632, "multi five-digit ZIP Code offices".

Proposed 122.633 introduces the term "three-digit ZIP Code" to refer to the first three digits of the ZIP Code. The section also continues the substance of current 122.634 that major city post offices, like sectional center facilities, may be assigned a three digit ZIP Code. These major post offices are called, under the new terminology proposed under 122.633, "unique three-digit ZIP Code offices".

In conjunction with these last two changes, it is proposed that current Exhibit 122.633 be renumbered as Exhibit 122.632 and labeled "Multi-Five-Digit ZIP Code Offices" and Exhibit 122.634 be renumbered as Exhibit 122.633 and labeled "Unique Three-Digit ZIP Code Offices".

Proposed 122.634 deals with directory assistance to mailers. It states that systems will be provided by the Postal Service, effective October 1981, which will provide members of the public with the appropriate ZIP Code for an address. The proposed section also notes that Publication 65, the *National ZIP Code and Post Office Directory*, will provide the five-digit ZIP Code assigned to each five-digit ZIP Code area.

Proposed 122.64 continues the substance of current 122.64 without change, other than changing addresses and the ZIP Codes in the sample addresses to nine digits.

Proposed 122.65 continues, without change, current 122.65.

If the proposed regulation is adopted, it would be necessary to make a number of conforming changes in those sections of the DMM which deal with customer use of an appropriate ZIP Code. Those sections, referenced below, would be changed to make them consistent with an expanded ZIP Code system.

DMM Sections

122.821 Change "the ZIP Code" to "either the ZIP Code or the five-digit ZIP Code".
122.822 Change "the ZIP Code" to "either the ZIP Code or the five-digit ZIP Code".
122.823 Change "the ZIP Code" to "either the ZIP Code or the five-digit ZIP Code".
137.28 Change "the ZIP Code number" to "either the ZIP Code or the five-digit ZIP Code".
141.242 Change "ZIP Code" to "either the ZIP Code or the five-digit ZIP Code".
143.421(a) Change "ZIP Code" to "either the ZIP Code or the five-digit ZIP Code".
322.32(b) Change "ZIP Codes" to "either the ZIP Codes or the five-digit ZIP Codes".
362.1 Change "the ZIP Code" to "either the ZIP Code or the five-digit ZIP Code". Delete parentheses around "or carrier route code if presorted directly to carriers".
461.1(f) Change "ZIP Code" to "either the ZIP Code or the five-digit ZIP Code".
462.31 Change the initial "the ZIP Code" to "either the ZIP Code or the five-digit ZIP Code". Amend the phrase following *"Exception:"* to read: "addresses on pieces bearing a simplified address in accordance with 122.41 do not need to include a ZIP Code".
467.223 Change "Lowest ZIP Code" to "Lowest five-digit ZIP Code".
493 Change "ZIP Code" to "either the ZIP Code or the five-digit ZIP Code".
561.1(f) Change "ZIP Code" to "either the ZIP Code or the five-digit ZIP Code".
562.31 Change the initial "the ZIP Code" to "either the ZIP Code or the five-digit ZIP Code". Amend the phrase following *"Exception:"* to read: "addresses on pieces bearing a simplified address in accordance with 122.41 do not need to include a ZIP Code".
567.223 Change "Lowest ZIP Code" to "Lowest five-digit ZIP Code".
593 Change "ZIP Code" to "either the ZIP Code or the five-digit ZIP Code".
661.2 Change the initial "the ZIP Code" to "either the ZIP Code or the five-digit ZIP Code". Amend the phrase following *"Exception:"* to read: "addresses on pieces bearing a simplified address in accordance with 122.41 do not need to include a ZIP Code".
661.331 Change "the ZIP Codes" to "either the ZIP Codes or the five-digit ZIP Codes".
667.132(b) Change "Lowest ZIP Code" to "Lowest five-digit ZIP Code".
761.11 Change "a complete ZIP Code" to "either the ZIP Code or the five-digit ZIP Code".
767.22 Change "Lowest ZIP Code" to "Lowest five-digit ZIP Code".
767.6(a) Change "ZIP Code of the" to "ZIP Code or the five-digit ZIP Code of both the".
917.52(a)(5) Change the initial "the ZIP Code" to "either the ZIP Code or the five-digit ZIP Code". Amend the phrase following *"Exception:"* to read: "addresses on pieces bearing a simplified address in accordance with 122.41 do not need to include a ZIP Code".

Although exempt from the notice and comment requirements of the Administrative Procedure Act (5 U.S.C. 553 (b), (c)) regarding proposed rulemaking by 39 U.S.C. 410(a), the Postal Service invites public comment on the following proposed revisions of the Domestic Mail Manual, which is incorporated by reference in the Code of Federal Regulations. See 39 CFR 111.1.

Part 122—Addresses

Revise 122.6 to read as follows:

122.6 ZIP Code System

.61 *Description.* The ZIP Code system is a numbered coding system which facilitates efficient processing of mail. Each ZIP Code is a nine-digit number divided by a hyphen between the fifth and sixth digits. The first three digits identify the delivery area of the sectional center facility or major city post office serving the area in which the address is located. The next two digits (the fourth and fifth digits of the ZIP Code) identify the delivery area of the associate post office or branch or station of the major city post office serving the addressee. The sixth and seventh digits (the first two digits following the hyphen) identify an area known as a sector. The eighth and ninth digits identify a smaller area known as a segment.

The final four digits of the ZIP Code identify specific geographic units such as a side of a street between intersections, both sides of a street between intersections, individual buildings, a floor or group of floors in a large building, a firm within a building, a span of boxes on a rural route, or a group of post office boxes in which mail delivery will be made by a single postal employee.

.62 *Purpose.* The ZIP Code enables the Postal Service to achieve greater accuracy, speed, and economy in the processing and delivery of mail.

.63 *Assignment of ZIP Codes.*

.631 *General.* Each segment-sized geographical area served by the Postal Service is assigned a unique ZIP Code representing the sectional center facility or major city post office in whose delivery area the segment is located (three-digit ZIP Code area), the associate post office or branch or station of the major city post office serving the area (five-digit ZIP Code area), and the sector and segment number assigned to the area. Sufficient sector and segment numbers have been reserved in each five-digit ZIP Code area to allow for future growth.

.632 *Assignment of ZIP Codes to Five-Digit ZIP Code Areas.* Each delivery area is assigned a unique five-digit ZIP Code which consists of the first five digits of the ZIP Code of each address within the area. All post offices

are assigned at least one such unique five-digit ZIP Code. Larger post offices are assigned two or more five-digit ZIP Codes if two or more handlings are required for the distribution of mail to delivery routes and box sections. These post offices are called multi five-digit ZIP Code offices and are listed in Exhibit 122.633. Separate five-digit ZIP Codes are assigned to each delivery unit at these offices. Bulk mailings of second- and third-class mail, controlled circulation, presorted special fourth-class, and presorted First-Class Mail must be presorted by the mailer to specified ZIP Code and other destinations as prescribed in Chapters 3, 4, 5, 6, and 7.

.633. *Assignment of ZIP Codes to Three-Digit ZIP Code Area.* The first three digits of the ZIP Code identify the sectional center facility serving the delivery area in which the address is located. Major city post offices are also assigned three-digit ZIP Codes which are unique to those post offices. These offices are called unique three-digit ZIP Code offices and are listed in Exhibit 122.634.

.634 *Directory Assistance.* Directory assistance systems will be provided by the Postal Service effective October 1981 in order to aid members of the public in obtaining the appropriate ZIP Code for an address. Additionally, Publication 65, the *National ZIP Code and Post Office Directory*, lists the five-digit ZIP Codes assigned to each five-digit ZIP Code area.

.64 *Placement of ZIP Code Digits*

.641 The ZIP Code should appear on the last line of both the address of destination and return address following the city and state. A space not less than two-tenths of an inch nor more than six-tenths of an inch should be left between the last letter of the state name and the first digit of the ZIP Code. A comma should not be inserted between the state name and the ZIP Code. Example:

Mr. Henry Brown
3484 Wyandotte Street
Baton Rouge, LA 70805–5868

When the state name is abbreviated, the use of a period after the name is optional so long as a space precedes the ZIP Code.

.642 For mail on which space or other factors make the positioning shown in 122.641 impractical, the ZIP Code may be carried as the bottom line of the address, provided it is immediately beneath the city and state and no characters or digits either precede or follow it. Example:

Mr. Harold Jones
4740 Jean Street
Baton Rouge, LA
70805–6945

.65 *Post Office Assistance to Mailers.* Mailers may ask their local postmasters for information about the ZIP Code system and for guidance in bringing their mailing practices into compliance with the ZIP Code provisions. Postmasters will, upon request by mailers, send post office representatives to help mailers make arrangements for ZIP Code mailing lists and for packaging and sacking bulk mailings by ZIP Code.

An appropriate amendment to 39 CFR 111.3 to reflect these changes will be published if the proposal is adopted.

(39 U.S.C. 401, 403)

W. Allen Sanders,

Associate General Counsel, General Law and Administration.

Appendix—Draft Regulatory Analysis

Date: November 24, 1980
Agency: Postal Service
Contact: Warren P. Denise
Phone: (202) 245–4058

1. *Title*—Nine-Digit ZIP Code Program

2. *Nature of Proposed Action:* The Postal Service proposes to amend the regulations on the ZIP Code system (Domestic Mail Manual, 122.6). The current regulations provide that:

The ZIP Code is a five-digit coding system which identifies each post office and each delivery unit at large offices and associates each with the sectional center or major office through which mail is routed for delivery. The first three digits identify the sectional center or the major city. The last two digits identify the post office or other delivery unit.

The proposed regulation addresses the following specific issue and subissues:

Issues: The five-digit coding system would be expanded to a nine-digit system.

Subissues: (a) The term "Single-ZIP-Coded Offices" would no longer be applicable; (b) The National ZIP Code and Post Office Directory would be eventually replaced by local expanded ZIP Code directories and supplemented by a national toll-free call-in system for expanded ZIP Code information; (c) The expanded ZIP Code system would, like the existing five-digit ZIP Code system, be voluntary; (d) the notification to mailers of their expanded ZIP Codes would begin by furnishing computer tapes to large mailers in February 1981. Mass mailings to notify the occupant of each address of its new expanded ZIP Code would begin in the fall of 1981; (e) Incentives would be offered to encourage large-scale mailers to use the expanded ZIP Code; (f) The carrier route presort and other discount programs would coexist with the expanded ZIP Code system; (g) Optical Character Reading (OCR) machinery and Bar Code Readers (BCR's) would begin to be deployed in the summer of 1981. Full deployment of machinery would be completed by the end of 1986.

3. *Purpose and Need for Action:* This action will serve several purposes. The general purpose is to continue efforts by the Postal Service to improve productivity and utilize advances in technology for postal operations. More specifically, the expanded ZIP Code would assist in the automation of much of the current letter mail processing operation, make manpower savings possible, improve service consistency, and help to stabilize postal rates.

The need for this proposal is based in the law. In the Postal Reorganization Act of 1970, Congress required the Postal Service "to maintain an efficient system of collection, sorting, and delivery of the mail nationwide", 39 U.S.C. 403(b)(1). In the past ten years, the Postal Service has met that requirement in part by steadily increasing the amount of mail it handles mechanically. In 1970 the Service handled mechanically only 20 pieces of mail out of every 100 pieces at the larger offices. Today it handles more than 70 out of every 100 pieces at the 515 largest offices by machines. As a result of this mechanization and other cost-saving efforts, mailers have been saved literally billions of dollars in postage.

Current letter mail sorting machinery has contributed greatly to the productivity gains achieved by the Postal Service over the past ten years. Since fiscal years 1971, productivity measured by the number of pieces processed per work year has increased in the aggregate 27 percent. The Postal Service is now processing about 18 billion more pieces of mail per year with about 75,000 fewer employees.

Although existing letter mail sorting machines helped the Postal Service to make these great strides in efficient processing of the mail, they appear to have reached their zenith and offer very little additional hope for improvement in productivity.

Recognizing the limitations of existing machinery, the Postal Service has been working for a number of years to improve its mail processing machines in order to continue productivity growth. This activity centered around optical character readers (OCR's), which have the capacity to read addresses and, by applying a bar code, direct mail to the mail carrier without address reading by employees. At the post office of the addressee, an inexpensive bar code

reader (BCR) would sort the bar coded mail directly to carrier routes, buildings, and firms, thereby conpletely avoiding expensive manual sorting.

In April 1976 the Postal Service established a special task force to review these possibilities and make firm recommendations for ways to improve productivity. The outcome of that review was an endorsement of the concept of deploying optical character and bar code reading equipment and a recommendation that the Zip Code be extended by four additional digits.

4. *Public notice of the action.* In September 1978 the Postmaster General publicly announced the intention of the Postal Service to proceed with an expanded ZIP Code. This was further reflected in the Annual Report of the Postmaster General for fiscal year 1978 and 1979, which is transmitted to the President and the Congress pursuant to 39 U.S.C. 2402. It was also published in the annual Comprehensive Statement on Postal Operations submitted to Congress in January 1979 and in January 1980 in accordance with 39 U.S.C. 2401(g).

On June 3, 1980, the Postal Service published in the Federal Register (45 FR 37571) a description of its plan for the implementation of an expanded ZIP Code system. Twenty commenters replied to the notice, with supporters and opponents about equally divided. The commenters also asked many questions on various aspects of the plan. The response of the Postal Service to each of the questions appears in the Supplementary Information of the proposed rulemaking published today, to which this document is appended.

On September 17, 1980, a hearing on the plan for a nine-digit ZIP Code was held by the House Subcommittee on Government Information and Individual Rights. In response to a request by a member of the Subcommittee, the witness for the Postal Service agreed to prepare and submit to the Subcommittee a regulatory analysis.

5. *Selection of Proposed Option-Objectives.* The proposed expansion from a five-digit to a nine-digit ZIP Code, using OCR's and BCR's for mail sorting, is designed to improve productivity by taking advantage of advances in technology for postal operations. Other options to accomplish these objectives were also considered but rejected. The option that best carries out the objectives of the Service is reflected in Option B, which is, therefore, proposed. A summary analysis of the various possibilities follows.

6. *Options.* A description of each of the six options is presented below. An assessment of the effects of each option is also presented.

Option A: Continuation of the present system.

(a) *Description.* The present mail processing system employs multi-position letter sorting machines (MPLSM's) and manual distribution cases. Chart I, a simplified flow of the present processing system, depicts how mail flows through this equipment.

First, originating mail which is subject to machine processing ("machinable") is normally distributed on an MPLSM. Operators must key a combination of digits of the present ZIP Code. Based on the data entered, the MPLSM will then direct mail to the proper separation on the reverse side of the machine. Distribution will be made to other post offices or to a zone or associate office of the origin city. Mail which will be delivered in another city requires additional distribution at the city of delivery and may require intermediate sorting at an Area Distribution Center (ADC). Finally, the mail will be distributed to the carrier, box, or firm by an MPLSM operator or manual clerk.

From the above brief description of the present mail flow, it is apparent that distributing mail with the present MPLSM's requires numerous handlings. In addition, this sorting concept requires operators to memorize secondary schemes in order to distribute mail to the final delivery operation. These secondary operations have a lower productivity than normal MPLSM operations with a tendency for higher error rates. The productivity is even lower if processing is accomplished by manual distribution.

Presently, over seventy percent of the originating first-class letter volume is distributed through MPLSM's in mechanized offices. Approximately forty percent of the volume distributed to carriers is processed by MPLSM. Except for a few isolated instances, the potential for productivity gains through deployment of additional MPLSM's is limited.

(b) *Economic Effects:*—(1) *Individuals:* Ninety-seven percent of the mail now being received by the Postal Service bears a ZIP Code. The five-digit ZIP Code is widely accepted by individuals. Its use does not add a significant cost for individuals using the mail.

BILLING CODE 7710-12-M

CHART I

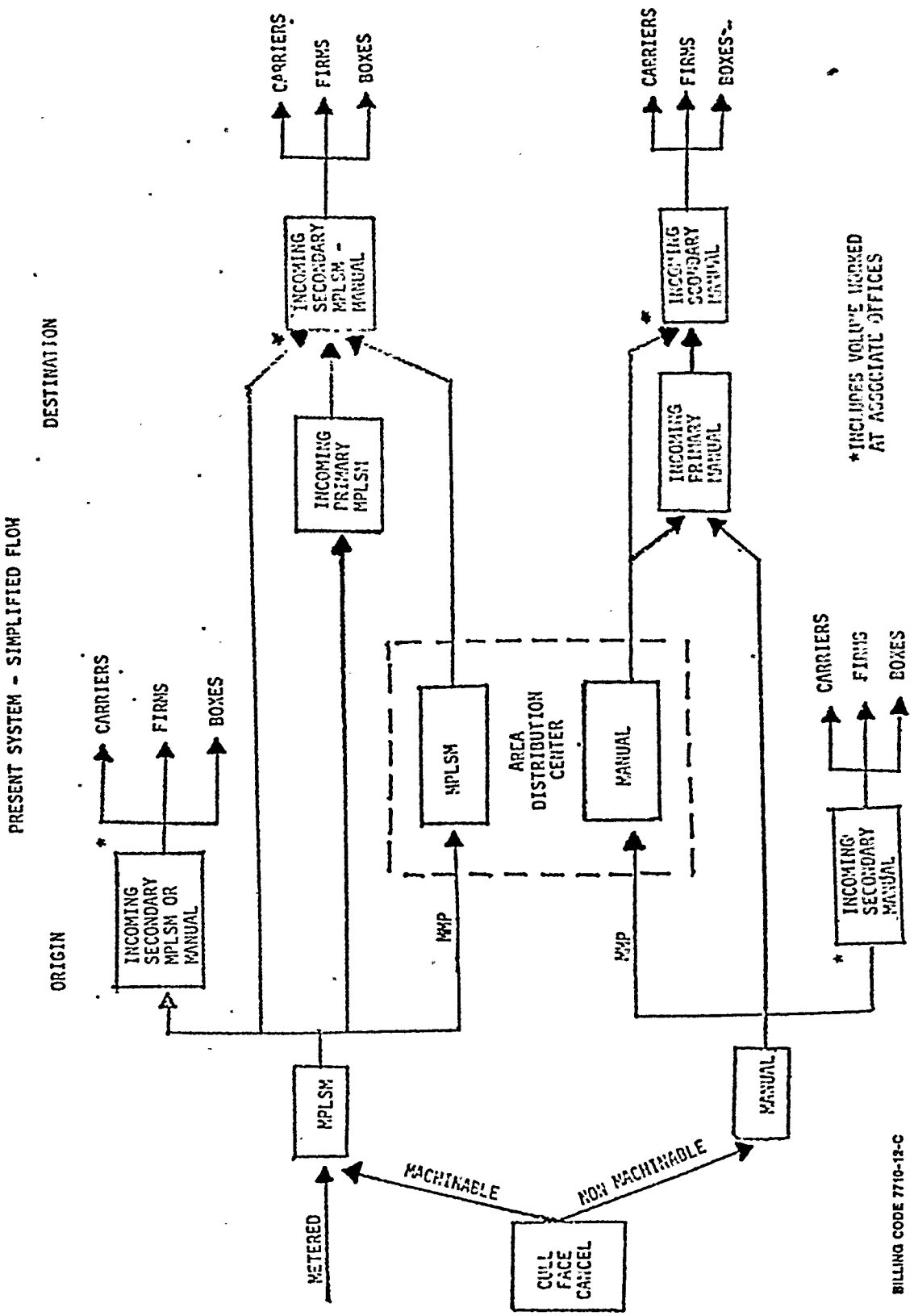
PRESENT SYSTEM - SIMPLIFIED FLOW
ORIGIN
DESTINATION
CARRIERS
FIRMS
BOXES
INCOMING SECONDARY MPLSM OR MANUAL
MPLSM
MANUAL
METERED
MACHINABLE
NON MACHINABLE
CULL FACE CANCEL
MMP
AREA DISTRIBUTION CENTER
INCOMING PRIMARY MPLSM
INCOMING SECONDARY MPLSM - MANUAL
INCOMING PRIMARY MANUAL
INCOMING SECONDARY MANUAL
*INCLUDES VOLUME WORKED AT ASSOCIATE OFFICES
BILLING CODE 7710-12-C

(2) *Small companies and organizations.* Some small companies, such as utilities, find it advantageous to presort their First-Class Mail. Depending upon certain factors such as the number of pieces, weight, etc., such mail must be sorted either to the five-digit ZIP Code or the 3-digit ZIP Code prefix in order to receive the reduced presort rate. Many small nonprofit organizations, such as churches, send out third-class mail at reduced bulk rates which are based on presortation of the mail. The economic effect of the existing ZIP Code system on such mailers is beneficial.

(3) *Major mailers.* Major mailers are able to take advantage of all presort discount program, all of which involve use of the existing five-digit ZIP Code. The economic effect of the existing ZIP Code system on major mailers is beneficial.

(4) *The postal system.* Since FY 1971, productivity measured by the number of pieces processed per work year has increased in the aggregate 27 percent. MPLSM's, which are used to sort mail by the existing ZIP Code, have helped the Postal Service to process 18 billion more pieces of mail per year with some 75 thousand fewer employees. Without productivity advances, the public would today be paying several billion dollars more per year for postage.

The following productivity rates are being achieved in the present system:

Operation	Productivity pieces per workhour
Outgoing and managed mail (MPLSM)	1,600–1,850
Incoming secondary (MPLSM)	1,300–1,450
Incoming secondary (Manual)	700–1,000

The distribution costs per thousand pieces under the present system are $25.

Under the present system no additional capital investment will be made. The operating costs necessary to support it include direct maintenance labor, recurring maintenance training, and equipment parts. These are outlined in Chart II.

BILLING CODE 7710-12-M

CHART II

PRESENT SYSTEM - BASELINE

X ($000)

	YEAR 0 1981	1 1982	2 1983	3 1984	4 1985	5 1986	6 1987	7 1988	8 1989	9 1990	10 1991	11 1992	12 1993	13 1994	14 1995	15 1996		TOTAL
MAINTENANCE LABOR	(52,250)	(55,909)	(59,966)	(64,412)	(69,192)	(74,329)	(79,841)	(85,764)	(92,129)	(98,964)	(106,306)	(114,195)	(122,669)	(131,771)	(141,548)	(152,050)		(1,501,295
MAINTENANCE TRAINING	(4,017)	(4,131)	(4,116)	(4,421)	(4,749)	(5,103)	(5,479)	(5,887)	(6,325)	(6,794)	(7,297)	(7,839)	(8,421)	(9,044)	(9,716)	(10,437)		(103,776)
MAINTENANCE PARTS	(2,790)	(3,320)	(3,619)	(3,981)	(4,379)	(4,617)	(5,259)	(5,828)	(6,411)	(7,052)	(7,758)	(8,533)	(9,387)	(10,325)	(11,358)	(12,494)		(107,111)
TOTAL COST	(59,057)	(63,360)	(67,701)	(72,814)	(78,320)	(84,049)	(90,579)	(97,479)	(104,865)	(112,810)	(121,361)	(130,567)	(140,477)	(151,140)	(162,622)	(174,981)		(1,712,182)

( ) = CASH OUTFLOW

NOTE: The above maintenance costs represent the cost of supporting the present equipment at the 211 sites which would receive OCR's

BILLING CODE 7710-12-C

(c) *Distribution of Effects.* No additional savings will be achieved and the outlook for further improvement in the productivity of the mail processing system will be bleak. As inflation and other factors continue to drive up labor costs, the partial offset against the need for rate increases which increasing mechanization has provided in the past will disappear.

Option B: The Postal Service's proposed plan.

(a) *Description.* Based on the recommendations contained in the 1976 Task Force Report, a unique four-digit add-on code will be assigned to each block face which receives city delivery services. Unique codes will be assigned to business firms, portions of rural routes, and lock box sections. These four numbers when combined with the existing five-digit ZIP Code will produce an expanded ZIP Code which can be used for sorting mail to the required delivery level. With the proposed system, changes in the secondary schemes caused by route restructuring will require only a reprogramming of the sorting equipment. Under the present system, route changes require a relearning process by MPLSM and manual distribution clerks. This is a time consuming and expensive requirement, and is subject to errors especially during the initial stages.

A simplified flow for the proposed mail processing operation is provided in Chart III. It should be noted that in both the present and proposed systems, the non-machinable mail will continue to be processed by manual distribution clerks. With the proposed system, trayed and bundled meter mail, business reply mail, and loose meter mail from the cancelling operation will be processed through the OCR Channel Sorter.

BILLING CODE 7710-12-M

CHART III

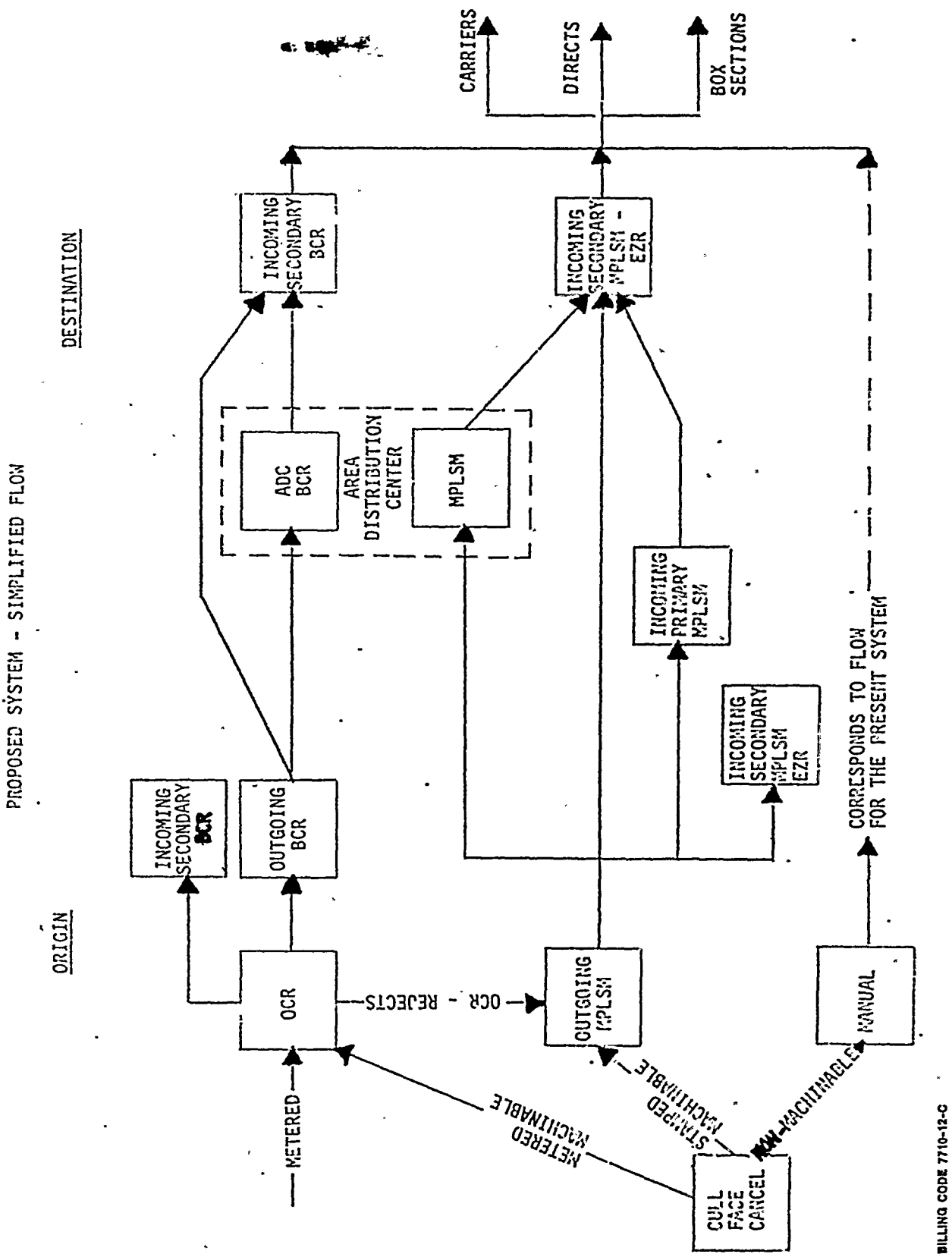

BILLING CODE 7710-12-C

The OCR will read the expanded ZIP Code, print a bar code on the letter, verify that the bar code is the right one for the number read, and sort this mail into a limited number of channels or stackers. If the OCR is unable to bar code the letter, then the letter will be sent to the MPLSM operation. There it will follow the traditional machine processing path. Mail to which a bar code has been applied will be taken from the channels and processed through the bar code reader (BCR), which will read the bar code and sort to the correct destination. If a bar coded letter is to be delivered by another post office, then the outgoing routing scheme will be used. On the other hand, if mail is to be delivered from the originating post office, then it will be sorted to a carrier, firm, or box using a BCR incoming-secondary scheme.

If intermediate distribution is required at an Area Distribution Center (ADC), then mail will be dispatched from the origin office, sorted by a BCR at the ADC, and dispatched to the office of delivery for BCR sorting to a carrier, firm, or box. Mail may also be dispatched directly from the origin office to the office of delivery without ADC processing. In either case, mail will ordinarily be sorted by a BCR instead of a comparatively higher-cost MPLSM or manual operation.

Mail that has not been bar coded will be processed on the MPLSM. These machines will be modified with an Expanded ZIP Code Retrofit (EZR) kit to enable the operators to key the added four digits in place of using memorized routing schemes to do the secondary sort. The machine computer will direct the mail piece to the bin for the appropriate carrier route, firm, or box.

(b) *Economic Effects:*—(1) *Individuals.* The Postal Service recognizes that people tend to resist the addition of new numbers to their lives. Numbers are impersonal and sometimes hard to remember. They tend to subordinate the human element to machines and technology. However, the expanded ZIP Code is voluntary. The nine expanded ZIP Code numbers are also no longer than Social Security numbers and are shorter than long-distance phone numbers and many credit card numbers and bank numbers. The Postal Service hopes individuals will use the expanded ZIP Code, as they now use the five-digit ZIP Code. The Postal Service sees little, if any, measurable economic impact on individuals who add four more digits to their existing five-digit ZIP Code.

(2) *Small companies and organizations.* The companies and organizations that presort according to the present five-digit ZIP Code or the three-digit ZIP Code prefix will be able to choose for themselves whether to continue their present practices without penalty, or begin using the expanded ZIP Code with such incentives as may be offered. The principal economic effect would be the cost of updating mailing lists. The Postal Service will supply computer tapes to those who have the capability for computerized file conversion, and will also assist other mailers to adapt their lists. There would, of course, be other conversion costs, such as the cost of revising envelopes to provide sufficient space for the extra digits, the cost of revising forms, etc. Costs such as these appear to be relatively minor and could be phased in gradually as existing stocks of envelopes and forms are used up and new supplies are ordered. The expanded ZIP Code system is constructed to accommodate change. It does not have to be adopted by mailers all at once. They can use the five-digit ZIP Code until such time as they are ready to make a partial or complete switch-over. As mailers begin to switch over to the expanded ZIP Code, the Postal Service can schedule its OCR and BCR machines to process mail in accordance with the expanded ZIP Code system as the volume of such mail warrants.

(3) *Major mailers.* Major mailers would continue to be able to take advantage of all existing presort discount programs, which depend upon use of the five-digit ZIP Code, while preparing their mailing lists to accommodate the expanded ZIP Code. As postage rates reflect the benefits of the code and increased automation, there will be a financial advantage for large mailers to use the new system.

The cost of conversion of mailing lists, which could have been large, will be much reduced because the Postal Service is preparing 10,000 nine-digit computer tapes which it will share with mailers on a first come, first served basis.

We estimate the cost to match a computerized address will range from one-half cent to one cent per address, based on estimates from large list-processing companies. There are 80 million delivery addresses in the United States. On the average, a delivery address is on an estimated 100 different mailing lists. Based on these assumptions, the total investment needed to convert the computer files of all the large mailers would range from $40 million to $80 million. This amount would not necessarily be expended in one year, since all large business mailers would not convert immediately. We think it more likely that half of these mailers would convert their files during the first year after implementation of the proposed system. The remaining mailers would do so over a three or four year period.

It should also be noted that the savings that will accrue to the postal system from the expanded ZIP Code will slow postage rate increases for mailers, and will further offset the costs to mailers of the changeover to the expanded ZIP Code.

(4) The postal system: The economic benefits to the public through cost savings within the postal system in the first year of full implementation are estimated to be $597 million. The increases in productivity that would make these savings possible are reflected in the following table:

Operation	Productivity pieces per workhour
Optical Character Reader	10,000
Bar Code Reader	4,000
Incoming Secondary—EZR	1,300-1,450

When the estimated processing rates are reached, the distribution costs per thousand pieces change from $25 under the present system to only $17 under the proposed automated system.

In addition to the savings that have been identified, there are other savings that will accrue. Expected benefits of the expanded ZIP Code and automated system include a reduction in initial scheme training costs (memorization of addresses on carrier routes) for incoming secondary sortations; a reduction in recurring costs associated with scheme changes (caused by carrier route adjustments); an increase in the amount of "direct" mail broken out for carriers; an improvement in service consistency, through an overall reduction in system error rate; and a reduction in costs and improved accuracy associated with weighing mail for the Management Operating Data System (MODS) by use of machine data recording functions.

Under the proposed system the Postal Service estimates the cost of implementing part of the expanded ZIP Code will be $24 million. This amount includes funds to notify customers of their new ZIP Code, to plan and establish specifications for a telephone inquiry system that would provide answers to questions about another person's ZIP Code, to pay for advertising, plus salaries, travel, etc. of employees assigned to the expanded ZIP

Code program. This amount does not include the cost of establishing a telephone inquiry system (since the Postal Service has not yet received any bids) or the cost to the Postal Service of any incentives that the Service may offer to encourage use of the expanded ZIP Code. These costs will not be on the same order of magnitude as the estimated savings once the program is implemented.

For associated equipment, the Postal Service estimates the maximum to tal capital and related costs through 1987, at which time equipment purchases will be complete, at $887 million.

(c) *Distribution of Effects.* Mailers should benefit from the postage savings which improved productivity will make possible. Initial investment costs to update mailing lists will be mitigated by help provided by the Postal Service. No one will be required to make the investment for updating mailing lists, so each mailer can evaluate the cost and potential return for itself. The expected savings from just one year of full operation of the automated processing system, which will be passed on through postage rates, far exceed the most liberal estimate of the total cost for adapting the nation's mailing lists to the expanded ZIP Code.

Option C: Mandatory use of the expanded ZIP Code.

(a) *Description:* This would be the same as in Option B, except that use of the expanded code in addresses would be a requirement.

(b) *Economic Effects*—(1) *Individuals.* This would be the same as in Option B, assuming that individuals will participate voluntarily.

(2) *Small companies and organizations.* Requiring all small companies and organizations to use the expanded ZIP Code might affect many of these mailers adversely unless a fairly long period preceded the implementation date. The Postal Service believes it will be fairer to permit such mailers to continue to use the five-digit ZIP Code and presort programs while they adjust their mailing practices and procedures to accommodate the expanded ZIP Code. For some mailers the adverse economic impacts of an expanded ZIP Code may override the advantages. Although the Postal Service will be striving to avoid any such results by offering incentives, the Postal Service rejected this option in favor of Option B.

(3) *Major mailers.* There would appear to be fewer adverse economic impacts on major mailers than on small mailers; since we assume that more major mailers will find it to be in their economic interest to use the expanded ZIP Code. The principal disadvantage of making the expanded ZIP Code mandatory would flow from the length of the implementation period. So long as the deadline for implementation is not so short as to cause added expense from obsolete, unusable five-digit ZIP Code envelopes and forms, or from more expensive, expedited contracts to convert lists of names, we believe the economic effects on major mailers of a mandatory expanded ZIP Code would be little different from a voluntary expanded ZIP Code.

(4) *The postal system:* In one sense the effect would be favorable, since there would be, from the effective date of the program, an assured sufficient volume of expanded ZIP Code mail to recover maximum savings in terms of costs and postage rates. Manpower savings might be possible at an earlier time, so that the cost of the OCR's and BCR's could also be recovered through such savings at an earlier time. Nevertheless, the Postal Service rejected this option on the ground that it is unnecessary and fails to reflect the cooperative relationship required between the postal system and its customers. It represents too rigid a response to the problem of controlling the growth of processing costs. It fails to take into account the varying circumstances of mailers of all sizes, some of which might find a mandatory expanded ZIP Code to be a hardship.

(c) *Distribution of Effects.* Conditions would be the same as for Option B overall, except that hardships might be created for some mailers. Public resistence might be expected to be greater and might undermine the program.

Option D. The proposed Postal Service Plan without incentives.

(a) *Descriptions.* This would be the same as in Option B, except that the Postal Service would not offer incentives for mailers to convert mailing lists and use the expanded ZIP Code.

(b) *Economic Effects.* (1) *Individuals.* This would be the same as in Option B.

(2) Small companies and organizations: Some mailers who might like to change their mailing lists in order to promote greater productivity and assist in the common effort to hold down postage rates might find it more difficult to make the initial required investment without Postal Service help.

(3) *Major mailers.* It would seem that participation by major mailers might be depressed even more, since their conversion costs may be higher and they would have qualified more easily for incentives such as free tape distribution.

(4) *The postal system.* The difficulty of justifying the expense of incentives during a transition period, when the full cost savings expected from the fully implemented system are not yet being realized, would be avoided. The chances to obtaining the level of usage of the expanded ZIP Code necessary to achieve the full savings potential would be reduced, however.

(c) *Distribution of effects.* It would appear that the full potential of the OCR and BCR equipment might not be achieved as quickly, as some mailers would find it more difficult to adapt their mailing lists to use the expanded ZIP Code. *Option E.* Deploy OCR and BCR equipment for use with the present five-digit ZIP Code.

(a) *Description.* Those parts of the present primary mail processing operations which require operators of MPLSM's to key the first three or last two digits of the five-digit ZIP Code could be automated for a large portion of the mail through use of OCR and BCR equipment. Without the four additional digits in the ZIP Code, sorting to the carrier at the destination office would continue to be done by employees through scheme memorization.

(b) *Economic Effects*—(1) Individuals, small companies and organizations, and major mailers: No changes would be required and none would be perceived. A reduced return on investment in the equipment would produce more modest postal savings.

(2) *The postal system.* A somewhat smaller number of BCR's would be needed to process five-digit ZIP Code mail. The return on investment is estimated to be approximately 20 percent, enough to justify the purchase. This would be less than half the expected return of 48 percent associated with the expanded ZIP Code. However, in terms of savings, the Postal Service would have to forego approximately $380 million in 1987. Also, potential future savings in training and carrier operations would be greatly reduced.

(c) *Distribution of Effects.* It would be wasteful to stop short of obtaining maximum efficiency and maximum benefit from the OCR and BCR equipment deployed, as would be the case under Option E. While use of the expanded ZIP Code under Option B requires mailers to contribute an investment of their own in order to update their address files, the Postal Service will participate in that effort directly and through incentives. The joint investment will quickly pay for itself as the automated processing system comes into full use.

Option F: Mailers Encouraged to Print Bar Codes on Outgoing Mail.

(a) *Description.* At present some major mailers affix a bar code to their pre-addressed return envelopes. The Postal Service has BCR's capable of reading this bar code and sorting it right to the firm.

The bar codes that are supplied to mailers are based on the five-digit ZIP Code. This system is in operation in 33 cities and processes 600 million pieces of mail annually.

It would be possible for some large mailers to modify their computerized addressing operations to apply bar codes themselves to outgoing mail based on the expanded ZIP Code. Appropriate incentives could be offered to encourage these bar coded mailings. Mail bar-coded by mailers in accordance with the expanded ZIP Code would be processed in the same way as in Option B.

(b) *Economic Effects*—(1) Individuals. There would be no effect at all on individuals.

(2) Small companies and organizations: There would be little, if any, effect on these mailers, since they are unlikely to have the necessary volume to be able to afford the sophisticated equipment to put bar codes on their mail.

(3) *Major mailers.* Since many major mailers with large enough volumes to benefit from rate incentives for presorting already do so, Option F apparently would have to appeal to a category of mailings with insufficient volume for the presort program but still large enough for a computerized bar coding operation. The volume of mail being bar coded by firms would be relatively small under this option.

(4) *The postal system.* This small volume of mail containing a bar code in the address block area would not be sufficient to justify the extra effort required to process it separately. In any event, it would still require a bar code to be imprinted on the bottom of the envelope for subsequent sorts.

(c) *Distribution of Effects.* This option alone is a much more limited one than Option B and does not offer the same potential for major productivity gains. It would still require the development and introduction of the expanded ZIP Code. Once Option B is in effect and incentives to use the expanded ZIP Code have been established, this option would be available as a possible addition to the program if sufficient interest were expressed.

[FR Doc. 80-37060 Filed 11-26-80; 8:45 am]
BILLING CODE 7710-12-M

ENVIRONMENTAL PROTECTION AGENCY

40 CFR Part 52

[A-4-FRL 1683-7]

Approval and Promulgation of Implementation Plans; Tennessee, 1979 Revisions for Nonattainment Areas, Supplemental Submittals

AGENCY: Environmental Protection Agency.

ACTION: Notice of receipt.

SUMMARY: This is a notice of receipt of supplemental information required from the State of Tennessee under the terms of the conditional approval given to the Memphis carbon monoxide revisions on February 6, 1980 (45 FR 8004).

ADDRESSES: Copies of the materials submitted by Tennessee may be examined during normal business hours at the following locations:

Public Information Reference Unit, Library Systems Branch, Environmental Protection Agency, 401 M Street, S.W., Washington, D.C. 20460.

Library, Environmental Protection Agency, Region IV, 345 Courtland Street, N.E., Atlanta, Georgia 30365.

Tennessee Air Pollution Control Division, 256 Capitol Hill Building, Nashville, Tennessee 37203.

Division of Air Pollution Control, Memphis-Shelby County Health Department, 814 Jefferson Avenue, Memphis, Tennessee 38105.

FOR FURTHER INFORMATION CONTACT: Drew Peake, Environmental Protection Agency, Region IV, Air Programs Branch, 345 Courtland Street, N.E., Atlanta, Georgia 30365, 404/881-3286 or FTS 257-3286.

SUPPLEMENTARY INFORMATION: The State of Tennessee was required to submit additional information by March 15, 1980, to satisfy the conditions of approval for the Memphis carbon monoxide (CO) control plan as stipulated in the February 6, 1980, Federal Register (45 FR 8004). Tennessee has complied with this requirement, but there is a recognized deficiency in the submittal. The implementation schedule for the Memphis Vehicle Inspection and Maintenance Program (I/M) included in the submittal has some commitment dates which have already been missed. The Memphis and Shelby County Office of Planning and Development has modified the I/M schedule and forwarded it to the Technical Secretary of the Tennessee Air Pollution Control Board for formal inclusion in the Tennessee SIP. EPA has received an informal copy of the revised schedule. Consequently, EPA will delay removing the conditions on the approval until January 31, 1981, in order to allow for formal adoption and submittal of the revised CO control plan by the State of Tennessee. This delay will provide the State with sufficient time to complete its administrative procedures and any legislative review which may be necessary. Thus, the conditional approval of February 6, 1980, will remain in effect until January 31, 1981. Once this information has been received, EPA will act on granting final approval for the CO plan. However, EPA is giving notice to all concerned parties that if the January 31, 1981 date is missed, EPA will proceed to disapprove the Memphis carbon monoxide plan.

(Secs. 110 and 172 of the Clean Air Act (42 U.S.C. 7410 and 7502))

Dated: November 14, 1980.

John A. Little,

Acting Regional Administrator.

[FR Doc. 80-37163 Filed 11-26-80; 8:45 am]
BILLING CODE 6560-38-M

40 CFR Part 86

[FRL 1685-3]

Application for Waiver of Effective Date of the 1982 Model Year Carbon Monoxide Emission Standard for Light-Duty Motor Vehicles—Request for Comments

AGENCY: Environmental Protection Agency (EPA).

ACTION: Request for public comments.

SUMMARY: This notice requests public comment on new contentions EPA has received from General Motors Corporation (GM) after the Administrator had reached a decision to deny its request for a waiver of the 1982 model year carbon monoxide (CO) emission standard as it applies to GM's 1.8/2.0 liter engine family.

DATE: Submit comments through December 8, 1980.

ADDRESSES: Interested parties may submit comments on GM's new contentions to the Director, Manufacturers Operations Division (EN-340), U.S. Environmental Protection Agency, 401 M Street, SW Washington, D.C. 20460. Information submitted by GM, as well as any comments received from interested parties, will be available for public inspection and copying in EPA Public Docket EN-80-16, located in EPA's Central Docket Section (A-130), Gallery I, 401 M Street, SW, Washington, D.C. 20460.

FOR FURTHER INFORMATION CONTACT: Mr. Glenn Unterberger, Chief, Waivers Section, Manufacturers Operations Division (EN-340), 401 M Street, SW, Washington, D.C. 20460, telephone number, (202) 472-9421.

SUPPLEMENTARY INFORMATION: Section 202(b)(5) of the Clean Air Act, as amended (Act), 42 U.S.C. 7521(b), authorizes EPA to waive application of the 1981 and 1982 model year statutory CO emission standard applicable to light-duty motor vehicles and engines upon the request of a manufacturer for a specific vehicle model if the Administrator makes certain findings specified under section 202(b)(5)(C) of the Act.

On September 12, 1980, GM requested a waiver of the 1982 model year statutory CO standard for its 1.8/2.0L engine family. EPA held a public hearing to consider the waiver request on October 10, 1980.

On November 20, 1980, I signed a decision which denied GM's waiver request. Prior to release of the document enbodying that decision, however, GM presented the Agency with additional arguments to support its waiver request. GM subsequently formalized these arguments in a letter to me, dated November 21, 1980. After reviewing these arguments from GM, particularly in light of the public interest issues raised by GM, I am now inclined to alter my position and grant GM's waiver request.

GM's position is that without a waiver, its 1.8/2.0L engine family will achieve lower fuel economy levels (at least on its model year 1982 vehicles) than it could have achieved were a relaxed CO standard in effect, and will be burdened by additional costs. GM contends that its impact would be very significant on the competitive position of the engine family in question. GM plans to use the 1.8/2.0L engine in a new line of automobiles which figure as a major part of GM's marketing strategy to meet the public's need for increasingly fuel-efficient cars.

GM further points out that any obstacles to marketing this line of cars with less than optimum fuel economy and cost could present risks to this model's competitive position in the U.S. market. The record for this waiver proceeding shows that these risks, in turn, would present themselves at a very difficult time, when many manufacturers, including GM, are attempting to recover from a period in which they sustained serious financial losses, made large cash commitments to retooling production facilities, and were forced to lay off sustantial numbers of employees.

GM's problems assume added importance in light of its plans for early introduction of this 1982 model year engine family (spring of 1981). There is a risk that the relatively short lead time still available to GM limits the flexibility it has to address the problems it has identified were it not to receive a waiver.

In addition, GM already has raised concerns regarding its ability to market this model without a waiver due to potential driveability problems and inability to meet emissions design targets. GM has contended that partial or total inability to market its 1.8/2.OL engine family could result in significant adverse economic impacts to GM.

The concerns which GM identifies are of the type of considerations which the court in *International Harvester* v. *Ruckelshaus* (478 F. 2d 615 (D.C. Cir. 1973)) indicates EPA should take into account in weighing the risks of erroneously denying a waiver request. GM's recent arguments and submission have persuaded me that I should give additional attention to this risk balancing process and, indeed, to the larger issues involved in assessing the potential impacts of this waiver decision on the public interest. At a time when the automobile industry is finding significant problems in many areas, the public interest to be served by granting a waiver must be carefully balanced against the environmental benefits which denial in this instance would likely achieve.

As a result, I am requesting public comment on the concerns GM has raised for the purpose of reevaluating my original waiver decision. I recognize the need to conduct this reevaluation quickly, in light of the sixty-day statutory deadline which section 202(b)(5) of the Act establishes for responding to CO waiver requests and in light of GM's need to finalize its plans to begin production of these vehicles within a few months. Thus, I am requiring that all comments be submitted to EPA by the first working day which is 10 days after publication of this notice.

EPA will place all information which it receives by that date in public docket EN-80-16. I will rely solely on the information contained in that docket in deciding whether or not to reverse my original denial of GM's waiver request.

Dated: November 24, 1980.

Douglas M. Costle,
Administrator.

[FR Doc. 80-37132 Filed 11-26-80; 8:45 am]
BILLING CODE 6560-33-M

40 CFR Part 123

[SW-4-FRL 1683-6]

South Carolina's Application for Interim Authorization, Phase I, Hazardous Waste Management Program

AGENCY: Environmental Protection Agency, Region IV.

ACTION: Notice of public hearing and public comment period.

SUMMARY: EPA has promulgated regulations under Subtitle C of the Resource Conservation and Recovery Act (as amended) to protect human health and the environment from the improper management of hazardous waste. Phase I of the regulations were published in the Federal Register on May 19, 1980 (45 FR 33063). These regulations include provisions for authorization of State programs to operate in lieu of the Federal program. Today EPA is announcing the availability for public review of the South Carolina application for Phase I interim authorization, inviting public comment, and giving notice of a public hearing to be held on the application.

DATE: Comments on the South Carolina interim autorization application must be received by January 6, 1981.

Public hearing: EPA will conduct a public hearing on the South Carolina interim authorization application at 7:00 p.m. on Tuesday, December 30, 1980. The State of South Carolina will participate in the public hearing.

ADDRESSES: The public hearing will be held at: Rutledge Building, Conference Room, Basement Floor, 1429 Senate Street, Columbia, South Carolina 29201.

Copies of the South Carolina interim authorization application are available at the following addresses for inspection and copying by the public:

(1) South Carolina Department of Health & Environmental Control, Solid Waste Management Division, 2600 Bull Street, Columbia, South Carolina 29201; Telephone: 803/758-5681

(2) Environmental Protection Agency, Regional Office Library, Room 121, 345 Courtland Street NE., Atlanta, Georgia 30365; Telephone: 404/881-4216

(3) EPA Headquarters Library, Room 2404, 401 M Street SW., Washington, D.C. 20460.

Written comments, requests to speak at the hearing, and requests for further information should be addressed to: Donald R. Hunter, Residuals Management Branch, Environmental Protection Agency, 345 Courtland Street

NE., Atlanta, Georgia 30365; Telephone: 404/881-3936.

FOR FURTHER INFORMATION CONTACT: Donald R. Hunter, 404/881-3936.

SUPPLEMENTARY INFORMATION: In the May 19, 1980 Federal Register (45 FR 33063) the Environmental Protection Agency promulgated Phase I of its regulations, pursuant to Subtitle C of the Resource Conservation and Recovery Act of 1976 (as amended), to protect human health and the environment from the improper management of hazardous waste. EPA's Phase I regulations establish, among other things: the initial identification and listing of hazardous wastes; the standards applicable to generators and transporters of hazardous wastes, including a manifest system; and the "interim status" standards applicable to existing hazardous waste management facilities before they receive permits.

The May 19 regulations also include provisions under which EPA can authorize qualified State hazardous waste management programs to operate in lieu of the Federal program. The regulations provide for a transitional stage in which qualified State programs can be granted interim authorization. The interim authorization program is being implemented in two phases corresponding to the two stages in which the underlying Federal program will take effect. In order to qualify for interim authorization, the State hazardous waste program must, among other things:

(1) have been in existence prior to August 17, 1980, and

(2) be "substantially equivalent" to the Federal program.

A full description of the requirements and procedures for State interim authorization is included in 40 CFR Part 123 Subpart F, (45 FR 33479).

The State of South Carolina has submitted a complete application to EPA for Phase I interim authorization. Copies of the State submittal are available for public inspection and comment as noted above.

Conduct of Hearing

The hearing is intended to provide an opportunity for interested persons to present their views and submit information for consideration by EPA in the decision whether to grant South Carolina interim authorization for Phase I of the RCRA program.

The hearing will be informally structured. Individuals providing oral comments will not be sworn in, nor will formal rules of evidence apply. Questions may be posed by EPA personnel to persons providing oral comments; however, no cross-examination by other participants will be allowed.

The State will testify first and present a short overview of the State program. Other commenters will then be called in the order in which their requests were received by EPA. As time allows, persons who did not sign up in advance but who wish to comment on the State's application for Phase I interim authorization will also be given an opportunity to testify. Each organization or individual will be allowed as much time as possible for oral presentation based on the number of requests to participate and the time available for the hearing. As a general rule, in order to ensure maximum participation and allotment of adequate time for all speakers, participants should limit the length of their statements to five minutes.

Dated: November 20, 1980.

John A. Little,

Acting Regional Administrator.

[FR Doc. 80-37131 Filed 11-26-80; 8:45 am]

BILLING CODE 6560-30-M

---

40 CFR Part 123

[SW-4-FRL 1683-5]

Tennessee's Application for Interim Authorization, Phase I, Hazardous Waste Management Program

AGENCY: Environmental Protection Agency, Region IV.

ACTION: Notice of public hearing and public comment period.

SUMMARY: EPA has promulgated regulations under Subtitle C of the Resource Conservation and Recovery Act (as amended) to protect human health and the environment from the improper management of hazardous waste. Phase I of the regulations were published in the Federal Register on May 19, 1980 (45 FR 33063). These regulations include provisions for authorization of State programs to operate in lieu of the Federal program. today EPA is announcing the availability for public review of the Tennessee application for Phase I interim authorization, inviting public comment, and giving notice of a public hearing to be held on the application.

DATE: Comments on the Tennessee interim authorization application must be received by January 5, 1981.

Public hearing: EPA will conduct a public hearing on the Tennessee interim authorization application at 7:00 p.m. on Monday, December 29, 1980. the State of Tennessee will participate in the public hearing.

ADDRESSES: The public hearing will be held at: Legislative Plaza, Room 16, 6th Ave. North at Union Street, Nashville, Tennessee (parking available under building).

Copies of the Tennessee interim authorization application are available at the following addresses for inspection and copying by the public:

(1) Division of Solid Waste Management, Tennessee Department of Public Health, 320 Capitol Hill Building, Nashville, Tennessee 37219; Telephone: 615/741-3424.

(2) Environmental Protection Agency, Regional Office Library, Room 121, 345 Courtland Street NE., Atlanta, Georgia 30365; Telephone 404/881-4216.

(3) EPA Headquarters Library, Room 2404, 401 M Street SW., Washington, D.C. 20460.

Written comments, requests to speak at the hearing, and requests for further information should be addressed to: Patricia S. Zweig, Residuals Management Branch, Environmental Protection Agency, 345 Courtland Street NE., Atlanta, Georgia 30365; Telephone: 404/881-3966.

FOR FURTHER INFORMATION CONTACT: Patricia S. Zweig, 404/881-3966.

SUPPLEMENTARY INFORMATION: In the May 19, 1980 Federal Register (45 FR 33063) the Environmental Protection Agency promulgated Phase I of its regulations, pursuant to Subtitle C of the Resource Conservation and Recovery Act of 1976 (as amended), to protect human health and the environment from the improper management of hazardous waste. EPA's Phase I regulations establish, among other things: the initial identification and listing of hazardous wastes; the standards applicable to generators and transporters of hazardous wastes, including a manifest system; and the "interim status" standards applicable to existing hazardous waste management facilities before they receive permits.

The May 19 regulations also include provisions under which EPA can authorize qualified State hazardous waste management programs to operate in lieu of the Federal program. The regulations provide for a transitional stage in which qualified State programs can be granted interim authorization. The interim authorization program is being implemented in two phases corresponding to the two stages in

which the underlying Federal program will take effect. In order to qualify for interim authorization, the State hazardous program must, among other things:

(1) have been in existence prior to August 17, 1980, and

(2) be "substantially equivalent" to the Federal program.

A full description of the requirements and procedures for State interim authorization is included in 40 CFR Part 123 Subpart F (45 FR 33479).

The State of Tennessee has submitted a complete application to EPA for Phase I interim authorization. Copies of the State submittal are available for public inspection and comment as noted above.

Conduct of Hearing

The hearing is intended to provide an opportunity for interested persons to present their views and submit information for consideration by EPA in the decision whether to grant Tennessee interim authorization for Phase I of the RCRA program.

The hearing will be informally structured. Individuals providing oral comments will not be sworn in, nor will formal rules of evidence apply. Questions may be posed by EPA personnel to persons providing oral comments; however, no cross-examination by other participants will be allowed.

The State will testify first and present a short overview of the State program. Other commenters will then be called in the order in which their requests were received by EPA. As time allows, persons who did not sign up in advance but who wish to comment on the State's application for Phase I interim authorization will also be given an opportunity to testify. Each organization or individual will be allowed as much time as possible for oral presentation based on the number of requests to participate and the time available for the hearing. As a general rule, in order to ensure maximum participation and allotment of adequate time for all speakers, participants should limit the length of their statements to five minutes.

Dated: November 19, 1980.

John A. Little,

Acting Regional Administrator.

[FR Doc. 80-37130 Filed 11-26-80; 8:45 am]

BILLING CODE 6560-30-M

40 CFR Part 180

[PP 8E2123/P155; PH-FRL 1683-8]

O,O-Dimethyl *S*-[4-Oxo-1, 2, 3-Benzotriazin-3(4*H*)-yl)Methyl Phosphorodithioate; Proposed Tolerances

AGENCY: Environmental Protection Agency (EPA).

ACTION: Proposed rule.

SUMMARY: This notice proposes that tolerances be established for residues of the insecticide (*O,O*-dimethyl *S*-[(4-oxo-1,2,3-benzotriazin-3(4*H*)-yl)methyl] phosphorodithioate) in or on the raw agricultural commodities birdsfoot trefoil and birdsfoot trefoil hay. This proposal was submitted by the Interregional Research Project No. 4 (IR-4). This amendment will establish a maximum permissible level for residues of the insecticide on birdsfoot trefoil at 2 parts per million (ppm) and birdsfoot trefoil hay at 5 ppm.

DATE: Comments must be received on or before December 29, 1980.

ADDRESS: Written comments to: Clinton Fletcher, Rm. E-124, Office of Pesticide Programs, Registration Division (TS-767), Environmental Protection Agency, 401 M St., SW., Washington, D.C. 20460.

FOR FURTHER INFORMATION CONTACT: Clinton Fletcher, (202-426-0223).

SUPPLEMENTARY INFORMATION: The Interregional Research Project No. 4 (IR-4), New Jersey Agricultural Experiment Station, PO Box 231, Rutgers University, New Brunswick, NJ 08903, has submitted a pesticide petition No. 8E2123 to EPA on behalf of the IR-4 Technical Committee and the Agricultural Experiment Station of Missouri.

This petition requested that the Administrator, pursuant to section 408(e) of the Federal Food, Drug, and Cosmetic Act, propose the establishment of a tolerance for residues of the subject insecticide (*O,O*,-dimethyl *S*-[(4-oxo-1,2,3-benzotriazin-3(4*H*)-yl)methyl] phosphorodithioate) in or on the raw agricultural commodities birdsfoot trefoil at 2 ppm and birdsfoot trefoil hay at 5 ppm.

The data submitted in the petition and all other relevant material have been evaluated. The pesticide is considered useful for the purpose for which the tolerances are sought. The toxicology data considered in support of the proposed tolerances were a two-year dog feeding study with a no-observed-effect-level (NOEL) of 5 ppm; a two-year rat feeding study with a NOEL of 5 ppm; a three-generation mouse reproduction study with a NOEL of greater or equal to 5 mg/kg/day; a rabbit teratology study negative at greater or equal to 0.75 milligram (mg)/kilogram (kg) of body weight (bw)/day (highest level fed); teratology studies in the rat and mouse both with a NOEL of greater or equal to 5 mg/kg/day; a hen neurotoxicity study, negative up to 100 ppm (highest level fed); a National Cancer Institute study indicating negative oncogenic potential in $B_6C_3F_1$ mice and inconclusive results for male Osborne-Mendel rats. The acceptable daily intake (ADI) for humans has been calculated to be 0.025 mg/kg of bw/day based on the NOEL of the two-year rat feeding study using a 10-fold safety factor, a factor base on cholinesterase activity associated with organo-phosphate pesticides. Thus, for a 60 kg human, the maximum permissible intake (MPI) for this chemical is calculated to be 1.5 mg/day. Since birdsfoot trefoil is not a human food, the requested tolerances will not alter the human theoretical maximal residue contribution (TMRC).

The recently completed oncogenicity study by the National Cancer Institute indicated that the compound had no oncogenic potential in one rodent species while, in a second species, the data were inconclusive and insufficient to judge the potential oncogenicity of the subject pesticide. The results would warrant a retesting in rats to clarify the remaining uncertainty raised by the present study. In a letter of March 3, 1980, the registrant has agreed to initiate a second mouse oncogenic study with a scheduled completion in March of 1983.

The nature of the residue is adequately understood and an adequate analytical method (Meagher colorimetric method) is available for enforcement purposes. The proposed tolerances aFederal Register. re adequate to insure that the established tolerances in meat and milk will not be exceeded. Fresh trefoil and its hay are not poultry feed items; thus, no problems with respect to residues in poultry and eggs are expected. There are presently no actions pending against the continued registration of this chemical.

Thus, based on the above information considered by the Agency, the fact that birdsfoot trefoil is not a human food, and that currently established tolerance for meat and milk are adequate to cover any residues from the animal feed, it is concluded that the tolerances of 2 ppm in or on birdsfoot trefoil and 5 ppm in or on birdsfoot trefoil hay established by

amending 40 CFR Part 180 would protect the public health. It is proposed, therefore, that the tolerance be established as set forth below.

Any person who has registered or submitted an application for registration of a pesticide, under the Federal Insecticide, Fungicide, and Rodenticide Act, which contains any of the ingredients listed herein, may request on or before December 29, 1980 that this rulemaking proposal be referred to an advisory committee in accordance with section 408(e) of the Federal Food, Drug, and Cosmetic Act.

Interested persons are invited to submit written comments on the proposed regulation. The comments must bear a notation indicating both the subject and the petition and document control number, "PP 8E2123/P155". All written comments filed in response to this petition will be available for public inspection in the office of Clinton Fletcher from 8:00 a.m. to 4:00 p.m. Monday through Friday, except holidays.

Note.—Under Executive Order 12044, EPA is required to judge whether a regulation is "significant" and therefore subject to the procedural requirements of the Order or whether it may follow other specialized development procedures. EPA labels these other regulations "specialized". This proposed rule has been reviewed, and it has been determined that it is a specialized regulation not subject to the procedural requirements of Executive Order 12044.

(Sec. 408(e), 68 Stat. 514 (21 U.S.C. 346a(e))

Dated: November 18, 1980.

Douglas D. Campt,

Director, Registration Division Office of Pesticide Programs.

Therefore, it is proposed that Subpart C of 40 CFR Part 180 be amended by alphabetically inserting "birdsfoot trefoil and birdsfoot trefoil hay" in the table under § 180.154 to read as follows:

§ 180.154 O, O-dimethyl S-[(4-oxo-1,2,3-benzotriazin-3 (4H)-yl)methyl] phosphorodithioate; tolerances for residues.

* * * * *

Commodity	Part per million
* * * * *	
Birdsfoot trefoil	2
Birdsfoot trefoil hay	5
* * * * *	

[FR Doc. 80-37083 Filed 11-26-80; 8:45 am]

BILLING CODE 6560-32-M

GENERAL SERVICES ADMINISTRATION

41 CFR Chs. 101 and 105

Improving Government Regulations; Agenda of Significant Regulatory Activity

AGENCY: General Services Administration.

ACTION: Semiannual agenda.

SUMMARY: This agenda announces the significant regulatory actions that GSA plans for the 6-month period from December 1980 to May 1981. This agenda was developed under the guidelines in Executive Order 12044, Improving Government Regulations (43 FR 12661, Mar. 24, 1978). GSA's purpose in publishing this agenda is to allow interested persons an opportunity to participate in the early stages of the rulemaking process.

FOR FURTHER INFORMATION CONTACT: Stanley W. Bowers, Chief, Directives Management Branch (202-566-0666).

SUPPLEMENTARY INFORMATION: On December 4, 1978, GSA published its final report on implementation plans for Executive Order 12044 at 43 FR 56728. As explained in the report, GSA will publish a semiannual agenda of significant regulatory activity during May and November of each year. The agenda lists, for each of GSA's services and staff offices, new significant regulations that are being considered, changes that are planned to existing significant regulations, significant regulations that will be reviewed during the upcoming 6-month period, and the status of items from the previous agenda.

Date: November 21, 1980.

Ray Kline,

Acting Administrator of General Services.

NATIONAL ARCHIVES AND RECORDS SERVICE

A. New Regulations

No new significant regulations are being considered.

B. Changes to Existing Regulations

1. Public Use of Archives and FRC Records (41 CFR 105-61.1)—in which only § 105-61.104, Access to National Security Information, has been defined as significant—was revised and published as a final rule at 44 FR 18498 (Mar. 28, 1979). This regulation is currently undergoing futher revision.

a. *Need for change:* To resolve conflicts on procedures for implementing Executive Order 12065, National Security Information, for handling Freedom of Information Act requests under 5 U.S.C. 552.

b. *Legal basis:* Federal Property and Administrative Services Act of 1949, as amended (Sec. 205(c), 63 Stat. 390; 40 U.S.C. 486(c)).

c. *Contact point:* Adrienne C. Thomas, Director, Planning and Analysis Division (NAA) (202-523-3214).

d. *Regulatory analysis:* Will not be prepared.

C. Regulations Scheduled for Review

No significant regulations are presently being reviewed.

D. Status of Agenda Items Published on May 30, 1980 (45 FR 36440)

1. Public Use of Donated Historical Materials (41 CFR 105-61.2). GSA was considering the addition of a provision under which falsification of information by researchers could provide grounds for denying access to records. However, upon further review it was decided that no changes will be made to the existing regulation at this time.

a. *Contact point:* Richard A. Jacobs, Deputy Assistant Archivist, Office of Presidential Libraries (NL) (202-523-3073).

OFFICE OF HUMAN RESOURCES AND ORGANIZATION

A. New Regulations

No new significant regulations are being considered.

B. Changes to Existing Regulations

No significant regulations are scheduled to be changed.

C. Regulations Scheduled for Review

No significant regulations are scheduled for review.

D. Status of Agenda Items Published on May 30, 1980 (45 FR 36440)

1. New regulations. Procedures for implementing section 504 of the Rehabilitation Act of 1973. These regulations are intended to ensure nondiscrimination against handicapped persons in programs and activities that receive financial assistance from GSA.

a. A proposed rule was published on October 30, 1979 (44 FR 62298). GSA has evaluated the comments received on the proposal and plans to issue a final rule by January 1981.

b. *Contact point:* Jacquie C. Perry, Office of Civil Rights (202-566-1790).

TRANSPORTATION AND PUBLIC UTILITIES SERVICE

A. New Regulations

No new significant regulations are being considered.

B. Changes to Existing Regulations

1. Federal Travel Regulations (FTR) (41 CFR Part 101-71)—to provide employees performing official business for the Government payment of additional travel expenses under certain circumstances and to authorize additional relocation allowances that are reimbursable on a permanent change of station (PCS).

a. *Need for change:* Based on a study undertaken by the General Services Administration, the Office of Management and Budget, and the Office of Personnel Management; and on agency and employee surveys.

b. *Legal basis:* Executive Order 11609 (July 22, 1971) and the Travel Expense Amendments Act of 1975 (Pub. L. 94-22, May 19, 1975).

c. *Contact point:* Audrey Rish, Federal Travel Management Division, Office of Transportation and Travel Management (202-275-0651).

d. *Regulatory analysis:* Will not be prepared.

e. *Additional information:* The regulatory changes listed above will be published in the Federal Register as a proposed rule to allow for agency comments before a final rule is issued.

C. Regulations Scheduled for Review

1. Federal Travel Regulations (FTR) (41 CFR Part 101-7)—to revise high rate geographical areas and mileage allowances.

a. *Contact point:* Audrey Rish, Federal Travel Management Division, Office of Transportation and Travel Management (202-275-0651).

D. Status of Agenda Items Published on May 30, 1980 (45 FR 36440)

1. New regulations. Policies and procedures for travel between city pairs.

a. Federal Property Management Regulations (FPMR) Temporary Regulation A-15 became effective on July 1, 1980 (45 FR 44951).

Contact point: John Millington, Transportation Management Division, Office of Transportation and Travel Management (202-275-6144).

2. Changes to existing regulations.

a. Federal Travel Regulations (FTR) (41 CFR Part 101-7)—implementation of FPMR Temporary Regulation A-15, Travel between city pairs.

(1) FPMR Temporary Regulation A-11, Supplement 10, became effective on July 1, 1980 (45 FR 44953).

Contact point: Phyllis Hickman, Travel Management Division, Office of Transportation and Travel Management (202-275-0651).

b. Federal Travel Regulations (FTR) (41 CFR Part 101-7)—revision of high rate geographical areas, increase in per diem and actual subsistence allowances, and increase in reimbursement for the use of privately owned conveyances.

(1) FPMR Temporary Regulation A-11, Supplement 11, became effective on October 5, 1980 (45 FR 65146).

Contact point: Phyllis Hickman, Federal Travel Management Division, Office of Transportation and Travel Management (202-275-0651).

3. Status of agenda items published on November 30, 1979 (44 FR 62298) and May 30, 1980 (45 FR 36440).

a. Federal Travel Regulations (FTR) (41 CFR Part 101-7)— to revise per diem and actual subsistence provisions (Parts 7 and 8 of chapter 1).

(1) This project is pending further review and approval by the General Accounting Office and the President's Management Improvement Council.

Contact point: Audrey Rish, Federal Travel Management Division, Office of Transportation and Travel Management (202-275-0651).

FEDERAL PROPERTY RESOURCES SERVICE

A. New Regulations

1. Utilization, Donation, Sale, Abandonment, or Destruction of Hazardous Materials (41 CFR Chapter 101).

a. *Need for regulations:* The number of materials identified as hazardous is rapidly increasing, and their disposition is a sensitive matter. A comprehensive regulation is necessary to ensure proper identification and disposal of hazardous materials.

b. *Legal basis:* Federal Property and Administrative Services Act of 1949, as amended (Sec. 205(c), 63 Stat. 390; 40 U.S.C. 486(c)).

c. *Contact point:* William Albee, Regional Operations Branch (202-557-0716).

d. *Regulatory analysis:* Will not be prepared.

B. Changes to Existing Regulations

1. Utilization and Disposal of Personal Property Pursuant to Exchange/Sale Authority (41 CFR Part 101-46)—revise and clarify.

a. *Need for change:* The results of a review by GSA employees of proposed Federal Acquisition Regulation (FAR) Subpart 17.3, Exchange/Sale of Nonexcess Personal Property, indicate that 41 CFR Part 101-46, as currently written, does not provide a viable basis for development of the FAR subpart.

b. *Legal basis:* Section 201(c) of the Federal Property and Administrative Services Act of 1949, 68 Stat. 384, as amended (40 U.S.C. 481(c)).

c. *Contact point:* Alan V. Trickey, Utilization Division (202-557-0726).

d. *Regulatory analysis:* Will not be prepared.

C. Regulations Scheduled for Review

No significant regulations are scheduled for review.

D. Status of Agenda Items Previously Published

No significant regulatory actions are pending.

OFFICE OF GENERAL COUNSEL

A. New Regulations

No new significant regulations are being considered.

B Changes to Existing Regulations

No significant regulations are scheduled to be changed.

C. Regulations Scheduled for Review

No significant regulations are scheduled for review.

D. Status of Agenda Items Published on May 30, 1980 (45 FR 36440)

1. Public Availability of Agency Records and Informational Materials (41 CFR Part 105-60); GSA intends to revise its regulations covering public requests for GSA materials under the Freedom of Information Act (FOIA). Currently, 41 CFR Part 105-60 covers both procedures for the public to follow when requesting GSA information and rules for GSA employees to follow when they receive these requests from the public. GSA is considering revising these regulations to separate the rules that apply to the public from those that apply only to GSA employees. In the process, the rules for public access to information will be simplified and clarified.

a. A proposed rule was published in the Federal Register on November 3, 1980 (45 FR 72714). The comment period closes on January 2, 1981.

b. *Contact point:* Rebecca Thompson, Administration and Records Division (202-566-1460).

AUTOMATED DATA AND TELECOMMUNICATIONS SERVICE

No significant regulatory actions are planned.

FEDERAL SUPPLY SERVICE

No significant regulatory actions are planned.

OFFICE OF ACQUISITION POLICY

No significant regulatory actions are planned.

OFFICE OF PLANS, PROGRAMS, AND FINANCIAL MANAGEMENT

No significant regulatory actions are planned.

PUBLIC BUILDINGS SERVICE

No significant regulatory actions are planned.

[FR Doc. 80-37034 Filed 11-26-80; 8:45 am]
BILLING CODE 6820-34-M

FEDERAL EMERGENCY MANAGEMENT AGENCY

44 CFR Part 9

[Docket No. FEMA Gen. 9-A]

Floodplain Management and Protection of Wetlands

AGENCY: Federal Emergency Management Agency (FEMA).

ACTION: Request for Comment on Proposal to Amend Rule.

SUMMARY: This proposal requests comments on § 9.9(e)(6) and § 9.11(e)(4) of the FEMA Regulation, 44 CFR Part 9, "Floodplain Management and Protection of Wetlands." The two sections, which are presently in effect, deal with denial of new or renewal flood insurance for structures in certain situations where floodplain management requirements have not been met. While the rules provision remain in effect, FEMA does not intend to enforce these regulations pending this public comment. A notice of this intent of non-enforcement is being published elsewhere in the Federal Register today (see Table of Contents). FEMA proposes no change in the rule; others may.

DATE: Comments no later than January 27, 1981.

ADDRESSES: Send comments to Rules Docket Clerk, Office of the General Counsel, Federal Emergency Management Agency, Room 801, 1725 I Street, N.W., Washington, DC 20472.

FOR FURTHER INFORMATION CONTACT: John Scheibel, Assistant to the General Counsel for Environmental Quality and Hazard Mitigation, Federal Emergency Management Agency, Washington, DC 20472; telephone (202) 634-1990.

SUPPLEMENTARY INFORMATION: On September 9, 1980, FEMA issued 44 CFR Part 9, Floodplain Management and Protection of Wetlands (Federal Register, Vol. 45, pp. 59520-59538). Included in the regulations are two provisions which deny the availability of flood insurance under certain circumstances. Section 9.9(e)(6) states that in any case in which the Regional Director of FEMA has selected the "no action" option for a structure in a floodplain or wetland, the Federal Insurance Administration (FIA) may not provide a new or renewed contract of flood insurance for that structure. Section 9.11(e)(4) provides that where the Regional Director has been precluded from providing assistance for a new or substantially improved structure in a floodway, FIA may not provide a new or renewed policy of flood insurance for that structure.

FEMA had issued interim regulations on floodplain management and had requested public comment on these by December 27, 1979 (Federal Register, Vol. 45, pp. 76510-76522). This interim regulation did not expressly deal with denial of flood insurance coverage. Although FEMA is of the view that the December 27 regulation fairly apprised all of what eventually appeared in the final rule, it is now requesting comment on the specific point in view of Pub. L. 96-369.

That law, by virtue of its incorporation of certain provisions in pending appropriation bills, denies FEMA any finding to implement §§ 9.9(e)(6) and 9.11(e)(4) until FEMA issues these provisions for notice and comment and, in no event, prior to January 31, 1981.

Elsewhere in the Federal Register of today (see Table of Contents) there is a notice that FEMA is suspending enforcement of this regulation pending receipt of public comment.

As stated in the preamble to the final rule published in the Federal Register on September 9, 1980, FEMA has determined that FIA has the authority to restrict the availability of flood insurance, even in communities participating in the National Flood Insurance Program. FEMA's capacity to enforce implementation of this authority is thus being temporarily restricted.

Accordingly, it is proposed to readopt Part 9 of Title 44 of the Code of Federal Regulations as follows:

1. Section 9.9(e)(6) reads as follows:

§ 9.9. Analysis and evaluation of practicable alternatives.

* * * * *

(e) *Reevaluation of Alternatives.*

(6) In any case in which the Regional Director has selected the "no action" option, FIA may not provide a new or renewed contract of flood insurance for that structure.

* * * * *

2. Section 9.11(e)(4) reads as follows:

§ 9.11 Mitigation.

* * * * *

(e) In the implementation of the National Flood Insurance Program, the Federal Insurance Administrator:

* * * * *

(4) In any case in which the Regional Director has been, pursuant to § 9.11(d)(1), precluded from providing assistance for a new or substantially improved structure in a floodway, FIA may not provide a new or renewed policy of flood insurance for that structure.

Dated: November 18, 1980.

John W. Macy, Jr.,
Director.

[FR Doc. 80-36574 Filed 11-26-80; 8:45 am]
BILLING CODE 6718-01-M

DEPARTMENT OF TRANSPORTATION

National Highway Traffic Safety Administration

49 CFR Part 571

Federal Motor Vehicle Safety Standards; Glazing Materials

AGENCY: National Highway Traffic Safety Administration.

ACTION: Grant of petition for rulemaking.

SUMMARY: The purpose of this notice is to announce the granting of petitions for rulemaking filed by Rohm and Haas Company, General Electric Company (GE) and the Society of Automotive Engineers (SAE) regarding Safety Standard No. 205, *Glazing Materials.* All three petitioners have asked the agency to upgrade the standard by adopting the latest version of the American National Standard Safety Code for Glazing ("ANS Z26"), which is incorporated by reference in Safety Standard No. 205. At present, the standard refers to the 1969 version of "ANS Z26". A revised edition was published by the American National Standards Institute on January 26, 1977. The petitioners urge the agency to incorporate this version of "ANS Z26" in the standard because they believe it reflects the latest advancements in glazing technology.

In addition, GE has asked the agency to amend Standard No. 205 to permit a new type of bullet resistant glazing. This new item specification would allow a transparent, plastic, bullet resistant shield to be installed inside a vehicle behind the windshield. The shield would be separate from the windshield glazing. GE states that because the plastic glazing materials used to make the shield are lightweight, small businesses would be able to provide ballistics protection for their employees at a lower cost.

NHTSA believes that the petitions filed by Rohm and Haas, GE, and SAE have merit, and they are hereby granted. The agency will commence rulemaking to determine the safety consequences of the requested amendments. The granting of a petition does not mean that a rule will necessarily be issued. The determination whether to issue a rule is made in the course of the rulemaking proceeding, in accordance with statutory criteria.

FOR FURTHER INFORMATION CONTACT: Mr. Edward Jettner, National Highway Traffic Safety Administration, Office of Vehicle Safety Standards, Room 5320, 400 Seventh Street SW, Washington, D.C. 20590 (202-426-2264).

Issued on November 18, 1980.

Michael Finkelstein,

Associate Administrator for Rulemaking

[FR Doc. 80-36679 Filed 11-26-80; 8:45 am]

BILLING CODE 4910-59-M

INTERSTATE COMMERCE COMMISSION

49 CFR Parts 1039, 1090, and 1300

[Ex Parte No. 230 (Sub-5)]

Improvement of TOFC/COFC Regulation

AGENCY: Interstate Commerce Commission

ACTION: Notice of proposed rule (exemption).

SUMMARY: The Commission is proposing to exempt rail and truck service provided by rail carriers in connection with trailer on flatcar (TOFC) and container on flatcar (COFC) service from Title 49, Subchapter IV of the U.S. Code. The Proposed exemption is based on findings that regulation is not necessary to carry out the transportation policy of 49 U.S.C. 10101a or to protect shippers from the abuse of market power by railroads. The proposed exemption is intended to remove unnecessary regulation and to permit railroads to market TOFC and COFC services in response to demand for the services.

DATES: The effective date of the proposed rule (exemption) is January 27, 1981. Comments are due December 29, 1980.[1]

ADDRESS: An original and 15 copies of comments should be sent to: Room 5340, Interstate Commerce Commission, Washington, DC 20423.

FOR FURTHER INFORMATION CONTACT: Richard B. Felder or Jane F. Mackall, (202) 275-7656.

SUPPLEMENTARY INFORMATION:

Background

This proceeding was instituted by an advance notice of proposed rules serviced August 21, 1979, and published in the Federal Register August 22, 1979.

The notice stated that we were considering the institution of a rulemaking proceeding which would:

(1) exempt from regulation (under 49 U.S.C. 10505) rail transportation of TOFC-COFC shipments, either in whole or in part; (2) provide expedited and simplified procedures for licensing new TOFC-COFC service by motor carriers, including those affiliated with railroads; (3) establish a "zone of reasonableness" within which motor carrier TOFC-COFC rates could be raised or lowered; (4) modify existing regulations which prohibit motor common carriers from exchanging TOFC-COFC shipments with railroads at other than authorized service points; and (5) clarify the circumstances under which motor contract carriers can substitute rail service for all-motor service.

Since publication of that notice, Congress has enacted the Motor Carrier Act of 1980 and the Staggers Rail Act of 1980. The new laws have profoundly affected the content, direction, and procedure of this proceeding. Our exemption authority related to transportation provided by railroads has been strengthened and clarified. Non-rail regulatory barriers have been essentially eliminated.

The Staggers Rail Act of 1980 authorizes exemption of service provided by rail carriers in all instances where regulation is not needed to prevent abuses of market power. The Congress expects us to undertake a careful examination of railroad regulation and eliminate or reduce restrictions on railroad price and service changes.[2] In particular, the legislative history focuses on the need to pursue vigorously opportunities for exemptions. The Congress recognized that we are in the best position to identify likely candidates for exemption. Congress has stated it is anxious for us to remove existing regulatory barriers and reserve judgment on potential problems until after exemptions have been granted.[3]

The statute singles out TOFC/COFC service as a candidate for exemption. Section 10505(f) provides, "The Commission may exercise its authority under this section to exempt transportation that is provided by a rail carrier as a part of a continuous intermodal movement."

We believe that a total exemption for this traffic is appropriate based on the standards of 49 U.S.C. 10505. We are proposing to exempt from economic regulaton, rail and truck service provided by railroads as part of a continuous intermodal movement. The responses to the advance notice issued in this proceeding confirmed our belief that the potential for railroad abuses of market power in TOFC/COFC service is virtually non-existent.

The comments demonstrate that this traffic is highly competitive with motor carrier service, Rate levels, transit times, and loss and damage experience determine the choice of transport mode. Shipper comments indicate that the rate spread between TOFC/COFC and trucks has virtually disappeared. Neither mode has the inherent ability to dominate the market for the type of freight which is shipped in trucks or containers.

Other modes of transportation are not the only source of competition to the railroads for this traffic. Actual and potential intramodal competition is a significant factor in the market for TOFC/COFC service. The operational flexibility of the motor carrier portion of a TOFC/COFC movement permits numerous railroads to serve areas beyond their fixed systems of tracks.

The presence of actual and potential intermodal and intramodal competition, and the historical evidence support our view that TOFC/COFC service is sufficiently competitive to insure that the public interest will be protected without regulation.

Numerous participants support our views and have pointed out how regulatory barriers impede the growth of TOFC/COFC service. DuPont welcomes the exemption as an opportunity to negotiate for price and service options which meet its particular needs. It looks forward to the end of complex and inflexible rate structures and service plans. DuPont recognizes that regulation of this competitive service is serving no useful purpose.

Other commenters, like American Standard, focus on service problems rather than regulatory barriers as the main impediment to successful marketing of TOFC/COFC service. American Standard notes that it will forego substantial rate advantages and select a carrier based on its ability to provide dependable service. Nevertheless, American Standard recognizes the need to change regulations and practices which in its words "artificially" impede the development of intermodal services.

Transamerica Interway, which leases 27 percent of the TOFC/COFC fleet to

[1] The Staggers Rail Act of 1980 removed the requirement that a proceeding be held to consider an exemption. We have already received one round of comments. We believe that this abbreviated procedure is appropriate under these circumstances.

[2] H.R. Rep. No. 96-1430, 96th Cong. 2d Sess. 105 (1980).

[3] See footnote 2.

rail and water carriers, favors an exemption of this service. Its experience here and in Canada suggests that regulation of TOFC/COFC service is not required.

Individual railroads like Southern Pacific support exemption of TOFC/COFC. It believes that regulation has adversely affected the development and marketing of this service. SP is convinced that regulation has impaired its ability to respond to its unregulated and less regulated competitors. Southern Pacific is anxious to put an end to regulatory costs which, in its view, produce no benefits.

The Department of Justice also favors a total exemption of TOFC/COFC service. Like Southern Pacific, DOJ urges removing restrictions on this service and allowing intermodal service to develop as a natural respone to demand for the service.

Not all participants favor an exemption for TOFC/COFC service. A number of motor carriers and shippers are afraid that railroads will abuse their market power to the disadvantage of the public. Motor carriers are particularly afraid that exempt railroads and their trucking affiliates would exclude regulated truckers from TOFC/COFC traffic in the future. In view of the competitive nature of this service, we are relatively certain that these fears are groundless.

Trucking companies that can offer a low cost and efficient connection to a railroad should have no fear of losing business. Railroads and motor carriers can continue to negotiate rate and service arrangements. The biggest change under the exemption will be the fact that railroads will be in a better position to provide a complete rail/motor service. Trucking companies will face more competition but are unlikely to suffer abuses of market power. In the highly competitive environment which should develop, trucking companies will have ample opportunities to join the railroads as business partners or compete with them.

It is also clear that the public interest, as defined by the railroad transportation policy of 49 U.S.C. 10101(a), will be served by exempting this traffic. An exemption will place primary reliance on market forces, not government regulations, to establish reasonable rates and maintain necessary services. The public benefits promised by the exemption mesh well with the goals of the railroad transportation policy.

The primary area of controversy concerning the exemption is the question of antitrust immunity for collectively established rates. Users and providers of TOFC/COFC service are not anxious to abandon the opportunity to set their rates collectively. The railroads are virtually unanimous in their request that anititrust immunity be continued for collectively establishing TOFC/COFC rates. Many shippers and shippers associations are also anxious to preserve a forum for collective discussion of TOFC/COFC rates. All these participants would like to have a safe, legal way to fix uniform prices for services which move over routes of more than one railroad. The railroads want to be able to continue to formulate single-factor, joint through rates for this service over competing routes. We faced and overcame the same arguments in exempting fresh fruits and vegetables, *Rail General Exemption Authority* 361 I.C.C. 374 (1979). In that proceeding we noted that a grant of antitrust immunity under 49 U.S.C. 10706 requires a finding that the immunity is necessary to further the goals of the national transportation policy. We than observed that an exemption can only be granted if regulation is not necessary to further the national transportation policy. Under these circumstances, a grant of immunity was deemed to be incompatible with granting the exemption.

In this proceeding we are again unwilling to sacrifice the benefits of competition promised by the exemption by continuing to offer antitrust immunity to the railroads. An exemption of TOFC/COFC service will enhance both intermodal and intramodal competitive opportunities. Railroads will be able to offer a complete intermodal service without regulatory restraints. They will be able to compete vigorously with trucks and with other railroads. If we were to immunize TOFC/COFC ratemaking from the antitrust laws, most of these benefits would be lost.

The railroads' expressed intention of publishing identical single-factor, joint through rates over competing routes would completely negate the intended benefits of the exemption. All potential intramodal competition would be lost. Even the benefits of competition with other modes would be minimized. This is true because collectively established joint rates would mask the efficiencies of individual routes in an average cost rate structure. The benefits of competitive pricing by individual companies will be virtually lost if rates are permitted to be set collectively.

As we noted before, the Congress expects us to identify exemption candidates, decide whether exemption is appropriate, grant exemptions, and solve any problems which develop after we have had some experience under the exemption. This approach is particularly appropriate for the question of antitrust immunity. Railroads and users of TOFC/COFC services have defined their relationships in certain ways because of the existence of antitrust immunity. We see no reason why the same services cannot be arranged and sold without antitrust immunity. The fact that certain users or sellers may have to conduct their businesses somewhat differently is not a good reason to continue antitrust immunity for TOFC/COFC service.

Other Issues

The advance notice only addressed possible exemption of domestic motor-rail traffic. Several railroad and port participants have pointed out that the relationship between domestic and foreign service and ex-motor and ex-water service makes it both difficult and unwise to exempt any less than all rail TOFC/COFC service. We agree. All forms of TOFC/COFC service are highly competitive. Ex-water service in both domestic and foreign markets would benefit if unproductive regulatory restraints were removed. Under the new law, our ability to extend the exemption to all "continuous intermodal movements" is clear and we see no reason to omit ex-water service here.

The new law also resolves the question of railroad liability for loss and damage under exemption. Section 10505(e) provides the standards for liability which railroads must apply to exempt services. That section requires full value rates or limited liability rates where the shipper consents.

Three important motor carrier issues were settled by the Motor Carrier Act of 1980. The new law provides eased entry standards and a zone of rate freedom.[4] It also allows motor carriers to deliver TOFC traffic to rail ramps at other than authorized service points.[5]

The advance notice raised the possibility of exempting the motor portion of TOFC service. Under the new law exemption is limited to "transportation that is provided by a rail carrier." Although exemption of the motor portion not provided by a rail carrier is no longer possible, we are satisified that many of the regulatory barriers to intermodal service which we identified in the advance notice have been removed by the Motor Carrier Act of 1980.

Other issues such as appropriate treatment of railroad affiliated motor carriers, possible expansion of motor carrier terminal areas, and several proposals for regualtory changes offered

[4] 49 U.S.C. 10922(b) and 10708(d)

[5] 49 U.S.C. 10922(j) and 10923(e)

by freight forwarders, shipper associations, and shipper agents will not be discussed in this notice. To the extent that any participant has a continuing interest in these subjects, in light of the proposed exemption, their comments should so indicate.

The proposed rules implementing the exemption are contained in the appendix.

Environmental Impact. It is unlikely that the exemption will divert such a substantial amount of motor carrier traffic to TOFC–COFC that significant environmental or energy impacts would result. Compared with motor carriage, TOFC/COFC generally is a more energy efficient transportation alternative. Other areas of environmental concern, including transportation safety, and preservation of natural resources (essentially by extending roadway life), should be enhanced as a result of the exemption. Although the exemption probably will improve overall air quality, should traffic congestion in terminal areas increase, air quality in those areas may be affected adversely. Comments addressing energy and environmental concerns are invited.

This proposed rule is issued under the authority of sections 553 and 559 of the Administrative Procedure Act (5 U.S.C. 553 and 559) and sections 10321(a) and 10505 of Title 49 (49 U.S.C. 10321(a) and 10505).

Decided: November 19, 1980.

By the Commission, Chairman Gaskins, Vice Chairman Gresham, Commissioners Clapp, Trantum, Alexis, and Gilliam.

Agatha L. Mergenovich,

Secretary.

Appendix

Chapter X of Title 49 of the Code of Federal Regulations is amended as follows:

PART 1039—RAILROAD CONTRACT RATES; POLICY STATEMENT

1. A new § 1039.11 reading as follows is added:

§ 1039.11 Rail intermodal transportation exemption.

Railroad and truck transportation provided by a rail carrier as part of a continuous intermodal movement is exempt from the provisions of Subtitle IV of Title 49 with certain exceptions. Carriers must continue to comply with Commission accounting and reporting requirements. The rail carriers must send a letter of notification to this docket within 30 days of the date they begin using the exemption. All railroad tariffs pertaining to the transportation of intermodal freight will no longer apply except to the extent adopted by carrier quotations. Nothing in this exemption shall be construed to affect our jurisdication under section 10505 or our ability to enforce this decision or any subsequent decision made under authority of this exemption section. This exemption shall remain in effect, unless modified or revoked by a subsequent order of this Commission.

(49 U.S.C. 10321(a) and 10505)

Part 1090 is revised to read as follows:

PART 1090—PRACTICES OF CARRIERS INVOLVED IN THE INTERMODAL MOVEMENT OF CONTAINERIZED FREIGHT

Sec.
1090.1 Definition of TOFC/COFC service.
1090.2 Use of TOFC/COFC service by motor and water carriers.

Authority: 49 U.S.C. 10321(a) and 10762.

§ 1090.1 Definition of TOFC/COFC service.

Trailer-on-flatcar (TOFC/COFC) service means the transportation on a rail car, in interstate or foreign commerce, of (a) any freight-laden highway truck, trailer, or semitrailer (or container portion of any highway truck, trailer, semitrailer having a demountable chassis) or (b) any empty highway truck, trailer, or semitrailer (or the container portion of any highway truck, trailer or semitrailer having a demountable chassis) when such empty equipment is being transported incidental to its prior or subsequent use in (TOFC/COFC) service.

§ 1090.2 Use of (TOFC/COFC) service by motor and water carriers.

(a) Except as otherwise may be prohibited by these rules, motor common and contract carriers, water common and contract carriers, and freight forwarders may utilize (TOFC/COFC) service in the performance of all or any portion of their authorized service.

(b) Motor and water common carriers shall utilize (TOFC/COFC) service only if their tariff publications give notice that such service may be utilized at their option, but that the right is reserved to the user of their services to direct that in any particular instance (TOFC/COFC) service not be utilized.

(c) Motor and water contract carriers may utilize (TOFC/COFC) service only if their transportation contracts and schedules make appropriate provision therefor.

(d) Tariffs of motor and water common carriers and contracts and schedules of motor and water contract carriers providing for the use of (TOFC/COFC) service shall set forth the points between which (TOFC/COFC) service may be utilized.

(49 U.S.C. 10321(a), and 10762)

PART 1300—FREIGHT TARIFFS: RAILROADS WATER CARRIERS, AND PIPELINE COMPANIES SUBJECT TO SECTION 6 OF THE INTERSTATE COMMERCE ACT AND CARRIERS JOINTLY THEREWITH

§§ 1300.0 and 1300.67 are amended as follows:

§ 1300.0 [Amended]

Section 1300.0(a)(1) is amended by amending the second sentence to read as follows:

(a) * * *

(1) * * * The regulations in this part shall also govern the construction and filing of tariffs naming through routes and joint rates over the lines of common carriers by water or pipeline, subject to the Interstate Commerce Act, on the one hand, and vessel-operating common carriers by water engaged in the foreign commerce of the United States, as defined in the Shipping Act, 1916, on the other hand, for the transportation of property between any place in the United States and any place in a foreign country. See § 1300.67.

§ 1300.67 [Amended]

Section 1300.67(b)(1) is amended by deleting from the first sentence (1) the word "railroad", including the comma, (2) the comma following the word "pipeline", and (3) the phrase "or a common carrier by railroad, jointly with a common carrier by motor vehicle", including the comma.

Section 1300.67(b)(2) is amended by deleting the sentence reading as follows: "If a tariff provides less-than-carload, less-than-container-load, or less-than-trailerload service, such service must be defined."

Section 1300.67(b)(5) is amended by deleting from the next to last sentence the parenthetical phrase reading as follows: "(such as tariffs containing joint rail-ocean rates, joint rail-motor-ocean rates, et cetera)".

(49 U.S.C. 10762)

[FR Doc. 80-37059 Filed 11-26-80; 8:45 am]

BILLING CODE 7035-01-M

DEPARTMENT OF COMMERCE

National Oceanic and Atmospheric Administration

50 CFR Parts 611 and 658

Shrimp Fishery of the Gulf of Mexico; Correction

AGENCY: National Oceanic and Atmospheric Administration (NOAA)/ Commerce.

ACTION: Correction to regulations.

SUMMARY: Plan approval and proposed regulations for the shrimp fishery of the Gulf of Mexico were published on Friday, November 7, 1980 (45 FR 74178). In that document, For Further Information, an incorrect contact person and phone number were listed. The contact person is Edward E. Burgess and the correct phone number is (813) 893-3721.

DATE: Effective November 28, 1980.

FOR FURTHER INFORMATION CONTACT: Mark Zilberberg, (202) 634-7432.

Signed in Washington, D.C. the 21st day of November, 1980.

Robert K. Crowell,

Deputy Executive Director, National Marine Fisheries Service.

[FR Doc. 80-36927 Filed 11-26-80; 8:45 am]

BILLING CODE 3510-22-M

50 CFR Part 652

Atlantic Surf Clam and Ocean Quahog Fisheries

AGENCY: National Oceanic and Atmospheric Administration (NOAA)/ Commerce.

ACTION: Notice of reopening of comment period.

SUMMARY: The purpose of this document is to provide for an additional comment period on a proposed closure to fishing for surf clams. The area affected is offshore of Atlantic City, New Jersey, and includes an area which was described in a notice in the Federal Register on September 11, 1980, plus an additional 25-mile area recommended at a public hearing held on September 26, 1980.

DATE: The comment period will be opened from November 21, 1980 through December 6, 1980.

ADDRESS: Information or comments should be forwarded to: Mr. Allen E. Peterson, Jr., Regional Director, National Marine Fisheries Service, State Fish Pier, Gloucester, Massachusetts, 01930. Mark the outside of the envelope "Surf Clam Comments".

FOR FURTHER INFORMATION CONTACT: Mr. Allen E. Peterson, Jr. at the address above or telephone (617) 281-3600.

SUPPLEMENTARY INFORMATION: On September 11, 1980, notice of a proposed closure of an area offshore of Atlantic City, New Jersey, to surf clam fishing was published. Section 652.23(b) of the fishery regulations provides for such a closure if a determination is made by the Regional Director that the area contains predominantly small surf clams.

At the public hearing held on September 26, 1980, to evaluate the social and economic importance of the proposed closed area to the fishery, a majority of those present supported an industry spokesman's recommendation to extend the proposed closure southward, so that it would include an additional 25 square miles. The extension was proposed and supported on the grounds that the area within the extension contains significant quantities of small clams which should be protected until their yield is enhanced, and that clams throughout the area are and should be treated as a homogeneous and contiguous resource. Concern was expressed that enforcement of a closure would be hampered unless the area was extended as proposed to cover more of the beds and form a more regular geometric area.

The extension was supported and endorsed by the Mid-Atlantic Fishery Management Council at its meeting on November 13, 1980. The Council recommended that the original proposal and the extension be closed as one unit. The unit closure as recommended fulfills the criteria for size distribution of clams as established in the regulation. This notice is to announce the location and extent of the recommended closure area and to solicit comments on the proposal.

The area is approximately 120 square miles, and includes an area which was closed in September of 1978. It is located between 3 and 9½ miles offshore of Atlantic City, New Jersey, and is defined as follows: Beginning at a point at 74°30'W. longitude and 39°15.5'N. latitude, which is exactly 3 nautical miles offshore of the nearest point of the baseline from which the territorial sea is measured; thence northeasterly along a line drawn in such a manner that each point on it is three nautical miles from the baseline from which the territorial sea is measured to 74°14.15'W. longitude and 39°28.5'N. latitude; thence southeasterly in a straight line to 74°5.7'W. longitude and 39°27.2'N. latitude; thence southwesterly in a straight line to 74°14.3'W. longitude and 39°17.62'N. latitude; thence southwesterly in a straight line to 74°23.5'W. longitude and 39°11.6'N. latitude; thence northwesterly in a straight line to 74°30'W. longitude and 38°15.5'N. latitude, the point of beginning.

Comments received during the reopened comment period will be considered and evaluated along with those comments already received. Based on the record thus assembled, a final determination will be made.

Signed at Washington, D.C. this 21st day of November, 1980.

Authority: 16 U.S.C. 1801 *et seq.*

Robert K. Crowell,

Deputy Executive Director, National Marine Fisheries Service.

[FR Doc. 80-37081 Filed 11-26-80; 8:45 am]

BILLING CODE 3510-22-M

50 CFR Part 611

Trawl Fisheries and Herring Gillnet Fishery Of The Eastern Bering Sea and Northeast Pacific; Preliminary Fishery Management Plan Amendment; Proposed Regulations; and Request for Comments

AGENCY: National Oceanic and Atmospheric Administration (NOAA), Commerce.

ACTION: Notice of amendment of preliminary fishery management plan, proposed regulations, and request for comments.

SUMMARY: The Assistant Administrator for Fisheries, NOAA (Assistant Administrator) has reviewed the preliminary management plan for the Trawl Fisheries and Herring Gillnet Fishery of the Eastern Bering Sea and Northeast Pacific (PMP) and has determined that the PMP should be amended. Certain amounts in the joint venture processing component (JVP) of domestic annual harvest (DAH) are considered inadequate and will be increased. Specifically, the JVP amount of yellowfin sole will be increased from 8,664 metric tons (mt) to 25,000 mt, and the JVP amount of founders will be increased from 100 mt to 3,000 mt. The reserve for Pacific code is increased by 12,00 mt and the total allowable level of foreign fishing is decreased accordingly.

Regulations are proposed to imlement the PMP as amended and will remain in effect until further amended or until

superseded by regulations implementing a fishery management plan for this fishery.

DATE: All comments must be submitted in writing on or before December 28, 1980.

ADDRESS: Comments should be sent to Denton R. Moore, Chief, Permits and Regulations Divisions, National Marine Fisheries Service, 3300 Whitehaven Street, N.W., Wahington, D.C., 20235. Telephone (202) 634-76432.

FOR FURTHER INFORMATION CONTACT: Robert W. McVey, Director, Alaska Region, National Marine Fisheries Service, P.O. Box 1668, Juneau, Alaska 99802 Telephone: (907) 568-7221.

SUPPLEMENTARY INFORMATION: The preliminary management plan for the Trawl Fisheries and Herring Gillnet Fishery of the Eastern Bering Sea and Northeast Pacific (PMP) was originally prepared under authority of the Fishery Conservation and Management Act of 1976 (Act) and was published in the Federal Register (42 FR 9298) on Bebruary 15, 1977.

During 1980, the PMP was amended twice to:

(1) Shift 7,814 mt of yellowfin sole from the total allowable level of foreign fishing (TALFF) to the joint venture processing (JVP) component of DAH;

(2) Increase the optimum yield (OY) for Pacific cod by 12,000 mt, from 58,700 mt to 70,700 mt (45 FR 70523).

The present action modified estimates of domestic annual harvest (DAH) by increasing the JVP amounts of hellowfin sole from 8,664 mt to 25,000 mt and flounders from 100 mt to 3,000 mt. Corresponding TALFFs will be 84,950 mt for yellowfin sole and 53,750 mt for flounders. These changes are based on survey results indicating increased joint venture harvests of those species.

The National Marine Fisheries Service surveyed the U.S. fishing industry to determine harvesting and processing capacities and the intent to harvest and process fish in the Bering Sea/Aleutian Islands area in 1981.

Amounts of fish (metric tons) U.S. processors reported that they intend to process in 1981 are shown in Table I. Expected doemstic annual processing (DAP) amounts currently established by the PMP (Table I) are considered to be adequate and will initially remain unchanged. The DAP for Pacific code remains the same becuase the processors' estimate is considered unrealistic in light of the small harvest in 1980 (2,800 mt).

The PMP contains a mechanism for the Regional Director to apportion those amounts of DAP to TALFF that he determines are excess to U.S. needs. The reserves (Table III) will be used to accommodate increased homestic harvest, if necessary.

TABLE I.—*Amounts of fish (mt) U.S. processors reportedly intend to process in the Bering Sea (DAP) and the initial DAP*

Species	1981 U S reported intention to process (mt)	Initial DAP (mt)
Pollock	9,982	10,500
Pacific cod	17,241	7,200
Atka mackerel	0	0
Yellowfin sole	227	1,200
Turbot	0	1,000
Flounder	907	1,200
Pacific ocean perch	454	1,100
Rockfish	227	1,100
Sablefish	522	1,000
Squid	0	0
Other species	0	1,800
Total	29,580	26,100

Joint venture catches of some species in 1980 were greater than amounts initially provided in the PMP and have been increased (Table II). Overall, joint ventures harvested approximately 50 percent of their 1980 allocation. Increases in JVP have resulted in equivalent decreases in TALFF (Table III).

TABLE II.—*Amounts of fish (mt) designated for delivery by U.S. fishermen to foreign processors at sel (JVP)*

Species	JVP
Pollock	9,050
Pacific cod	17,065
Atka mackerel	100
Yellowfin sole	[1] 25,000
Turbot	75
Flounder	[2] 3,000
Pacific ocean perch	1,660
Rockfish	450
Sablefish	400
Squid	50
Other species	200
Total	57,050

[1] A 24,150 mt increase over the initial level for 1980
[2] A 2,900 mt increase over 1980

Reserves (Table III) established by the PMP (5 percent of the OY for each species) are considered adequate to accommodate either the DAP or JVP components of DAH during the fishing year, should the amounts in either the DAP or JVP prove inadequate. The exception is the reserve for Pacific cod. Because domestic fisherman have expressed considerable interest in the expansion of cod production through catcher/processors or joint venture operations, the reserve for Pacific cod has been increased by 12,000 mt, and TALFF reduced accordingly.

TABLE III.—*Initial DAH, Reserve, and TALFF amounts (mt).*

Species	HAD	Reserve	TALFF
Pollock	19,550	50,000	1,040,450
Pacific cod	24,265	14,935	31,500
Atka Mackerel	100	1,240	23,460
Yellowfin sole	26,200	5,850	84,950
Turbot	1,075	4,500	84,425
Flounders	4,200	3,050	53,750
Pacific ocean perch	2,760	537	7,453
Rockfish	1,550	500	5,677
Sablefish	1,400	500	3,100
Squid	50	500	9,450
Other species	2,000	3,712	68,537
Total	83,150	85,324	1,402,752

The Assistant Administrator, having reviewed the PMP, has determined that the PMP is still necessary and appropriate to the conservation and management of eastern Bering Sea groundfish resources. The National Marine Fisheries Service has received a petition requesting an amendment to the PMP which would provide for an annual closure of Bering Sea Groundfish Areas I and II from October 1 through March 31, in order to reduce the incidental catch of salmon by foreign groundfish trawlers. An Advance Notice or Proposed Rulemaking (45 FR 65642) requested comments on the proposed action, and a response to the petition will be made by December 19, 1980. Additionally, an FMP for the Bering Sea groundfish fishery is nearing completition. The Environmental Impact Statement (EIS) accompanying the FMP addresses the question of salmon interceptions, as does a proposed amendment to the FMP which, if approved and implemented, would establish the salmon savings area referred to above. These ongoing administrative actions provide appropriate opportunities for the resolution of the problem of salmon interception. Therefore, the regulations implementing the PMP will be changed only as described above, and the unchanged provisions will remain in effect.

The Assistant Administrator has further determined that the amendment of the PMP and its implementing regulations do not constitute a major Federal action requiring the preparation of an environmental impact statement under the National Environmental Policy Act of 1969. Further, the amendment does not constitute a significant change to regulations requiring the preparation of a regulatory analysis under Executive Order 12044.

(16 U.S.C. 1801 *et seq.*)

Signed in Washington, D.C., this 25th day of November, 1980.

William H. Stevenson,

Deputy Assistant Administrator for Fisheries, National Marine Fisheries Service.

A. The Preliminary Fishery Management Plan for the Trawl Fisheries and Herring Gillnet Fishery of the Eastern Bering Sea and Northeast Pacific is amended as follows: 1. Section 4.0, Table 18. Make the following changes:

a. Yellowfin sole TALFF from 101,286 mt to 84,950; DAH from 9,864 to26,200; JVP from 8,664 to 25,000.

b. Other flounder TALFF from 56,650 to 53,750; DAH from 1,300 to 4,200; JVP from 100 to 3,000.

c. Pacific cod reserve to 14,935; TALFF to 31,500.

d. "1980 OY" to "OY".

§ 611.20; Appendix 1.4 [Amended]

B. 50 CFR 611.20, Appendix 1.4. Alaska Fisheries, A. Bering Sea and Aleutian Islands Groundfish Fishery is proposed to be amended as follows:

a. Yellowfin sole DAH from 9,864 to 26,200; JVP from 8,664 to 25,000; TALFF from 101,286 to 84,950.

b. Other flounder DAH from 1,300 to 4,200; JVP from 100 to 3,000; TALFF from 56,650 to 53,750.

c. Pacific cod figures: OY—70,700 mt; DAH—24,265 mt; JVP—17,065 mt; DAP—7,200 mt; Reserve—14,935 mt; TALFF—31,500 mt.

[FR Doc. 80-38342 Filed 11-26-80; 10:55 am]
BILLING CODE 3510-22-M

Notices

Federal Register
Vol. 45, No. 231
Friday, November 28, 1980

This section of the FEDERAL REGISTER contains documents other than rules or proposed rules that are applicable to the public. Notices of hearings and investigations, committee meetings, agency decisions and rulings, delegations of authority, filing of petitions and applications and agency statements of organization and functions are examples of documents appearing in this section.

ADMINISTRATIVE CONFERENCE OF THE UNITED STATES

Committee on Informal Action; Meeting

Pursuant to the Federal Advisory Committee Act (Pub. L. 92–463), notice is hereby given of a meeting of the Committee on Informal Action of the Administrative Conference of the United States, to be held at 10:00 a.m., Thursday, December 11, 1980 in the library of the Administrative Conference, Suite 500, 2120 L Street, N.W., Washington, D.C.

The Committee will meet to discuss two pending projects, Professor Colin Diver's study of agency articulation of policy and William Fox's study of techniques of avoiding or narrowing formal hearings in agency licensing proceedings.

Attendance is open to the interested public, but limited to the space available. Persons wishing to attend should notify the Office of the Chairman of the Administrative Conference at least two days in advance. The Committee Chairman, if he deems it appropriate, may permit members of the public to present oral statements at the meeting; any member of the public may file a written statement with the Committee before, during or after the meeting.

For further information concerning this meeting, contact Jeffrey Lubbers (202–254–7065). Minutes of the meeting will be available on request.

Richard K. Berg,
Executive Secretary.
November 24, 1980.
[FR Doc. 80-37094 Filed 11-26-80; 8:45 am]
BILLING CODE 6110-01-M

Committee on Licenses and Authorizations; Meeting

Pursuant to the Federal Advisory Committee Act (Pub. L. 92–463), notice is hereby given of a meeting of the Committee on Licenses and Authorizations of the Administrative Conference of the United States, to be held at 9:30 a.m., Thursday, December 11, 1980 at the office of O'Melveny & Myers, 1800 M Street NW., Suite 500 South, Washington, D.C.

The Committee will meet to discuss Professor Richard Merrill's study of regulation of carcinogens.

Attendance is open to the interested public, but limited to the space available. Persons wishing to attend should notify the Office of the Chairman of the Administrative Conference at least two days in advance. The Committee Chairman, if he deems it appropriate, may permit members of the public to present oral statements at the meeting; any member of the public may file a written statement with the Committee before, during or after the meeting.

For futher information concerning this meeting contact David M. Pritzker (202–254–7065). Minutes of the meeting will be available on request.

Richard K. Berg,
Executive Secretary.
November 24, 1980.
[FR Doc. 80-37093 Filed 11-26-80; 8:45 am]
BILLING CODE 6110-01-M

Public Meeting of Assembly

Notice is hereby given, pursuant to the Federal Advisory Committee Act, Pub. L. 92–463, that the membership of the Administrative Conference of the United States, which makes recommendations to administrative agencies, to the President, Congress, and the Judicial Conference of the United States regarding the efficiency, adequacy, and fairness of the administrative procedures used by administrative agencies in carrying out their programs, will meet in Plenary Session on Thursday, December 11, 1980 at 1:30 p.m. and on Friday, December 12, 1980 at 9:30 a.m. in The Amphitheater of the Federal Home Loan Bank Board, 1700 G Street NW., Washington, D.C.

The Conference will consider proposed recommendations on the following matters:

1. Intragovernmental Communications in Informal Rulemaking.
2. Separation of Functions and Staff Communications with Decisionmakers in Agency Proceedings.
3. The "Race to the Courthouse" in Appeals from Agency Action.

In addition, the Conference will consider a proposed amendment to the Conference Bylaws to revise the list of standing committees.

Plenary sessions are open to the public. Further information on the meeting, including copies of proposed recommendations, may be obtained from the Office of the Chairman, 2120 L Street NW., Suite 500, Washington, D.C. 20037, telephone (202) 254–7020.

Dated: November 24, 1980.

Richard K. Berg,
Executive Secretary.
[FR Doc. 80-37092 Filed 11-26-80; 8:45 am]
BILLING CODE 6110-01-M

DEPARTMENT OF AGRICULTURE

Commodity Credit Corporation

Wool and Mohair Payment Programs; Determination of the Support Prices for Wool and Mohair for the 1981 Marketing Year

AGENCY: Commodity Credit Corporation, USDA.

ACTION: Notice of determination.

SUMMARY: This is a notice of the determination of the Secretary of Agriculture, in accordance with the provisions of the National Wool Act of 1954, as amended, of the support prices for wool and mohair under Commodity Credit Corporation's Wool and Mohair Payment Programs for the 1981 Marketing Year. The Payment Programs are intended to encourage the continued domestic production of wool and mohair at prices fair to both producers and consumers.

EFFECTIVE DATE: November 28, 1980.

ADDRESS: Emergency and Indemnity Programs Division, ASCS, U.S. Department of Agriculture, Room 4095 South Building, Washington, D.C. 20013.

FOR FURTHER INFORMATION CONTACT: Gerald Schiermeyer 202–447–4428. A Final Impact Statement has been prepared and is available from Emergency and Indemnity Programs Division, ASCS, USDA, Room 4095 South Building, Washington, D.C. 20013.

SUPPLEMENTARY INFORMATION: This determination has been reviewed under the USDA criteria established to

implement Executive Order 12044, and has been classified "not significant".

In compliance with Secretary's Memorandum No. 1955 and "Improving USDA Regulations" (43 FR 50988), initiation of review of this determination contained in 7 CFR 1446.38–40 for need, currency clarity and effectiveness will be made within the next five years.

The title and number of the Federal assistance program that this determination applies to is: Title—National Wool Act Payments; NUMBER—10.059 as found in the Catalog of Federal Domestic Assistance Programs.

This action will not have a significant impact on area and community development. Therefore, review as established by OMB Circular A–95, was not used to assure that units of local government are informed of this action.

The National Wool Act of 1954, as amended ("Wool Act"), provides that the Secretary of Agriculture shall support the prices of wool and mohair to producers by means of loans, purchases, payments or other operations. If payments are utilized as a means of price support, the payments shall be as the Secretary of Agriculture determines to be sufficient, when added to the national average return for the commodity equal to the support price level. However, the total payments cannot exceed an amount equal to 70 percent of the accumulated totals as of the same date of the gross receipts from duties collected on or after January 1, 1953, on all articles subject to duty under schedule 11 of the Tariff Act of 1930, as amended.

The Wool Act establishes the price support level for shorn wool for the marketing years 1977 through 1981 at 85 percent of an amount determined by multiplying 62 cents (the support price in 1965) by the ratio of (1) the average parity index (the index of prices paid by farmers, including commodities and services, interest, taxes, and farm wage rates) for the three calendar years immediately preceding the year in which such support price is being determined and announced to (2) the average parity index for the three calendar years 1958, 1959, and 1960, and rounding the resulting amount to the nearest full cent.

The Wool Act also provides that the support prices for pulled wool and for mohair shall be established at such levels, in relationship to the support price for shorn wool, as the Secretary of Agriculture determines will maintain normal marketing practices for pulled wool and as the Secretary shall determine is necessary to maintain approximately the same percentage of parity for mohair as for shorn wool. Further, the support price for mohair must be within a range of 15 percent above or below the comparable percentage of parity at which shorn wool is supported.

The regulations for the wool and mohair payment programs for the 1981 marketing year are published in 7 CFR Parts 1472 and 1468, respectively.

The Wool Act and the applicable regulations provide that the Secretary shall establish and announce, to the extent practicable, support price levels for wool and mohair sufficiently in advance of each marketing year as will permit producers to plan their production for such marketing year. Since these determinations as to the support prices for wool and mohair are mathematical calculations as specified by section 703 of the Wool Act, it is hereby found and determined that compliance with notice and public procedure requirements of Executive Order 12044 and 5 U.S.C. 553 are impracticable and contrary to the public interest. Thus, this notice of determination shall become effective upon date of filing with the Director, Office of the Federal Register.

Determination

Accordingly, pursuant to the authority conferred by section 703 of the National Wool Act of 1954, as amended ("Wool Act"), it is hereby determined that the support prices for shorn wool and mohair for the 1981 marketing year are $1.35 and $3.718 per pound, respectively. The support price for shorn wool, which is equal to 72.2 percent of the October 1980 parity price for wool, has been calculated in accordance with the formula contained in the Wool Act. The support price for mohair, which is 72.2 percent of the October 1980 parity for mohair, has been established at a level, in relationship to the support price for shorn wool, as determined to be necessary to maintain approximately the same percentage of parity for mohair as for shorn wool. The support level for pulled wool will be determined after the National average market price of shorn wool for the 1981 marketing year is announced.

Signed at Washington, D.C. on November 21, 1980.

Bob Bergland,

Secretary of Agriculture.

[FR Doc. 80-37000 Filed 11-26-80; 8:45 am]

BILLING CODE 3410-05-M

Food Safety and Quality Service

Labeling Procedures Notification

AGENCY: Food Safety and Quality Service, USDA.

ACTION: Notice.

SUMMARY: This document announces new procedures established by the Meat and Poultry Standards and Labeling Division (MPSLD), Compliance Program, Food Safety and Quality Service (FSQS), to advise the public more fully of the conduct of its prior approval program for labels and other labeling for federally inspected meat and poultry products. This program provides procedural and substantive requirements for the labeling of products. Under these newly established procedures, MPSLD, FSQS, will attempt to more fully inform consumers, industry, and other interested parties of certain applications and interpretations made by the MPSLD and advise the public of the availability of certain documents.

EFFECTIVE DATE: December 29, 1980.

FOR FURTHER INFORMATION CONTACT: Mr. Robert G. Hibbert, Director, Meat and Poultry Standards and Labeling Division, Compliance Program, Food Safety and Quality Service, U.S. Department of Agriculture, Washington, D.C. 20250, (202) 447–6042.

SUPPLEMENTARY INFORMATION: Pursuant to the authority contained in the Federal Meat Inspection Act (21 U.S.C. 601 *et seq.*) and the regulations promulgated thereunder (9 CFR 301.1 *et seq.*) and the Poultry Products Inspection Act (21 U.S.C. 451 *et seq.*) and the regulations promulgated thereunder (9 CFR 381.1 *et seq.*), FSQS must assure that the Nation's supply of meat and poultry products is wholesome, not adulterated, and properly labeled, marked, and packaged. In order to assure that meat and poultry products are not misbranded, within the meaning of section (n), of the Federal Meat Inspection Act (21 U.S.C. 601(n) and section 4(h) of the Poultry Products Inspection Act (21 U.S.C. 453(h)), FSQS conducts a prior approval program for labels or other labeling (specified in 9 CFR 317.4, 317.5, 381.132, and 381.134) to be used on federally inspected meat and poultry products. Pursuant to the Federal Meat Inspection Act and the Poultry Products Inspection Act and the regulations promulgated thereunder, meat and poultry products which do not bear approved labels may not be distributed in commerce.

Applications for sketch or final approval of these labels or other labeling are filed with FSQS by meat and poultry packers or processors or

their representatives. Through this procedure, applicants must submit detailed processsing information, including product formula and other information requested by the Agency. This information is reviewed by an FSQS label review expert prior to an approval of the label or other labeling. Modifications of any previously approved label or other labeling are reviewed and approved generally in the same manner.

The maintenance and operation of such a system is a difficult task. In fiscal year 1980, FSQS reviewed and approved over 100,000 meat and poultry products labels. A variety of factors, such as continuing technological innovations in food processing and expanded public concern regarding the presence of various substances in foods which may affect the safety of their consumption, has generated a series of increasingly complex issues which FSQS must resolve as part of this prior approval process. The packer or processor, on the other hand, understandably focuses upon the role of the label and other labeling as marketing tools and is, therefore, interested in making claims and statements which are designed to encourage the product's sale and to enhance the product's appearance to consumers. This inevitably leads to difficult questions for FSQS in evaluating, on an individual basis, what types of labels or other labeling will not be false or misleading or otherwise render the product misbranded within the meaning of the Federal Meat Inspection Act or the Poultry Products Inspection Act.

The Federal meat and poultry products inspection regulations establish procedures, provide substantive labeling requirements, specify definitions and standards of identity or composition for certain products, and provide specific information regarding permitted and nonpermitted uses of various substances. A substantial percentage of labeling applications are routinely approved or denied through the application of the relevant portions of the Acts and the regulations. Over 50 percent of all label approval submissions are currently reviewed within 2 working days of receipt and 98 percent within 2 weeks. However, some labeling applications present more difficult questions which require interpretation of the Acts or regulations, and the development of or the modification of the Agency's policy. Depending upon their novelty, complexity, and impact upon the public, such labeling questions are resolved by either the initial reviewing official, supervisory staff personnel, Division Director, Deputy Administrator for Compliance, or Administrator. These determinations are effected through a variety of methods, including internal memoranda, letters, agreements reached by telephone calls, meetings and appeals of the initial determinations. Furthermore, interpretations of the Acts and regulations generally are included in an internal manual known as the Policy Book, copies of which are available to the public.

FSQS has received and considered criticism of some aspects of this system. Industry representatives have contended that FSQS has not established an ongoing system to advise interested parties fully of interpretations made by the MPSLD. Questions may occur when the MPSLD interprets, reinterprets, or modifies labeling determinations and approvals on the ad hoc basis previous described. Some packers and processors have expressed their concern that they may be placed at a competitive disadvantage because they are unaware of an interpretation by the MPSLD on a particular issue and may not be advised of it until their labels or other labeling raise the same question during the review process. Applicants have frequently stated that they are often not as concerned with the substance of the position of the MPSLD on a given issue as they are with the uniform application of such interpretations to avoid placing their products at a potential competitive disadvantage. Similar concerns have also been recently expressed by the Department's Office of the Inspector General (OIG). In its February 10, 1980, audit report, OIG criticized FSQS's traditional practice of recording such determinations through the use of control sheets, bulletins, and other documents not generally made available to the public.

FSQS recognizes the basic validity of some of these concerns. However, in considering these criticisms, FSQS also recognizes that the existing system contemplates rapid decisionmaking on a high volume of applications, and that neither the industry nor any other members of the public would benefit from time consuming procedures which may impede the review process. FSQS remains convinced that its prior approval system provides for effective regulatory control in this area and, therefore, intends to retain the basic features of the present system. However, the system can be modified to maintain its key elements while establishing new procedures that are designed to advise the public of interpretations and determinations made by the MPSLD by means of notification in the Federal Register. Copies of memoranda regarding such interpretations and determinations will be available from MPSLD.

It should be noted that this labeling procedure notification does not alter or affect any appeal rights that an applicant possesses. Appeals will still be afforded only to those using or proposing to use the marking, labeling, or container involved.

Therefore, effective immediately, the MPSLD will follow the procedures outlined below:

1. Significant or novel applications or interpretations of the Federal Meat Inspection Act, the Poultry Products Inspection Act, the regulations promulgated thereunder, or departmental policy will be issued, in writing, in a uniform format which specifies the issue, the MPSLD's application or interpretation, and the basis for MPSLD's decision. The determination whether an application or interpretation is significant or novel, and, therefore, issued in writing is a decision at the discretion of the Director, MPSLD, FSQS. Any application or interpretation specified in the memorandum will remain if effect unless modified or rescinded on appeal or by the Director, MPSLD.

2. Copies of these memoranda will be made available to the public in MPSLD Offices at 300 12th Street, SW., Washington, D.C. 20250.

3. FSQS will periodically publish a notice in the Federal Register listing significant or novel applications or interpretations made by the MPSLD since the previously published notice and advising of the availability of copies of the memoranda.

4. In accordance with the Federal meat inspection regulations (9 CFR 301.1 *et seq.*) and the Federal poultry products inspection regulations (9 CFR 381.1 *et seq.*) an appeal of a decision by the labeling applicant may be made to the immediate supervisor of the FSQS employee making the determination. Also, in accordance with section 7(e) of the Federal Meat Inspection Act (21 U.S.C. 607(e)) and section 8(d) of the Poultry Products Inspection Act (21 U.S.C. 457(d)) and section 335.12 of the Federal meat inspection regulations (9 CFR 335.12) and section 381.233 of the Federal poultry products inspection regulations (9 CFR 381.233), if the Administrator of FSQS has reason to believe that any marking or labeling or the size or form of any container in use or proposed for use is false or misleading in any particular, he may

direct that such use be withheld unless the marking, labeling, or container is modified in such a manner as he may prescribe so that it will not be false or misleading. If the person, firm, or corporation using or proposing to use the marking, labeling, or container does not accept the determination, such person, firm, or corporation may request a hearing and final determination by the Department. Such hearing will be held in accordance with the applicable Rules of Practice, 7 CFR 1.130 *et seq.*

It is important to emphasize that this notice does not establish any substantive changes in the present labeling review or approval process. MPSLD officials will continue to perform the basic tasks of reviewing labels or other labeling, making determinations on specific labeling issues, and developing regulations. The establishment of the procedures outlined above will serve to make certain aspects of the process more accessible and understandable to interested members of the public, and will also assist FSQS in its overall efforts to assure that the Nation's supply of meat and poultry products is not misbranded.

Thomas P. Grumbly,

Associate Administrator, Food Safety and Quality Service.

[FR Doc. 80-37112 Filed 11-26-80; 8:45 am]

BILLING CODE 3410-DM-M

Office of the Secretary

Tongass National Forest; Transfer of Certain Lands

Pursuant to the authority vested in me by the Act of June 30, 1976, Pub. L. 94-323 (90 Stat. 717), the following lands are hereby transferred from the administrative jurisdiction of the Forest Service, United States Department of Agriculture, to the administrative jurisdiction of the National Park Service, United States Department of the Interior.

Those certain lands now administered as a part of the Tongass National Forest and being more particularly described as follows:

Alaska—Copper River Meridian

T. 26S., R. 60E.,
sec. 12, all lands east of White Pass Fork;
sec. 13, all lands east of White Pass Fork;
sec. 14, all lands east of White Pass Fork;
sec. 23, all lands east of White Pass Fork;
sec. 24, NW¼;
sec. 26, W½E½ all lands east of White Pass Fork, E½W½ all lands east of White Pass Fork;
sec. 34, S½S½ all lands south of Skagway River;
sec. 35, W½E½, W½ all lands east and south of Skagway River and White Pass Fork;
T. 26S., R. 61E.,
sec. 18, entire section
T. 27S., R. 60E.,
sec. 3, NW¼ all lands east of Skagway River.

The areas described aggregate 1,690.0 acres, more or less.

Effective Date: This notice takes effect on the date of publication in the Federal Register.

November 24, 1980.

Ned D. Bayley,

Acting Assistant Secretary for Natural Resources and Environment.

[FR Doc. 80-36998 Filed 11-26-80; 8:45 am]

BILLING CODE 3410-11-M

Rural Electrification Administration

Hossier Energy Division, Indiana Statewide Rural Electric Cooperative, Inc. Bloomington, Indiana; Proposed Loan Guarantee

Under the authority of Pub. L. 93-32 (87 Stat. 65) and in conformance with applicable agency policies and procedures as set forth in REA Bulletin 20-22 (Guarantee of Loans for Bulk power Supply Facilities), notice is hereby given that the Administrator of REA will consider (a) providing a guarantee supported by the full faith and credit of the United States of America for a loan in the approximate amount of $160,740,000 to Hoosier Energy Division, Indiana Statewide Rural Electric Cooperative, Inc., Bloomington, Indiana, and (b) supplementing such a loan with an insured REA loan at 5 percent interest in the approximate amount of $6,000,000 to this cooperative. These loan funds will be used to finance 5 new substations and related facilities, 14.5 miles of 69 kV transmission line and related facilites, cost deficiencies on the Merom Generating Station, and new headquarters facilities.

Legally organized lending agencies capable of making, holding and servicing the loan proposed to be guaranteed may obtain information on the proposed program, including the engineering and economic feasibility studies and the proposed schedule for the advances to the borrower of the guaranteed loan funds from Mr. Virgil E. Peterson, Executive Vice-President and General Manager, Hoosier Energy Division, Indiana Statewide Rural Electric Cooperative, Inc., P.O. Box 908, Bloomington, Indiana 47402.

In order to be considered, proposals must be submitted on or before December 29, 1980, to Mr. Peterson. The right is reserved to give such consideration and make such evaluation or other disposition of all proposals received, as Hooster Energy Division and REA deem appropriate. Prospective lenders are advised that the guaranteed financing for this project is available from the Federal Financing Bank under a standing agreement with the Rural Electrification Administration.

Copies of REA Bulletin 20-22 are available from the Director, Office of Information and Public Affairs, Rural Electrification Administration, U.S. Department of Agriculture, Washington, D.C. 20250.

This program is listed in the Catalog of Federal Domestic Assitance as 10.850—Rural Electricfication Loans and Loan Guarantees.

Dated at Washington, D.C. this 18th day of ovember, 1980.

Robert W. Feragen,

Administrator, Rural Electrification Administration.

[FR Doc. 80-36999 Filed 11-26-80; 8:45 am]

BILLING CODE 3410-15-M

CIVIL AERONAUTICS BOARD

[Docket 38865]

Sun Pacific Airlines Fitness Investigation; Hearing

Notice is hereby given that a hearing in the above-entitled matter is assigned to be held on December 11, 1980, at 10:30 a.m. (local time), in Room 1003, Hearing Room A, Universal North Building, 1875 Connecticut Avenue NW., Washington, D.C. before the undersigned.

Dated at Washington, D.C., November 21, 1980.

Joseph J. Saunders,

Chief Administrative Law Judge.

[FR Doc. 80-37077 Filed 11-26-80; 8:45 am]

BILLING CODE 6320-01-M

DEPARTMENT OF COMMERCE

International Trade Administration

Computer Systems Technical Advisory Committee; Partially Closed Meeting

AGENCY: International Trade Administration.

SUMMARY: The Computer Systems Technical Advisory Committee was initially established on January 3, 1973, and rechartered on August 29, 1980 in accordance with the Export Administration Act of 1979 and the Federal Advisory Committee Act.

The Committee advises the Office of Export Administration with respect to questions involving (A) technical specification and policy issues relating to those specifications which are of

concern to the Department, (B) worldwide availability of products and systems, including quantity and quality, and actual utilization of production technology, (C) licensing procedures which affect the level of export controls applicable to computer systems or technology, and (D) exports of the aforementioned commodities subject to unilateral and multilateral controls which the United States establishes or in which it participates including proposed revisions of any such controls.

TIME AND PLACE: December 17, 1980, at 9:30 a.m. The meeting will take place at the Main Commerce Building, Room 3708, 14th Street and Constitution Ave., NW., Washington, D.C.

AGENDA:

General Session

(1) Opening remarks by the Chairman.
(2) Presentation of papers or comments by the public.
(3) Report on the current work program of the subcommittees:
(a) Technology Transfer;
(b) Foreign Availability;
(c) Hardware; and
(d) Licensing Procedures.

Executive Session

(4) Discussion of matters properly classified under Executive Order 11652 or 12065, dealing with the U.S. and COCOM control program and strategic criteria related thereto.

PUBLIC PARTICIPATION: The General Session of the meeting will be open to the public and a limited number of seats will be available. To the extent time permits members of the public may present oral statements to the Committee. Written statements may be submitted at any time before or after the meeting.

SUPPLEMENTARY INFORMATION: The Assistant Secretary for Administration, with the concurrence of the delegate of the General Counsel, formally determined on September 16, 1980, pursuant to Section 10(d) of the Federal Advisory Committee Act, as amended by Section 5(c) of the Government In The Sunshine Act, Pub. L. 94–409, that the matters to be discussed in the Executive Session should be exempt from the provisions of the Federal Advisory Committee Act relating to open meetings and public participation therein, because the Executive Session will be concerned with matters listed in 5 U.S.C. 552b(c)(1) and are properly classified under Executive Order 11652 or 12065.

A copy of the Notice of Determination to close meetings or portions thereof is available for public inspection and copying in the Central Reference and Records Inspection Facility, Room 5317, U.S. Department of Commerce, Telephone: 202–377–4217.

FOR FURTHER INFORMATION OR COPIES OF THE MINUTES CONTACT: Mrs. Margaret A. Cornejo, Office of the Director of Licensing, Office of Export Administration, Room 1609, U.S. Department of Commerce, Washington, D.C. 20230, Telephone: 202–377–2583.

Dated: November 21, 1980.

Saul Padwo,,

Director of Licensing, Office of Export Administration.

[FR Doc. 80-36966 Filed 11-26-80; 8:45 am]

BILLING CODE 3510-25-M

Hardware Subcommittee of the Computer Systems Technical Advisory Committee; Closed Meeting

AGENCY: International Trade Administration.

SUMMARY: The Computer Systems Technical Advisory Committee was initially established on January 3, 1973, and rechartered on August 29, 1980 in accordance with the Export Administration Act of 1979 and the Federal Advisory Committee Act. The Subcommittee was approved for continuation on September 19, 1980 pursuant to the charter of the Committee.

The Hardware Subcommittee was formed to continue the work of the Performance Characteristics and Performance Measurements Subcommittee, pertaining to (1) maintenance of the processor performance tables and further investigation of total systems performance; and (2) investigation of array processors in terms of establishing the significance of these devices and determining the differences in characteristics of various types of these devices.

TIME AND PLACE: December 16, 1980, at 9:30 a.m. The meeting will take place at the Main Commerce Building, Room 3708, 14th Street and Constitution Avenue, N.W., Washington, D.C. The Subcommittee will meet only in Executive Session to discuss matters properly classified under Executive Order 11652 or 12065, dealing with the U.S. and COCOM control program and strategic criteria related thereto.

FOR FURTHER INFORMATION CONTACT: Mrs. Margaret A. Cornejo, Office of the Director of Licensing, Office of Export Administration, Room 1609, U.S. Department of Commerce, Washington, D.C. 20230. Telephone: 202–377–2583.

SUPPLEMENTARY INFORMATION: The Assistant Secretary for Administration, with the concurrence of the delegate of the General Counsel, formally determined on September 16, 1980, pursuant to Section 10(d) of the Federal Advisory Committee Act, as amended by Section 5(c) of the Government in the Sunshine Act, P.L. 94–409, that the matters to be discussed in the Executive Session should be exempt from the provisions of the Federal Advisory Committee Act relating to open meetings and public participation therein, because the Executive Session will be concerned with matters listed in 5 U.S.C. 552b(c)(1) and are properly classified under Executive Order 11652 or 12065.

A copy of the Notice of Determination to closed meetings or portions thereof is available for public inspection and copying in the Central Reference and Records Inspection Facility, Room 5317, U.S. Department of Commerce, Telephone: 202–377–4217.

Dated: November 21, 1980.

Saul Padwo,

Director of Licensing, Office of Export Administration.

[FR Doc. 80-36967 Filed 11-26-80; 8:45 am]

BILLING CODE 3510-25-M

National Technical Information Service

Government-Owned Inventions; Availability for Licensing

The inventions listed below are owned by the U.S. Government and are available for domestic and, possibly, foreign licensing in accordance with the licensing policies of the agency of the agency-sponsors.

Copies of patents cited are available from the Commissioner of Patents & Trademarks, Washington, D.C. 20231, for $.50 each. Requests for copies of patents must include the patent number.

Copies of patent applications cited are available from the National Technical Information Servce (NTIS), Springfield, Virginia 22161 for $5.00 each ($10.00 outside North American Continent). Requests for copies of patent applications must include the PAT-APPL number. Claims are deleted from patent application copies sold to avoid premature disclosure. Claims and other technical data will usually be made available to serious prospective licensees upon execution of a non-disclosure agreement.

Requests for information on the licensing of particular inventions should

be directed to the addresses cited for the agency-sponsors.

Douglas J. Campion,

Program Coordinator, Office of Government Inventions and Patents, National Technical Information Service, U.S. Department of Commerce.

U.S. Department of Energy, Assist. Gen. Couns. for Patents, Washington, D.C. 20545

Patent application 6,003,559: Apparatus for Checking the Direction of Polarization of Shear-Wave Ultrasonic Transducers; filed January 15, 1979

Patent application 6,003,840: Material for Radioactive Protection; filed January 16, 1979

Patent application 6,009,623: Perfluorocarbon Vapor Tagging of Blasting Cap Detonators; filed February 6, 1979

Patent application 6,019,808: Ductile Alloy and Process for Preparing Composite Superconducting Wire; filed March 12, 1979

Patent application 6,022,898: Apparatus for Correcting Precision Errors in Slide Straightness in Machine Tools; filed March 22, 1979

Patent application 6,024,339: Salt-Soda Sinter Process for Recovering Aluminum from Fly Ash; filed March 27, 1979

Patent application 6,026,508: Terpolymerization of Ethylene, Sulfur Dioxide and Carbon Monoxide; filed April 3, 1979

Patent application 6,031,810: Miniature Quartz Resonator Force Transducer; filed April 20, 1979

Patent application 6,036,257: Glove Box Shield; filed May 4, 1979

Patent application 6,043,855: Method of Handling Radioactive Alkali Metal Waste; filed May 30, 1980

Patent application 6,050,860: Isotropically Sensitive Optical Filter Employing Atomic Resonance Transitions; filed June 21, 1979

Patent application 6,058,420: Electric Controlled Air Incinerator for Radioactive Wastes; filed July 18, 1979

Patent application 6,062,373: Hydrogen Production by the Decomposition of Water; filed July 31, 1979

Patent application 6,078,759: Cadmium Telluride Photovoltaic radiation Detector; filed September 25, 1979

Patent application 4,168,191: Thermally Stable, Plastic-Bonded Explosives; filed June 29, 1978; patented September 18, 1979; not available NTIS

Patent application 4,172,391: Drill Drive Mechanism; filed September 9, 1977; patented October 30, 1979; not available NTIS

Patent application 4,183,055: Beam/Seam Alignment Control for Electron Beam Welding; filed August 24, 1978; patented January 8, 1980; not available NTIS

U.S. Department of the Interior, Branch of Patents, 18th and C Streets N.W., Washington, DC 20240

Patent application 6,114,522: Metal Hydride Actuation Device; filed January 23, 1980

U.S. Department of the Navy, Assistant Chief for Patents, Office of Naval Research, Code 302, Arlington, VA 22217

Patent 4,124,976: Method for Reducing the Critical Injection Parametric in a Solid Fuel Ramjet, filed July 5, 1977; not available NTIS

Patent 4,125,728: Method for Preparing 2,3,7,8-Tetraazaspiro(4,4)Nona-2,7-Diene; filed September 1, 1977; patented November 14, 1978; not available NTIS

Patent 4,131,793: Lateral Photodetectors; filed August 10, 1976; patented December 26, 1978; not available NTIS

Patent 4,179,219: Revolving Mirror Scanning Interferometer; filed April 10, 1978; patented December 18, 1979; not available NTIS

Patent 4,184,767: Frequency Agile Optical Radar; filed July 21, 1975; patented January 22, 1980; not available NTIS

Patent 4,187,556: Electo-Acoustic Transducer with Line Focus; filed April 5, 1960; patented February 5, 1980; not available NTIS

Patent 4,188,886: Pressure Probe for Safety-Arming Device; filed May 26, 1978; patented February 19, 1980; not available NTIS

Patent 4,189,026: Underwater Generation of Low Frequency Sound; filed June 13, 1954; patented February 19, 1980; not available NTIS

Patent 4,189,122: Wide Angle Gimbal System; filed July 21, 1978; patented February 19, 1980; not available NTIS

Patent 4,190,704: Protected Calcium Anode; filed February 5, 1979; patented February 26, 1980; not available NTIS

Patent 4,191,461: Camera Jig for Underwater Stereoscopic Photography; filed May 16, 1979; patented March 4, 1980; not available NTIS

Patent 4,198,634: Optical Autocorrelator Signal Processor; filed September 30, 1971; patented April 15, 1980; not available NTIS

Patent 4,200,859: Device for Simulating Marine Craft Noises; filed April 21, 1946; patented April 29, 1980; not available NTIS

Patent 4,200,920: Artificial Underwater Target; filed February 29, 1956; patented April 29, 1980; not available NTIS

Patent 4,201,988: Wideband VHF Antenna; filed March 5, 1979; patented May 6, 1980; not available NTIS

Patent 4,203,108: Underwater Detection System; filed August 18, 1961; patented May 13, 1980; not available NTIS

Patent 4,203,164: Secure Sonar Communication System; filed March 6, 1961; patented May 13, 1980; not available NTIS

Patent 4,204,280: Underwater Signal Discrimination System; filed November 21, 1962; patented May 20, 1980; not available NTIS

Patent 4,205,235: Automatic Electrical Load Matching Device for Wind Generators; filed March 6, 1978; patented May 27, 1980; not available NTIS

Patent 4,205,394: Sealed Cavity Hydrophone Array Calibration; filed November 3, 1978; patented May 27, 1980; not available NTIS

Patent 4,206,746: Spiral-Passage Heat Exchanger; filed March 10, 1978; patented June 10, 1980; not available NTIS

Patent 4,207,625: Doppler Compensator for Heterodyne Correlation Devices; filed March 6, 1961; patented June 10, 1980; not available NTIS

[FR Doc. 80-36960 Filed 11-26-80; 8:45 am]
BILLING CODE 3510-04-M

Minority Business Development Agency

Financial Assistance Application Announcement

The Minority Business Development Agency, San Francisco Region, announces a change in the closing date of four projects. The four Project I.D. Nos. are: 09-10-50610-00, 09-10-50620-00, 09-10-50630-00, and 09-10-50640-00. Announcement of these projects appeared in the Federal Register on November 17, 1980, Volume 45, No. 223. The new closing date for these four projects is December 29, 1980.

Dated: November 21, 1980.

R. V. Romero,

Regional Director.

[FR Doc. 80-37030 Filed 11-26-80; 8:45 am]
BILLING CODE 3510-21-M

Financial Assistance Application Announcement

The Minority Business Development Agency announces that it is seeking applications under its program to operate four San Francisco Region projects for a twelve month period beginning April 1, 1981. The aggregate total cost of the projects is $1,314,000.

Funding Instrument: It is anticipated that the funding instruments, as defined by the Federal Grant and Cooperative Agreements Act of 1977, will be grants.

Program Description: The General Business Services Program (GBS) of the Minority Business Development Agency (MBDA) provides technical assistance to minority businesspersons and firms for the purpose of improving their stability by increasing their management and marketing capabilities. MBDA offers competitive grants to consulting firms (either non-profit or commercial entities). These firms must be capable of providing such services as:

—Preparation of business plans;
—Financial packaging;
—Industrial management assistance;
—Personnel management services;
—Marketing planning;

and a broad range of other business services excluding legal services.

Applications are invited for the following four projects:

1. One grant for a management and technical assistance project to operate in the Fresno and Bakersfield SMSAs in Fresno and Kern counties of California.

The Project will operate at a cost not to exceed $299,000. The Project I.D. Number is 09–10–50650–00.

2. One grant for a management and technical assistance project to operate in the Phoenix and Tucson SMSAs in Maricopa and Pima counties of Arizona. The Project will operate at a cost not to exceed $269,000. The Project I.D. Number is 09–10–50560–00.

3. One grant for a management and technical assistance project to operate in the San Diego SMSA in San Diego county of California. The Project will operate at a cost not to exceed $301,000. The Project I.D. Number is 09–10–50570–00.

4. One grant for a management and technical assistance project to operate in the San Jose and Salinas-Seaside-Monterey SMSAs in Santa Clara and Monterey counties of California. The project will operate at a cost not to exceed $445,000. The Project I.D. Number is 09–10–50680–00.

Eligibility Requirements: There are no restrictions. Any profit or non-profit institution is eligible to submit an application.

Application Materials: An application kit for these projects may be requested by writing the following address:

U.S. Department of Commerce, Minority Business Development Agency, Grants Administration Unit, 450 Golden Gate Avenue, Box 36014, San Francisco, California 94102.

In requesting an application kit, the applicant must specify its profit status; i.e., State or local government, Federally recognized Indian tribal units, educational institutions, hospitals, or other type of profit or non-profit institution. This information is necessary to enable MBDA to include the appropriate cost principles in the application kit.

Award Process: All applications that are submitted in accordance with the instructions in the application kit will be submitted to a panel for review and ranking. Specific criteria by which applications will be evaluated is included in the application kit.

Closing Date: Applicants are encouraged to obtain an application kit as soon as possible in order to allow sufficient time to prepare and submit an application before the closing date of January 15, 1981. Applications received after January 9, 1981 will not be considered.

11.800 Minority Business Development, (Catalog of Federal Domestic Assistance) (This program is not subject to the requirements of OMB Circular A-95).

Date: November 21, 1980.

R. V. Romero,

Regional Director.

[FR Doc. 80-37031 Filed 11-26-80; 8:45 am]

BILLING CODE 3510-21-M

COMMITTEE FOR THE IMPLEMENTATION OF TEXTILE AGREEMENTS

Announcing Additional Import Controls on Certain Cotton Textile Products from the Republic of Korea

November 21, 1980.

AGENCY: Committee for the Implementation of Textile Agreements.

ACTION: Controlling cotton knit shirts and blouses in Category 338/339 during the twelve-month period which began on January 1, 1980.

(A detailed description of the textile categories in terms of T.S.U.S.A. numbers was published in the Federal Register on February 28, 1980 (45 FR 13172), as amended on April 23, 1980 (45 FR 27463), and August 12, 1980 (45 FR 53506)).

SUMMARY: Under the terms of the Bilateral Cotton, Wool and Man-Made Fiber Textile Agreement of December 23, 1977, as amended, between the Governments of the United States and the Republic of Korea, the United States Government has decided to control imports of cotton textile products in Category 338/339, produced or manufactured in the Republic of Korea and exported to the United States during the twelve-month period which began on January 1, 1980, in addition to those categories previously designated. The level will be 473,333 dozen.

EFFECTIVE DATE: December 1, 1980.

FOR FURTHER INFORMATION CONTACT: William Boyd, International Trade Specialist, Office of Textiles and Apparel, U.S. Department of Commerce, Washington, D.C. 20230 (202/377–5423).

SUPPLEMENTARY INFORMATION: On December 27, 1979, there was published in the Federal Register (45 FR 76573) a letter dated December 20, 1979 from the Chairman of the Committee for the Implementation of Textile Agreements to the Commissioner of Customs which established levels of restraint for certain specified categories of cotton, wool and man-made fiber textile products, produced or manufactured in the Republic of Korea, which may be entered into the United States for consumption, or withdrawn from warehouse for consumption, during the twelve-month period which began on January 1, 1980 and extends through December 31, 1980. In accordance with the terms of the bilateral agreement, the United States Government has decided also to control imports of cotton textile products in Category 338/339, produced or manufactured in the Republic of Korea and exported to the United States during the twelve-month period which began on January 1, 1980. Accordingly, in the letter published below, the Chairman of the Committee for the Implementation of Textile Agreements directs the Commissioner of Customs to prohibit entry for consumption of withdrawal from warehouse for consumption of cotton textile products in Category 338/339 in excess of the designated level or restraint. The level of restraint has not been adjusted to account for any imports after December 31, 1979. Imports in Category 338/339 during the period which began on January 1, 1980 and extended through September 30, 1980 amounted to 354,299 dozen of which 162,128 dozen will be charged to Category 338 and 192,171 dozen will be charged to Category 339. As the data becomes available, further charges will be made to account for imports during the period which began on October 1, 1980 and extends to the effective date of this action.

Arthur Garel,

Acting Chairperson, Committee for the Implementation of Textile Agreements.

November 21, 1980.

Committee for the Implementation of Textile Agreements

Commissioner of Customs,
Department of the Treasury Washington, D.C.

Dear Mr. Commissioner: This directive further amends, but does not cancel, the directive issued to you on December 20, 1979 by the Chairman, Committee for the Implementation of Textile Agreements, concerning imports into the United States of certain cotton, wool and man-made fiber textile products, produced or manufactured in the Republic of Korea.

Under the terms of the Arrangement Regarding International Trade in Textiles done at Geneva on December 20, 1973, as extended on December 15, 1977; pursuant to the Bilateral Cotton, Wool and Man-Made Textile Agreement of December 23, 1977, as amended, between the Governments of the United States and the Republic of Korea; and in accordance with the provisions of Executive Order 11651 of March 3, 1972, as amended by Executive Order 11951 of January 6, 1977, you are directed to prohibit, effective on December 1, 1980 and for the twelve-month period beginning on January 1, 1980 and extending through December 31, 1980, entry into the United States for consumption and withdrawal from warehouse for consumption of cotton textile products in Category 338/339, produced or manufactured in the Republic of Korea, in excess of the following level of restraint:

Category	12-mo level of restraint [1]
338/339	473,333

[1] The level of restraint for Category 338/339 has not been adjusted to reflect any imports after December 31, 1979. Imports in the Category during the January-September 1980 period have amounted to 354,299 dozen of which 162,128 dozen should be charged to Category 338 and 192,171 dozen should be charged to Category 339.

Cotton textile products in Category 338/339 which have been exported to the United States prior to January 1, 1980 shall not be subject to this directive.

Cotton textile products in Category 338/339 which have been released from the custody of the U.S. Customs Service under the provisions of 19 U.S.C. 1448(b) or 1484(a)(1)(A) prior to the effective date of this directive shall not be denied entry under this directive.

A detailed description of the textile categories in terms of T.S.U.S.A. numbers was published in the Federal Register on February 28, 1980 (45 FR 13172), as amended on April 23, 1980 (45 FR 27463), and August 12, 1980 (45 FR 53506)).

In carrying out the above directions, the Commissioner of Customs should construe entry into the United States for consumption to include entry for consumption into the Commonwealth of Puerto Rico.

The actions taken with respect to the Government of the Republic of Korea and with respect to imports of man-made fiber textile products from the Republic of Korea have been determined by the Committee for the Implementation of Textile Agreements to involve foreign affairs functions of the United States. Therefore, these directions to the Commissioner of Customs, which are necessary for the implementation of such actions, fall within the foreign affairs exception to the rule-making provisions of 5 U.S.C. 553. This letter will be published in the Federal Register.

Sincerely,

Arthur Garel,

Acting Chairperson, Committee for the Implementation of Textile Agreements.

[FR Doc. 80-37045 Filed 11-26-80; 8:45 am]

BILLING CODE 3510-25-M

Adjusting the Import Levels for Certain Man-Made Fiber Textile Products From Taiwan

November 21, 1980.

AGENCY: Committee for the implementation of Textile Agreements.

ACTION: Increasing to 1,727,489 dozen the import level established for men's and boys' man-made fiber knit shirts in Category 638 produced or manufactured in Taiwan and exported during the twelve-month period which began on January 1, 1980, and reducing the level for woman's, girls' and infants' man-made fiber knit shirts and blouses in Category 639, to 5,024,887 dozen during the same twelve-month period. (A detailed description of the textile categories in terms of T.S.U.S.A. numbers was published in the Federal Register on February 28, 1980 (45 FR 13172), as amended on April 23, 1980 (45 FR 27463), and August 12, 1980 (45 FR 53506).

SUMMARY: The bilateral agreement of June 8, 1978, as amended, concerning cotton, wool and man-made fiber textile products exported from Taiwan provides for the shifting of yardage out of Category 639 and into Category 638. Pursuant to the terms of the amended bilateral agreement, the import levels for Categories 638 and 639 are being adjusted for the twelve-month period which began on January 1, 1980 and extends through December 31, 1980.

EFFECTIVE DATE: November 24, 1980.

FOR FURTHER INFORMATION CONTACT: Ronald J. Sorini, International Trade Specialist, Office of Textiles and Apparel, U.S Department of Commerce, Washington, D.C. 20230 (202/377-5423).

SUPPLEMENTARY INFORMATION: On December 28, 1979, there was published in the Federal Register (45 FR 76829) a letter dated December 21, 1979 from the Chairman of the Committee for the Implementation of Textile Agreements to the Commissioner of Customs, which established levels of restraint for certain specified categories of cotton, wool and man-made fiber textile products, including Categories 638 and 639, produced or manufactured in Taiwan, which may be entered into the United States for consumption, or withdrawn from warehouse for consumption, during the twelve-month period which began on January 1, 1980 and extends through December 31, 1980. In the letter published below, the Chairman of the Committee for the Implementation of Textile Agreements directs the Commissioner of Customs to adjust the levels of restraint established for man-made fiber textile products in Categories 638 and 639.

Arthur Garel,

Acting Chairperson, Committee for the Implementation of Textile Agreements.

November 21, 1980.

Commissioner of Customs, Department of the Treasury,
Washington, D.C.

Dear Mr. Commissioner: This directive further amends, but does not cancel, the directive of December 21, 1979, which directed you to prohibit entry of cotton, wool and man-made fiber textile products in certain specified categories, produced or manufactured in Taiwan and exported during the twelve month period which began on January 1, 1980.

Under the terms of the Arrangement Regarding International Trade in Textiles done at Geneva on December 20, 1973, as extended on December 15, 1977; pursuant to the Bilateral Cotton, Wool and Man-Made Fiber Textile Agreement of June 8, 1978, as amended, concerning cotton, wool and man-made fiber textile products exported from Taiwan; and in accordance with the provisions of Executive Order 11651 of March 3, 1972, as amended by Executive Order 11951 of January 6, 1977, you are directed to amend, effective on November 24, 1980, the levels of restraint established for Categories 638 and 639 to the following:

Category	Amended 12-mo. level of restraint [2] (doz.)
638	1,727,489
639	5,024,887

[2] The levels of restraint have not been adjusted to reflect any imports after December 31, 1979.

The actions taken with respect to the authorities in Taiwan, and with respect to imports of man-made fiber textile products from Taiwan have been determined by the Committee for the Implementation of Textile Agreements to involve foreign affairs functions of the United States. Therefore, these directions to the Commissioner of Customs, which are necessary to the implementation of such actions, fall within the foreign affairs exception to the rule-making provisions of 5 U.S.C. 553. This letter will be published in the Federal Register.

Sincerely,

Arthur Garel,

Acting Chairperson, Committee for the Implementation of Textile Agreements.

[FR Doc. 80-37044 Filed 11-26-80; 8:45 am]

BILLING CODE 3510-25-M

Announcing an Import Restraint Level for Certain Man-Made Fiber Textile Products From Costa Rica, Effective January 1, 1981

November 21, 1980.

AGENCY: Committee for the Implementation of Textile Agreements.

ACTION: Established an import restraint level for man-made fiber brassieres in Category 649, produced or manufactured in Costa Rica and exported to the United States during the twelve-month period beginning on January 1, 1981. (A detailed description of the textile categories in terms of T.S.U.S.A. numbers was published in the Federal Register on February 28, 1980 (45 FR 13172), as amended on April 23, 1980 (45 FR 27463), and August 12, 1980 (45 FR 53506)).

SUMMARY: On September 22, 1980, the Governments of the United States and Costa Rica exchanged diplomatic notes

establishing a cotton, wool and man-made fiber textile agreement beginning on January 1, 1980 and extending for four years through December 31, 1983. The agreement establishes a specific level of restraint for man-made fiber textile products in Category 649 during the agreement year beginning on January 1, 1981 and extending through December 31, 1981. In the letter published below the Chairman of the Committee for the Implementation of Textile Agreements directs the Commissioner of Customs, in accordance with the terms of the bilateral agreement, to prohibit entry into the United States for consumption, or withdrawal from warehouse for consumption, of textile products in Category 649, produced or manufactured in Costa Rica and exported during the twelve-month period which began on January 1, 1981 and extends through December 31, 1981, in excess of 1,685,000 dozen.

EFFECTIVE DATE: January 1, 1981.

FOR FURTHER INFORMATION CONTACT: Ross Arnold, International Trade Specialist, Office of Textiles and Apparel, U.S. Department of Commerce, Washington, D.C. 20230 (202/377-5423).

This letter and the actions taken pursuant to it are not designed to implement all of the provisions of the bilateral agreement, but are designed to assist only in the implementation of certain of its provision.

Arthur Garel,

Acting Chairperson, Committee for the Implementation of Textile Agreements.

November 21, 1980.

Commissioner of Customs, Department of the Treasury,

Washington, D.C.

Dear Mr. Commissioner: Pursuant to the Bilateral Cotton, Wool and Man-Made Fiber Textile Agreement of September 22, 1980, between the Governments of the United States and Costa Rica, and in accordance with the provisions of Executive Order 11651 of March 3, 1972, as amended by Executive Order 11951 of January 6, 1977, you are directed to prohibit, effective on January 1, 1981 and for the twelve-month period extending through December 31, 1981, entry into the United States for consumption and withdrawal from warehouse for consumption of man-made fiber textile products in Category 649, produced or manufactured in Costa Rica, in excess of 1,685,000 dozen.

In carrying out this directive entries of textile products in Category 649 which have been exported to the United States prior to January 1, 1981, shall, to the extent of any unfilled balance, be charged against the level of restraint established for such goods during the twelve-month period beginning on January 1, 1980 and extending through December 31, 1980. In the event that the level of restraint established for that period has been exhausted by previous entries, such goods shall be subject to the level set forth in this letter.

The level set forth above is subject to adjustment in the future according to the provisions of the bilateral agreement of September 22, 1980 between the Governments of the United States and Costa Rica which provide, in part, that: (1) the specific limit may be increased for carryover and carryforward up to 11 percent of the applicable category limit or sublimit; and (2) administrative arrangements or adjustments may be made to resolve minor problems arising in the implementation of the agreement. Any appropriate adjustments under the provisions of the bilateral agreement, referred to above, will be made to you by letter.

A detailed description of the textile categories in terms of T.S.U.S.A. numbers was published in the **Federal Register** on February 28, 1980 (45 FR 13172), as amended on April 23, 1980 (45 FR 27463), and August 12, 1980 (45 FR 53506).

In carrying out the above directions, the Commissioner of Customs should construe entry into the United States for consumption to include entry for consumption into the Commonwealth of Puerto Rico.

The actions taken with respect to the Government of Costa Rica and with respect to imports of man-made fiber textile products from Costa Rica have been determined by the Committee for the Implementation of Textile Agreements to involve foreign affairs functions of the United States. Therefore, these directions to the Commissioner of Customs, which are necessary for the implementation of such actions, fall within the foreign affairs exception to the rule-making provisions of 5 U.S.C. 553. This letter will be published in the **Federal Register**.

Sincerely,

Arthur Garel,

Acting Chairperson, Committee for the Implementation of Textile Agreements.

[FR Doc. 80-37046 Filed 11-26-80; 8:45 am]

BILLING CODE 3510-25-M

DEPARTMENT OF DEFENSE

Corps of Engineers, Department of the Army

Intent To Prepare a Draft Supplement to the Draft Environmental Impact Statement for Fall River Harbor Improvement Dredging Project and Fall River/Providence River Harbors Dredging Actions With Ocean Disposal at Brown's Ledge

AGENCY: U.S. Army Corps of Engineers, DOD.

ACTION: Notice of intent to prepare a Draft Supplement Environmental Impact Statement.

SUMMARY: 1. Description of the Action: In February 1976, a Draft Environmental Impact Statement on the Fall River Improvement was distributed for public review and comment. The primary purpose for preparing the Draft Supplement EIS will be to further evaluate possible alternative disposal options and their impacts, and provide some additional legally required information not present in the original draft. The proposal calls for increasing the depth of the Fall River Channel in Fall River, Massachusetts. The present channel is authorized and maintained at 35 feet below mean low water. Should the project be undertaken, the depth would be increased to 40 feet at mean low water. This action would require the removal of about 4.5 million cubic yards of sediment.

2. Alternatives to be considered:

a. Disposal at upland sites.

b. Disposal in shallow water sites.

c. Disposal in open water sites.

d. Island creation.

e. Marsh creation.

f. A combination of the above as well as others that might be proposed.

g. No action.

3. Environmental Review and Public Involvement: As the study progresses, scoping meetings will be held. The date and location of the scoping meetings will be announced through Public Notice procedures. Consultation with the state Historic Officer and the U.S. Heritage Conservation and Recreation Service will be initiated in accordance witht the National Historic Preservation Act of 1966 and Executive Order 11593. Planning will be coordinated with the U.S. Fish and Wildlife Service on an informal and formal basis, including the procedures required by the Fish and Wildlife Coordination Act of 1958 and the Endangered Species Act Amendments of 1978. In addition, close coordination will be maintained with other Federal, State, and local resource agencies and groups.

4. Significant Issues to be Addressed:

a. The environmental impacts from the various disposal options.

b. The environmental impacts from the dredging operations.

c. The impacts from not undertaking the proposal.

5. Availability: The Draft Supplement EIS should be available by March 1982.

ADDRESS: Questions about the Draft EIS and Draft Supplement can be addressed to: Mr. Del Kidd, Impact Analysis Branch, New England Division, U.S. Army Corps of Engineers, 424 Trapelo Road, Waltham, MA 02254 or by phone at (617) 894-2400, extension 235.

Dated: November 17, 1980.

William E. Hodgson, Jr.,

Colonel, Corps of Engineers, Acting Division Engineer.

[FR Doc. 80-37055 Filed 11-28-80; 8:45 am]

BILLING CODE 3710-24-M

DEPARTMENT OF EDUCATION

Higher Education Programs in Modern Foreign Language Training and Area Studies (Fulbright-Hays); Application Notice for Fiscal Year 1981

Applications are invited for new projects under the Fulbright-Hays Training Grants—Faculty Research Abroad, Foreign Curriculum Consultants, Group Projects Abroad, and Doctoral Dissertation Research Abroad programs.

Authority for these programs is contained in Section 102(b)(6) of the Mutual Educational and Cultural Exchange Act of 1961.

(22 U.S.C. 2452(b)(6))

These programs issue awards to eligible applicants. Eligible applicants for Fulbright-Hays Training Grants are as follows:

a. For the Faculty Research Abroad program, accredited institutions of higher education;

b. For the Foreign Curriculum Consultants program, accredited institutions of higher education, State departments of education, local public school systems, private nonprofit educational organizations, and consortiums of such entities;

c. For the Group Projects Abroad program, accredited institutions of higher education, State departments of education, private nonprofit educational organizations, and consortiums of such entities;

d. For the Doctoral Dissertation Research Abroad program, accredited institutions of higher education which offer doctoral programs in the fields of foreign languages and area studies.

The purpose of the awards is to improve and develop modern foreign language and area studies in the educational structure of the United States.

Closing date for transmittal of applications: An application for a grant must be mailed or hand-delivered by January 15, 1981.

Applications delivered by mail: An application sent by mail must be addressed to the U.S. Department of Education, Application Control Center, Attention: 84.019, Faculty Research Abroad program; 84.020, Foreign Curriculum Consultants program; 84.021, Group Projects Abroad program; 84.022, Doctoral Dissertation Research Abroad program, Washington, D.C. 20202.

An applicant must show proof of mailing consisting of one of the following:

(1) A legibly dated U.S. Postal Service postmark.

(2) A legible mail receipt with the date of mailing stamped by the U.S. Postal Service.

(3) A dated shipping label, invoice, or receipt from a commercial carrier.

(4) Any other proof of mailing acceptable to the U.S. Secretary of Education.

If an application is sent through the U.S. Postal Service, the Secretary does not accept either of the following as proof of mailing: (1) a private metered postmark, or (2) a mail receipt that is not dated by the U.S. Postal Service.

An applicant should note that the U.S. Postal Service does not uniformly provide a dated postmark. Before relying on this method, an applicant should check with its local post office.

An applicant is encouraged to use registered or at least first class mail. Each late applicant will be notified that its application will not be considered.

Applications delivered by hand: An application that is hand-delivered must be taken to the U.S. Department of Education, Application Control Center, Room 5673, Regional Office Building 3, 7th and D Streets, S.W., Washington, D.C.

The Application Control Center will accept a hand-delivered application between 8:00 a.m. and 4:30 p.m. (Washington, D.C. time) daily, except Saturdays, Sundays, and Federal holidays.

An application that is hand-delivered will not be accepted after 4:30 p.m. on the closing date.

Program information: Evaluation criteria and eligibility requirements for the Faculty Research Abroad, and Foreign Curriculum Consultants, Groups Projects Abroad, and Doctoral Dissertation Research Abroad programs appear in the Code of Federal Regulations in 34 CFR Part 662 and the revised selection criteria published in this issue of the Federal Register.

Funding priorities: The Secretary has not established funding priorities for the Faculty Research Abroad, Foreign Curriculum Consultants, and Doctoral Dissertation Research Abroad programs in Fiscal Year 1981. Intensive advanced language training programs will be given priority in the Group Projects Abroad program in Fiscal Year 1981.

Available funds: It is expected that approximately $5,687,500 in U.S. dollars and $936,600 in special foreign currencies will be available for the Faculty Research Abroad, Foreign Curriculum Consultants, Group Projects Abroad and Doctoral Dissertation Research Abroad programs in Fiscal Year 1981.

It is estimated that these funds could support the following distribution of awards:

(a) Eighty-one Faculty Research Abroad fellows at an average cost of approximately $12,000.

(b) Twenty Foreign Curriculum Consultants at an average cost of approximately $17,000.

(c) Forty-three Group Projects Abroad at an average cost of approximately $69,000. It is anticipated that 6–10 intensive advanced language programs in the uncommonly taught languages will be funded. The expected world area distribution of other group projects will be within the following ranges: Africa 3–6; Latin America 2–4; East and Southeast Asia 3–6; East Europe 2–4; Near East 3–6; South Asia 8–12. To ask a question about the countries that are included in these world areas, call the contact person listed below.

(d) One hundred and fifty-two Doctoral Dissertation Research Abroad fellows at an average cost of approximately $15,000. It is anticipated that the world area distribution of these fellowships will be within the following ranges: Africa 18–22; Latin America 18–22; East Asia 28–32; Southeast Asia 13–18; East Europe 28–32; Near East 18–22; South Asia 15–20.

However, these estimates which are based on program experience and avialable of foreign currency, do not bind the U.S. Department of Education to a specific number of grants or to the amount of any grant unless that number is specified by statute or regulations.

Application forms: Application forms and program information packages are expected to be ready for mailing by December 1, 1980. They may be obtained by writing to the Division of International Research and Studies, Office of International Education, U.S. Department of Education, (Room 3669, ROB-3), 400 Maryland Avenue, SW., Washington, D.C. 20202.

Applications must be prepared and submitted in accordance with the regulations, instructions, and forms included in the program information package. The Secretary urges that the narrative portion of the application not exceed the following pages in length:

(a) For the Faculty Research Abroad program, five pages;

(b) For the Foreign Curriculum Consultants program, ten pages;

(c) For the Group Projects Abroad program, twenty pages;

(d) For the Doctoral Dissertation Research Abroad program, five pages.

The Secretary further urges that applicants not submit information that is not requested.

Applicable regulations: Regulations applicable to this program include the following:

(a) Regulations governing the Higher Education Programs in Modern Foreign Language Training and Area Studies (34 CFR Part 662);

(b) Education Department General Administrative Regulations (EDGAR) (34 CFR Part 75 and 77) except as modified by the revised selection criteria published in this issue of the Federal Register.

(c) Revised selection criteria published in this issue of the Federal Register.

Further information: For further information, contact Mr. John Paul, Fulbright-Hays Training Grants, Division of International Research and Studies, Office of International Education, U.S. Department of Education (Room 3669, ROB-3), 400 Maryland Avenue, SW, Washington, D.C. 20202. Telephone (202) 245-2794.

(22 U.S.C. 2452(b)(6))

Dated: November 21, 1980.

Shirley M. Hufstedler,

Secretary of Education.

(Catalog of Federal Domestic Assistance No. 84.019; Faculty Research Abroad program. No. 84.020; Foreign Curriculum Consultants program. No. 84.021; Group Projects Abroad program. No. 84.022; Doctoral Dissertation Research Abroad program)

[FR Doc. 80-37125 Filed 11-26-80; 8:45 am]

BILLING CODE 4000-01-M

DEPARTMENT OF ENERGY

Office of Defense Programs

Dose Assessment Advisory Group; Open Meeting

Pursuant to the provisions of the Federal Advisory Committee Act (Pub. L. 92-463, 86 Stat. 770), notice is hereby given of the following advisory committee meeting. Less than 15-days' notice is being given due to the urgency of the dose assessment project and necessity for immediate guidance to the working task group from the Advisory Group.

NAME: Dose Assessment Advisory Group.

DATE AND TIME:

December 2, 1980—8:30 a.m.—approximately 5:00 p.m.

December 3, 1980—8:30 a.m.—approximately 5:00 p.m.

December 4, 1980—8:30 a.m.—approximately 5:00 p.m.

PLACE: Department of Energy, Nevada Operations Office Auditorium, 2753 South Highland Drive, Las Vegas, Nevada.

CONTACT: Marshall Page, Jr., Deputy Project Manager, Off-Site Radiation Exposure Review Project, Nevada Operations Office, Department of Energy, Box 14100, Las Vegas, Nevada 89114; Telephone: 702-734-3181.

Purpose of group: To provide the Secretary of Energy and the Manager, Nevada Operations Office (NV), with advice and recommendations pertaining to the Off-site Radiation Exposure Review project. This project concerns the evaluation and assessment of the amount of radiation received by members of the offsite population surrounding the Nevada Test Site (NTS) as a result of the nuclear test operations conducted at the NTS.

Tentative agenda: December 2, 1980:

- Introduction and Briefing
- The Litigation Situation
- Charge to the Dose Assessment Advisory Group
- Organization and Management (Review of Original Charters) Off-Site Radiation Exposure Review Project (ORERP)
- Dose Assessment Advisory Group Formation and Administrative Information
- Scientific Content of the Off-Site Radiation Exposure (Biological Dose)
- Information Collection Effort
- Tour of the Coordination and Information Center
- Dose Assessment Advisory Group Open Discussion
- Public Comment (3 minute rule)

December 3, 1980:

- Historical Off-Site Population Exposure (HOPE) Data Base
- Fallout Verification I and II
- Statistics and Statistical Modeling
- Internal Dose I—Source Term
- Pathway Analysis
- Internal Dose II—Screening Calculations and Models
- Discussion
- Public Comment (3 minute rule)

December 4, 1980:

- External Dose
- Discussion and Recommendations
- Public Comment (3 minute rule)

Public participation: The meeting is open to the public. The Chairperson of the Group is empowered to conduct the meeting in a fashion that will, in his judgment, facilitate the orderly conduct of business. Any member of the public who wishes to file a written statement with the Group will be permitted to do so, either before or after the meeting. Members of the public who wish to make oral statements pertaining to agenda items should contact Marshall Page at the address or telephone number listed above.

Transcripts: Available for public review and copying at the Public Reading Room, Room 1E190, Forrestal Building, 1000 Independence Avenue, SW., Washington, D.C., between 8:00 a.m. and 4:30 p.m., Monday through Friday, except Federal holidays.

Executive summary: Available approximately 30 days following the meeting from the Advisory Committee Management Office, telephone 202-252-5187.

Issued in Washington, D.C., on November 24, 1980.

Georgia Hildreth,

Director, Advisory Committee Management.

[FR Doc. 80-37180 Filed 11-26-80; 8:45 am]

BILLING CODE 6450-01-M

Uranium Enrichment Services; Termination Charges

The Department of Energy (DOE) hereby announces revisions to the Notice entitled "Uranium Enrichment Services; Termination Charges" published in the Federal Register on December 15, 1978 (43 FR 58609), hereinafter referred to as the Notice. These revisions increase the termination charges and reflect changes which have occurred since the previous publication of the Notice.

Two of the factors which enter into the calculation of the termination charge are the cost of money to the U.S. Government, and the date when replacement sales of uranium enrichment services can be made to offset sales which are lost by termination. The interest paid by the department of the Treasury on marketable, interest-bearing debt has increased in the past two years, from 6.403% in fiscal year 1977 to 8.202% in fiscal year 1979. Therefore, the cost of money used in the calculations for this revision of the Notice is 8.2% (vs. 6.5% in the previous Notice). Also, the prospects for future sales of uranium enrichment services have become less favorable; hence, for purposes of this Notice, the earliest estimated date for replacement sales is 1992 (vs. 1988 in the previous Notice). The revisions resulting from changes in these factors are reflected in the change in the formula in paragraph 9 and the new termination charge table appearing in paragraph 10.

Up until now, DOE has held to a policy announced on April 21, 1978 (43 FR 17028), which stated that customers who convert from a Long-Term, Fixed-Commitment (LTFC) contract to an Adjustable, Fixed-Commitment (AFC) contract would retain the existing LTFC

enrichment services delivery schedule (contained in Appendix "A" of the LTFC contract) solely for the purpose of computing the charges to be paid in the event of later termination of the Adjustable, Fixed-Commitment contract. This policy was intended to prevent LTFC customers from circumventing the higher termination charges applicable to termination in whole under the LTFC contract, with its 10-year Appendix "A" schedule of deliveries, by first converting to an AFC contract and then terminating the contract at the lower charge derived from the 5-year Appendix "A". The situation has now changed, since the majority of the LTFC contracts have already been converted to AFC contracts, and specific conditions exist in the case of the few remaining LTFC contracts (such as assignment of the first delivery and slippage of reloads at no charge, as permitted by the contract if no construction permit has been issued) which have lead DOE to conclude that a contingency appendix will not be necessary for future conversions of LTFC contracts to AFC contracts. Therefore, DOE hereby changes that policy so that any customer who holds a Long-Term, Fixed-Commitment (LTFC) uranium enrichment services contract on the date of publication of this revision to the Notice and who subsequently converts that LTFC contract to an Adjustable, Fixed-Commitment (AFC) contract will not be required to retain the LTFC Appendix "A" for purposes of later termination, but will carry over the separative work unit (SWU) quantities listed for the first five or six years of deliveries, as appropriate, to constitute the AFC Appendix "A" SWU schedule for the fixed-commitment period.

One other change accomplished by this revision to the Notice is the addition of paragraphs 12 and 13, which are applicable to any AFC contract with a Contingency Appendix "A" which resulted from conversion of an LTFC contract. (Paragraphs 7 and 8 are revised only to the extent necessary to exempt from the coverage of these paragraphs the situations covered by paragraphs 12 and 13). It has been found that customers having such a Contingency Appendix can, in some instances, obtain a partial termination of scheduled AFC enrichment services at no charge. Such partial termination at no charge has been possible if the Contingency Appendix shows no delivery in a particular year while for that same year the AFC Appendix lists a scheduled delivery. A free termination of this type is not equitable to other customers or to the Government. Therefore, the formula for the termination charge in paragraph 12 and the formula for the minimum termination charge in paragraph 13 have been written so as to preclude a free termination under the circumstances referred to above.

DOE has determined that this notice does not require a period for public comment before becoming effective because the present action involves only an update in established DOE policy. A major review and modification of uranium enrichment services termination policy was undertaken in 1978. At that time, a notice was published for comment on April 21, 1978 (43 FR 17028), and the final notice was published on December 15, 1978 (43 FR 58609).

The following revisions are made in the Notice:

1. Paragraphs 7, 8, 9, and 10 of the Notice are revised to read:

7. Except as provided in paragraph 12, which is applicable to any Adjustable, Fixed-Commitment contract with a Contingency Appendix "A" which resulted from conversion of a Long-Term, Fixed-Commitment contract, the termination charge applicable to termination, in part, (other than a partial termination resulting from the rated MWe of the designated facility being less than the lower limit of the gross-MWe range specified in Article II of such Agreement), by the Customer or by DOE of an Adjustable, Fixed-Commitment Contract prior to the date upon which the customer and DOE must agree upon appendices shall be an amount computed as follows:

$$A=\frac{SP}{C}$$

where

A=the termination charge

S=the number of separative work units terminated

C=the number of separative work units estimated to be required by the designated facility over the initial five year delivery period

P=the sum of the advance payments already paid plus any advance payment installment for which payment is due and outstanding

8. Except as provided in paragraph 13, which is applicable to any Adjustable, Fixed-Commitment contract with a Contingency Appendix "A" which resulted from conversion of a Long-Term, Fixed-Commitment contract, the termination charge applicable to termination, in whole or in part (other than a partial termination resulting from the rated MWe of the designated facility being less than the lower limit of the gross MWe range specified in Article II of such contract), by the customer or DOE of an Adjustable, Fixed-Commitment contract subsequent to the date upon which the customer and DOE must agree upon appendices shall be determined by applying to the terminated enriching services a unit charge or charges as provided in the table in paragraph 10 (as adjusted by the provisions of paragraph 9, if applicable); provided, however, that in the event that notice of a termination in whole or in part is received prior to the first scheduled delivery, the termination charge will be not less than a minimum amount computed as follows:

$$B=\frac{SP}{D}$$

where

B=the minimum termination charge

S=the number of separative work units terminated

D=the number of separative work units scheduled for delivery during the initial five-year firm delivery period as set forth in Appendix A of the contract

P=the sum of the advance payment already paid plus any advance payment installment for which payment is due and outstanding.

9. If the customer terminating pursuant to paragraphs 3, 4, 8, or 13 elects to make the termination effective on a date later than the date upon which DOE receives the notice, the applicable termination charges will be arrived at by multiplying the charges derived from paragraph 10 by 1.082^n, where n is the time stated in years and fractions of years between the date of receipt of the notice and the effective date of termination, and such charges will become due on the effective date of termination.

Table of Termination Charges

For advance notice of termination [1]		Termination charge per kilogram unit of separative work terminated, as percentage of applicable enriching services charge [2]						
		If notice of termination is received in fiscal year—						
Greater than (years)	But less than or equal to (years)	1981	1982	1983	1984	1985	1986	1987 or later
0	½	58.6	55.2	51.5	47.5	43.2	38.6	33.5
½	1½	51.0	47.6	43.9	40.0	35.7	31.0	26.0
1½	2½	44.0	40.6	36.9	33.0	28.6	24.0	19.0
2½	3½	37.5	34.1	30.5	26.5	22.2	17.5	12.5
3½	4½	31.5	28.1	24.5	20.5	16.2	11.5	6.5

Table of Termination Charges

For advance notice of termination [1]		Termination charge per kilogram unit of separative work terminated, as percentage of applicable enriching services charge [2]						
		If notice of termination is received in fiscal year—						
Greater than (years)	But less than or equal to (years)	1981	1982	1983	1984	1985	1986	1987 or later
4½	5½	26.0	22.6	18.9	15 0	10.7	6 0	1 0
5½	6½	20.9	17.5	13 8	9 9	5 6	0 9	0
6½	7½	16.2	12.8	9.1	5.1	0.8	0	0
7½	8½	11.8	8.4	4 7	0.8	0	0	0
8½	9½	7.8	4.4	0 7	0	0	0	0
9½	10½	4.1	0.7	0	0	0	0	0
10½	11½	0.6	0	0	0	0	0	0
11½	12½	0	0	0	0	0	0	0
12½		0	0	0	0	0	0	0

[1] For purposes of determining when enriching services would have been furnished but for such termination, enriching services scheduled to be delivered on a monthly basis shall be deemed to be scheduled for delivery on the 15th of such months; and for services scheduled for delivery on a fiscal year basis, they shall be deemed to be scheduled for delivery on April 1 of such fiscal years.

[2] For purposes of determining the applicable enriching services charge per kilogram unit of separative work terminated which have been scheduled for delivery on a monthly basis, such applicable charge shall be the applicable charge scheduled to be effective on the 15th day of such months; and for service scheduled for delivery on a fiscal year basis, such applicable charge shall be the applicable charge scheduled to be effective on April 1 of such fiscal years.

2. New paragraphs 12 and 13 are added as follows:

12. For an Adjustable, Fixed-Commitment contract with a Contingency Appendix "A" which resulted from conversion of a Long-Term, Fixed-Commitment contract, the termination charge applicable to contract termination, in part, (other than a partial termination resulting from the rated MWe of the designated facility being less than the lower limit of the gross MWe range specified in Article II of such Agreement), by the customer or by DOE Prior to the date upon which the customer and DOE must agree upon appendices shall be an amount computed as follows:

A=0.2 NP

Where

A=the termination charge

N=the number of fiscal years in which scheduled SWU deliveries are being terminated, it being understood that if deliveries are terminated in a fiscal year for which zero SWU's are scheduled, such year will nevertheless count as one fiscal year for purposes of determining the value of N.

P=the sum of the advance payments already paid plus any advance payment installment for which payment is due and outstanding; or, in the event advance payments were not required in whole, an amount equal to $3,300 per gross megawatt electric.

13. For an Adjustable, Fixed-Commitment contract with a Contingency Appendix "A" which resulted from conversion of a Long-Term, Fixed-Commitment contract, the termination charge applicable to contract termination, in whole or in part, (other than a partial termination resulting from the rated MWe of the designated facility being less than the lower limit of the gross MWe range specified in Article II of such contract), by the customer or DOE subsequent to the date upon which the customer and DOE must agree upon appendices shall be determined by applying to the terminated enriching services a unit charge or charges as provided in the table in paragraph 10 (as adjusted by the provisions of paragraph 9, if applicable); provided, however, that the termination charge for scheduled uranium enrichment services will not be less than a minimum amount computed as follows:

B=0.2 NP

Where

B=the minimum termination charge

N=the number of fiscal years in which scheduled SWU deliveries are being terminated, it being understood that if deliveries are terminated in a fiscal year for which zero SWU's are scheduled, such year will nevertheless count as one fiscal year for purposes of determining the value of N.

P=the sum of the advance payments already paid plus any advance payment installment for which payment is due and outstanding; or in the event advance payments were not required in whole, an amount equal to $3,300 per gross megawatt electric.

Effective Date. This Notice shall become effective on November 28, 1980.

Dated: November 21, 1980.

Ruth M. Davis,

Assistant Secretary, Resource Applications.

[FR Doc. 80-36963 Filed 11-26-80; 8:45 am]

BILLING CODE 6450-01-M

Economic Regulatory Administration

Dee and Dee Oil Co.; Action Taken on Consent Order

AGENCY: Economic Regulatory Administration, Department of Energy.

ACTION: Notice of action taken and opportunity for comment on Consent Order.

SUMMARY: The Economic Regulatory Administration (ERA) of the Department of Energy (DOE) announces action taken to execute a Consent Order and provides an opportunity for public comment on the Consent Order.

DATES: Effective date: November 13, 1980. Comments by: December 29, 1980.

ADDRESS: Send comments to: Wayne I. Tucker, Southwest District Manager of Enforcement, U.S. Department of Energy, Economic Regulatory Administration, P.O. Box 35228, Dallas, Texas 75235.

FOR FURTHER INFORMATION CONTACT: Wayne I. Tucker, Southwest District Manager of Enforcement, U.S. Department of Energy, Economic Regulatory Administration, P.O. Box 35228, Dallas, Texas 75235 (phone) 214/767-7745.

SUPPLEMENTARY INFORMATION: On November 13, 1980, the Office of Enforcement of the ERA executed a Consent Order with Dee and Dee Oil Company, of Dallas, Texas. Under 10 CFR 205.199J(b), a Consent Order which involves a sum of less than $500,000 in the aggregate, excluding penalties and interest, may be made effective upon its execution.

Because the DOE and Dee and Dee wish to expeditiously resolve this matter as agreed, the DOE has determined that it is in the public interest to make the Consent Order with Dee and Dee, effective as of the date of its execution by the DOE and Dee and Dee.

I. The Consent Order

Dee and Dee, with its home office in Dallas, Texas, is a firm engaged in the resale of motor gasoline, and is subject to the Mandatory Petroleum Price and Allocation Regulations at 10 CFR Parts 210, 211, 212. To resolve certain civil actions which could be brought by the Office of Enforcement of the Economic Regulatory Administration as a result of its audit of sales of motor gasoline the Office of Enforcement, ERA, and Dee and Dee entered into a Consent Order, the significant terms of which are as follows:

1. The period covered by the Consent Order was March 1, 1979 through July 31, 1979, and it included all sales of motor gasoline which was made during that period.

2. By failing to demonstrate that prices charged for motor gasoline was based upon historical accounting records and failure to maintain the necessary

records to justify claims of unrecouped cost.

3. Dee and Dee has agreed to pay a penalty of $2,500.

4. The provisions of 10 CFR 205.199J, including the publication of this Notice, are applicable to the Consent Order.

II. Submission of Written Comments

The ERA invites interested persons to comment on the terms, conditions, or procedural aspects of this Consent Order.

You should send your comments or written notification of a claim to Wayne I. Tucker, Southwest District Manager of Enforcement, U.S. Department of Energy, Economic Regulatory Administration, P.O. Box 35228, Dallas, Texas 75235. You may obtain a free copy of this Consent Order by writing >to the same address or by calling >214/767-7745.

You should identify your comments or written notification of a claim on the outside of your envelope and on the documents you submit with the designation, "Comments on Dee and Dee Oil Company Consent Order." We will consider all comments we receive by 4:30 p.m. local time, on December 29, 1980. You should identify any information or data which, in your opinion, is confidential and submit it in accordance with the procedures in 10 CFR 205.9(f).

Issued in Dallas, Texas on the 18th day of November, 1980.

Wayne I. Tucker,

Southwest District Manager, Economic Regulatory Administration.

[FR Doc. 80-36951 Filed 11-26-80; 8:45 am]

BILLING CODE 6450-01-M

Hertz Corp.; Proposed Compliance Plan

AGENCY: Economic Regulatory Administration, Department of Energy.

ACTION: Notice of proposed compliance plan and opportunity for comment.

SUMMARY: The Economic Regulatory Administration (ERA) of the Department of Energy (DOE) announces that it and The Hertz Corporation, Rent-A-Car Division (Hertz) have agreed to a proposed Compliance Plan (Plan) and provides an opportunity for public comment on the Plan.

DATES: Comments by December 29, 1980.

ADDRESS: Send comments to Thomas M. Holleran, Program Manager, Product Retailer Branch, Office of Enforcement, Economic Regulatory Administration, 2000 M Street NW., Room 5108, Washington, D.C. 20461.

SUPPLEMENTARY INFORMATION: Pursuant to Section 504 of the DOE Act, on October 30, 1980, the DOE executed the Plan with Hertz. Compliance by Hertz with the procedures specified in the Plan would constitute compliance with the motor gasoline pricing regulations.

I. The Compliance Plan

The significant provisions of the Plan are as follows:

1. Hertz will compute its monthly gasoline acquisition costs based on its best estimates. The selling price for each of the rental locations will be estimated by adding the permissible cents-per-gallon markup and applicable taxes to the estimated acquisition cost.

2. As soon as Hertz can establish its actual acquisition costs, it will compute the maximum lawful selling price (MLSP) for each rental location. Actual sales prices will then be compared to the MLSP for the applicable month. If overcharges occurred at any location, Hertz will, during the following month, reduce its selling prices at that location by an amount calculated to refund the overcharge. If the actual selling prices were lower than the MLSP, Hertz will not save or bank those additional costs.

3. If Hertz's sales prices at a particular location exceed the MLSP for six (6) consecutive months, Hertz will pay two (2) months' interest on the 3-month amount in excess of the MLSP.

4. Gasoline consumed in rental vehicles will be calculated by either of two methods. If the renter does not fuel the vehicle during the rental period, the charge for refueling will be based on mileage per gallon values (MPG's). This will be a cents-per-mile value derived by dividing the actual selling price by the MPG's for each category of car. If the renter fuels the vehicle during the rental period, the gasoline consumed will be determined by the fuel gauge reading. The refueling service charge will be determined by multiplying the gallons consumed times the per-gallon selling price.

II. Comments: The ERA Invites Interested Persons To Comment on the Terms, Conditions, or Procedural Aspects of This Plan

You should send your comments to Thomas M. Holleran, Program Manager, Product Retailer Branch, Office of Enforcement, Economic Regulatory Administration, 2000 M St. N.W., Department of Energy, Washington, D.C. 20461. You may obtain a free copy of this Plan by writing to the same address or by calling 202-653-3507.

You should identify your comments on the outside of your envelope and on the documents you submit with the designation. "Comments on Hertz Corporation Compliance Plan." We will consider all comments we receive by 4:30 p.m., local time, on December 29, 1980. You should identify any information or data which, in your opinion, is confidential and submit it in accordance with the procedures in 10 CFR 205.9(f).

Issued in Washington, D.C. on the 21st day of November, 1980.

Dated: November 21, 1980.

Concurrence:

Robert D. Gerring,

Director, Program Operations Division, Office of Enforcement, Economic Regulatory Administration.

Robert G. Heiss,

Assistant General Counsel for Enforcement.

[FR Doc. 80-37069 Filed 11-26-80; 8:45 am]

BILLING CODE 6450-01-M

Port Jefferson Generating Station Units 30 and 40: Intent To Prepare an Environmental Impact Statement (EIS) and Conduct Public Scoping Meeting

AGENCY: Department of Energy, Economic Regulatory Administration.

ACTION: Notice of intent to prepare an Environmental impact statement (EIS) and conduct public scoping meeting.

SUMMARY: The Department of Energy (DOE) announces its intent to prepare an EIS evaluating the impact of its Energy Supply and Environmental Coordination Act of 1974 (ESECA) Prohibition Order for the Port Jefferson Generating Sation Units 30 and 40. These units are located in the village of Port Jefferson, the town of Brookhaven and the county of Suffolk, N.Y., and are owned and operated by the Long Island Lighting Company (LILCO). The Prohibition order will be effective when a Notice of Effectiveness (NOE) is issued and would prohibit the burning of petroleum or natural gas in these units. Subsequent operation of this unit would require the burning of an alternate fuel such as coal. Interested agencies, organizations, and the general public desiring to submit written comments or suggestions for consideration in connection with the preparation of this EIS are invited to do so and/or to attend the public scoping meeting which will be held on December 11, 1980, in order to assist DOE in identifying significant environmental issues and the appropriate scope of the EIS. Parties who desire to present oral comments at the scoping meeting should provide advance notice to the Economic Regulatory Administraion (ERA) as described below.

Upon completion of the draft EIS, its availability will be announced in the Federal Register, at which time further comments will be solicited.

The meeting is scheduled to begin at 7:30 p.m. and will continue until all

persons in attendance wishing to speak have had an opportunity to do so.

Written comments, notice of intent to present comments at the scoping meeting, and questions concerning the meeting should be addressed to: Mr. Steven E. Ferguson, Chief, Environmental Analysis Branch, Office of Fuels Conversion, Economic Regulatory Administration, Department of Energy, 2000 M. Street NW., Washington, D.C. 20461; Telephone (202) 653-3684.

For general information on the EIS process, contact: Robert J. Stern, Acting Director, Division of NEPA Affairs, Office of Environmental Compliance and Overview, Office of the Assistant Secretary for Environment, Department of Energy, 1000 Independence Avenue SW., Washington, D.C. 20585; Telephone (202) 252-4600.

Date and Location of Scoping Meeting: The meeting will begin at 7:30 p.m. on December 11, 1980 in the Port Jefferson High School Auditorium in Port Jefferson, New York.

Written Comments Due: Written comments are to be submitted to Mr. Ferguson by January 16, 1981.

SUPPLEMENTARY INFORMATION: On June 30, 1977, the Federal Energy Administration (FEA) published in the Federal Register a Notice of Intent to Issue Prohibition Orders for 18 powerplants located at 11 generating stations including Units 30 & 40 of the Port Jefferson Generating Station, located in the village of Port Jefferson, N.Y. The prohibition order was issued pursuant to the ESECA (15 USC 791 *et seq.*) (Pub. L. 93-319) as amended by the Energy Policy and Conservation Act of 1975 (Pub. L. 94-163) and as further amended by the Federal Energy Administration Authorization Act of 1977 (Pub. L. 95-70). On October 1, 1977, DOE took over the functions of FEA, including its authorities and responsibilities under ESECA. If made effective, the order will prohibit these units from burning natural gas or petroleum as its primary energy source. The prohibition order was based on an FEA finding that this powerplant has, or previously had, the technical capability to use an alternate fuel as a primary energy source. It was determined that this powerplant was designed and constructed to burn coal as a primary energy source and had previously burned coal.

Environmental Impact Statement

The EIS will present a comprehensive analysis of the environmental impact of ERA's proposed action in issuing an effective order prohibiting Units 30 & 40 of the Port Jefferson Generating Station from burning natural gas or petroleum as primary fuels. This analysis will discuss the environmental consequences of the proposal and alternatives, including the environmental impacts of burning coal or other alternate fuels as primary fuels. Among the impacts to be discussed are air quality, water quality, solid waste generation and disposal, and transportation and storage of fuel, as well as other impacts determined to be potentially significant during the public comment process. In addition, the EIS will evaluate methods for meeting the requirements of the Clean Air Act, Federal Water Pollution Control Act, Resource Conservation and Recovery Act, and other relevant environmental statutes. The EIS will be prepared in accordance with Section 102(2)(c) of the National Environmental Policy Act (NEPA).

It is possible that DOE may, in the future issue prohibition orders to other facilities in the area of the Port Jefferson Generating Station. If it appears that the environmental effects of conversions in proximity result in cumulative impacts, DOE may opt to combine these conversions in a single EIS. DOE will assess various strategies for combining or tiering requisite NEPA documentation that may better serve the decision making process. DOE solicits the public's views and suggestions concerning this subject.

Scoping Meeting

DOE desires to know what the public considers to be the major environmental issues associated with prohibiting Port Jefferson Units 30 & 40 from burning natural gas or petroleum as their primary energy source. The meeting on December 11, 1980, at the address and time noted at the beginning of this notice, will be held to receive comments on the strucutre and scope of the EIS, anticipated energy/environmental problems, actions that might be taken to address them and reasonable alternatives which should be considered.

The scoping meeting will be conducted informally with the presiding officer affording all interested individuals in attendance an opportunity to speak. A transcript of the meeting will be prepared. The presiding officer will establish the order of speakers and provide any additional procedures necessary for the conduct of the meeting. Attendees at the meeting will be asked to register.

If possible, those planning to present information at the meeting should notify Mr. Ferguson. Participants are encouraged to submit to Mr. Ferguson, in advance, their intent to participate, and copies of any written material. However, public participation is encouraged even without the advance submission of written material.

Speakers will be allocated approximately fifteen minutes for their oral statements. Should any speaker desire to have additional time, or to provide further information for the record, such additional information may be submitted in writing by January 16, 1981.

Written comments will be considered and given equal weight with oral comments. All comments or suggestions received will be carefully considered in the preparation of the draft EIS.

A transcript of the scoping meeting will be retained by DOE and made available for inspection at the Freedom of Information Library, Room 1E-190, Forrestal Building, 1000 Independence Ave., S.W., Washington, D.C. 20585, between the hours of 8:00 a.m. and 4:30 p.m. Monday through Friday. A transcript of the scoping meeting will also be available at the Port Jefferson Library, 100 Thompson Street, Port Jefferson, New York during the following hours: Monday-Thursday 9:30 a.m.-9 p.m.; Friday 9:30 a.m.-7 p.m.; Saturday 9 a.m.-5 p.m.; and Sundays 1 p.m.-5 p.m. In addition anyone may make arrangements with the reporter to purchase a copy of the transcript.

Those individuals who do not wish to submit comments or suggestions at this time but who would like to receive a copy of the draft EIS for review and comment when it is issued should so notify Mr. Ferguson.

Any questions regarding the meeting should be addressed to Mr. Ferguson.

Issued in Washington, D.C., November 24, 1980.

Ruth C. Clusen,

Assistant Secretary for Environment.

[FR Doc. 80-37080 Filed 11-26-80; 8:45 am]

BILLING CODE 6450-01-M

Office of Energy Research

Biomass Panel; Energy Research Advisory Board; Meeting

Notice is hereby given of the following meeting:

Name: Biomass Panel of the Energy Research Advisory Board (ERAB). ERAB is a Committee constituted under the Federal Advisory Committee Act (Pub. L. 92-463, 86 Stat. 770).

Date and Time: December 18-19, 1980, 8:30 a.m. to 4:30 p.m.

Place: Department of Energy, Forrestal Building, Room 4A-104, 1000 Independence Avenue, S.W., Washington, D.C. 20585.

Contact: Eudora M. Taylor, Staff Assistant, Energy Research Advisory Board, Department of Energy, Forrestal Building, MS 3F-032, 1000 Independence Avenue, S.W., Washington, D.C. 20585, Telephone: 202/252-8933.

Purpose of the Parent Board: To advise the Department of Energy on the overall research and development conducted in DOE and to provide long-range guidance in these areas to the Department.

Tenative Agenda: Discussion of issues to be addressed in the technical assessment of biomass energy. Issues include:

Biomass sources.

Energetics and economics of biomass conversion.

Alcohol fuels.

Impacts of biomass energy utilization.

Public Participation: The meeting is open to the public. Written statements may be filed with the Panel either before or after the meeting. Members of the public who wish to make oral statements pertaining to agenda items should contact the Energy Research Advisory Board at the address or telephone number listed above. Requests must be received five days prior to the meeting and reasonable provision will be made to include the presentation on the agenda. The Chairperson of the Panel is empowered to conduct the meeting in a fashion that will facilitate the orderly conduct of business.

Transcripts: Available for public review and copying at the Freedom of Information Public Reading Room, 1E-190, Forrestal Building, 1000 Independence Avenue, S.W., Washington, D.C., between 8:00 a.m. and 4:00 p.m. Monday through Friday, except Federal Holidays.

Issued at Washington, D.C. on November 21, 1980.

Edward A. Frieman,

Director of Energy Research.

[FR Doc. 80-36950 Filed 11-26-80; 8:45 am]

BILLING CODE 6450-01-M

Intertial Confinement Fusion Review Panel, Energy Research Advisory Board; Meeting

Notice is hereby given of the following meeting:

Name: Intertial Confinement Fusion Review Panel of the Energy Research Advisory Board (ERAB). ERAB is a Committee constituted under the Federal Advisory Committee Act (Pub. L. 92-463, 86 Stat. 770).

Date and Time: December 18, 1980, 9:00 am to 12:00 noon.

Place: Department of Energy, Forrestal Building, Room BVE-069, 1000 Independence Avenue, S.W., Washington, D.C. 20585.

Contact: Eudora M. Taylor, Staff Assistant, Energy Research Advisory Board, Department of Energy, Forrestal Building, MS 3F-032, 1000 Independence Avenue, S.W., Washington, D.C. 20585, Telephone: 202/252-8933.

Purpose of the Parent Board: To advise the Department of Energy on the overall research and development conducted in DOE and to provide long-range guidance in these areas to the Department.

Tentative Agenda:

Terms of Reference.

Overview of ICF Program.

Review Panel Assignments.

Public Participation: The meeting is open to the public. Written statements may be filed with the Review Panel either before or after the meeting. Members of the public who wish to make oral statements pertaining to agenda items should contact the Energy Research Advisory Board at the address or telephone number listed above. Requests must be received five days prior to the meeting and reasonable provision will be made to include the presentation on the agenda. The Chairperson of the Review Panel is empowered to conduct the meeting in a fashion that will facilitate the orderly conduct of business.

Transcripts: Available for public review and copying at the Freedom of Information Public Reading Room, 1E-190, Forrestal Building, 1000 Independence Avenue, S.W., Washington, D.C., between 8:00 am and 4:00 pm Monday through Friday, except Federal Holidays.

Issued at Washington, D.C. on November 21, 1980.

Edward A. Frieman,

Director of Energy Research.

[FR Doc. 80-36954 Filed 11-26-80; 8:45 am]

BILLING CODE 6450-01-M

Federal Energy Regulatory Commission

[Docket No. ER81-113-000]

Northern States Power Co.; Filing

November 20, 1980.

The filing Company submits the following:

Take notice that Northern States Power Company (Northern States) on November 13, 1980, tendered for filing Supplement No. 1, dated November 5, 1980, to the Municipal Resale Transmission and Transformation Service Agreement, dated September 14, 1977, with the City of Ada.

Supplement No. 1 amends the original Agreement and provides for a Second Point of Delivery to the City of Ada.

Any person desiring to be heard or to protest said filing should file a petition to intervene or protest with the Federal Energy Regulatory Commission, 825 North Capitol Street NE., Washington, D.C. 20426, in accordance with §§ 1.8, 1.10 of the Commission's Rules of Practice and Procedure (18 CFR 1.8, 1.10). All such petitions or protests should be filed on or before December 4, 1980. Protests will be considered by the Commission in determining the appropriate action to be taken, but will not serve to make protestants parties to the proceeding. Any person wishing to become a party must file a petition to intervene. Copies of this filing are on file with the Commission and are available for public inspection.

Kenneth F. Plumb,

Secretary.

[FR Doc. 80-36971 Filed 11-26-80; 8:45am]

BILLING CODE 6450-85-M

[Docket No. ES79-40]

Pacific Power & Light Co.; Renotice of Application

November 20, 1980.

Take notice that on November 12, 1980, Pacific Power & Light Company (Applicant) filed an amendment to its application seeking authorization to increase the aggregate amount of short-term debt outstanding from $200 million to $250 million. Presently the Applicant is authorized to issue up to $100 million of unsecured notes and up to $100 million of Commercial Paper on or before June 30, 1981, with a final maturity date of not later than June 30, 1981. Applicant is seeking to increase the amount of Commercial Paper outstanding from $100 million to $150 million, with no change in issue or maturity dates.

Any person desiring to be heard or to make any protest with reference to said application should on or before December 1, 1980, file with the Federal Energy Regulatory Commission, Washington, D.C. 20426, petitions to intervene or protests in accordance with the requirements of the Commission's Rules of Practice and Procedure (18 CFR 1.8 or 1.10). The application is on file with the Commission and available for public inspection.

Kenneth F. Plumb,

Secretary.

[FR Doc. 80-36972 Filed 11-26-80; 8:45 am]

BILLING CODE 6450-85-M

[Docket No. CP81-41-000]

Panhandle Eastern Pipe Line Co.; Application

November 20, 1980.

Take notice that on November 8, 1980, Panhandle Eastern Pipe Line Company (Applicant), P.O. Box 1642, Houston, Texas 77001, filed in Docket No. CP81-41-000 an application pursuant to Section 7(c) of the Natural Gas Act for a certificate of public convenience and necessity authorizing the construction and operation of facilities required to make sales of natural gas for domestic, grain drying and irrigation usage either directly or thorugh Town Gas Company (Town Gas) for resale to serve right-of-

way grantors, all as more fully set forth in the application which is on file with the Commission and open to public inspection.

Applicant proposes to construct and operate 17 taps and to provide direct sales to 17 right-of-way grantors as follows:

Location of points of delivery	Name of applicant	End use
Kingfisher County, Okla.	Gust F. Emmerich	Domestic.
Kingfisher County, Okla.	Richard G. Emmench	Domestic.
Kingfisher County, Okla.	Andrew O. Green	Irrigation.
Woods County, Okla	Omer D. Kimbro	Domestic.
Edwards County, Kans.	Ray E. Curney	Domestic.
Kiowa County, Kans	Elmer E. Davis	Irrigation.
Kiowa County, Kans	Donald C. Kendall	Irrigation.
Kiowa County, Kans	Franklin D. Lewis	Domestic.
Pratt County, Kans	Clarence F. Newby	Irrigation.
Pratt County, Kans	Thad C. Robbins Trust.	Irrigation.
Reno County, Kans	John L. Conkling	Domestic.
Seward County, Kans	Clarence C. Davis	Domestic.
Seward County, Kans	John Dreitz	Irrigation.
Audrain County, Mo	Philip Donald Shire	Irrigation.
Cass County, Mo	Raymond V. Rodgers	Domestic.
Marion County, Mo	Kenneth D. Kizer	Domestic.
Randolph County, Mo	Marshall L. Mead	Domestic.

Applicant further proposes to construct and operate three new delivery points to Town Gas in Illinois, to provide service to 3 right-of-way grantors as follows:

Location of points of delivery	Name of applicant	End use
Sangamon County, Ill	John H. Cessna	Domestic and grain drying.
Vermilion County, Ill	William E. Bush	Domestic and grain drying.
Vermilion County, Ill	Hoyle D. Nuebert	Domestic.

Applicant estimates the total cost of the proposed facilities to be $42,250 to be financed from cash on hand.

Applicant asserts that it would not increase its currently authorized sales level to meet these customers' needs.

Any person desiring to be heard or to make any protest with reference to said application should on or before December 15, 1980, file with the Federal Energy Regulatory Commission, Washington, D.C. 20426, a petition to intervene or a protest in accordance with the requirements of the Commission's Rules of Practice and Procedure (18 CFR 1.8 or 1.10) and the Regulations under the Natural Gas Act (18 CFR 157.10). All protests filed with the Commission will be considered by it in determining the appropriate action to be taken but will not serve to make the protestants parties to the proceeding. Any person wishing to become a party to the proceeding or to participate as a party in any hearing therein must file a petition to intervene in accordance with the Commission's Rules.

Take further notice that, pursuant to the authority contained in and subject to jurisdiction conferred upon the Federal Energy Regulatory Commission by Sections 7 and 15 of the Natural Gas Act and the Commission's Rules of Practice and Procedure, a hearing will be held without further notice before the Commission or its designee on this application if no petition to intervene is filed within the time required herein, if the Commission on its own review of the matter finds that a grant of the certificate is required by the public convenience and necessity. If a petition for leave to intervene is timely filed, or if the Commission on its own motion believes that a formal hearing is required, further notice of such hearing will be duly given.

Under the procedure herein provided for, unless otherwise advised, it will be unnecessary for Applicant to appear or be represented at the hearing.

Kenneth F. Plumb,

Secretary.

[FR Doc. 80-36973 Filed 11-26-80; 8:45 am]

BILLING CODE 6450-85-M

[Docket No. RA81-21-000]

Robert Gregory Enterprises d.b.a. Bubble Machine; Filing of Petition for Review

Issued: November 21, 1980.

Take notice that Robert Gregory Enterprises d.b.a. Bubble Machine on November 12, 1980, filed a Petition for Review under 42 U.S.C. § 7194(b) (1977 Supp.) from an order of the Secretary of Energy (Secretary).

Copies of the petition for review have been served on the Secretary and all participants in prior proceedings before the Secretary.

Any person who participated in the prior proceedings before the Secretary may be a participant in the proceeding before the Commission without filing a petition to intervene. However, any such person wishing to be a participant is requested to file a notice of participation on or before December 5, 1980, with the Federal Energy Regulatory Commission, 825 North Capitol Street, N.E., Washington, D.C. 20426. Any other person who was denied the opportunity to participate in the prior proceedings before the Secretary or who is aggrieved or adversely affected by the contested order, and who wishes to be a participant in the Commission proceeding, must file a petition to intervene on or before December 5, 1980, in accordance with the Commission's Rules of Practice and Procedure (18 CFR §§ 1.8 and 1.40(e)(3)).

A notice of participation or petition to intervene filed with the Commission must also be served on the parties of record in this proceeding and on the Secretary of Energy through John McKenna, Office of General Counsel, Department of Energy, Room 6H-025, 1000 Independence Avenue, S.W., Washington, D.C. 20585.

Copies of the petition for review are on file with the Commission and are available for public inspection at Room 1000, 825 North Capitol St., N.E., Washington, D.C. 20426.

Kenneth F. Plumb,

Secretary.

[FR Doc. 80-36974 Filed 11-26-80; 8:45 am]

BILLING CODE 6450-85-M

[Docket No. TC81-13-000]

Southwest Gas Corp.; Tariff Filing

November 20, 1980.

Take notice that on November 17, 1980, Southwest Gas Corporation (Southwest), P.O. Box 15015, Las Vegas, Nevada 89114, filed in Docket No. TC81-13-000 a request for permission to withdraw Second Revised Sheet No. 25C to its FERC Gas Tariff, Original Volume No. 1, filed October 28, 1980, pursuant to Commission Order No. 55-B of August 11, 1980, in Docket No. RM79-40 to amend the index of entitlements for Priority 1 and 2(a) customers. In place of Second Revised Sheet No. 25C Southwest has tendered for filing Substitute Second Revised Sheet No. 25C, together with a request for waiver of the notice requirements of the Commission's Regulations to permit the substitute tariff sheet to become effective on December 1, 1980.

Second Revised Tariff Sheet No. 25C provides the following index of end-use volumes at 14.73 psia:

	Priority 1	Priority 2(a)
Peak day:		
Sierra Pacific Power Co	38,913	642
CP National	10,569	
Southwest Gas Corp:		
Northern Nevada	31,134	154
Northern California	6,466	
Annual:		
Sierra Pacific Power Co	6,129,646	113,832
CP National	1,741,222	
Southwest Gas Corp:		
Northern Nevada	4,178,538	18,027
Northern California	836,227	

Any person desiring to be heard or to make any protest with reference to the filing of the substitute tariff sheet should on or before December 5, 1980, file with

the Federal Energy Regulatory Commission, Washington, D.C. 20426, a petition to intervene or a protest in accordance with the requirements of the Commission's Rules of Practice and Procedure (18 CFR 1.8 or 1.10). All protests filed with the Commission will be considered by it in determining the appropriate action to be taken but will not serve to make the protestants parties to the proceeding. Any person wishing to become a party to a proceeding or to participate as a party to a proceeding or to participate as a party in any hearing therein must file a petition to intervene in accordance with the Commission's Rules. Any persons who have heretofore filed need not file again.

Kenneth F. Plumb,

Secretary.

[FR Doc. 80-36975 Filed 11-26-80; 8:45am]

BILLING CODE 6450-85-M

[Docket No. ER81-121-000]

Virginia Electric and Power Co.; Proposed Changes in Rate and Charges

November 21, 1980.

The filing Company submits the following:

Take notice that Virginia Electric and Power Company (Vepco) on November 14, 1980 tendered for filing proposed changes in its electric resale rate schedules presently on file with the Commission which are applicable to Rural Electric Cooperatives and Municipalities. Based on the test period 12 months ending December 31, 1981 conditions, Vepco estimates that the proposed changes in resale base rates will increase annual revenues from Cooperatives by $11.9 million, or 10.3 percent, and from Municipal Customers by $6.5 million, or 9.6 percent.

Although Vepco has filed for a proposed $18.5 million increase in the Wholesale Customers' basic rates, those same customers will realize an estimated annual fuel savings of $29.8 million due to the operation of the Company's North Anna Nuclear Unit 2. The proposed effective date for the increased rates is January 13, 1981.

Vepco states that the increase in wholesale rates is needed to compensate the Company for additional costs created by North Anna Unit 2, the Company's fourth nuclear unit, which is expected to begin commercial operation before the end of 1980.

Copies of proposed riders which would be applicable to rate schedules presently on file were served upon all of Vepco's jurisdictional Wholesale Customers, the Virginia State Corporation Commission and the North Carolina Utilities Commission.

Any person desiring to be heard or to protest said application should file a petition to intervene or protest with the Federal Energy Regulatory Commission, 325 North Capitol Street, N.E., Washington, D.C. 20426, in accordance with §§ 1.8 and 1.10 of the Commission's Rules of Practice and Procedure (18 CFR 1.8, 1.10). All such petitions or protests should be filed on or before December 12, 1980. Protests will be considered by the Commission in determining the appropriate action to be taken, but will not serve to make protestants parties to the proceeding. Any person wishing to become a party must file a petition to intervene. Copies of this application are on file with the Commission and are available for public inspection.

Kenneth F. Plumb,

Secretary.

[FR Doc. 80-36976 Filed 11-26-80; 8:45 am]

BILLING CODE 6450-85-M

[Docket No. ER81-112-000]

The Washington Water Power Co.; Filing

November 21, 1980.

Take notice that the Washington Water Power Company (Washington Water) tendered for filing a notice of cancellation of Rate Schedule FPC No. 40, Supplement No. 47 effective April 23, 1969. Washington Water states that the pro-effective date of this termination is February 29, 1980.

Any person desiring to be heard or to protest said filing should file a petition to intervene or protest with the Federal Energy, Regulatory Commission, 825 North Capitol Street, N.E., Washington, D.C. 20426, in accordance with §§ 1.8 and 1.10 of the Commission's Rules of Practice and Procedure (18 CFR 1.8, 1.10). All such petitions or protests should be filed on or before December 12, 1980. Protests will be considered by the Commission in determining the appropriate action to be taken, but will not serve to make protestants parties to the proceeding. Any person wishing to become a party must file a petition to intervene. Copies of this filing are on file with the Commission and are available for public inspection.

Kenneth F. Plumb,

Secretary

[FR Doc. 80-36977 Filed 11-26-80; 8:45 am]

BILLING CODE 6450-85-M

[Docket No. RA80-94]

William's Mobil Service; Filing of Petition for Review

Issued: November 21, 1980.

Take notice that William's Mobil Service on August 13, 1980, filed a Petition for Review under 42 U.S.C. 7194(b) (1977) Supp. from an order of the Secretary of Energy (Secretary).

Copies of the petition for review have been served on the Secretary and all participants in prior proceedings before the Secretary.

Any person who participated in the prior proceedings before the Secretary may be a participant in the proceeding before the Commission without filing a petition to intervene. However, any such person wishing to be a participant is requested to file a notice of participation on or before December 5, 1980, with the Federal Energy Regulatory Commission, 825 North Capitol Street N.E., Washington, D.C. 20426. Any other person who was denied the opportunity to participate in the prior proceedings before the Secretary or who is aggrieved or adversely affected by the contested order, and who wishes to be a participant in the Commission proceeding, must file a petition to intervene on or before December 5, 1980, in accordance with the Commission's Rules of Practice and Procedure (18 CFR 1.8 and 1.40(e)(3)).

A notice of participation or petition to intervene filed with the Commission must also be served on the parties of record in this proceeding and on the Secretary of Energy through John McKenna, Office of General Counsel, Department of Energy, Room 6H-025, 1000 Independence Avenue, S.W., Washington, D.C. 20585.

Copies of the petition for review are on file with the Commission and are available for public inspection at Room 1000, 825 North Capitol St., N.E., Washington, D.C. 20426.

Kenneth F. Plumb,

Secretary.

[FR Doc. 80-36978 Filed 11-26-80; 8:45 am]

BILLING CODE 6450-85-M

[Docket No. ER81-122-000]

Edison Sault Electric Co.; Cancellation

November 21, 1980.

Take notice that Edison Sault Electric Company (Edison Sault) tendered for filing a notice of cancellation of FPC Rate Schedule No. 4, as supplemented, which represents a contract, dated January 27, 1964, as supplemented, by and between Edison Sault and Cloverland Electric Cooperative, Inc.

Edison Sault proposes an effective date of June 30, 1980.

Any person desiring to be heard or to protest said filing should file a petition to intervene or protest with the Federal Energy Regulatory Commission, 825 North Capitol Street, N.E., Washington, D.C. 20426, in accordance with §§ 1.8 and 1.10 of the Commission's Rules of Practice and Procedure (18 CFR 1.8, 1.10). All such petitions or protests should be filed on or before December 12, 1980. Protests will be considered by the Commission in determining the appropriate action to be taken, but will not serve to make protestants parties to the proceeding. Any person wishing to become a party must file a petition to intervene. Copies of this filing are on file with the Commission and are available for public inspection.

Kenneth F. Plumb,

Secretary.

[FR Doc. 80-36980 Filed 11-26-80; 8:45 am]

BILLING CODE 6450-85-M

[Docket No. EL81-2-000]

Electric Cooperatives of Kansas; Filing

November 21, 1980.

The filing company submits the following:

Take notice that on November 13, 1980, Electric Cooperatives of Kansas (ECK), submitted for filing a petition for a declaratory order that the monthly fuel cost adjustment by Central Telephone and Utilities Corporation (CTU) and the Kansas Power and Light Company (KPL) are improper and violate § 35.14 of the Commission's Rules and Regulations.

ECK contends that both CTU and KPL are including in their fuel cost adjustment clauses the cost of limestone used in pollution control facilities. According to ECK, costs associated with pollution control facilities are not to be included in the fuel adjustment clause.

As a result of the alleged wrongful inclusion of the cost of pollution control facilities, ECK requests that the Commission declare that such inclusion is improper under the rules and that the Commission order KPL and CTU to refund the amount collected as a result of the inclusion of the cost of limestone.

Any person desiring to be heard or to protest said application should file a petition to intervene or protest with the Federal Energy Regulatory Commission, 825 North Capitol Street, N.E., Washington, D.C. 20426, in accordance with §§ 1.8 and 1.10 of the Commission's Rules of Practice and Procedure (18 CFR 1.8 or 1.10). All such petitions or protests should be filed on or before December 17, 1980. Protests will be considered by the Commission in determining the appropriate action to be taken but will not serve to make protestants parties to the proceeding. Any person wishing to become a party must file a petition to intervene. Copies of this application are on file with the Commission and are available for public inspection.

Kenneth F. Plumb,

Secretary.

[FR Doc. 80-36981 Filed 11-26-80; 8:45 am]

BILLING CODE 6450-85-M

[Docket No. CP81-43-000]

Energy Gathering, Inc., Application for Exemption

November 20, 1980.

Take notice that on November 3, 1980, Energy Gathering, Inc. (Applicant), 8561 Long Point Road, Houston, Texas 77055, filed in Docket No. CP-81-43-000 an application pursuant to Section 1(c) of the Natural Gas Act for an exemption from the provisions of the Act and the rules and regulations thereunder, all as more fully set forth in the application which is on file with the Commission and open for public inspection.

Applicant states that Coronado Transmission Company (Coronado) has entered into a gas sales agreement with Natural Gas Pipeline Company of America (Natural) for the purpose of purchasings gas from Natural. It is further stated that Natural currently has a pending application for permission to sell and transport such gas to Coronado.

It is asserted that Coronado has now determined to assign all of its rights under the said sales agreement to Applicant contingent upon Applicant's receiving a Section 1(c) exemption from the natural Gas Act, and that if granted such exemption by the Commission, Applicant would take title to the gas sold by Natural pursuant to the agreement. Coronado would, therefore, never be in possession of nor hold title to the subject gas, it is said.

It is further asserted that Applicant would take delivery of the subject gas at one or more of four points in the State of Texas located in the counties of Jim Wells, Brazoria, Liberty and Jefferson. The facilities necessary to take delivery of gas at these four points would be constructed and owned by Applicant, it is said.

Applicant presently contemplates that it would sell the gas in the Gulf Coast or south Texas areas of the state depending upon the point of delivery of the gas by Natural. Applicant submits that the gas would be wholly consumed within Texas and would be used to balance system loads in preparation for the coming winter heating season. It is asserted by Applicant that such load balancing is necessary because of the unanticipated demand for gas occurring within Texas during the past summer.

It is stated that on October 27, 1980, the Railroad Commission of the State of Texas certified that the natural gas rates, service and facilities of Applicant are subject to the regulatory jurisdiction of the Railroad Commission of Texas and that it is exercising such jurisdiction.

Any person desiring to be heard or to make any protest with reference to said application should on or before December 15, 1980, file with the Federal Energy Regulatory Commission, Washington, D.C. 20426, a petition to intervene or a protest in accordance with the requirements of the Commission's Rule of Practice and Procedure (18 CFR 1.8 or 1.10). All protests filed with the Commission will be considered by it in determining the appropriate action to be taken but will not serve to make the protestants parties to the proceeding. Any person wishing to become a party to a proceeding or to participate as a party in any hearing therein must file a petition to intervene in accordance with the Commission's Rules.

Kenneth F. Plumb,

Secretary.

[FR Doc. 80-36982 Filed 11-26-80; 8:45 am]

BILLING CODE 6450-85-M

[Docket No. ES81-14-000]

Illinois Power Co.; Application

November 21, 1980.

Take notice that on November 10, 1980, Illinois Power Company (Applicant) filed an application seeking authority, pursuant to Section 204 of the Federal Power Act, to issue up to $300,000,000 of short-term debt to be issued from time to time with a final maturity date of not later than December 31, 1982.

Any person desiring to be heard or to make any protest with reference to said application should on or before December 10, 1980, file with the Federal Energy Regulatory Commission, Washington, D.C. 20426, petitions to intervene or protests in accordance with the requirements of the Commission's Rules of Practice and Procedure (18 CFR 1.8 or 1.10). The application is on file

with the Commission and available for public inspection.

Kenneth F. Plumb,

Secretary.

[FR Doc. 80-36963 Filed 11-26-80; 8:45 am]

BILLING CODE 6450-85-M

[Docket No. ES81-13-000]

Iowa Southern Utilities Co.; Application

November 21, 1980.

Take notice that on November 10, 1980, Iowa Southern Utilities Company (Applicant) filed a request with the Commission, pursuant to section 204 of the Federal Power Act, for authority to issue up to $20 million of five-year unsecured notes.

Any person desiring to be heard or to make any protest with reference to said application should on or before December 10, 1980, file with the Federal Energy Regulatory Commission, Washington, D.C. 20426, petitions to intervene or protests in accordance with the requirements of the Commission's Rules of Practice and Procedure (18 CFR 1.8 or 1.10). The application is on file with the Commission and available for public inspection.

Kenneth F. Plumb,

Secretary.

[FR Doc. 80-36964 Filed 11-26-80; 8:45 am]

BILLING CODE 6450-85-M

[Docket No. ER81-120-000]

Mississippi Power Co.; Filing

November 21, 1980.

The filing Company submits the following:

Take notice that Mississippi Power Company (MPC) on November 13, 1980, tendered for filing Supplement Agreement with Coast Electric Power Association (CEPA) under its FERC Electric Tariff Original Volume No. 1. This agreement provides for a new delivery point to be established at Westonia. To effect this change, MPC and CEPA have entered into a supplemental agreement under the Company's FERC Electric Tariff Original Volume No. 1 (Second Revised Sheet No. 14).

MPC agrees to deliver up to a maximum of 2,000 kilowatts at 115,000 volts at the connections to the customer's 115 KV line facilities located in Section 34, Township 8 South, Range 16 West, Hancock County, Mississippi.

MPC states that this supplement will become effective on or about March 1, 1981, when the required additional facilities will be energized.

Any person desiring to be heard or to protest said filing should file a petition to intervene or protest with the Federal Energy Regulatory Commission, 825 North Capitol Street, Northeast, Washington, D.C. 20426, in accordance with §§ 1.8 and 1.10 of the Commission's Rules of Practice and Procedure (18 CFR 1.8, 1.10). All such petitions or protest should be filed on or before December 12, 1980. Protests will be considered by the Commission in determining the appropriate action to be taken, but will not serve to make protestants parties to the proceeding. Any person wishing to become a party must file a petition to intervene. Copies of this filing are on file with the Commission and are available for public inspection.

Kenneth F. Plumb,

Secretary.

[FR Doc. 80-36965 Filed 11-26-80; 8:45 am]

BILLING CODE 6450-85-M

[Docket No. ER81-115-000]

Montana Power Co.; Filing

November 20, 1980.

The filing Company submits the following:

Take notice that the Montana Power Company (Montana) on November 13, 1980, tendered for filing in accordance with Section 35 of the Commission's regulations, Letter Agreements with Southern California Edison Company (Edison). Montana states that these Letter Agreements provide for the sale of firm energy between Montana and Edison.

Montana indicates that the proposed Letter Agreements increased revenues from jurisdictional sales by $1,531,088.29, based upon energy delivered from July 12, 1980 through August 31, 1980. Montana states that the rate for firm energy under these Letter Agreements was negotiated.

An effective date of July 12, 1980 is proposed and waiver of the Commission's requirements is therefore requested.

Montana also tendered for filing a Notice of Cancellation of Rate Schedule —— and all its supplements, and agreement for the sale of firm energy between Montana and Southern California Edison Company (Edison). Montana states that the agreement has expired as of its own terms and has not been renewed.

Any person desiring to be heard or to protest said filing should file a petition to intervene or protest with the Federal Energy Regulatory Commission, 825 North Capitol Street, N.E., Washington, D.C. 20426, in accordance with §§ 1.8 and 1.10 of the Commission's Rules of Practice and Procedure (18 CFR 1.8, 1.10). All such petitions or protests should be filed on or before December 4, 1980. Protests will be considered by the Commission in determining the appropriate action to be taken, but will not serve to make protestants parties to the proceeding. Copies of this filing are on file with the Commission and are available for public inspection.

Kenneth F. Plumb,

Secretary.

[FR Doc. 80-36966 Filed 11-26-80; 8:45 am]

BILLING CODE 6450-85-M

[Docket No. ER81-117-000]

Montana Power Co.; Filing

November 21, 1980.

The filing Company submits the following:

Take notice that The Montana Power Company ("Montana") on November 13, 1980, tendered for filing in accordance with Section 35 of the Commission's regulations, a Letter Agreement with the City of Glendale ("Glendale"). Montana states that this letter Agreement provides for the sale of firm energy between Montana and Glendale.

Montana indicates that the proposed Letter Agreement increased revenues from jurisdicational sales by $454,009.08, based upon energy delivered from July 12, 1980, through August 31, 1980. Montana states that the rate for firm energy under this Letter Agreement was negotiated.

An effective date of July 12, 1980, is proposed and waiver of the Commission's requirements is therefore requested.

Montana also tendered for filing a Notice of Cancellation of Rate Schedule and all its supplements, an agreement for the sale of firm energy between Montana and the City of Glendale ("Glendale"). Montana states that the agreement has expired as of its own terms and has not been revewed.

Any person desiring to be heard or to protest said filing should file a petition to intervene or protest with the Federal Energy Regulatory Commission, 825 North Capitol Street, Northeast, Washington, D.C. 20426, in accordance with §§ 1.8 and 1.10 of the Commission's Rules of Practice and Procedure (18 CFR 1.8, 1.10). All such petitions or protests should be filed on or before December 12, 1980. Protests will be considered by the Commission in determining the appropriate action to be taken, but will not serve to make protestants parties to the proceeding. Any person wishing to become a party must file a petition to

intervene. Copies of this application are on file with the Commission and are available for public inspection.

Kenneth F. Plumb,
Secretary.

[FR Doc. 80-36967 Filed 11-26-80; 8:45 am]
BILLING CODE 6450-85-M

[Docket No. ER81-118-000]

The Montana Power Co.; Filing

November 21, 1980.

The filing Company submits the following:

Take notice that The Montana Power Company ("Montana") on November 13, 1980, tendered for filing in accordance with Section 35 of the Commission's regulations, a Letter Agreement with the City of Burbank ("Burbank"). Montana states that this Letter Agreement provides for the sale of firm energy between Montana and Burbank.

Montana indicates that the proposed Letter Agreement increased revenues from jurisdictional sales by $454,111.45, based upon energy delivered from July 12, 1980, through August 31, 1980. Montana states that the rate for firm energy under this Letter Agreement was negotiated.

An effective date of July 12, 1980, is proposed and waiver of the Commission's requirements is therefore requested.

Montana also tendered for filing a Notice of Cancellation of Rate Schedule and all its supplements, an agreement for the sale of firm energy between Montana and the City of Burbank ("Burbank"). Montana states that the agreement has expired as of its own terms and has not been renewed.

Any person desiring to be heard or to protest said filing should file a petition to intervene or protest with the Federal Energy Regulatory Commission, 825 North Capitol Street, NE, Washington, D.C. 20426, in accordance with §§ 1.8 and 1.10 of the Commission's Rules of Practice and Procedure (18 CFR 1.8, 1.10). All such petitions or protests should be filed on or before December 12, 1980. Protests will be considered by the Commission in determining the appropriate action to be taken, but will not serve to make protestants parties to the proceeding. Any person wishing to become a party must file a petition to intervene. Copies of this application are on file with the Commission and are available for public inspection.

Kenneth F. Plumb,
Secretary.

[FR Doc. 80-36968 Filed 11-26-80; 8:45 am]
BILLING CODE 6450-85-M

ENVIRONMENTAL PROTECTION AGENCY

[OPP-180535; PH-FRL 1684-7]

California; Issuance of Specific Exemption for Carbaryl on Pomegranates

AGENCY: Environmental Protection Agency (EPA).

ACTION: Notice

SUMMARY: EPA has granted a specific exemption to the California Department of Food and Agriculture (hereafter referred to as the "Applicant") to use 28,000 pounds of carbaryl on 3,500 acres of pomegranates in California to control filbertworms. The specific exemption is issued under the Federal Insecticide, Fungicide, and Rodenticide Act.

DATE: The specific exemption expires on December 31, 1980.

FOR FURTHER INFORMATION CONTACT: Libby Welch, Registration Division (TS-767), Office of Pesticide Programs, Environmental Protection Agency, Rm. E-124, 401 M St., SW, Washington, D.C. 20460, (202-426-0223).

SUPPLEMENTARY INFORMATION: The filbertworm is a common pest in filberts and walnuts. This pest, however, is relatively new in pomegranates and has caused losses only in the past few years. Little is known of the life cycle of this pest in pomegranates. Currently only methomyl is registered for insecticidal use on pomegranates. It is registered for use against the omnivorous leafroller. According to the Applicant, its use on pomegranates has shown no effectiveness against the filbertworm.

Limited field work has been carried out for carbaryl on pomegranates. The Applicant reports that data indicate that it would be effective against the filbertworm. Carbaryl is currently registered for control of the filbertworm on walnuts and filberts; data indicate that it is effective in controlling the filbertworm on these crops.

The Applicant estimates a possible loss of $1.5 million from the filbertworm, if an effective program against it is not carried out.

The Applicant proposes to make a maximum of two applications of Sevin Sprayable using ground or air equipment. A 30-day pre-harvest interval will be observed.

EPA has determined that the proposed use of carbaryl should not result in residues in or on pomegranates in excess of 1.0 part per million (ppm). This level has been judged adequate to protect the public health. EPA has also determined that the proposed use should not present an unreasonable hazard to the environment.

After reviewing the application and other available information, EPA has determined that the criteria for an exemption have been met. Accordingly, the Applicant has been granted a specific exemption to use the pesticide noted above until December 31, 1980, to the extent and in the manner set forth in the application. The specific exemption is also subject to the following conditions:

1. The product Sevin Sprayable (carbaryl), manufactured by Union Carbide, EPA Reg. No. 1016-43, may be applied. If an unregistered label is used, it must contain the identical applicable precautions and restrictions which appear on the registered label.

2. Application rate will be four pounds of carbaryl per acre in 200-400 gallons of water by ground equipment and 50-100 gallons of water by air.

3. No more than two applications may be made per season. A thirty-day pre-harvest interval is imposed.

4. Applications will be by or under the supervision of State-certified applicators.

5. A maximum of 3,500 acres of pomegranates may be treated in California with a maximum usage of 28,000 pounds of carbaryl or 35,000 pounds of formulated product.

6. All applicable directions, restrictions, and precautions on the EPA-registered product label must be observed.

7. Pomegranates treated according to the above provisions should not have residues of carbaryl in excess of 1.0 ppm. Pomegranate with residues of carbaryl which do not exceed this level may enter into interstate commerce. The Food and Drug Administration, U.S. Department of Health and Human Services, has been notified of this action.

8. The EPA shall be immediately informed of any adverse effects to man or the environment resulting from the use of Sevin Sprayable in connection with this exemption.

9. The Applicant is responsible for insuring that all the provisions of this specific exemption are followed and must submit a report detailing the use of carbaryl and the results of this program by March 31, 1981.

(Sec. 18 as amended 92 Stat. 819; (7 U.S.C. 136)).

Dated: November 20, 1980.

Edwin L. Johnson,

Deputy Assistant Administrator for Pesticide Programs.

[FR Doc. 80-37011 Filed 11-26-80; 8:45 am]

BILLING CODE 6560-32-M

[OPTS-51172; TSH-FRL 1684-3]

Certain Chemicals, Premanufacture Notices

AGENCY: Environmental Protection Agency (EPA).

ACTION: Notice.

SUMMARY: Section 5(a)(1) of the Toxic Substances Control Act (TSCA) requires any person who intends to manufacture or import a new chemical substance to submit a premanufacture notice (PMN) to EPA at least 90 days before manufacture or import commences. Section 5(d)(2) requires EPA to publish in the Federal Register certain information about each PMN wthin 5 working days after receipt. This Notice announces receipt of two PMN's and provides a summary of each.

DATE: Written comments by December 22, 1980.

ADDRESS: Written comments to: Document Control Officer (TS-793), Management Support Division, Office of Pesticides and Toxic Substances, Environmental Protection Agency, Rm. E-447, 401 M St., SW., Washington, DC 20460, (202-755-8050).

FOR FURTHER INFORMATION CONTACT: Rachel S. Diamond, Chemical Control Division (TS-794), Office of Pesticides and Toxic Substances, Environmental Protection Agency, Rm. E-221, 401 M St., SW., Washington, DC 20460 (202-426-3980).

SUPPLEMENTARY INFORMATION: Section 5(a)(1) of TSCA [90 Stat. 2012 (15 U.S.C. 2604)], requires any person who intends to manufacture or import a new chemical substance to submit a PMN to EPA at least 90 days before manufacture or import commences. A "new" chemical substance is any substance that is not on the Inventory of existing substances compiled by EPA under section 8(b) of TSCA. EPA first published the Initial Inventory on June 1, 1979. Notices of avilability of the Inventory were published in the Federal Register of May 15, 1979 (44 FR 28588-Initial) and July 29, 1980 (45 FR 50444-Revised). The requirement to submit a PMN for new chemical substances manufactured or imported for commercial purposes became effective on July 1, 1979.

EPA has proposed premanufacture notification rules and forms in the Federal Register issues of January 10, 1979 (44 FR 2242) and October 16, 1979 (44 FR 59764). These regulations, however, are not yet in effect. Interested persons should consult the Agency's Interim Policy published in the Federal Register of May 15, 1979 (44 FR 28564) for guidance concening premanufacture notification requirements prior to the effective date of these rules anf forms. In particular, see page 28567 of the Interim Policy.

A PMN must include the information listed in section 5(d)(1) of TSCA. Under section 5(d)(2) EPA must publish in the Federal Register nonconfidential information on the identity and use(s) of the substance, as well as a description of any test data submitted under section 5(b). In addition, EPA has decided to publish a description of any test data submitted with the PMN and EPA will publish the identity of the submitter unless this information is claimed confidential.

Publication of the section 5(d)(2) notice is subject to section 14 concerning disclosure of confidential information. A company can claim confidentiality for any information submitted as part of a PMN. If the company claims confidentiality for the specific chemical identity or use(s) of the chemical, EPA encourages the submitter to provide a generic use description, a nonconfidential description of the potential exposures from use, and a generic name for the chemical. EPA will publish the generic name, the generic use(s), and the potential exposure descriptions in the Fedral Register.

If no generic use description or generic name is provided, EPA will develop one and after providing due notice to the PMN submitter, will publish an amended Federal Register notice. EPA immediately will review confidentiality claims for chemical identity, chemical use(s), the identity of the submitter, and for health and safety studies. If EPA determines that portions of this information are not entitled to confidential treatment, the Agency will publish an amended notice and will place the information in the public file, after notifying the submitter and complying with other applicable procedures.

After receipt, EPA has 90 days to review a PMN under section 5(a)(1). The section 5(d)(2) Federal Register notice indicates the date when the review period ends for each PMN. Under section 5(c), EPA may, for good cause, extend the review period for up to an additional 90 days. If EPA determines that an extension is necessary, it will publish a notice in the Federal Register.

Once the review period ends, the submitter may manufacture the substance unless EPA has imposed restrictions. When the submitter begins to manufacture the substance, he must report to EPA, and the Agency will add the substance to the Inventory. After the substance is added to the Inventory, any company may manufacture it without providing EPA notice under section 5(a)(1)(A).

Therefore, under the Toxic Substances Control Act, summaries of the data taken from the PMN's are published herein.

Interested persons may, on or before December 22, 1980, submit to the Document Control Officer (TS-793), Management Support Division, Office of Pesticides and Toxic Substances, Environmental Protection Agency, Rm. E-447, 401 M St., SW., Washington, DC 20460, written comments regarding these notices. Three copies of all comments shall be submitted, except that individuals may submit single copies of comments. The comments are to be identified with the document control number [OPTS-51172], and the specific PMN number. Comments received may be seen in the above office between 8:00 a.m. and 4:00 p.m., Monday through Friday, excluding legal holidays.

(Sec. 5, 90 Stat. 2012 (15 U.S.C. 2604))

Dated: November 19, 1980.

Warren R. Muir,

Deputy Assistant Administrator for Toxic Substances.

PMN 80-291.

The following summary is taken from data submitted by the manufacturer in the PMN.

Close of Review Period

January 21, 1981.

Manufacturer's Identity.

Claimed confidential business information. Generic information provided:

Annual sales—Between $100 million and $499,999,999.

Manfacturing site—East-north central U.S.

Standard Industrial Classification Code—285.

Specific Chemical Identity.

Polymer of: Expoxy resin, bisphenol A, paraformaldehyde, dibutylamine, and diethanolamine.

Use.

Claimed confidential business information. Generic information provided:

The submitter states that the substance will be used in an open use

that will release less than 50 kilograms (kg) of the substance to the environment per year and that the use of the substance may possibly involve potential exposure to the skin and eyes.

	Kilograms per year	
	Minimum	Maximum
First year	3,500	10,000
Second year	15,000	30,000
Third year	30,000	100,000

Physical/chemical properties	Polymer solution	Dried polymer
Solid content	63.9	
Specific gravity	1.03	1 05
Solubility in water		0.5% C. 20° C.
Number average molecular weight	1,400–1,430	
Weight average molecular weight	2,700–2,800	
Flash point (closed cup)	76° F	>200° F.
Percent free formaldehyde	0.7	
pKa	7.76	7.72
Elemental analysis (percent)		C=71.7
		H=8.1
		N=2.7
		O=17.5

Physical/chemical properties	Polymer solution	Dried polymer
Chemical oxygen demand (ugO/g)	2,200,000	

Toxicity of Raw Materials

Epoxy resin-Epon 829. The oral LD_{50} in rats is 10.2 g/kg. The dermal LD_{50} in rabbits is over 10.2 g/kg.

Bisphenol A. The oral LD_{50} in rats is in the range of 1–2 g/kg. Over exposure to the dust is irritating to the upper respiratory passages, and may cause sneezing.

Dibutylamine. The acute oral LD_{50} in rats is 500 mg/kg. The dermal LD_{50} in rabbits is 1,010 mg/kg. It causes severe skin and eye irritation.

Diethanolamine. The acute oral LD_{50} in rats is 1.82 g/kg. The undiluted liquid produces severe eye burn.

Paraformaldehyde. The acute oral LD_{50} in rats is more than 1.6 g/kg. The dermal LD_{50} in rabbits is 1.4 g/kg. It is considered to be moderately irritating to the eye. The Threshold Limit Value (TLV) is 3 parts per million (ppm).

Exposure

Activity and exposure route	Maximum number exposed	Maximum duration		Concentration (ppm)	
		Hours/day	Days/year	Average	Peak
Manufacture: Inhalation, Dermal	6	4	20	0–1	1–10
Processing: Inhalation, Dermal	8	4	20	-	0–1
Disposal: Inhalation, Dermal	5	8	2	0–1	1–10

Environmental Release/Disposal. The manufacturer states that less than 10 kg of the PMN substance will be released into the environment (air) per year during the manufacturing process; and that waste disposal (sludge) is by landfill.

PMN 80–292.

The following summary is taken from data submitted by the manufacturer in the PMN.

Close of Review Period. January 21, 1981.

Manufacturer's Identity. Claimed confidential business information.

Generic information provided:

Annual sales—Between $100 million and $500 million.

Manufacturing site—Mid-Atlantic region U.S.

Standard Industrial Classification Code—284.

Specific Chemical Identity. Claimed confidential business information. Generic name provided. Disubstituted carbopolycyclic derviative.

Use. Claimed confidential business information. Generic information provided: The manufacturer states that the substance will be used in an open use that will release less than 50 kilograms (kg) to the environment per year and that the use will involve exposure to commercial and chemical industrial employees for varying time periods with limited potential for skin and eye contact.

Production Estimates.

	Kilograms per year	
	Minimum	Maximum
1st year	1,000	4,000
2d year	3,000	7,000
3d year	6,000	12,000

Physical/Chemical Properties.

Boiling point—70–74° C at 3mm Hg.

Appearance—Colorless liquid.

Solubility—Infinite in fats and oils; very low in water (<<1%).

Toxicity Data.

Oral LD_{50} (rat)—Final report in preparation. (>5 g/kg).

Dermal LD_{50} (rat)—Final report in preparation. (>5 g/kg).

Skin irritation (guinea pig)—At 10% methanol, slight, reaction under full occlusion. At 5% in ethanol, no reaction under full occlusion.

Skin irritation (human)—Final report in preparation. At 5% in ethanol, no reaction under semi-occlusion.

Phototoxicity (in *vitro* yeast screen)—Not phototoxic at 1% in methanol, positive results at 10% in methanol are being investigated.

Sensitization (guinea pigs)—At 5% in ethanol under full occlusion (Buehler technique), 0 of 15 pigs reacted.

Sensitization (human)—Final report in preparation. At 5% in ethanol under semiocclusion (Draize-Shelanski technique), 0 of 53 reacted. Therefore, little chance exists for human sensitization at the expected 1% use level.

Exposure.

Activity and exposure route	Maximum number exposed	Maximum duration		Concentration (unit ppm)	
		Hours/day	Days/year	Average	Peak
Manufacture Inhalation, Dermal	10	Accidental contact only		0–1	>100
Processing Inhalation Dermal	10	do		0–1	>100
Use Inhalation, Dermal	10	do		0–1	>100
Disposal Inhalation, Dermal	10	do		0–1	>100

The manufacturer claims that concentrations in excess of 100 ppm would occur only during an accidential spill situation and that any consumer use of this material would result in a maximum consumer exposure of about 0.1 mg/kg/day.

Environmental Release/Disposal. The manufacturer states less than 10 kg of the PMN substance will be released to the environment per year and that waste products will be treated by an on-site effluent pre-treatment plant. Treated effluent discharges into a Regional Sewage Facility. Other wastes are disposed of by incineration.

[FR Doc. 80-37007 Filed 11-26-80; 8:45 am]

BILLING CODE 6560-03-M

[OPTS-51175; TSH FRL 1684-4]

Cyclohexane, 1,1'-Methylene Bis [4-Isocyanato-, Reaction Products With 1,3-Isobenzofurandione, Polymer With 1,6-Hexanediol, Alphahydro-Omega-Hydroxypolyoxy[1,4-Butanediyl] and (2-Hydroxyethyl)-1-Propenoate; Premanufacture Notice

AGENCY: Environmental Protection Agency.

ACTION: Notice.

SUMMARY: Section 5(a)(1) of the Toxic Substances Control Act (TSCA) requires any person who intends to manufacture or import a new chemical substance to submit a premanufacture notice (PMN) to EPA at least 90 days before manufacture or import commences. Section 5(d)(2) requires EPA to publish in the Federal Register certain information about each PMN within 5 working days after receipt. This Notice announces receipt of a PMN and provides a summary.

DATE: Written comments by December 26, 1980.

ADDRESS: Written comments to: Document Control Officer (TS-793), Office of Pesticides and Toxic Substances, Environmental Protection Agency, Rm. E-447, 401 M St., SW., Washington, D.C. 20460, (202-755-8050).

FOR FURTHER INFORMATION CONTACT: Rachel Diamond, Chemical Control Division (TS-794), Office of Pesticides and Toxic Substances, Environmental Protection Agency, Rm. E-221, 401 M St., SW., Washington, D.C. 20460, (202-426-3980).

SUPPLEMENTARY INFORMATION: Section 5(a)(1) of TSCA [90 Stat. 2012 (15 U.S.C. 2604)], requires any person who intends to manufacture or import a new chemical substance to submit a PMN to EPA at least 90 days before manufacture or import commences. A "new" chemical substance is any substance that is not on the Inventory of existing substances compiled by EPA under section 8(b) of TSCA. EPA first published the Initial Inventory on June 1, 1979. Notices of availability of the Inventory were published in the Federal Register of May 15, 1979 (44 FR 28558-Initial) and July 29, 1980 (45 FR 50544-Revised). The requirement to submit a PMN for new chemical substances manufactured or imported for commercial purposes became effective on July 1, 1979.

EPA has proposed premanufacture notification rules and forms in the Federal Register issues of January 10, 1979 (44 FR 2242) and October 16, 1979 (44 FR 59764). These regulations, however, are not yet in effect. Interested persons should consult the Agency's Interim Policy published in the Federal Register of May 15, 1979 (44 FR 28564) for guidance concerning premanufacture notification requirements prior to the effective date of these rules and forms. In particular, see page 28567 of the Interim Policy.

A PMN must include the information listed in section 5(d)(1) of TSCA. Under section 5(d)(2) EPA must publish in the Federal Register nonconfidential information on the identify and use(s) of the substance, as well as a description of any test data submitted under section 5(b). In addition, EPA has decided to publish a description of any test data submitted with the PMN and EPA will publish the identity of the submitter unless this information is claimed confidential.

Publication of the section 5(d)(2) notice is subject to section 14 concerning disclosure of confidential information. A company can claim confidentiality for any information submitted as part of a PMN. If the company claims confidentiality for the specific chemical identity or use(s) of the chemical, EPA encourages the submitter to provide a generic use description, a nonconfidential description of the potential exposures from use, and a generic name for the chemical. EPA will publish the generic name, the generic use(s), and the potential exposure descriptions in the Federal Register.

If no generic use description or generic name is provided, EPA will develop one and after providing due notice to the submitter, will publish an amended Federal Register notice. EPA immediately will review confidentiality claims for chemical identity, chemical use(s), the identity of the submitter, and for health and safety studies. If EPA determines that portions of this information are not entitled to confidential treatment, the Agency will publish an amended notice and will place the information in the public file, after notifying the submitter and complying with other applicable procedures.

After receipt, EPA has 90 days to review a PMN under section 5(a)(1). The section 5(d)(2) Federal Register notice indicates the date when the review period ends for each PMN. Under section 5(c), EPA may, for good cause, extend the review period for up to an additional 90 days. If EPA determines that an extension is necessary, it will publish a notice in the Federal Register.

Once the review period ends, the submitter may manufacture the substance unless EPA has imposed restrictions. When the submitter begins to manufacture the substance, he must report to EPA, and the Agency will add the substance to the Inventory. After the substance is added to the Inventory, any company may manufacture it without providing EPA notice under section 5(a)(1)(A).

Therefore, under the Toxic Substances Control Act, a summary of the data taken from the PMN is published herein.

Interested persons may, on or before December 26, 1980, submit to the Document Control Officer (TS-793), Management Support Division, Office of Pesticides and Toxic Substances, Environmental Protection Agency, Rm. E-447, 401 M St., SW., Washington, D.C. 20460, written comments regarding this notice. Three copies of all comments shall be submitted, except that individuals may submit single copies of comments. The comments are to be identified with the document control number "[OPTS-51175] and the PMN number. Comments received may be seen in the above office between 8:00 a.m. and 4:00 p.m., Monday through Friday, excluding legal holidays.

(Sec. 5, 90 Stat. 2012 (15 U.S.C. 2604))

Dated: November 19, 1980

Warren R. Muir,

Deputy Assistant Administrator for Toxic Substances.

PMN 80-301

The following summary is taken from data submitted by the manufacturer in the PMN.

Close of Review Period. January 25, 1981.

Manufacturer's Identity. Claimed confidential business information.

Generic information provided:

Annual sales—Between $100 million and $499,999,999.

Manufacturing site—Mid-Atlantic U.S.

Standard Industrial Classification Code—2891,

"Adhesives and Sealants".

Specific Chemical Identity. Cyclohexane, 1,1'-methylene bis[4-isocyanato-, reaction products with 1,3-isobenzofurandione, polymer with 1,6-hexanediol, alpha-hydro-omega-hydroxypolyoxy[1,4-butanediyl] and (2-hydroxyethyl)-2-propenoate.

Use. Coating.

Production Estimates.

First Year—50,000 lb.
Second year—100,000 lb.
Third year—125,000 lb.

Physical/Chemical Properties.

Composition—Blend of oligomers, monomers, and photoinitiators.
Appearance—Clear to slightly hazy liquids.
Solids content—100%.

Viscosity at 23°C (LVT Brookfield Viscometer No. 4 Spindle)—5,000±500 cps.
Flash point (setaflash)—>200° F.
Weight/gallon—9.22 lb (±0.15) (1.10 kg/l).

Toxicity Data. The manufacturer claims that there are no known toxicity data on the substance.

Exposure. During manufacture: 1–2 workers per shift, 2 shifts/batch, 10–25 batches/year.

During use. The manufacturer states that: The entire application and curing operation is ventilated; six workers may be exposed five days a week; potential dermal exposure could occur during transfer of the product containing the new substance from the shipping containers into the dispensing equipment and during cleanup operations.

Environmental Release/Disposal. The submitter states that no waste or byproduct is normally generated during manufacture and that scrap material and cleanup solvents are disposed in accordance with Resource Conservation and Recovery Act (RCRA) standards.

During use, the manufacturer states that environmental release would be negligible due to the low vapor pressure of the material; that waste generated during cleanup operations is disposed in compliance with local, state, and federal regulations.

[FR Doc. 80-37008 Filed 11-26-80; 8:45 am]
BILLING CODE 6560-31-M

[OPP-180529; PH-FRC 1684-8]

Idaho; Crisis Exemption for Tetraethyl Pyrophosphate

AGENCY: Environmental Protection Agency (EPA).

ACTION: Notice.

SUMMARY: EPA gives notice that on September 8, 1980, the Idaho Department of Agriculture (hereafter referred to as "Idaho") availed itself of a crisis exemption for the use of TEPP (tetraethyl pyrophosphate) on a maximum of 500 acres of hops in Canyon County, Idaho, for the control of the Bertha armyworm.

DATE: The crisis period ended on September 30, 1980.

FOR FURTHER INFORMATION CONTACT: Jack E. Housenger, Registration Division (TS-767), Office of Pesticide Programs, Environmental Protection Agency, Rm. E-107, 401 M St., SW., Washington, D.C. 20460, (202-426-0223).

SUPPLEMENTARY INFORMATION: According to Idaho, the Bertha armyworm is periodically a pest problem on several Idaho crops, but populations are cyclical in nature and outbreaks are not easily predicted. Idaho recently reported that a late season outbreak of Bertha armyworms reached a destructive peak in a number of Idaho hop yards, preventing the harvest of a mature crop. There is no registered pesticide or other means for control of this pest available prior to harvesting of the hop crop. Insecticides which are registered for late season application to hops include parathion, diazinon, malathion, and dibrom. Pre-harvest restrictions do not allow the application of parathion or diazinon products within 15 days and 14 days of harvest, respectively, and thus prevented the application of these materials in the short time before harvest. Malathion and dibrom products require pre-harvest intervals of 7–10 days and 4 days, respectively, but are not effective in controlling the Bertha armyworm, Idaho reported. Malathion has little effect on Bertha armyworms on hops with control rated at 10 percent or less, while dibrom has been shown to give only 10–20 percent control at best, according to Idaho. TEPP, which contains the active ingredient (a.i.) tetraethyl pyrophosphate, can provide effective late season insect control within 3 days of harvest of the hop crop, Idaho stated. According to Idaho, losses in income to affected hop growers, if the Bertha armyworm is not controlled, are estimated at nearly $2 million.

In order to prevent adverse environmental effects, the application of TEPP was subject to the following limitations:

1. A single application at the rate of 2 pounds a.i. per acre was to be made, resulting in the use of a maximum of 1,000 pounds a.i.

2. Applications were to be made only by State-licensed commercial aerial applicators.

3. No applications were to be made within 3 days of harvest.

4. All applicable directions, restrictions, and precautions on the EPA-registered label were to be followed.

Idaho was to monitor the aerial application of TEPP under this crisis exemption and was to inform EPA immediately of any adverse effects from this use.

(Sec. 18 as amended 92 Stat. 819; (7 U S C. 136))

Dated: November 20, 1980.

Edwin L. Johnson,

Deputy Assistant Administrator for Pesticide Programs.

[FR Doc. 80-37012 Filed 11-26-80; 8:45 am]
BILLING CODE 6560-32-M

[OPP-180527; PH-FRL 1684-6]

New Mexico and Texas; Issuance of Specific Exemptions for Monocrotophos on Field Corn

AGENCY: Environmental Protection Agency (EPA).

ACTION: Notice.

SUMMARY: EPA has granted specific exemptions to the New Mexico and Texas Departments of Agriculture (hereafter referred to as "New Mexico," "Texas," or the "Applicants") for the use of monocrotophos on a maximum of 106,000 acres of field corn in New Mexico and 500,000 acres of field corn in Texas to control Banks grass mites. The specific exemptions are issued under the Federal Insecticide, Fungicide, and Rodenticide Act.

DATES: New Mexico's specific exemption expires on October 31, 1980; Texas' specific exemption expires on November 30, 1980.

FOR FURTHER INFORMATION CONTACT: Jack E. Housenger, Registration Division (TS-767), Office of Pesticide Programs, Environmental Protection Agency, Rm. E-107, 401 M St. SW., Washington, D.C. 20460, (202-426-0223).

SUPPLEMENTARY INFORMATION: The Banks grass mite is a serious pest infesting field corn in New Mexico and Texas. It can cause severe desiccation of corn plants which can result in plant death before seed ear maturation. If the ears develop, the mites can cause desiccation of the corn kernels to the point that the crop cannot be harvested as a grain crop. The Banks grass mite populations increase rapidly under hot, dry weather conditions. According to the Applicants, the pest is very difficult to control. They claim that three registered pesticides, parathion, carbophenothion, and disulfoton, initially gave control of the mites but that resistance to these pesticides has developed. Four other pesticides, oxydemeton-methyl, dimethoate, phorate, and propargite, have also been reported by the Applicants to be ineffective. New Mexico anticipates losses of 10 to 30 bushels per acre, amounting to up to $78 per acre, without the use of Azodrin. Texas anticipates corn production would be reduced by 1,000 to 3,000 pounds per acre without

the use of Azodrin, amounting to a loss of from $65 to $150 per acre.

The Applicants proposed to use the product Azodrin 5 Water Miscible Insecticide, which contains the active ingredient (a.i.) monocrotophos, manufactured by Shell Chemical Co. New Mexico expected to use a maximum of 318,000 pounds a.i. to treat 106,000 acres. Texas planned to use 600,000 pounds a.i. to treat 500,000 acres.

EPA has determined that residue levels of monocrotophos should not exceed 0.05 part per million (ppm) in or on corn grain. This level has been judged adequate to protect the public health. EPA has imposed appropriate restrictions to prevent possible adverse effects on the environment.

After reviewing the applications and other available information, EPA has determined that the criteria for exemptions have been met. Accordingly, the Applicants have been granted specific exemptions to use the pesticide noted above until October 31, 1980, in New Mexico and until November 30, 1980, in Texas, in the manner and to the extent set forth in the applications. The specific exemptions are also subject to the following conditions:

1. The product Azodrin, EPA Reg. No. 201-157, may be applied.
2. Azodrin may be applied at a rate of 0.6 to 1.0 pound a.i. per acre.
3. A maximum of three applications of Azodrin may be made with a preharvest interval of 45 days.
4. A maximum of 106,000 acres of field corn may be treated in New Mexico; a maximum of 500,000 acres of field corn may be treated in Texas.
5. Applications will be made using a minimum of 3 gallons of water per acre with aerial equipment or a minimum of 10 gallons of water with ground equipment.
6. Applications will be made by or under the direct supervision of State-certified applicators.
7. Azodrin may be applied only to corn being grown for seed or grain.
8. Azodrin may not be used on corn grown for silage.
9. Animals may not be grazed in treated fields within 60 days of the last application.
10. Azodrin is toxic to aquatic organisms. It may not be applied directly to any body of water. It may not be applied where runoff is likely to occur. It may not be applied when weather conditions favor drift from treated areas. Care must be taken to prevent contamination of water by the cleaning of equipment or disposal of wastes.
11. Azodrin is highly toxic to bees exposed to direct treatment or residues on crops or weeds. It may not be applied or allowed to drift to weeds in bloom on which economically significant numbers of bees are actively foraging. Protective information may be obtained from each State's Cooperative Agricultural Extension Service.
12. Azodrin is highly toxic to avian and mammaliam species. Application may result in reduction of populations of these species.
13. The Applicants must contact the Office of Endangered Species (Federal) and State Fish and Game Agency personnel, prior to application, in order to determine if an endangered or threatened species is located in or adjacent to treated areas.
14. All applicable directions, restrictions, and precautions on the EPA-registered label must be adhered to.
15. Residue levels of Azodrin are not expected to exceed 0.05 ppm in corn grain. Corn grain with residues not exceeding this level may enter interstate commerce. The Food and Drug Administration, U.S. Department of Health and Human Services, has been notified of these actions.
16. Any adverse effects resulting from the use of Azodrin in connection with these specific exemptions must be immediately reported to the EPA.
17. A final report on the action taken under its specific exemption and the benefits derived must be submitted to the EPA by February 18, 1981, by each of the Applicants.

(Sec. 18 as amended 92 Stat. 819; (7 U.S.C. 136))

Dated: November 20, 1980.

Edwin L. Johnson,

Deputy Assistant Administrator for Pesticide Programs.

[FR Doc. 80-37010 Filed 11-26-80; 8:45 am]

BILLING CODE 6560-32-M

[OPP-180504; PH-FRC 1684-5]

Oklahoma; Crisis Exemption for Monocrotophos on Seed or Grain Corn

AGENCY: Environmental Protection Agency (EPA).

ACTION: Notice.

SUMMARY: EPA gives notice that the Oklahoma Department of Agriculture (hereafter referred to as "Oklahoma") availed itself of a crisis exemption for the use of Azodrin 5 (monocrotophos) to control Banks grass mite on approximately 40,000 acres of seed or grain corn in Oklahome.

DATE: The crisis exemption was initiated on July 22, 1980. The emergency ended on September 30, 1980.

FOR FURTHER INFORMATION CONTACT: Jack E. Housenger, Registration Division (TS-767), Office of Pesticide Programs, Environmental Protection Agency, Rm. E-107 401 M St., SW., Washington, D.C. 20460, (202-426-0223).

SUPPLEMENTARY INFORMATION: On July 22, 1980, Oklahoma notified EPA that it had initiated a crisis exemption for use of Azodrin 5, which contains the active ingredient (a.i.) monocrotophos, for control of Banks grass mite in the counties of Cimarron, Ellis, Harper, Texas, and Woodward, Oklahoma. According to Oklahoma, populations of Banks grass mites had proliferated rapidly, favored by extremely hot, dry weather, and the registered pesticides were not adequate to keep the infestations down to acceptable levels. Oklahoma reported that ethion, Thimet, Di-Syston, Meta-Systox, and dimethoate, all registered for this use, have been erratic in performance and did not prevent damaging populations from developing after treatment. Losses caused by the Banks grass mite could reach as much as $150 per acre, Oklahoma stated. Oklahoma stated that the sudden and explosive outbreak of Banks grass mite required immediate measures.

State-licensed and certified applicators made the applications on approximately 40,000 acres of seed or grain corn. A maximum of three applications were to be made at a rate of from 0.6 to 1.0 pound of the active ingredient in a minimum of three gallons of water by air or ten gallons of water by ground equipment per acre. Oklahoma State Department of Agriculture and Oklahoma State University Extension personnel were to monitor for proper applications and adverse effects. A 45-day pre-harvest interval was imposed. Treated fields were not to be harvested for ensilage and were not to be grazed by livestock for 60 days following application. Oklahoma anticipated that residues of monocrotophos in or on the treated grain should not exceen 0.05 part per million. EPA has determined that this residue level is adequate to protect the public health.

(Sec. 18 as amemded 92 Stat. 819; (7 U.S.C. 136))

Dated: November 20, 1980.

Edwin L. Johnson,

Deputy Assistant Administrator for Pesticide Programs.

[FR Doc. 80-37009 Filed 11-26-80; 8:45 am]

BILLING CODE 6560-32-M

[ER-FRL-1686-7]

Availability of Environmental Impact Statements

AGENCY: Office of Environmental Review (A-104) U.S. Environmental Protection Agency.

PURPOSE: This notice lists the Environmental Impact Statements (EISS) which have been officially filed with the EPA and distributed to Federal agencies and interested groups, organizations and individuals for review pursuant to the Council on Environmental Quality's Regulations (40 CFR Part 1506.9).

PERIOD COVERED: This notice includes EIS's filed during the week of November 17, 1980 to November 21, 1980.

REVIEW PERIODS: The 45-day review period for draft EIS's listed in this notice is calculated from November 28, 1980 and will end on January 12, 1981. The 30-day review period for final EIS's as calculated from November 28, 1980 will end on December 29, 1980.

EIS AVAILABILITY: To obtain a copy of an EIS listed in this notice you should contact the Federal agency which prepared the EIS. This notice will give a contact person for each Federal agency which has filed an EIS during the period covered by the notice. If a Federal agency does not have the EIS available upon request you may contact the Office of Environmental Review, EPA, for further information.

BACK COPIES OF EIS'S: Copies of EIS's previously filed with EPA or CEQ which are no longer available from the originating agency are available with charge from the following source: Information Resources Press, 1700 North Moore Street, Arlington, Virginia 22209 (703) 558-8270.

SUMMARY: This notice sets forth a list of EIS's filed with EPA during the week of November 17, 1980 to November 21, 1980. The Federal agency filing the EIS, the name, address, and telephone number of the Federal agency contact for copies of the EIS, the filing status of the EIS, the actual date the EIS was filed with EPA, the title of the EIS, the state(s) and county(ies) of the proposed action and a brief summary of the proposed Federal action and the Federal agency EIS number, if available, is listed in this notice. Commenting entities on draft EIS's are listed for final EIS's. All additional information relating to EIS's such as the time extensions or reductions of prescribed review periods, withdrawals, retractions, corrections or supplemental reports is also noticed under the appropriate agency.

FOR FURTHER INFORMATION CONTACT: Kathi L. Wilson, Office of Environmental Review, Environmental Protection Agency, 401 M Street, SW., Washington, DC 20460, (202) 245-3006.

Dated: November 25, 1980.

William N. Hedeman, Jr.,

Director, Office of Environmental Review (A-104).

DEPARTMENT OF AGRICULTURE

Contact: Mr. Barry Flamm, Director, Office of Environmental Quality, Office of the Secretary, U.S. Department of Agriculture, Room 412-A Admin. Building, Washington, D.C. 20250, (202) 447-3965.

SOIL CONSERVATION SERVICE

Draft

TONKAWA CREEK WATERSHED FLOOD PROTECTION: Caddo County, Oklahoma, November 18: Proposed is a flood protection plan for the Tonkawa Creek Watershed in Caddo County, Oklahoma. The plan would involve modification of 13 miles of channel. Several measures have been previously installed as part of the overall plan. The alternatives consider: (1) Construction of one additional floodwater retarding structure, (2) acquisition of flood plain, (3) zoning and flood insurance, and (4) no project. (EIS Order No. 800872.)

EXTENSION: The review period for the above EIS has been extended until January 19, 1981. (800872.)

U.S. ARMY CORPS OF ENGINEERS

Contact: Mr. Richard Makinen, Office of the Chief of Engineers, Attn: DAEN-CWR-P, Office of the Chief of Engineers, U.S. Army Corps of Engineers, 20 Massachusetts Avenue, Washington, D.C. 20314, (202) 272-0121.

Draft

1984 OLYMPIC GAMES, CONSTRUCTION AND REFURBISHMENT: Los Angeles County, California, November 21: Proposed is the refurbishment of existing facilities and the construction of new facilities within the City and County of Los Angeles, California, for utilization during the 1984 Olympic games. The new facilities would consist of a swimming stadium, velodrome and rowing course. Refurbishment and expansion would take place at the Los Angeles Memorial Coliseum and Sports Arena, Exposition Park, Jackie Robinson Stadium and the Whittier Narrows International Trap and Skeet Range. The cooperating agency is the State of California. (Los Angeles District) (EIS Order No. 800884.)

TYLER BEACH MAINTENANCE DREDGING, JAMES RIVER: Isle of Wight County, Virginia, November 17: Proposed is maintenance dredging of Tyler Beach which is located on the West Shore of the James River in Isle of Wight County, Virginia. The preferred alternative involves hydraulically pumping dredged material into a natural trough which is 31 feet deep. Other alternatives consider: (1) No action, and (2) placing dredged material in a previously used upland marsh. (Norfolk District) (EIS Order No. 800870).

Final

MAALAEA LIGHT-DRAFT HARBOR, ISLAND OF MAUI: Maui County, Hawaii, November 21: Proposed are navigation improvements for Maalaea Light-Draft Vessel Harbor in the County of Maui, island of Maui, Hawaii. Plan 1 includes: (1) a 620-foot long extension to the existing south breakwater, (2) addition of a 400-foot long revetted mole on the seaward side of the existing south breakwater, (3) a 610-foot long entrance channel, (4) a 12-foot deep turning basin, (5) a 50-foot wide, 720-foot long interior revetted mole, and (6) a 8-foot deep berthing area. Plan 2 and 3 are similar to plan 1 with slight modification, the cooperating agencies are the Fish and Wildlife Service and the National Marine Fisheries Service. (Honolulu District.) Comments made by: EPA, DOT, DOC, DOI, AHP, state agencies, groups (EIS Order No. 800887).

CEDAR RIVER RECREATIONAL HARBOR, J. W. WELLS SP: Menominee County, Michigan, November 18: Proposed are navigational improvements for the Cedar River Recreational Harbor within the J. W. Wells State Park, Menominee County, Michigan. The project would consist of: (1) Construction of a new east pier, (2) rehabilitation of the old west pier, (3) dredging of an entrance and inner channel with turning basin, (4) removal of the remnants of the old east pier, and (5) beach nourishment of the shoreline zone adjacent to the lakeward side of the proposed east pier. (Detroit District.) (Comments made by: DOI, EPA, DOC, HEW, DOI, FERC, state agencies (EIS Order No. 800875).

Final Supplement

HARRY S TRUMAN DAM, DOWNSTREAM MEASURES (FS-2): Benton County, Missouri, November 19: Proposed are downstream measures for the Harry S Truman Dam and Reservior located on the Osage River in Benton County, Missouri. The plan under consideration includes: (1) relocation of a water oriented recreational facility, including removal of middle bridge; (2) placement of a left bank levee from recreation facility to U.S. 65; (3) placement of a right bank levee including the island; and (4) acquisition of land behind each levee. This statement supplements final EIS, No. 730340, filed 2-28-73. The cooperating agencies are FWS, EPA, SCS and the Southwestern Power Administration. (Kansas City District.) Commentsmade by: DOI, DOT, USDA, DOE, state and local agencies, groups, individuals, and businesses (EIS Order No. 800878).

DEPARTMENT OF COMMERCE

Contact: Dr. Robert T. Miki, Acting Deputy Assistant Secretary for Regulatory Policy, Room 7614, Department of Commerce, Washington, D.C. 20230, (202) 377-2482.

NATIONAL OCEANIC AND ATMOSPHERIC ADMINISTRATION

Final

LOOE KEY NATIONAL MARINE SANCTUARY: Regulatory, Florida, November 21: Proposed are regulations implementing designation of waters at Looe Key, Florida as a National Marine Sanctuary.

The key is a submerged section of the Florida Reef tract in the Florida Keys and will consist of 5 square nautical miles of high seas water. The regulations would allow the possession and collection of coral and disturbance of historical and cultural resources, by permit only. They would prohibit: (1) spearfishing; (2) use of lobster traps; (3) use of wire fish traps; (4) anchoring on coral; and (5) discharge of polluted water, fish parts or chum. Comments made by: AHP, USAF, COE, EPA, FERC, HUD, DOI, DOT, state and local agencies, groups, individuals, and businesses (EIS Order No. 800885).

DEPARTMENT OF ENERGY

Contact: Dr. Robert Stern, Acting Director, NEPA Affairs Division, Department of Energy, Mail Station 4G-064, Forrestal Bldg., Washington, D.C. 20585, (202) 252-4600.

EXTENSION: Naval Oil Shale Reserves Development Options, published FR September 19, 1980—review extended from November 7, 1980 to January 2, 1980. (800693.)

EXTENSION: Anvil Points Oil Shale Facility, Garfield County, CO, published FR August 29, 1980—review extended from October 14, 1980 to November 24, 1980. (800629.)

ENVIRONMENTAL PROTECTION AGENCY

Contact: Ms. Norma Hughes, EPA Headquarters, Office of Water Programs Operation, Marine Protection Branch, 401 M Street S.W., Washington, D.C. 20460, (202) 472-2836.

Draft

SAN FRANCISCO CHANNEL DREDGED MATERIAL DISPOSAL: Pacific Ocean, California, November 20: Proposed is the Designation of disposal sites for material dredged from the San Francisco Channel bar. The proposed site is known as the Channel Bar Site, located 3 NMI from the coast. Other sites considered are: (1) the inshore site, 0.5 to 3 NMI from the coast; (2) the mid-shelf site, 15 NMI from the coast; and (3) the shelf-break site, 15 to 24 NMI from the coast. The cooperating agency is the Corps of Engineers. (EIS Order No. 800883.)

Final

NY BIGHT ACID WASTE DISPOSAL SITE DESIGNATION: New York, November 18: Proposed is the designation of the New York Bight acid waste disposal site for continuing use, which is used by 2 industries in the New Jersey area. The alternatives consider: (1) no action, (2) use of the existing site, and (3) use of the 106-mile chemical waste disposal site and the northern and southern areas near the Hudson Canyon. Comments made by: DOC, COE, HEW DOI, STAT, NSF, state agencies, groups, and businesses (EIS Order No. 800874).

Contact: Mr. Robert Mendoza, Environmental and Economic Impact Office, Region I, Environmental Protection Agency, JFK Federal Building, Boston, MA 02203 (617) 223-4635.

Draft

NANTUCKET WWT AND COLLECTION FACILITIES: Nantucket County, Massachusetts, November 21: Proposed is the upgrading of wastewater treatment and collection facilities for the Island of Nantucket in Nantucket County, Massachusetts. The preferred alternative involves upgrading the Nantucket and Siasconset filter beds for primary pretreatment and continued rapid infiltration, and comprehensive groundwater protection program. Also considered are 5 WWT alternatives for Nantucket center, 4 WWT alternatives for Siasconset Village and 6 structural and non-structural proposals for Madaket Village. (EIS Order No. 800882).

EXTENSION: The review period for the above EIS has been extended until January 19, 1981. (800882).

Contact: Mr. Eugene Wojcik, Region V, Environmental Protection Agency, 230 South Dearborn Street, Chicago, Illinois 60604 (312) 353-2157.

Final

OTTER TAIL LAKE WASTE TREATMENT SYSTEM, STUDY No. 5: Otter Tail County, Minnesota, November 21: Proposed is a wastewater treatment facility plan for the Otter Tail Lake area of Otter Tail County, Minnesota. The plan would involve: (1) replacement of holding tanks, (2) replacement of all cesspools with new on-site systems, (3) conversion of holding tanks to receive very low flows, (4) placement of new septic tank/soil absorption systems, (5) replacement of all defective or undersized septic tanks, (6) use of dosed mound systems, and (7) use of cluster systems. Comments made by: DOI, HEW, state and local agencies, individuals and businesses. (EIS Order No. 800886).

DEPARTMENT OF HUD

Contact: Mr. Richard H. Broun, Director, Office of Environmental Quality, Room 7274, Department of Housing and Urban Development, 451 7th Street, S.W., Washington D.C. 20410 (202) 755-6300.

Draft

PARKWOOD MEADOWS SUBDIVISION, MORTGAGE INSURANCE: Tulare County, California, November 21: Proposed is the issuance of HUD Home Mortgage Insurance for the Parkwood Meadows Residential Subdivision in Tulare County, California. The development would encompass 110 acres and consist of 265 single family homes and 334 duplex, triplex and appartment units. the development would also include an 8 acre park and a 3 arce shopping center. (HUD-RO-IX-1980-4D) (EIS Order No. 800881).

MENOKEN GOLF COURSE SUBDIVISION MORTGAGE INSURANCE: Montrose County, Colorado, November 17: Proposed is the issuance of mortgage insurance for the Menoken golf course subdivision located in Montrose County, Colorado. The development encompasses 562.82 acres and would contain approximately 1,430 dwelling units. The units would consist of single, detached and attached units. Also included in the subdivision would be a golf course, commercial area, firehouse site, school site, and open space. (HUD-R08-EIS-81-ID) (EIS Order No. 800871).

The following are community development block grant statements prepared and circulated directly by applicants pursuant to section 104(H) of the 1974 Housing and Community Development Act. Copies may be obtained from the Office of the appropriate local executive. Copies are not available from HUD.

Final Supplement

GALLERY II OF MARKET STREET EAST, UDAG, (FS-1): Philadelphia County, Pennsylvania, November 7: Proposed is the awarding of a UDAG to the City and County of Philadelphia, Pennsylvania. This statement addresses the following changes to the project: (1) Approximately 37,500 square feet of retail area would be added, (2) an office tower approximately 400,000 square feet would be added west of 11th street, and (3) elimination of the open court at 11th street and inclusion of the Reading Terminal Headhouse as the major entrance. This statement supplements final EIS, No. 791298, filed 12-7-79. Comments made by: EPA, state agencies (EIS Order No. 800888).

CORRECTION: The above EIS should have appeared in the report published in FR on November 17, 1980. The review period began on November 14, 1980 and will terminate on December 15, 1980. (800888).

DEPARTMENT OF INTERIOR

Contact: Mr. Bruce Blanchard, Director, Environmental Project Review, Room 4256 Interior Bldg., Department of the Interior, Washington, D.C. 20240 (202) 343-3891.

Office of Surface Mining

Final

UTAH SURFACE COAL MINING AND RECLAMATION OPERATION, Several counties in Utah, November 21: This document is a combined final EIS and petition evaluation concerning surface coal mining and reclamation operations in southern Utah. The purpose of this document is twofold: (1) To review and evaluate the allegations made in the petition to designate certain Federal lands as unsuitable for mining, and (2) To evaluate alternative actions that could be implemented by the Secretary of Interior. (OSM-EIS-4). Comments made by: USDA, DOE, HHS, DOI, DLAB, DOT, EAP, State and local agencies, groups, individuals and businesses. (EIS order No. 800889.)

WAIVER: The review period for the above EIS has been reduced and will terminate on December 15, 1980. (No. 800889).

Bureau of Land Management

Draft

1981OCS OIL AND GAS LEASE SALE NO. 59, MID-ATLANTIC, Atlantic Ocean, November 21: Proposed is OCS oil and gas lease sale No. 59 offshore of New York, New Jersey, Delaware, Maryland and Virginia. The sale involves 253 tracts, totaling 1,440,376 acres in average water depths or 295 to 7792 feet. The alternatives consider delay of sale, cancelling of sale and four deletion options. The deletion options include: (1) Protection of fisheries, (2) Protection of biological resources located in canyons, and (3) Two options protecting deepwater concerns. (DES-80-73). (EIS order No. 800880).

EXTENSION: The review period for the above EIS has been estended until January 28, 1981. (No. 800880).

BENTON-OWENS VALLEY LIVESTOCK GRAZING MGMT. PLAN, Inyo and Mono Counties Calif., November 19: Proposed is a grazing management plan for the Benton-Owens Valley planning units in Inyo and Mono Counties, California. The preferred alternative recommends that 18,462 aums be allocated to livestock and that 3, 154 aums be divided among wild horses, deer and elk. The alternatives consider: (1) No action, (2) Stocking by condition class, and (3) Livestock grazing. The cooperating agency is the State of California. (DES-80-72). (EIS order No. 800877).

EXTENSION: The review period for the above EIS has been extended until January 26, 1981. (No. 800877).

Bureau of Indian Affairs

Final Supplement

FOUR CORNERS-AMBROSIA-PAJARITO, TRANSMISSION, Several counties in New Mexico, November 18: Proposed is the granting of right-or-way for the construction of the Four Corners-Ambrosia-Pajarito 500 kV transmission line extending from San Juan County, through Mckinley and Valencia Counties, to Bernalillo County, New Mexico. The line would connect the Four Corners Power Plant to the Ambrosia Station and the proposed Pajorito Station. The length of the line would be approximately 173 miles. The alternatives consider; (1) No action, (2) Use or upgrading of existing lines, (3) Alternate routes, (4) Construction of a direct current line, and (5) Undergrounding. This statement supplements final EIS No. 771009, filed 8-18-77. (FES-80-48). Comments made by: DOI, USDA, DOC, HHS, AHP, HUD, DOE, EPA, State agencies, groups and businesses. (EIS order No. 800876).

DEPARTMENT OF TRANSPORTATION

Contact: Mr. Martin Convisser, Director, Office of Environment and Safety, U.S. Department of Transportation, 400 7th Street, S.W., Washington, D.C. 20590 (202) 426-4357.

FEDERAL AVIATION ADMINISTRATION

Draft

OLYMPIC REGIONAL AIRPORT DEVELOPMENT: Jefferson County, Washington, November 21: Proposed is the development of the Olymic Regional Airport in Jefferson County, Washington. This facility would replace the existing Jefferson County International Airport. The airport would encompass 200 acres and consist of a 3,700 foot runway, a taxiway, administration facilities, vehicle parking, and a transient aircraft apron. The alternatives consider: (1) Another site, (2) upgrading of the existing airport, and (3) no action. The cooperating agency is the State of Washington. (EIS Order No. 800879).

EXTENSION: The review period for the above EIS has been extended until January 20, 1981. (800879).

FEDERAL HIGHWAY ADMINISTRATION

Draft

U.S. 20/CORVALLIS-NEWPORT HWY., RECONSTRUCTION: Benton and Lincoln Counties, Oregon, November 18: Proposed is the reconstruction of U.S. 20/Corvallis-Newport Highway from the Coast Range Summit to Dudlee Hill in Benton and Lincoln Counties, Oregon. The reconstruction would extend for 5.4 miles consisting of two 12 foot travel lanes and 8 foot shoulders. The alternatives consider: (1) No build, and (2) three basic build alternatives each of which has a design option in Ellmaker State Park. The cooperating agency is the State of Oregon. (FHWA-OR-EIS-80-06-D) (EIS Order No. 800873).

[FR Doc. 80-37164 Filed 11-26-80; 8:45 am]

BILLING CODE 6560-37-M

[OPTS-51173; (TSH-FRL 1684-2)]

Certain Chemicals; Premanufacture Notices

AGENCY: Environmental Protection Agency (EPA).

ACTION: Notice.

SUMMARY: Section 5(a)(1) of the Toxic Substances Control Act (TSCA) requires any person who intends to manufacture or import a new chemical substance to submit a premanufacture notice (PMN) to EPA at least 90 days before manufacture or import commences. Section 5(d)(2) requires EPA to publish in the Federal Register certain information about each PMN within 5 working days after receipt. This Notice announces receipt of two PMN's and provides a summary of each.

DATE: Written comments by December 26, 1980.

ADDRESS: Written comments to: Document Control Officer (TS-793), Management Support Division, Office of Pesticides and Toxic Substances, Environmental Protection Agency, Rm. E-447, 401 M St. SW., Washington, D.C. 20460, (202-755-8050).

FOR FURTHER INFORMATION CONTACT: Carolyn Brown, Chemical Control Division (TS-794), Office of Pesticides and Toxic Substances, Environmental Protection Agency, Rm. E-221, 401 M St. SW., Washington, D.C. 20460, (202-426-3980).

SUPPLEMENTARY INFORMATION: Section 5(a)(1) of TSCA [90 Stat. 2012 (15 U.S C. 2604)], requires any person who intends to manufacture or import a new chemical substance to submit a PMN to EPA at least 90 days before manufacture or import commences. A "new" chemical substance is any substance that is not on the Inventory of existing substances compiled by EPA under section 8(b) of TSCA. EPA first published the Initial Inventory on June 1, 1979. Notices of availability of the Inventory were published in the Federal Register of May 15, 1979 (44 FR 28558-Initial) and July 29, 1980 (45 FR 50444-Revised). The requirement to submit a PMN for new chemical substances manufactured or imported for commercial purposes became effective on July 1, 1979.

EPA has proposed premanufacture notification rules and forms in the Federal Register issues of January 10, 1979 (44 FR 2242) and October 16, 1979 (44 FR 59764). These regulations, however, are not yet in effect. Interested persons should consult the Agency's Interim Policy published in the Federal Register of May 15, 1979 (44 FR 28564) for guidance concerning premanufacture notification requirements prior to the effective date of these rules and forms. In particular, see page 28567 of the Interim Policy.

A PMN must include the information listed in section 5(d)(1) of TSCA. Under section 5(d)(2) EPA must publish in the Federal Register nonconfidential information on the identity and use(s) of the substance, as well as a description of any test data submitted under section 5(d). In addition, EPA has decided to publish a description of any test data submitted with the PMN and EPA will publish the identity of the submitter unless this information is claimed confidential.

Publication of the section 5(d)(2) notice is subject to section 14 concerning disclosure of confidential information. A company can claim confidentiality for any information submitted as part of a PMN. If the company claims confidentiality for the specific chemical identity or use(s) of the chemical, EPA encourages the submitter to provide a generic use description, a nonconfidential description of the potential exposures from use, and a generic name for the chemical. EPA will publish the generic name, the generic use(s), and the potential exposure descriptions in the Federal Register.

If no generic use description or generic name is provided, EPA will develop one and after providing due notice to the PMN submitter, will publish an amended Federal Register notice. EPA immediately will review confidentiality claims for chemical identity, chemical use(s), the identity of the submitter, and for health and safety studies. If EPA determines that portions of this information are not entitled to confidential treatment, the Agency will publish an amended notice and will place the information in the public file, after notifying the submitter and complying with other applicable procedures.

After receipt, EPA has 90 days to review a PMN under section 5(a)(1). The

section 5(d)(2) Federal Register notice indicates the date when the review period ends for each PMN. Under section 5(c), EPA may, for good cause, extend the review period for up to an additional 90 days. If EPA determines that an extension is necessary, it will publish a notice in the Federal Register.

Once the review period ends, the submitter may manufacture the substance unless EPA has imposed restrictions. When the submitter begins to manfacture the substance, he must report to EPA, and the Agency will add the substance to the Inventory. After the substance is added to the Inventory, any company may manufacture it without providing EPA notice under section 5(a)(1)(A).

Therefore, under the Toxic Substances Control Act, summaries of the data taken from the PMN's are published herein.

Interested persons may, on or before December 26, 1980 submit to the Document Control Officer (TS-793), Management Support Division, Office of Pesticides and Toxic Substances, Environmental Protection Agency, Rm. E-447, 401 M St., SW, Washington, DC 20460, written comments regarding these notices. Three copies of all comments shall be submitted, except that individuals may submit single copies of comments. The comments are to be identified with the document control number "[OPTS-51173]" and the specific PMN number. Comments received may be seen in the above office between 8:00 a.m. and 4:00 p.m., Monday through Friday, excluding legal holidays.

(Sec. 5, 90 Stat. 2012 (15 U.S.C. 2604))

Dated: November 19, 1980.

Warren R. Muir,

Deputy Assistant Administrator for Toxic Substances.

PMN 80-293

The following summary is taken from data submitted by the manufacturer in the PMN.

Close of Review Period. January 25, 1981.

Manufacturer's Identity. Dow Corning Corp., P.O. Box 1767, Midland, MI 48640.

Specific Chemical Identity. Claimed confidential business information. Generic named provided: Dimethyl alkylmethyl silicone glycol copolymer.

Use. Claimed confidential business information. Generic information provided: Surfactant.

Production Estimates. Claimed confidential business information.

Physical/Chemical Properties

pH—6-7
Viscosity—100,000-200,000 cps
Solubility in water—Insoluble
Solubility in hydrocarbons—Soluble
Refractive index—1.4397
Residual SiH—< 10ppm
Color—Hazya green
Specific gravity—0.91
Non-volatiles—>95%

Toxicity Data

Acute oral toxicity, LD_{50} (rat)—>5,000mg/kg
Dermal toxicity, LD_{50} (rabbit)—>2,000 mg/kg
Eye irritation (rabbit)—Non-irritant
Skin irritation (rabbit)—Slight irritant
Ames *Salmonella* Assay—Non-mutagenic
Fish 96-hour LC_{50}—>100 ppm
Daphnia 48-hour LC_{50}—>100 ppm

Exposure. The manufacturer states that: (1) Minimum exposure to workers is expected during the manufacture of this chemical; (2) appropriate local exhaust ventilation will be used at the drum off site to control exposure; (3) a maximum of two persons could be exposed to this chemical during the drumming-off process; (4) the maximum duration of exposure could be 8 hours/day, 42 days/year at a maximum of 1-10 part(s) per million (ppm).

Environmental Release. Dow Corning Corp. states that there will be essentially no environmental release of the material to air, land or water.

PMN 80-294

The following summary is taken from data submitted by the manufacturer in the PMN.

Close or Review Period. January 25, 1981.

Manufacturer's Identity. Dow Corning Corp., P.O. Box 1767, Midland, MI 48640.

Specific Chemical Identity. Claimed confidential business information. Generic name provided: Siloxane, alkoxylated aminoalkyl.

Use. Claimed confidential business information. Generic information provided: Coupling agent.

Production Estimates. Claimed confidential business information.

Physical/Chemical Properties

pH—10-12
Viscosity—100-400 cps
Refractive index—1.460-1.470
Specific gravity—0.95-1.00
Odor—Pungent

Toxicity Data

Acute oral toxicity, LD_{50} (rat)—>5,000 mg/kg
Eye irritation (rabbit)— Severe irritant
Acute dermal toxicity, LD_{50} (rabbit)—>2,000 mg/kg
Primary skin irritation (rabbit)—Moderately irritating (occluded)
Ames *Salmonella* Assay—Non-mutagenic
Fish 96-hour, LC_{50}—4.2 ppm
Daphnia 48-hour, LC_{50}—47 ppm

Exposure. The manufacturer states that: (1) A maximum of two individuals could be exposed to the substance during the drumming-off process; (2) inhalation exposure should be insignificant due to the low vapor pressure of the material; and (3) exhaust ventilation will be used, if needed, to control methanol exposure during operation where the process is open to the atmosphere (drum-off, filter-change).

Environmental Release/Disposal. Dow Corning Corp. states that there will be essentially no environmental release of the substance to the air, land, or water during the manufacturing process and that the byproduct, methanol, will be recovered and recycled.

[FR Doc. 80-37000 Filed 11-26-80; 8:45 am]

BILLING CODE 6560-31-M

FEDERAL EMERGENCY MANAGEMENT AGENCY

Schedule for Awarding Senior Executive Service Bonuses

AGENCY: Federal Emergency Management Agency.

ACTION: Notice.

SUMMARY: Notice is hereby given of the schedule for awarding Senior Executive Service Bonuses.

DATE: November 28, 1980.

FOR FURTHER INFORMATION CONTACT: Russell Salter, Director, Employee and Labor Relations Division, FEMA, 1725 I Street NW., Attn: Office of Personnel, Washington, D.C. 20472, (703) 235-2454.

SCHEDULE: The Federal Emergency Management Agency intends to award Senior Executive Service bonuses for the performance appraisal period of July 1, 1979 through June 30, 1980. Payments are scheduled to be made by December 19, 1980.

Dated: November 21, 1980.

William L. Harding,

Acting General Counsel.

[FR Doc. 80-37043 Filed 11-26-80; 8:45 am]

BILLING CODE 6718-01-M

FEDERAL MARITIME COMMISSION

Agreement Filed

Notice is hereby given that the following agreement has been filed with the Commission for review and approval, if required, pursuant to section 15 of the Shipping Act, 1916, as amended (39 Stat. 733, 75 Stat. 763, 46 U.S.C. 814).

Interested parties may inspect and obtain a copy of the agreement at the Washington office of the Federal Maritime Commission, 1100 L Street N.W., Room 10423; or may inspect the agreement at the Field Offices located at New York, N.Y., New Orleans, Louisiana, San Francisco, California, and Old San Juan, Puerto Rico. Comments on such agreements, including requests for hearing, may be submitted to the Secretary, Federal Maritime Commission, Washington, D.C. 20573, on or before December 8, 1980. Any person desiring a hearing on the proposed agreement shall provide a clear and concise statement of the matters upon which they desire to adduce evidence. An allegation of discrimination or unfairness shall be accompanied by a statement describing the discrimination or unfairness with particularity. If a violation of the Act or detriment to the commerce of the United States is alleged, the statement shall set forth with particularity the acts and circumstances said to constitute such violation or detriment to commerce.

A copy of any such statement should also be forwarded to the party filing the agreement (as indicated hereinafter) and the statement should indicate that this has been done.

Agreement No. 10041-7.

Filing Party: Hopewell H. Darneille, III, Esquire, Sullivan & Beauregard, 1800 M Street N.W., Washington, D.C. 20036.

Summary: Agreement No. 10041-7 is a proposal by the parties to the U.S. Atlantic/Peru Pooling Agreement to extend the expiration date of the basic agreement for 90 days, through March 31, 1981. Additionally, a provision which permits the parties, in every pool year except the final pool year (1980), to consider pool earnings from the final yearly sailing as earnings for the next succeeding year, is being amended by allowing such action in the final pool year.

Dated: November 21, 1980.

By Order of the Federal Maritime Commission.

Francis C. Hurney,

Secretary.

[FR Doc 80-36986 Filed 11-26-80; 8 45am]

BILLING CODE 6730-01-M

Agreements Filed

The Federal Maritime Commission hereby gives notice that the following agreements have been filed with the Commissin for approval pursuant to section 15 of the Shipping Act, 1916, as amended (39 Stat. 733, 75 Stat. 763, 46 U.S.C. 814).

Interested parties may inspect and obtain a copy of each of the agreements and the justifications offered therefor at the Washington Office of the Federal Maritime Commission, 1100 L Street, N.W., Room 10218; or may inspect the agreements at the Field Offices located at New York, N.Y.; New Orleans, Lousiana; San Francisco, California; Chicago, Illinois; and San Juan, Puerto Rico. Interested parties may submit comments on each agreement, including requests for hearing, to the Secretary, Federal Maritime Commission, Washington, D.C. 20573, on or before December 18, 1980. Comments should include facts and arguments concerning the approval, modification, or disapproval of the proposed agreement. Comments shall discuss with particularity allegations that the agreement is unjustly discriminatory or unfair as between carriers, shippers, exporters, importers, or ports, or between exporters from the United States and their foreign competitors, or operates to the detriment of the commerce of the United States, or is contrary to the public interest, or is in violation of the Act.

A copy of any comments should also be forwarded to the party filing the agreements and the statement should indicate that this has been done.

Agreement No.: 5850-38.

Filing Parties: Howard A. Levy, Patricia E. Byrne, Attorneys for Agreement No. 5850, 17 Battery Place, Suite 727, New York, New York 10004.

Summary: Agreement No. 5850-38 would amend the basic agreement of the North Atlantic Westbound Freight Association to provide for the deposit of a financial guarantee by the member lines as security against their mutual obligations under the Agreement.

Agreement No.: 10126-2.

Filing Party: Mr. Kenneth N. Tice, Chester, Blackburn & Roder, Inc., Post Office Box 56—3037, AMF, Miami, Florida 33159.

Summary: Agreement No. 10126-2 would amend the basic agreement of the Florida/Curacao, Aruba and Bonaire Rate Agreement by (1) adding the name of Concorde Overseas Corporation d/b/a Concorde Line as a new participant, (2) correction of previous typographical errors and (3) correction of signature page providing for the participation of the new carrier.

Matson Navigation Company and Wholly-Owned Subsidiaries Matson Services Company and Matson Agencies, Inc.

Notice of Change of Incorporation of Parties Under Approved Agreements Subject to Section 15, Shipping Act, 1916

The Federal Maritime Commission has been notified by counsel of Matson Navigation Company that, for Hawaii State income tax purposes, Matson Navigation Company and its wholly-owned subsidiaries, Matson Terminals, Inc., Matson Services Company and Matson Agencies, Inc., will change their state of incorporation from California to Hawaii, effective close of business December 22, 1980. The reincorporation as Hawaii corporations will be accomplished by statutory merger of the California corporations into newly formed Hawaii corporations with the same names, except that "Inc." will appear in all the corporate names. Matson Navigation Company, Inc., will continue to do business using the names of Matson Navigation Company and Matson Agencies. The following is a list of the agreements involved:

Transshipment Agreements

80170	81030-B
80711	81030-C
80865	81030-D
80973	81030-E
81030-A	81030-F

Container Lease Agreements

9926	10020
9994	10322
9995	

Computer Services Agreement

10208

Agency Agreements

10053	10375
T-2964	10395
10358	

Terminal Lease Agreements

T-1953	T-3761
T-2171	T-3806
T-2523	T-3813PT-3813-A

Container Services Agreements

T-2649	T-3184
T-2650	T-3372
T-2702	T-3502
T-2729	T-3611
T-2737	T-3737
T-2772	T-9055
T-2774	T-9055-A
T-2851	T-3916

Equipment Interchange Agreement

T-2410

Equipment Lease Agreements

T-2749	T-2851-A
T-2749-A	T-2851-B
T-2749-B	T-3570

Preferential Berthing Assignment Agreements

T-3363	T-3363-A

Container Terminal Management Agreement

T-3561	T-3561-A

Purchasing Agent Agreements

T-3342	
T-3590	T-3590

Labor Loan Agreements

T-2636	T-2710

Domestic Commerce Agreements

Equipment Lease Agreement

DC-66

Transshipment Agreement

10372

Dated: November 21, 1980.

By Order of the Federal Maritime Commission.

Francis C. Hurney,

Secretary.

[FR Doc. 80-36988 filed 11-26-80; 8:45 am]

BILLING CODE 6730-01-M

[Agreement No. T-3931]

Availability of Finding of No Significant Impact

Upon completion of an environmental assessment, the Federal Maritime Commission's Office of Environmental Analysis (OEA) has determined that the Commission's decision on the agreement will not constitute a major Federal action significantly affecting the quality of the human environment within the meaning of the National Environmental Policy Act of 1969, 42 U.S.C. § 4321 *et seq.* and that preparation of an environmental impact statement is not required. For a description of this agreement, please refer to 45 FR 74995 (November 13, 1980).

The Finding of No Significant Impact (FONSI) will become final within 20 days unless a petition for review is filed pursuant to 46 CFR 547.6(b).

The FONSI and related environmental assessment are available for inspection on request from the Office of the Secretary, Room 11101, Federal Maritime Commission, Washington, D.C. 20573, telephone (202) 523-5725.

Francis C. Hurney,

Secretary.

[FR Doc. 80-36987 Filed 11-26-80; 8:45 am]

BILLING CODE 6730-01-M

[Independent Ocean Freight Forwarder License No. 274-R]

Eller & Company, Inc.; Order of Revocation

On August 14, 1980, Eller & Company, Inc., 701 S.E. 24th Street, Ft. Lauderdale, FL 33316, requested the Commission to revoke its Independent Ocean Freight Forwarder License No. 274-R.

Therefore, by virtue of authority vested in my by the Federal Maritime Commission as set forth in Manual of Orders, Commission Order No. 201.1 (Revised), section 5.01(c), dated August 8, 1977;

It is ordered, that Independent Ocean Freight Forwarder License No. 274-R issued to Eller & Company, Inc., be and is hereby revoked effective September 1, 1979, without prejudice to reapplication for a license in the future.

It is further ordered, that Independent Ocean Freight Forwarder License No. 274-R issued to Eller & Company, Inc., be returned to the Commission for cancellation.

It is further ordered, that a copy of this Order be published in the Federal Register and served upon Eller & Company, Inc.

Daniel J. Connors,

Director, Bureau of Certification and Licensing.

[FR Doc. 80-36989 Filed 11-26-80; 8:45 am]

BILLING CODE 6730-01-M

Manual of Orders; Organization and Functions of the Federal Maritime Commission

Commission Order 1 (Revised) was amended by Amendment No. 14 on July 21, 1980, to delegate authority to the Secretary, Federal Maritime Commission to prescribe a time limit of less than 20 days for responding to the notice of filing of agreements subject to environmental analysis. The text of that amendment follows:

"Section 8. Specific Authorities Delegated to the Secretary.

8.05 Authority to prescribe a time limit less than the 20 days provided in 46 CFR Part 547 for filing comments on (a) notices of intent to prepare an environmental assessment (547.5), (b) notices of finding of no significant impact (547.6)."

Richard J. Daschbach,

Chairman.

[FR Doc. 80-36985 Filed 11-26-80; 8:45 am]

BILLING CODE 6730-01-M

Security for the Protection of the Public; Financial Responsibility To Meet Liability Incurred for Death or Injury to Passengers or Other Persons on Voyages; Issuance of Certificate [Casualty]

Notice is hereby given that the following have been issued a Certificate of Financial Responsibility to Meet Liability Incurred for Death or Injury to Passengers or Other Persons on Voyages pursuant to the provisions of Section 2, Pub. L. 89-777 (80 Stat. 1356, 1357) and Federal Maritime Commission General Order 20, as amended (46 CFR 540):

Bahama Cruise Line, Inc. and Marpan Two, Inc. c/o Common Brothers USA, Ltd., 61 Broadway, New York, New York 10006.

Dated: November 24, 1980.

Francis C. Hurney,

Secretary.

[FR Doc. 80-36991 Filed 11-26-80; 8:45 am]

BILLING CODE 6730-01-M

Security for the Protection of the Public; Indemnification of Passengers for Nonperformance of Transportation; Issuance of Certificate (Performance)

Notice is hereby given that the following have been issued a Certificate of Financial Responsibility for Indemnification of Passengers for Nonperformance of Transportation pursuant to the provisions of Section 3, Pub. L. 89-777 (80 Stat. 1357, 1358) and Federal Maritime Commission General Order 20, as amended (46 CFR Part 540):

Bahama Cruise Line, Inc. and Common Brothers USA, Ltd., c/o Common Brothers USA, Ltd., 61 Broadway, New York, New York 10006.

Dated: November 24, 1980.

Francis C. Hurney,

Secretary.

[FR Doc. 80-36990 Filed 11-26-80; 8:45am]

BILLING CODE 6730-01-M

GENERAL SERVICES ADMINISTRATION

Automated Data and Telecommunications Service Computer Programming Language Compiler Validation; Meeting

November 19, 1980.

AGENCY: Automated Data and Telecommunications Service, General Services Administration.

ACTION: Notice of meeting.

SUMMARY: This notice sets forth the schedule and proposed agenda of a forthcoming meeting hosted by the Federal Compiler Testing Center to allow agencies and vendors to participate in a discussion regarding Computer Programming Language Compiler Validation.

DATE: December 17, 1980, 9:30 a.m. to 3:30 p.m.

ADDRESS: General Services Administration, 18th & F Streets NW., Room 3210, Washington, DC 20405.

FOR FURTHER INFORMATION CONTACT: George N. Baird, Director, Federal Compiler Testing Center, Automated Data and Telecommunications Service, General Services Administration, 5203 Leesburg Pike, Suite 1100, Falls Church, VA 22041, (703) 756-6153.

SUPPLEMENTARY INFORMATION: This meeting is being held to provide a forum for information interchange between the Federal Compiler Testing Center (FCTC), the agencies, and industry. The FCTC will present the future plans regarding Compiler Validation, new languages for which validation systems are being produced, and the future plans

of the FCTC. Included in the future plans will be the development of test and acceptance criteria/techniques for software, both developed inhouse and contracted out, and the use of software tools in the software development process.

There will be a period of open discussion that will provide members of the audience a chance to share their experiences in the validation process and suggest any changes they would like to see regarding the validation process.

Those planning to attend should notify the FCTC of their intention to do so and of the number of attendees that will represent them.

Francis A. McDonough,

Acting Commissioner, Automated Data and Telecommunications Service.

November 19, 1980.

[FR Doc. 80-37032 Filed 11-26-80; 8:45 am]

BILLING CODE 6820-25-M

Automated Data and Telecommunications Service Annual Schedules for Validating COBOL and FORTRAN Compilers

November 19, 1980.

AGENCY: Automated Data and Telecommunications Service, General Services Administration.

ACTION: Notice of intent.

SUMMARY: The Federal Property Management Regulations (see 41 CFR 101-36.1305-1) require that all COBOL Compilers brought into the Federal Government inventory and those used to develop computer programs for the Government when providing programming services must be validated on an annual basis. This includes COBOL Compilers used in providing services under the Teleprocessing Services Program (TSP) Schedule. The Federal Compiler Testing Center (FCTC) maintains the annual schedule for the validation of COBOL Compilers. The FCTC is in the process of updating that schedule for 1981 and is also establishing an annual schedule for FORTRAN Compilers in anticipation of the adoption of FORTRAN (X3.9-1978, American National Standard Programming Language FORTRAN) as a Federal Programming Language Standard.

FOR FURTHER INFORMATION CONTACT: George N. Baird, Director, Federal Compiler Testing Center, Automated Data and Telecommunications Service, General Services Administration, 5203 Leesburg Pike, Suite 1100, Falls Church, VA 22041, (703) 756-6153.

SUPPLEMENTARY INFORMATION: The Federal Compiler Testing Center is establishing the annual validation schedule for COBOL Compilers for CY81. FPMR 101-36.1305-1 "FIPS PUB 21-1, Federal Standard COBOL" requires that all COBOL Compilers that are to be offered to the Federal Government be validated on an annual basis. COBOL Compilers that have not been validated must have been submitted to the FCTC for validation in order to be eligible to be offered to the Federal Government.

A COBOL compiler that is on the FCTC annual validation schedule meets the requirement of having been "submitted for validation" as required by FPMR 101-36.1305-1 for the level of Federal Standard COBOL at which validation has been requested. A request that a COBOL compiler be included in the annual schedule for 1981 should be forwarded to the FCTC at the address shown above. A COBOL compiler which is on the annual schedule, has been validated, and appears on the FCTC Certified Compiler list can be offered to the Government at up to and including the level of Federal Standard COBOL at which the compiler was validated. A request to change the 1981 level of validation for a compiler on the annual schedule which was validated in 1980 must also be forwarded to the FCTC in order to meet the requirement of having been submitted for validation at a higher level of validation.

The COBOL compilers which are currently on the FCTC 1980 schedule will automatically be included in the 1981 schedule. Vendors who have a COBOL compiler on the schedule will be contacted directly in the next few weeks to find out if they want to remove any of their compilers from the schedule or to change the annual validation date for any of their compilers.

The FCTC currently validates FORTRAN 78 compilers at the subset level of the language. Current plans call for providing for the validation of the full FORTRAN 78 language by July of 1981. The annual FORTRAN validation schedule (unlike the COBOL validation schedule, which runs from January 1 to December 31) will run from July 1 to June 31 of the following year. An annual schedule for the validation of FORTRAN Compilers is being established. (Validations performed prior to July 1981 will be at the subset level of FORTRAN 78.) A request for a FORTRAN compiler to be included in the 1981 annual validation schedule for FORTRAN should be forwarded to the FCTC.

If there is more than one compiler that will be validated at the same location, it would be to the requestors' advantage, as well as the FCTC, to have them all validated during the same site visit by an FCTC staff member. Requests for additions to or modifications of the annual schedule should reach the FCTC by December 15, 1980. Requests to have a compiler placed on the annual schedule received after December 15, 1980, will be honored to the best of our ability. However, those compilers already scheduled will be given higher priority.

Requests for one-time validations will be accepted but with no guarantee as to the actual date the compiler will be validated. A request for a one-time validation does not fulfill the requirement of a compiler having been "submitted for validation" since a firm validation date cannot be established.

Please contact the FCTC for additional information and validation request forms.

Francis A. McDonough,

Acting Commissioner, Automated Data and Telecommunications Service.

November 19, 1980.

[FR Doc. 80-37033 Filed 11-26-80; 8:45 am]

BILLING CODE 6820-25-M

DEPARTMENT OF HEALTH AND HUMAN SERVICES

Food and Drug Administration

[Docket No. 80M-0430]

Ovutime, Inc.; Panel Recommendation on Petition for Reclassification

AGENCY: Food and Drug Administration.

ACTION: Notice.

SUMMARY: The Food and Drug Administration (FDA) is publishing for public comment the recommendation of the Obstetrics-Gynecology Device Section of the Obstetrics-Gynecology and Radiologic Devices Panel (the Panel) that the cervical mucus viscometer, Ovutime Tackiness Rheometer, be reclassified from class III (premarket approval) into class I (general controls). This recommendation was made after review of a reclassification petition filed by Ovutime, Inc., Newton, MA 02153. After reviewing the Panel recommendation and any public comments received, the agency will approve or deny the reclassification petition by order in the form of a letter to the petitioner. The agency's decision on this reclassification petition will be announced in the Federal Register.

DATE: Comments by December 29, 1980.

ADDRESS: Written comments to the Dockets Management Branch (formerly the Hearing Clerk's office) (HFA-305), Food and Drug Administration, Rm.

4–62, 5600 Fishers Lane, Rockville, MD 20857.

FOR FURTHER INFORMATION CONTACT: Lillian Yin, Bureau of Medical Devices (HFK–470), Food and Drug Administration, 8757 Georgia Ave., Silver Spring, MD 20910, 301–427–7555.

SUPPLEMENTARY INFORMATION: On October 27, 1978, Ovutime, Inc., Newton, MA 02158, submitted to FDA a premarket notification under section 510(k) of the Federal Food, Drug, and Cosmetic Act (the act) (21 U.S.C. 360(k)), stating that it intended to market a device the manufacture calls "Ovutime Tackiness Rheometer." After reviewing the information in the premarket notification, FDA determined that the device is neither substantially equivalent to any device that was in commercial distribution before May 28, 1976, nor is the device substantially equivalent to a device that has been placed in commercial distribution since that date, and subsequently reclassified. Accordingly, the device is automatically classified into class III under section 513(f)(1) of the act (21 U.S.C. 360c(f)(1)).

Under section 515(a)(2) of the act (21 U.S.C. 360e(a)(2)), before a device that is in class III because of section 513(f)(1) of the act can be marketed, it must either be reclassified under section 513(f)(2) or have an approval of an application for premarket approval under section 515 of the act (21 U.S.C. 360e), unless there is in effect for the device an investigational device exemption under section 520(g) of the act (21 U.S.C. 360j(g)).

On February 1, 1980, Ovutime, Inc., submitted to FDA a reclassification petition for the device under section 513(f)(2) of the act, which requires FDA to refer a reclassification petition to the appropriate classification panel and to receive a recommendation on whether to approve or deny the petition. On June 2, 1980, the Obstetrics-Gynecology Device Section of the Obstetrics-Gynecology and Radiologic Devices Panel reviewed the petition and recommended that the device be reclassified into class I.

To determine the proper classification of the device, the Panel considered the criteria specified in section 513(a)(1) of the act. For the purpose of classification, the Panel assigned to this generic type device the name "cervical mucus viscometer" and described this type of device as a general medical device that is used by physicians to measure the relative viscoelasticity of cervical mucus. Relative viscoelasticity measurement may be used as a physiologic indication in the determination of ovulation time, as well as an indication of the penetrability of cervical mucus to motile sperm. This measurement is an adjunct in the evaluation of female patients experiencing difficulty in becoming pregnant.

Summary of the Reasons for the Recommendation

The Panel gave the following reasons in support of its recommendation on reclassification:

1. The device is not of substantial importance in preventing impairment of human health and does not present a potential for unreasonable risk of illness or injury.
2. The device is not an implant and is neither life-sustaining nor life-supporting.
3. General controls are sufficient to provide reasonable assurance of the safety and effectiveness of the device.

Summary of Data on Which the Recommendation is Based

The Panel based its recommendation on the performance characteristics of the device. Product labeling includes detailed intruction for use. Several clinical studies were conducted to demonstrate various aspects of effectiveness. These studies, as well as published literature describing the current understanding of the physiology of cervical mucus, serve as the data base for the Panel recommendation.

1. The rheological properties of the cervical mucus show marked variation during the normal menstrual cycle. In the early proliferative and late luteal phase there is a low rate of secretion of a highly viscous mucus. This is in contrast with the copious secetion of a thin, clear, less viscous mucus at mid-cycle. These changes relate to the dominant ovarian hormone at the time (Ref. *1*). The ability of sperm to traverse the cervix and fertilize the ovum is dependent upon the receptibility of the cervical mucus (Ref. *2*). A thin watery cervical mucus is more receptive to sperm transport than a thick viscous mucus. Hence a viscoelasticity measurement may be useful to clinicians who evaluate patients with fertility difficulties.

2. Clinical data obtained from clinical studies conducted by Ovutime, Inc. were presented to demonstrate that the device can measure cervical mucus viscoelasticity on a relative scale and that the viscoelasticity adequately correlates with ovulation as well as sperm penetration into the cervical mucus. When the Ovutime Tackiness Rheometer was used as an adjunct in the treatment of chronic infertility, good results were obtained.

Risks to Health

The Panel did not identify any risks to health associated with the use of the Ovutime Tackiness Rheometer.

Additional Findings

This device may be used only in the treatment of fertility dysfunction. The labeling of the device shall include a disclaimer of its use for contraceptive purposes. Further, the labeling of the device shall include a statement to caution the user concerning the concomitant use of hormone therapy.

References

1. Elstein, Max, and Dennis V. Parke, eds., *Mucus in Health and Disease*, Plenum Press, New York, 1977.
2. Blasco, Louis, and Edward E. Wallach, "When Cervical Factors Cause Infertility," *Contemporary OB/GYN*, 15:125–136, 1980.

Interested persons may, on or before December 29, 1980, submit to the Dockets Management Branch (formerly the Hearing Clerk's office) (HFA–305), Food and Drug Administration, Rm. 4–62, 5600 Fishers Lane, Rockville, MD 20857, written comments on this recommendation. Four copies of any comments are to be submitted, except that individuals may submit one copy. Comments are to be identified with the name of the device and the docket number found in brackets in the heading of this document. Received comments may be seen in the office above between 9 a.m. and 4 p.m., Monday through Friday.

Dated: November 20, 1980.

William F. Randolph,
Acting Associate Commissioner for Regulatory Affairs.

[FR Doc. 80-36948 Filed 11-26-80; 8:45 am]
BILLING CODE 4110-03-M

Public Advisory Committees; Request for Nominations for Voting Members

AGENCY: Food and Drug Administration.

ACTION: Notice.

SUMMARY: The Food and Drug Administration (FDA) requests nominations for voting members to serve on the Anti-Infective Drugs Advisory Committee in the Bureau of Drugs. A notice of establishment of this committee appears elsewhere in this issue of the Federal Register.

DATE: Nominations should be received by January 27, 1981.

ADDRESS: All nominations for membership except for consumer positions must be sent to: Mary Bruch, Bureau of Drugs (HFD–140), Food and Drug Administration, 5600 Fishers Lane, Rockville, MD 20857.

Nominations for consumer positions must be sent to: Naomi Kulakow, Office of Consumer Affairs (HFE-40), Food and Drug Administration, 5600 Fishers Lane, Rockville, MD 20857.

SUPPLEMENTARY INFORMATION: FDA requests nominations for voting members on the Anti-Infective Drugs Advisory Committee. The function of the committee is to review and evaluate available data concerning the safety and effectiveness of marketed and investigational prescription drug products for use in the treatment of infectious diseases and make appropriate recommendations to the Commissioner of Food and Drugs. The Committee will have a total of 11 members.

Criteria for Members Other Than Consumer Member

Persons nominated for membership, except for consumer positions, shall have adequately diversified experience appropriate to the work of the committee in such fields as medicine, infectious diseases, microbiology, pediatrics, statistics, and related specialties. The specialized training and experience necessary to qualify the nominee as an expert suitable for appointment is subject to review, but may include experience in medical practice, teaching, and/or research relevant to the field of activity of the committee. The term of office is 4 years, except that initial appointments will be staggered to provide for an orderly rotation of membership.

Criteria for Consumer Member

FDA will place one full voting member on the committee to represent the consumer position. Consumer members are recommended by a consortium of nine consumer organizations which has the responsibility of screening, interviewing, and recommending consumer representatives for all of FDA's technical advisory committees. Candidates will be reviewed and rated according to the following criteria, as demonstrated by experience or credentials:

—established link to consumer/community-based organizations
—ability to communicate, orally or in writing
—ability to make decisions
—leadership capacity analytical skills
—interpersonal skills
—ability to follow through and to be accountable to a consumer constituency or organization
—technical experience or understanding, as required by the individual committee

As these criteria suggest, FDA seeks candidates who are aware of the consumer impact of committee issues, and who also possess enough technical background to understand the committee's work. This would involve, for example, understanding of research design, ability to analyze and [illegible] to discuss the benefits [illegible] safety and efficacy of the products under review. The term [illegible] for consumer representative [illegible] Drugs advisory committees [illegible] years.

Nomination Procedure

Any interested person [illegible] one or more qualified persons for membership on the advisory committee. Nominations shall state that the nominee is aware of the nomination, is willing to serve as a member of the advisory committee, and appears to have no conflict of interest that would preclude committee membership. Potential candidates will be asked by FDA to provide detailed information concerning such matters as financial holdings, consultancies, and research grants or contracts in order to permit evaluation of possible sources of conflict of interest.

FDA has a special interest in assuring that women, minority groups, and the physically handicapped are adequately represented on advisory committees and therefore extends particular encouragement to nominations for appropriately qualified female, minority, and physically handicapped candidates.

This notice is issued under the Federal Advisory Committee Act (Pub. L. 92-463, 86 Stat. 770-776 (5 U.S.C. App. I)) and 21 CFR Part 14, relating to advisory committees.

Dated: November 20, 1980.

William F. Randolph,

Acting Associate Commissioner for Regulatory Affairs

[FR Doc. [illegible]]

BILLING CODE 4110-03-M

Public Advisory Committees; Request for Nominations for Voting Members

AGENCY: Food and Drug Administration.

ACTION: Notice.

SUMMARY: The Food and Drug Administration (FDA) requests nominations for voting members to serve on the Ophthalmic Drugs Advisory Committee in the Bureau of Drugs. A notice of establishment of this committee appears elsewhere in this issue of the Federal Register.

DATE: Nominations should be received by January 27, 1981.

ADDRESS: All nominations for membership except for consumer positions must be sent to: Mary Bruch, Bureau of Drugs (HFD-140), Food and Drug Administration, 5600 Fishers Lane, Rockville, MD 20857.

Nominations for consumer positions must be sent to: Naomi Kulakow, Office of Consumer Affairs (HFE-40), Food and Drug Administration, 5600 Fishers Lane, Rockville, MD 20857.

SUPPLEMENTARY INFORMATION: FDA requests nominations for voting members on the Ophthalmic Drugs Advisory Committee. The function of the committee is to review and evaluate available data concerning the safety and effectiveness of marketed and investigational prescription drug products for use in the treatment of ocular diseases and make appropriate recommendations to the Commissioner of Food and Drugs. The Committee will have a total of 11 members.

Criteria for Members Other Than Consumer Member

Persons nominated for membership, except for consumer positions, shall have adequately diversified experience appropriate to the work of the committee in such fields as medicine, statistics, and related specialties. The specialized training and experience necessary to qualify the nominee as an expert suitable for appointment is subject to review, but may include experience in medical practice, teaching, and/or research relevant to the field of activity of the committee. The term of office is 4 years, except that initial appointments will be staggered to provide for an orderly rotation of membership.

Criteria for Consumer Member

FDA will place one full voting member on the committee to represent the consumer position. Consumer members are recommended by a consortium of nine consumer organizations which has the responsibility of screening, interviewing, and recommending consumer representatives for all of FDA's technical advisory committees. Candidates will be reviewed and rated according to the following criteria, as demonstrated by experience or credentials:

—established link to consumer/community-based organizations
—ability to communicate, orally or in writing
—ability to make decisions
—leadership capacity
—analytical skills
—interpersonal skills

—ability to follow through and to be accountable to a consumer constituency or organization
—technical experience or understanding, as required by the individual committee

As these criteria suggest, FDA seeks candidates who are aware of the consumer impact of committee issues, and who also possess enough technical background to understand the committee's work. This would involve, for example, understanding of research design; ability to analyze data; ability to discuss the benefits versus risks, and the safety and efficacy of the products under review. The term of office for consumer representatives on Bureau of Drugs advisory committees is 2 years.

Nomination Procedure

Any interested person may nominate one or more qualified persons for membership on the advisory committee. Nominations shall state that the nominee is aware of the nomination, is willing to serve as a member of the advisory committee, and appears to have no conflict of interest that woud preclude committee membership. Potential candidates will be asked by FDA to provide detailed information concerning such matters as financial holdings, consultancies, and research grants or contracts in order to permit evaluation of possible sources of conflict of interest.

FDA has a special interest in assuring that women, minority groups, and the physically handicapped are adequately represented on advisory committees and therefore extends particular encouragement to nominations for appropriately qualified female, minority, and physically handicapped candidates.

This notice is issued under the Federal Advisory Committee Act (Pub. L. 92–463, 86 Stat. 770.776 (5 U.S.C. App., I)) and 21 CFR Part 14, relating to advisory committees.

Dated: November 20, 1980.

William F. Randolph,

Acting Associate Commissioner for Regulatory Affairs.

[FR Doc. 80-36946 Filed 11-26-80; 8:45 am]

BILLING CODE 4110-03-M

Public Advisory Committees; Request for Nominations for Voting Members

AGENCY: Food and Drug Administration.

ACTION: Notice.

SUMMARY: The Food and Drug Administration (FDA) requests nominations for voting members to serve on the Dermatologic Drugs Advisory Committee in the Bureau of Drugs. A notice of establishment of this committee appears elsewhere in this issue of the Federal Register.

DATE: Nominations should be received by January 27, 1981.

ADDRESS: All nominations for membership except for consumer positions must be sent to: Mary Bruch, Bureau of Drugs (HFD–140), Food and Drug Administration, 5600 Fishers Lane, Rockville, MD 20857.

Nominations for consumer positions must be sent to: Naomi Kulakow, Office of Consumer Affairs (HFE–40), Food and Drug Administration, 5600 Fishers Lane, Rockville, MD 20857.

SUPPLEMENTARY INFORMATION: FDA requests nominations for voting members on the Dermatologic Drugs Advisory Committee. The function of the committee is to review and evaluate available data concerning the safety and effectiveness of marketed and investigational prescription drug products for use in the treatment of dermatologic diseases and make appropriate recommendations to the Commissioner of Food and Drugs. The Committee will have a total of 11 members.

Criteria for Members Other Than Consumer Member

Persons nominated for membership, except for consumer positions, shall have adequately diversified experience appropriate to the work of the committee in such fields as medicine, dermatology, statistics, and related specialties. The specialized training and experience necessary to qualify the nominee as an expert suitable for appointment is subject to review, but may include experience in medical practice, teaching, and/or research relevant to the field of activity of the committee. The term of office is 4 years, except that initial appointments will be staggered to provide for an orderly rotation of membership.

Criteria for Consumer Member

FDA will place one full voting member on the committee to represent the consumer position. Consumer members are recommended by a consortium of nine consumer organizations which has the responsibility of screening, interviewing, and recommending consumer representatives for all of FDA's technical advisory committees. Candidates will be reviewed and rated according to the following criteria, as demonstrated by experience or credentials:

—established link to consumer/community-based organizations
—ability to communicate, orally or in writing
—ability to make decisions
—leadership capacity
—analytical skills
—interpersonal skills
—ability to follow through and to be accountable to a consumer constituency or organization
—technical experience or understanding, as required by the individual committee.

As these criteria suggest, FDA seeks candidates who are aware of the consumer impact of committee issues, and who also possess enough technical background to understand the committee's work. This would involve, for example, understanding of research design; ability to analyze data; ability to discuss the benefits versus risks, and the safety and efficacy of the products under review. The term of office for consumer representatives on Bureau of Drugs advisory committees is 2 years.

Nomination Procedure

Any interested person may nominate one or more qualified persons for membership on the advisory committee. Nominations shall state that the nominee is aware of the nomination, is willing to serve as a member of the advisory committee, and appears to have no conflict of interest that would preclude committee membership. Potential candidates will be asked by FDA to provide detailed information concerning such matters as financial holdings, consultancies, and research grants or contracts in order to permit evaluation of possible sources of conflict of interest.

FDA has a special interest in assuring that women, minority groups, and the physically handicapped are adequately represented on advisory committees and therefore extends particular encouragement to nominations for appropriately qualified female, minority, and physically handicapped candidates.This notice is issued under the Federal Advisory Committee Act (Pub. L. 92–463, 86 Stat. 770–776 (5 U.S.C. App. I)) and 21 CFR Part 14, relating to advisory committees.

Dated: November 20, 1980.

William F. Randolph,

Acting Associate Commissioner for Regulatory Affairs.

[FR Doc. 80-36949 Filed 11-26-80; 8:45 am]

BILLING CODE 4110-03-M

Board of Tea Experts; Rechartering

AGENCY: Food and Drug Administration.

ACTION: Under the Federal Advisory Committee Act of October 6, 1972 (Pub.

L. 92–463, 86 Stat. 770–776 (5 U.S.C. App. I)), the Food and Drug Administration announces the rechartering of the Board of Tea Experts by the Commissioner of Food and Drugs for an additional period of 2 years beyond January 3, 1981. The charter for this Committee will expire January 3, 1983.

FOR FURTHER INFORMATION CONTACT: Richard L. Schmidt, Committee Management Office (HFA–306), Food and Drug Administration, 5600 Fishers Lane, Rockville, MD 20857, 301–443–2765.

Dated: November 20, 1980.

William F. Randolph,

Acting Associate Commissioner for Regulatory Affairs.

[FR Doc. 80–36791 Filed 11–25–80 8 45 am]

BILLING CODE 4110–03–M

Consumer Participation; Open Meeting

AGENCY: Food and Drug Administration.

ACTION: Notice.

SUMMARY: The Food and Drug Administration (FDA) announces a forthcoming consumer exchange meeting to be chaired by George J. Gerstenberg, District Director, New York District Office, Brooklyn, NY.

DATE: The meeting will be held at 10 a.m., Tuesday, December 9, 1980.

ADDRESS: The meeting will be held at 26 Federal Plaza, Rm. 305A, New York City, NY.

FOR FURTHER INFORMATION CONTACT: Alicia Martinez, Consumer Affairs Officer, Food and Drug Administration, 850 Third Ave., Brooklyn, NY 11232, 212–965–5043.

SUPPLEMENTARY INFORMATION: The purpose of this meeting is to encourage dialogue between consumers and FDA officials, to identify and set priorities for current and future health concerns, to enhance relationships between local consumers and FDA's New York District Office, and to contribute to the agency's policymaking decisions on vital issues.

Dated: November 20, 1980.

William F. Randolph,

Acting Associate Commissioner for Regulatory Affairs.

[FR Doc. 80–36788 Filed 11–26–80 8.45 am]

BILLING CODE 4110–03–M

Consumer Participation; Open Meeting

AGENCY: Food and Drug Administration.

ACTION: Notice.

SUMMARY: The Food and Drug Administration (FDA) announces a forthcoming consumer exchange meeting to be chaired by Alan L. Hoeting, District Director, Detroit District Office, Detroit, MI.

DATE: The meeting will be held at 9:30 a.m., Tuesday, December 9, 1980.

ADDRESS: The meeting will be held at the George Potter Larrick Bldg., Conference Rm., 1560 E. Jefferson, Detroit, MI 48207.

FOR FURTHER INFORMATION CONTACT: Diane M. Place, Consumer Affairs Officer, Food and Drug Administration, 1560 E. Jefferson, Detroit, MI 48207, 313–226–6260.

SUPPLEMENTARY INFORMATION: The purpose of this meeting is to encourage dialogue between consumers and FDA officials, to identify and set priorities for current and future health concerns, to enhance relationships between local consumers and FDA's Detroit District Office, and to contribute to the agency's policymaking decisions on vital issues.

Dated November 20, 1980

William F. Randolph,

Acting Associate Commissioner for Regulatory Affairs

[FR Doc. [illegible]]

BILLING CODE 4110–03–M

[DOCKET NO. 80N–0429]

Pembroke Elevator and Seed Co., Applications for Animal Feeds Bearing or Containing New Animal Drugs; Opportunity for Hearing

AGENCY: Food and Drug Administration.

ACTION: Notice.

SUMMARY: This is a notice of opportunity for hearing on the proposal by the Director of the Bureau of Veterinary Medicine to withdraw approval of all applications for animal feeds bearing of containing new animal drugs (Form FDA–1800) which applications are held by the Pembroke Elevator and Seed Co., Box 89, Pembroke, KY 42266. Withdrawal of the applications is proposed because new information shows that the firm's methods and controls used for manufacturing and processing such feeds are not adequate to assure and preserve the identity, strength, quality, and purity of the new animal drugs therein nor were they made adequate within a reasonable time after receipt of written notice specifying the deficiencies.

DATE: A written appearance requesting a hearing giving reasons why the applications should not be withdrawn is required by December 29, 1980.

ADDRESS: Written requests to the attention of the Dockets Management Branch (formerly the Hearing Clerk's office) (HFA–305), Food and Drug Administration, Rm. 4–62, 5600 Fishers Lane, Rockville, MD 20857.

FOR FURTHER INFORMATION CONTACT: Frank G. Pugliese, Bureau of Veterinary Medicine (HFV–234), Food and Drug Administration, 5600 Fishers Lane, Rockville, MD 20857, 301–443–3460.

SUPPLEMENTARY INFORMATION: The Pembroke Elevator and Seed Co. is a commercial feed mill which manufactures custom medicated feeds. The firm holds three approved medicated feed applications (Form FDA–1800) for the manufacture of medicated feeds bearing or containing new animal drugs as required by section 512(m) of the Federal Food, Drug, and Cosmetic Act (21 U.S.C. 360b(m)) as follows:

1. F 103–061 for animal feeds containing carbadox and pyrantel tartrate; approved January 22, 1976.
2. F 103–062 for animal feeds containing carbadox; approved January 23, 1976.
3. F 104–882 for animal feeds containing virginiamycin; approved May 26, 1976.

For a feed manufacturer to obtain approval from the Food and Drug Administration (FDA) to manufacture medicated feeds containing new animal drugs, it must submit a medicated feed application for each such medicated feed. To obtain approval the applicant agrees when he or she signs the application (Form FDA–1800) to comply with current good manufacturing practice regulations (CGMPR's) as set forth in Part 225 (21 CFR Part 225) for the purpose of assuring that the medicated feed meets the requirement of the act as to safety, quality, and purity.

Although the applicant agrees to comply with CGMPR's, he or she is not required to submit documentation to demonstrate that the manufacturer is or will be in compliance. FDA does not obtain evidence of any deficiencies until the agency conducts a subsequent inspection or receives information from another source.

The firm was inspected September 20, 1977 by the State of Kentucky. The inspection revealed significant deviations from CGMPR, including, but not limited to, the following:

1. Inaccurate and untested scales were used to weigh drugs (21 CFR 225.30(b)(3) and (4)).
2. Daily drug inventory was not maintained for each drug used (21 CFR 225.42(b) (6)).
3. No assays of medicated feeds were performed (21 CFR 225.58(b)).

By letter dated November 28, 1977, FDA informed the firm that any pending

or future medicated feed applications would not be considered for approval because of the CGMPR deviations reported by the State of Kentucky.

On June 27–30 and July 6, 1978, FDA conducted an inspection of the firm. A copy of the investigator's findings issued to the firm at the conclusion of the inspection (FD–483) included the following:

1. Scales had not been tested for accuracy at least once a year (21 CFR 225.30(b)(4)).

2. Packaged and bulk drugs were not handled or stored in a manner such that their identity, strength, quality, and purity were maintained (21 CFR 225.42(b)(2), (3) and (4)).

3. Receipt records were not maintained for each lot of drug received (21 CFR 225.42(b)(5)).

4. Drug inventory records were not maintained daily and did not include manufacturer's lot number, nor the batch of medicated feed in which each drug was used (21 CFR 225.42(b)(6)).

5. Drug inventory discrepancies were not investigated, nor was corrective action taken (21 CFR 225.42(b)(7)).

6. Production records did not always include the quantity and name of drug components used, mixing instructions, or batch size (21 CFR 225.102(b)(2) and (3)).

On the basis of these inspectional findings, FDA notified the firm by letter dated March 8, 1979, that these conditions and practices are serious violations of the Federal Food, Drug, and Cosmetic Act and CGMPR: consequently, FDA intended to issue an order withdrawing approval of the firm's medicated feed applications as provided in section 512(m)(4)(B) of the act (21 U.S.C. 360b(m)(4)(B)) unless prompt corrective action was taken.

In a letter dated March 14, 1979, the firm responded to FDA's written intentions to withdraw approved medicated feed applications and indicated that many improvements had been implemented since the previous inspection.

As a followup to the letter referenced above, FDA reinspected Pembroke Elevator and Seed Co. on April 7 through April 11, 1980 and found that only minor corrections had been implemented by the firm. A copy of the investigational findings issued to the firm (FD 483) included the following:

1. Receipt records were not maintained for each lot of drug received (21 CFR 225.42(b)(5)).

2. Drug inventory was not maintained on each lot of drug by means of a daily comparison of actual and theoretical usage. Inventory discrepancies were not investigated (21 CFR 225.42(b)(7)).

3. No records were available to indicate that any medicated feeds had been assayed (21 CFR 225.58(c)).

4. Adequate labeling did not always accompany bagged or bulk medicated feeds (21 CFR 225.80(a) and (b)).

5. In the case of custom formula feeds, the Master Record File and production records required by 21 CFR 225.102 did not consist either of such records or of copies of the customer's purchase orders and the manufacturers's invoices bearing the information required by this section (21 CFR 225.102(b)(3)).

Additional details elaborating on the foregoing are stated in the FD–483, a copy of which is available to any interested person from the Dockets Management Branch.

Therefore, notice is given to Pembroke Elevator and Seed Co. and to any other interested persons who may be adversely affected, that the Director proposes that an order be issued under section 512(m)(4)(B)(ii) of the Federal Food, Drug, and Cosmetic Act (21 U.S.C. 360b(m)(4)(B)(ii)), withdrawing approval of the listed applications and all amendments and supplements thereto on the grounds that new information shows that the methods used in, and the controls used for, the manufacture of animal feeds bearing or containing new animal drugs are inadequate to assure and preserve the identity, strength, quality, and purity of the new animal drugs contained therein, and they were not made adequate within a reasonable time after receipt of written notice specifying such deficiencies.

If the holder of the approvals or any other interested person elects to avail himself or herself of an opportunity for hearing under section 512(m)(4)(B) of the act and § 514.200 (21 CFR 514.200), that person must file with the Dockets Management Branch (HFA–305), Food and Drug Administration, Rm. 4–62, 5600 Fishers Lane, Rockville, MD 20857, a written appearance requesting such a hearing and giving the reason why the applications should not be withdrawn by December 29, 1980.

The failure of the holder of the approvals to file timely written appearance and request for hearing as required by § 514.200 constitutes an election not to avail himself or herself of the opportunity for a hearing, and the Director of the Bureau of Veterinary Medicine will without further notice enter a final order withdrawing the approvals.

A request for hearing may not rest upon mere allegations or denials, but must set forth specific facts showing that there is a genuine and substantial issue of fact that requires a hearing.

If it clearly appears from the data in the application and from the reasons and a factual analysis in the request for the hearing that no genuine and substantial issue of fact precludes the withdrawal of approval of the application, the Commissioner of Food and Drugs will enter an order on this data, stating his findings and conclusions.

If review of the data or information submitted by the applicant or any other interested persons warrants the conclusion that there exists substantial evidence demonstrating the firm is in compliance with the requirements of current good manufacturing practice, the Director will rescind this notice of opportunity for hearing. The Director reserves the right to verification of such data and information before reaching a decision to rescind the notice.

If a hearing is requested and is justified by the applicant's response to this notice of opportunity for hearing, the issues will be defined. The Commissioner of Food and Drugs will assign an Administrative Law Judge and issue, as soon as practicable, a written notice of the time and place at which the hearing will commence.

Four copies of all submissions pursuant to this notice must be filed with the Dockets Management Branch, Food and Drug Administration. Except for data and information prohibited from public disclosure under 21 U.S.C. 331(j) or 18 U.S.C. 1905, responses to this notice may be seen in the Dockets Management Branch (formerly the Hearing Clerk's office) (HFA–305), Food and Drug Administration, between 9 a.m. and 4 p.m., Monday through Friday.

This notice is issued under the Federal Food, Drug, and Cosmetic Act (sec. 512(m), 82 Stat. 348–350 (21 U.S.C. 360b(m))) and under authority delegated to the Commissioner of Food and Drugs (21 CFR 5.1) and redelegated to the Director of the Bureau of Veterinary Medicine (21 CFR 5.84).

Dated: November 19, 1980.

Gerald B. Guest,

Acting Director, Bureau of Veterinary Medicine.

[FR Doc. 80-36790 Filed 11-26-80; 8:45 am]

BILLING CODE 4110-03-M

Health Services Administration

Home Health Program; Announcement of the Possible Availability of Grants for Home Health Services and Training Projects

Notice is hereby given that competitive applications are now being accepted for project grants to develop

and expand home health services (service grants) and for grants for demonstrating the training of home health personnel (training grants) under the authority of section 339 of the Public Health Service (PHS) Act (42 U.S.C. 255). Congressional approval of a fiscal year 1981 appropriation for this program is pending and may not materialize. If funding does become available, it is estimated that there will be $3 million for about 45 service grants and $1 million for about 20 training grants this fiscal year. This program's Catalog of Federal Domestic Assistance number is 13.888.

Development and Expansion of Services

Section 339(a) of the PHS Act authorizes the Secretary to make grants to public and nonprofit private entities for support of the development and expansion of home health services as defined in section 1861(m) of the Social Security Act in areas in which such services are not otherwise available. Regulations applicable to these grants, published in the Federal Register on June 3, 1977 (42 FR 28692), state that the Secretary will give preference to approvable applications for projects that will serve catchment areas in which a high percentage of the population is elderly, medically indigent, or both (referred to below as "preference areas"). See 42 CFR 51e.107.

Applicants which propose to serve preference areas, as defined in the regulations, will receive priority consideration for funding. However, it is anticipated that funds will be available for both the funding of projects which propose to serve preference areas, and those which propose to serve nonpreference areas. May 1, 1981, is the deadline for the receipt of completed applications at the appropriate Regional Office (listed below). Applications must be received by the appropriate Health Systems Agency(s) and A-95 clearinghouse(s) at least 60 days before the date applications are due at the Regional Office.

Training of Personnel

Section 339(b) of the PHS Act authorizes the Secretary to make grants to public and nonprofit private entities to demonstrate the training of professional and paraprofessional personnel to provide home health services. Regulations applicable to these grants were published in the Federal Register on July 20, 1979 (44 FR 42687). See 42 CFR Part 51e, Subpart B.

Applications will be accepted for the training of home health aides or administrative personnel as described in the regulations. June 1, 1981, is the deadline for receipt of grant applications at the appropriate Regional Office. Applications must be received by the appropriate Health Systems Agency(s) and A-95 clearinghouse(s) at least 60 days before the date applications are due at the Regional Office.

Information may be obtained from the representative of the Home Health Services Grant Program at the appropriate Regional Office. The representative may be contacted for consultation and technical assistance relative to development of an application for a services or training grant. Completed applications should be submitted to the Grants Management Office at the appropriate Regional Office.

Applications for services and training grants which are not received by the appropriate Regional Office by the deadline dates announced in this notice will not be considered.

Dated: November 17, 1980.

George I. Lythcott,

Assistant Surgeon General, Administrator.

Public Health Service

Regional Health Administrators

Edward J. Montminy, Regional Health Administrator, PHS, Region I, John F. Kennedy Federal Building, Boston, Massachusetts 02203, (617) 223-6827 (FTS: 8-223-6827).

Karst J. Besteman, Regional Health Administrator, PHS, Region II, 26 Federal Plaza, New York, New York 10007, (212) 264-2560 (FTS: 8-264-3939).

H. McDonald Rimple, M.D., M.P.H., Regional Health Administrator, PHS, Region III, P.O. Box 13716, Philadelphia, Pennsylvania 19101, (215) 596-6637 (FTS: 8-596-6637).

George A. Reich, M.D., Regional Health Administrator, PHS, Region IV, 101 Marietta Tower, Suite 1007, Atlanta, Georgia 30323, (404) 221-2316 (FTS: 8-242-2316).

E. Frank Ellis, M.D., Regional Health Administrator, PHS, Region V, 300 South Wacker Drive, Chicago, Illinois 60606, (312) 353-1385 (FTS: 8-353-1385).

Sam Bell, Regional Health Administrator, PHS, Region VI, 1200 Main Tower Building, Dallas, Texas 75202, (214) 767-3879 (FTS: 8-729-3879).

Youn Bock Rhee, Regional Health Administrator, PHS, Region VII, 601 East 12th Street, Kansas City, Missouri 64106, (816) 374-3291 (FTS: 8-758-3291).

Hilary H. Connor, M.D., Regional Health Administrator, PHS, Region VIII, 19th and Stout Streets, Denver, Colorado 80294, (303) 837-4461 (FTS: 8-327-4461).

Sheridan L. Weinstein, M.D., Regional Health Administrator, PHS, Region IX, 50 United Nations Plaza, San Francisco, California 94102, (415) 556-5810).

Ms. Dorothy H. Mann, Regional Health Administrator, PHS, Region X, Arcade Plaza Building, 1321 Second Avenue, Mail Stop 805, Seattle, Washington 98101, (206) 442-0430 (FTS: 8-399-0430).

[FR Doc. 80-36993 Filed 11-26-80; 8:45 am]

BILLING CODE 4110-84-M

National Institutes of Health

Arteriosclerosis, Hypertension and Lipid Metabolism Advisory Committee; Meeting

Pursuant to Public Law 92-463, notice is hereby given of the meeting of the Arteriosclerosis, Hypertension, and Lipid Metabolism Advisory Committee, National Heart, Lung, and Blood Institute, January 13, 1981, National Institutes of Health, Building 31, Conference Room 7, 6th Floor, Bethesda, Maryland. The entire meeting will be open to the public from 9:00 a.m. to 4:00 p.m. on Tuesday, January 13, to evaluate program support in Arteriosclerosis, Hypertension, and Lipid Metabolism. Attendance by the public will be limited on a space available basis.

Mr. York Onnen, Chief, Public Inquiries and Reports Branch, National Heart, Lung, and Blood Institute, Building 31, Room 4A-21, National Institutes of Health, Bethesda, Maryland 20205, Phone (301) 496-4236, will provide summaries of the meeting and rosters of committee members.

Dr. G. C. McMillan, Associate Director for Etiology of Arteriosclerosis and Hypertension Program, NHLBI, Room 4C-12, Federal Building, National Institutes of Health, Bethesda, Maryland 20205, Phone (301) 496-1613, will furnish substantive program information.

(Catalog of Federal Domestic Assistance Program No. 13.837, Heart and Vascular Diseases Research, National Institutes of Health)

Note.—NIH programs are not covered by OMB Circular A-95 because they fit the description of "programs not considered appropriate" in section 8(b)(4) and (5) of that Circular.

Dated: November 13, 1980.

Suzanne L. Fremeau,

Committee Management Officer, National Institutes of Health.

[FR Doc. 80-37015 Filed 11-26-80; 8:45 am]

BILLING CODE 4110-08-M

Cardiology Advisory Committee; Meeting

Pursuant to Public Law 92–463, notice is hereby given of the meeting of the Cardiology Advisory Committee, National Heart, Lung, and Blood Institute, January 12 and 13, 1981, in Conference Room 8, Building 31C, National Institutes of Health, 9000 Rockville Pike, Bethesda, Maryland 20205.

The entire meeting will be open to the public from 8:30 a.m. to 5:00 p.m. Attendance by the public will be limited to space available. Topics for discussion will include a review of the research programs relevant to the Cardiology area and consideration of future needs and opportunities.

Mr. York Onnen, Chief, Public Inquiries and Reports Branch, National Heart, Lung, and Blood Institute, Building 31, Room 4A21, National Institutes of Health, Bethesda, Maryland 20205, phone (301) 496–4236, will provide summaries of the meeting and rosters of the Committee members.

Barbara Packard, M.D., Ph.D., Associate Director for Cardiology, Division of Heart and Vascular Diseases, National Heart, Lung, and Blood Institute, Federal Building, Room 320, Bethesda, Maryland 20205, phone (301) 496–5421, will furnish substantive program information upon request.

(Catalog of Federal Domestic Assistance Program No. 13.837, Heart and Vascular Diseases Research, National Institutes of Health)

Note.—NIH programs are not covered by OMB Circular A–95 because they fit the description of "programs not considered appropriate" in Section 8(b)(4) and (5) of that Circular.

Dated: November 13, 1980.

Suzanne L. Fremeau,

Committee Management Officer, National Institutes of Health.

[FR Doc. 80–37017 Filed 11–26–80; 8:45 am]

BILLING CODE 4110–08–M

High Blood Pressure Working Group; Meeting

Notice is hereby given of the meeting of the High Blood Pressure Working Group, sponsord by the National High Blood Pressure Education Program, National Heart, Lung, and Blood Institute, on January 12, 1981, Building 31, C Wing, Conference Room 6, at the National Institutes of Health, 9000 Rockville Pike, Bethesda, Maryland 20205.

The entire meeting, from 9:00 a.m., to 5:00 p.m., will be open to the public. The Working Group is meeting to define the priorities, activities, and needs of the participating groups in the National High Blood Pressure Education Program. Attendance by the public will be limited to space available.

For detailed program information and agenda contact: Mr. Graham W. Ward, Chief, Health Education Branch, National High Blood Pressure Education Program, National Heart, Lung, and Blood Institute, NIH, Building 31, Room 4A24, 9000 Rockville Pike, Bethesda, Maryland 20205 (301) 465–1051.

For the list of participants and meeting summary contact: Mr. York Onnen, Chief, Public Inquiries and Reports Branch, National Heart, Lung, and Blood Institute, NIH, Building 31, Room 4A17, 9000 Rockville Pike, Bethesda, Maryland 20205 (301) 496–4236.

Dated: November 13, 1980.

Suzanne L. Fremeau,

Committee Management Officer, National Institutes of Health.

[FR Doc. 80–37016 Filed 11–26–80; 8:45 am]

BILLING CODE 4110–08–M

Office of the Secretary

Social Security Administration; Statement of Organization, Functions, and Delegations of Authority

Part S of the Statement of Organization, Functions, and Delegations of Authority for the Department of Health, Education, and Welfare contains the Statement of Organization, Functions, and Delegations of Authority for the Social Security Administration (SSA). On March 21, 1979, an amendment to Part S was published in the Federal Register (44 FR 17218–17233) to reflect a reorganization of SSA. Sections SG.00, SG.10, and SG.20 of the amended material published on March 21, 1979, as contained in pages 17225–26, describe the mission, organization, and functions for SSA's Office of Hearings and Appeals (OHA).

The Office statements are being restated and expanded, not only to effect the establishment of division-level statements for components in OHA, but to implement a number of additional functional changes, including the elimination of the Office of Management Operations, the redesignation of its division-level components as offices, and the placement of responsibility for management of the Regional Chief Administrative Law Judges under the direct authority of the Chief Administrative Law Judge. Other changes are the transfer of responsibility for the vocational assessment function from the former Office of Management Operations to the Office of the Associate Commissioner; the transfer of responsibility for review and approval of attorneys' fees for services at the hearings level to the Regional Chief Administrative Law Judges; and a statement strengthening the duties of the former Division of Appraisal which is being redesignated, now, as the Office of Appraisal. The revised and expanded material reads as follows:

Sec. SG.00 *The Office of Hearings and Appeals*—(Mission): The Office of Hearings and Appeals (OHA) holds hearings and issues decisions as part of the SSA appeals process. It directs a nationwide field hearings organization staffed with Administrative Law Judges who conduct impartial hearings and make decisions on appealed determinations involving retirement, survivors, disability, and health insurance benefits; black lung benefits; and supplemental security income. The Office also performs central reviews of decisions by Administrative Law Judges which are appealed by a claimant, or reopened on the motion of the Appeals Council, and renders the Secretary's final decision on such cases.

Sec. SG.10 *The Office of Hearings and Appeals*—(Organization): The Office of Hearings and Appeals, under the leadership of the Associate Commissioner for Hearings and Appeals, includes:

A. The Associate Commissioner for Hearings and Appeals (SGA).

B. The Deputy Associate Commissioner for Hearings and Appeals, Program (SGA).

C. The Deputy Associate Commissioner for Hearings and Appeals, Operations (SGA).

D. The Chief Administrative Law Judge (SGA).

E. The Immediate Office of the Associate Commissioner for Hearings and Appeals (SGA) which includes:

1. The Executive Secretariat (SGA1).

2. The Congressional and Public Inquiries Staff (SGA2).

3. The Equal Opportunity Staff (SGA5).

F. The Vocational Consultant Program Staff (SGB).

G. The Appeals Council (SGC).

H. The Office of Appeals Operations (SGL):

1. Attorney Fee Staff (SGL8).

2. Divisions of Appeals Operations (SGLA, B, C, D).

3. Division of Civil Actions (SGL6).

I. The Office of Policy and Procedures (SGP):

1. Division of Appeals Procedures (SGP3).

2. Division of Hearings Procedures (SGP1).

3. Division of Program Development (SGP2).

J. The Office of Field Administration (SGE): 1. Divisions of Field Administration (SGE1, 2, 3).

K. The Office of Appraisal (SGR):

1. Division of Appellate Review (SGR1).

2. Division of Program Review (SGR2).

L. The Office of Facilities and Personnel Administration (SGG):

1. Division of Personnel Management (SGG1).

2. Division of Facilities (SGG2).

M. The Office of Management Coordination (SGT):

1. Division of Financial Management (SGT1).

2. Division of Management Analysis (SGT2).

3. Division of Management Information Systems (SGT3).

N. The Offices of the Regional Chief Administrative Law Judges (SG–FX/SG–FX9).

Sec. SG.20 *The Office of Hearings and Appeals*—(Functions):

A. *The Associate Commissioner for Hearings and Appeals* (SGA) is directly responsible to the Commissioner for carrying out OHA's mission and provides general supervision to the major components of OHA. The Associate Commissioner serves as Chairperson of the Appeals Council.

B. *The Deputy Associate Commissioner for Hearings and Appeals, Program* (SGA) assists the Associate Commissioner in carrying out his/her OHA-wide responsibilities and performs other duties as the Associate Commissioner may prescribe. In addition, this Deputy serves as the Deputy Chairperson of the Appeals Council and has specialized duties in day-to-day program activities.

C. *The Deputy Associate Commissioner for Hearings and Appeals, Operations* (SGA) assists the Associate Commissioner in carrying out his/her OHA-wide responsibilities and performs other duties as the Associate Commissioner may prescribe. In addition, this Deputy has specialized duties in day-to-day operations activities.

D. *The Chief Administrative Law Judge* (SGA) administers a nationwide organization of administrative law judges engaged in conducting hearings and in rendering decisions in cases where claimants disagree with reconsidered and revised determinations. These determinations involve claims for retirement, survivors, disability, health insurance, and supplemental security income benefits under Titles II, XVI, and XVIII of the Social Security Act, as amended, and disability and survivors benefits under Title IV of the Federal Coal Mine Health and Safety Act of 1969, as amended. In this connection, he/she directs a professional liaison staff engaged in providing counsel, guidance, and advice to professional field personnel in implementing substantive policy, program and procedural matters; provides management support and oversight for all administrative and managerial functions involved in the day-to-day operations of field activities; coordinates office hearing activities; and conducts liaison with other government and private agencies.

E. *The Immediate Office of the Associate Commissioner for Hearings and Appeals* (SGA) assists the Associate Commissioner, the Deputies, and the Chief Administrative Law Judge by providing a full range of staff services to assist them in carrying out their duties.

1. *The Executive Secretariat* (SGA1)

a. Maintains liaison and coordination between the Office of the Associate Commissioner and major OHA components. Coordinates, clears, and reviews completed staff work on action memoranda directed to the Associate Commissioner.

b. Controls correspondence for the Office of the Associate Commissioner, assigning action on incoming correspondence and developing information on action requests directed to the Office of the Associate Commissioner.

c. Provides OHA-level guidance and liaison on correspondence management.

d. Coordinates and prepares briefing materials for meetings attended by the Associate Commissioner.

2. *The Congressional and Public Inquiries Staff* (SGA2)

a. Prepares and reviews OHA responses to congressional and public inquiries and correspondence.

b. Evaluates correspondence for conformance with OHA standards, policies, and procedures.

c. Determines when inquiries represent request for hearings or reviews and assures that such requests are directed to the appropriate OHA component.

3. *The Equal Opportunity Staff* (SGA5)

a. Plans, develops, implements, and administers an equal opportunity program within OHA.

b. Investigates and attempts to resolve informal complaints of discrimination arising in Equal Opportunity (EO) areas of responsibility.

c. As appropriate, participates with SSA's Office of Civil Rights and Equal Opportunity staff in the development of EO policies and procedures, and develops necessary adaptations to policies, procedures, standards, and guidelines necessary for the operation of this program within OHA.

F. *Vocational Consultant Program Staff* (SGB)

1. Provides OHA-wide leadership and guidance in obtaining expert opinion and testimony on adjudicative factors having psychological, vocational, educational, and related aspects bearing on work capacity.

2. Formulates and implements policies and plans to guide Administrative Law Judges and other OHA staff in obtaining the assistance of vocational experts.

3. Directs, coordinates, and administers a comprehensive nationwide program designed to insure the services of vocational experts throughout the United States.

G. *The Appeals Council* (SGC) reviews decisions of Administrative Law Judges involving retirement, survivors, disability, health insurance, supplemental security income, and black lung benefits, on the motion of appellants or on its own motion. The Appeals Council examines case records, obtains additional evidence when appropriate, and renders written decisions or orders which are the Secretary's final decisions or orders, or remands cases to Administrative Law Judges. It recommends action concerning decisions appealed to the courts, and obtains additional evidence, prepares supplemental decisions on remanded cases and recommends whether appeals should be taken to higher courts on judicial reversals of the Secretary's decisions. It directs the medical advisory services program for OHA's components in the evaluation of claims for disability and health insurance benefits; supplemental security income for disability and blindness; and black lung benefits. It provides guidance in the utilization of medical advisors throughout OHA and participates in the formulation of medical policies used in the evaluation of claims for disability and health insurance benefits; supplemental security income for disability and blindness; and black lung benefits. It maintains liaison with medical groups to promote program understanding and to keep abreast of disability evaluation developments and changes in health insurance regulations.

H. *The Office of Appeals Operations* (SGL) provides advice and assistance to the Appeals Council on the adjudication of cases. It reviews decisions of

Administrative Law Judges to assist the Appeals Council in deciding whether to assume jurisdiction. It analyzes cases and recommends action to the Appeals Council on appealed and litigated cases, and prepares documents required to implement the action decided upon by the Appeals Council. The Office of Appeals Operations identifies and analyzes problem areas and recommends improvements in the appeals process. It authorizes the payment of fees of attorneys and other representatives of claimants for the provision of services at the Appeals Council level. The Office of Appeals Operations includes the following components and functions:

1. *Attorney Fee Staff* (SGL8)

a. Reviews and analyzes fee petitions from attorneys and other persons for representation of claimants before the Social Security Administration where the services were concluded at the Appeals Council level.

b. Authorizes the amount of the fee that the representative may charge. When a request for administrative review of an initial fee determination is received, recommends to the Associate Commissioner whether the initial fee authorization should be affirmed or revised.

c. Recommends to the Office of General Counsel (OGC) whether to appeal court orders authorizing attorney fees.

d. Coordinates OHA attorney fee activities with other components of SSA and OGC.

2. *Divisions of Appeals Operations* (SGLA,B,C,D)

a. Advise and assist the Appeals Council and other OHA officials on all entitlement matters relating to claims filed under Titles II, XVI, and XVIII of the Social Security Act, as amended, and Title IV of the Federal Coal Mine Health and Safety Act of 1969, as amended.

b. Examine hearing decisions that are not being appealed, as well as formal requests for Appeals Council review, and recommend in both instances whether the Appeals Council should review, and, if so, the appropriate course of action. If the Appeals Council takes jurisdiction, initiate action on behalf of the Appeals Council.

c. Provide substantive advice and recommendations, as needed, in coordination with the Office of Policy and Procedures on proposed Social Security Rulings.

3. *Division of Civil Actions* (SGL6)

a. Functions as a professional and technical source of consultation for the Appeals Council and other OHA officials in all litigated cases involving claims for benefits under Titles II, XVI, and XVIII of the Social Security Act, as amended, and Title IV of the Federal Coal Mine Health and Safety Act of 1969, as amended; and claims by hospitals, skilled nursing facilities, and independent laboratories seeking certification or continued certification under the Social Security Act.

b. Analyzes and recommends action on cases remanded by the courts; recommends to OGC, on behalf of the Appeals Council, defense on the record of those litigated cases where further administrative action is deemed unwarranted.

c. In reviewing court decisions, recommends appeal in light of the administrative implications involved.

d. Detects and defines problem areas or trends in decisions of the Federal courts.

e. Provides substantive advice and recommendations as needed in coordination with OHA's Office of Policy and Procedures on proposed Social Security Rulings.

I. *The Office of Policy and Procedures* (SGP) plans, analyzes, and develops OHA-wide policy and procedural guidelines for the hearings process. This Office plans, analyzes, and develops policy and procedural guidelines for the Appeals Council's review processes, civil actions processes, and support staff. It provides a system for communicating hearings and appeals policies and procedures, through the issuance of manuals and directives; and develops and maintains publications, informational material, references, and forms on the hearings and appeals processes. The Office of Policy and Procedures reviews current and developing trends in administrative law; analyzes policy recommendations; and develops long-range and short-range hearings and appeals policy plans. It provides advice and guidance throughout OHA on matters involving the development of program policies and procedures. It coordinates policy and procedural matters within OHA and with other SSA components, the Department Office of the General Counsel, other Department components, other Federal agencies, and private organizations. The Office of Policy and Procedures includes the following components and functions:

1. *Division of Appeals Procedures* (SGP3)

a. Plans, develops, and coordinates policy and procedural guidelines for the SSA appeals review and civil actions process under Titles II, XVI, and XVIII of the Social Security Act, as amended, and Title IV of the Federal Coal Mine Health and Safety Act of 1969, as amended.

b. Provides advisory services, consultation, and staff assistance to officials and other components in OHA and prepares submittals involving procedural issues for consideration of the Appeals Council.

c. With the Division of Hearings Procedures, reviews how instructions and information on the appeals process are communicated, such as notices concerning recent court developments and, as appropriate, modifies program and operating directives to ensure the provision of uniform policy and procedural guidelines.

d. Reviews and develops forms used in the Appeals Council and civil actions processes.

e. Participates in the development of, and assists with, Office information programs pertaining to the Appeals Council review process and court review rights, and reviews recommendations for changes in the appeals or civil action processes.

2. *Division of Hearings Procedures* (SGP1)

a. Plans, develops, and coordinates policy and procedural guidelins for the hearings process under Titles II, XVI, and XVIII of the Social Security Act, as amended, and Title IV of the Federal Coal Mine Health and Safety Act of 1969, as amended.

b. Provides advisory services, consultation, and staff assistance to the Office of the Director, Office of Appeals Operations, and Administrative Law Judges.

c. With the Division of Appeals Procedures, maintains an effective system for communicating instructions through such means as handbooks, program directives, and informational notices, necessary in the hearings process.

d. Reviews and develops forms used in the hearings process.

e. Participates in the development of, and assists with, Office information programs pertaining to the hearings process; and reviews recommendations concerning changes in the hearings process policies and procedures.

3. *Division of Program Development* (SGP2)

a. Develops policy and procedures for new programs in accordance with the Administrative Procedure Act.

b. Reviews current and developing trends in administrative law and assesses their applicability to OHA processes and objectives.

c. Reviews and takes appropriate action on substantive instructions and issuances of other SSA components in areas of OHA interest; recommends

improvements in the appellate process as appropriate, and prepares reports on OHA policy, procedures, and program activities to congressional committees and others.

d. Provides staff assistance and technical, advisory, and consultative services to officials and components throughout OHA in its policy and procedural areas of responsibilities, and submits questions of law or policy for consideration by the Appeals Council.

J. *The Office of Field Administration* (SGE) coordinates the management resources supporting field activities. It conducts operational reviews of regional and hearings offices and maintains liaison with Regional Chief Administrative Law Judges and their representatives on management and administrative matters. The Office represents the interests of field management in Central Office, OHA, deliberations and in liaison with other SSA and Department components concerning administrative and managerial functions. It establishes management procedures and directs management activities to improve consultation and communication between the field and Central Office, OHA. The activities of the Office of Field Administration are conducted through three divisions according to specific regional areas of responsibility.

K. *The Office of Appraisal* (SGR) plans and conducts a comprehensive OHA-wide appraisal program designed to measure quantitatively and qualitatively the overall effectiveness of the nationwide hearings and appeals process. This Office directs planning efforts within OHA addressed to the development of techniques and systems for use in continuing appraisal activities for all substantive and technical aspects related to the processing of claims through OHA. It analyzes the results of the appraisal system to determine deviations in operating results from established administrative quality standards, statutory and regulatory policy, and procedural requirements. It prepares reports of appraisal system/study findings and recommendations for improving the effectiveness of hearings and appeals operating and staff processes, functions and results for OHA management consideration. Additionally, it designs and conducts various program integrity and surveillance studies and analyses of OHA processes and operations to ensure that OHA administrative/managerial programs, policies, and practices are consistent with the highest standards of integrity. The Office of Appraisal includes the following components and functions:

1. *Division of Appellate Review* (SGR1)

a. Plans and conducts a continuing appraisal program of OHA's hearings and appeals processes, monitoring compliance with policies and procedures and the quality of results achieved.

b. Designs and oversees the installation of appropriate systems and procedures for collecting, recording, analyzing, and evaluating data pertinent to assessing the quality of OHA work products emanating from the several decision levels of the appellate process.

c. Analyzes data flowing from review activities both internal and external to OHA for possible impact on OHA, and identifies problem areas and deficiencies in policies, policy application, methods and procedures, and develops recommendations for OHA management consideration.

d. Provides advice and assistance to other OHA components regarding the interpretation and application of quality review and related special study findings and recommendations.

2. *Division of Program Review* (SGR2)

a. Designs and conducts various program integrity and surveillance studies and analyses of OHA managerial and administrative areas to ensure that OHA administration/managerial programs, policies, and practices are consistent with the highest standards of integrity and equity.

b. Develops and conducts systematic evaluations of the integrity of the appellate process.

c. Conducts special studies of external factors having an impact on OHA operations and quality.

L. *The Office of Facilities and Personnel Administration* (SGG) plans, develops, and administers the OHA personnel management program, including recruitment and placement; position classification; incentive awards; employee services; labor management relations; employee development; and training programs. It plans and directs OHA administrative support activities, including space; forms and records; property management; procurement and supply; security; equipment control and maintenance; preparation of visual aids; and mail/messenger services. It plans and executes a program establishing requirements for and complying with established occupational health and safety concepts, regulations, standards, and procedures. The Office of Facilities and Personnel Administration includes the following components and functions:

1. *Division of Personnel Management* (SGG1)

a. Plans, develops, and administers OHA's personnel management program, including recruitment and placement, position classification and pay administration, incentive awards, employee services, employee-management relations, and related activities.

b. Evaluates the effectiveness of OHA's personnel-management functions and activities; resolves personnel-management problems; and participates in the implementation of employee-management cooperation and equal opportunity programs.

c. Institutes required improvements in OHA's personnel management policy and procedures consistent with SSA/Department personnel policies and procedures.

d. Acts on behalf of the Associate Commissioner to recruit, examine, and appoint Administrative Law Judges, consistent with SSA/Department/OPM policies and procedures.

2. *Division of Facilities* (SGG2)

a. Plans, directs, and provides administrative support services in the areas of space planning and utilization; forms and records management; property management; equipment control and maintenance; preparation of visual aids and exhibits; safety and self-protection, including emergency planning; procurement and supply; mail and messenger services; and library reference.

b. Coordinates services provided to OHA by SSA, Department, OPM, and other agencies, such as building maintenance, and communications services.

M. *The Office of Management Coordination* (SGT) plans and directs the OHA management analysis program, which includes the design, development, implementation, and appraisal of management policies and programs, and researches management techniques and technological developments having possible utility for OHA. This Office directs OHA's operational and management systems planning programs; assures effective coordination of the OHA management information system with the SSA system; and maintains a case control and statistical reporting system on the adjudication process. It plans, develops, and coordinates OHA's financial management program and provides financial guidance and control in the area of budget formulation and execution; work measurement and workload forecasting; pay and travel; position control; contract services; and fiscal operation. The Office of

Management Coordination includes the following components and functions:

1. *Division of Financial Management* (SGT1)

a. Plans, develops, and coordinates OHA's financial management programs, advising the Associate Commissioner of the financial impact on all decisions which affect OHA.

b. Formulates and executes budgetary requirements and controls in the areas of resource management, work measurement and workload forecasting; resource forecasting and reporting; administrative cost allocation; cost benefit analysis; pay and travel; ceiling control; contract services; fiscal operations; and regional interface on the budget process.

2. *Division of Management Analysis* (SGT2)

a. Plans, develops, and coordinates OHA's organizational and administrative planning and analysis programs; conducts an OHA-wide management analysis program to design, develop, and implement management policies, procedures, and methods for improving the effectiveness, efficiency, and economy of operations.

b. Plans, develops, conducts, and administers the OHA organization and position control system, and coordinates an OHA program for resource utilization.

c. Participates in continuing research of current management techniques and technological developments having possible application to OHA needs.

d. Implements and administers the SSA Administrative Directives System within OHA.

3. *Division of Management Information Systems* (SGT3)

a. Provides OHA leadership and direction for operational and management information systems planning encompassing both ADP and non-ADP systems.

b. Establishes systems standards, and plans overall specifications for OHA needs.

c. Reviews and evaluates proposed systems and equipment changes for conformance with long-range OHA goals and to ensure integration with other SSA systems.

d. Maintains a case control and statistical reporting system on the adjudication process to be used by management for planning, coordination, communication, and control.

e. Administers OHA's ADP systems security, reports management program and work measurement programs.

f. Applies mathematical analysis, statistical techniques, model building and cost-benefit analysis to define problem areas and provide alternative courses of action to facilitate management decisions.

N. *The Offices of the Regional Chief Administrative Law Judges* (SG-FX/SG-FX9) represent the Associate Commissioner and Chief Administrative Law Judge at the regional level on all matters involving the hearings process. They plan, organize, and administer regional programs for scheduling and conducting independent and impartial hearings on appealed determinations involving claims for retirement, survivors, disability, and health insurance benefits; supplemental security income; and black lung benefits. They provide guidance, direction, and leadership to Administrative Law Judges and their staffs. These Offices coordinate operations and administrative activities with Department regional offices; other SSA regional components; State agencies; and others, as required. Additionally, they review and analyze fee petitions from attorneys and representatives of claimants for the provision of services at the hearing level and authorize payment of fees in those cases where fees recommended by Administrative Law Judges are more than an Administrative Law Judge is authorized to grant.

Dated: November 18, 1980.

Patricia Roberts Harris,

Secretary.

[FR Doc. 80-37103 Filed 11-26-80; 8:45 am]

BILLING CODE 4110-12-M

Freedom of Information; Modified Policy on Disclosure of Amounts Paid to Individual Physicians Under the Medicare Program

AGENCY: Department of Health and Human Services.

ACTION: Announcement of Modified Policy on Disclosure of Information Following Federal Court Decisions on Disclosure of Amounts Paid to Individual Physicians Under the Medicare Program.

In the preamble to the interim rules of the Social Security Administration for disclosure of information, 42 FR 14703, March 16, 1977, the Secretary stated that the public interest in disclosure of the amounts of payments to individual physicians under the Medicaid and Medicare programs would outweigh the individual physicians' privacy interest in such information and that such disclosure would not constitute a "clearly unwarranted invasion of the individual physician's privacy."

The Department's disclosure of the amounts of payments to individual physicians under the Medicare program has been contested in Federal Court in the cases of *Florida Medical Association, Inc., et al* v. *Department of Health, Education, and Welfare, et al.* (M.D. Fla. 1980) and *The American Association of Councils of Medical Staffs of Private Hospitals, Inc., et al.* v. *Health Care Financing Administration, et al.* (E.D. La. 1980). Both courts have concluded that the disclosures do constitute an unwarranted invasion of personal privacy of the individual physicians and the Secretary has been enjoined from disclosing the amounts of payment to individual physicians.

An appeal has not been taken from the court injunctions issued. The Secretary has considered the competing interests and has concluded that the public interest in the individually identified payment amounts is not sufficient to compel disclosure in view of the privacy interests of the physicians found compelling by the courts. This determination does not affect the policy of the Department that amounts of payments made by the Department in other circumstances will be disclosed to the public. For example, amounts of payments to consultants and contractors who contract directly with the Department for the provision of goods or services to the Department will continue to be available to the public.

Dated: November 18, 1980.

Patricia Roberts Harris,

Secretary, Department of Health and Human Services.

[FR Doc. 80-37102 Filed 11-26-80; 8:45 am]

BILLING CODE 4110-12-M

DEPARTMENT OF THE INTERIOR

Bureau of Land Management

Arizona; Phoenix District, Multiple Use Advisory Council Meeting

The second meeting of the Phoenix District, BLM, Multiple Use Advisory Council will be held January 9, 1981. The meeting will be held at the district office, 2929 West Clarendon Avenue, Phoenix, Arizona, between 8:00 a.m. and 5:00 p.m.

The Council has been established by, and is managed according to the Federal Advisory Committee Act of 1972, the Federal Land Policy and Management Act of 1976, and the Public Rangelands Improvement Act of 1978.

The proposed agenda for the meeting includes the following:

1. Explanation of the role of the League of Women Voters in developing the public participation plan for the Lower Gila South planning area.

2. Discussion of BLM Public Service Action Plan and District Public Service Action Plan.

3. Explanation of the "In Lieu" land selection being made by the State of Arizona.

4. An update of the district planning and environmental impact statement work.

5. Discussion of pertinent issues identified at the Council's last meeting.

The meeting is open to the public. Interested persons may make oral statements to the Council from 1:00 to 1:30 p.m., or may file written statements for the Council's consideration. Anyone wishing to make an oral statement must notify the District Manager at the above address by January 2, 1981. Depending on the number of persons wishing to make oral statements, a time limit may be established for each speaker.

Summary minutes of the meeting will be maintained at the district office and be available for public inspection and reproduction during regular business hours within 30 days following the meeting.

For further information contact Jack de Golia at (602) 241-2908 or 241-2903.

Dated: November 19, 1980.

W. K. Barker,

District Manager.

[FR Doc. 80-36994 Filed 11-26-80; 8:45 am]

BILLING CODE 4310-84-M

Winnemucca District Multiple Use Advisory Council; Meeting

Notice is given in accordance with Pub. L. 92-463, that a meeting of the Winnemucca District Multiple Use Advisory Council will be held on January 16, 1981. The meeting will be held from 10:00 a.m. to 5:00 p.m. in the Conference Room of the Winnemucca District Office, 705 East Fourth Street, Winnemucca, Nevada 89445.

The agenda for the meeting will include: (1) Introduction of council members and key BLM staff; (2) The role of the District Advisory Council; (3) Mechanics of board membership; (4) Election of officers; (5) Public comment period; (6) The Winnemucca District and BLM organization; (7) District programs and FY 1981 Annual Work Plan; (8) Current issues; (9) Arrangements for next meeting and proposed agenda items.

The meeting is open to the public. Interested persons may make oral statements to the Council at 1:00 p.m. on January 16, 1981 or file written statements for the Council's consideration. Anyone wishing to make an oral statement must notify the District Manager, 705 East Fourth Street, Winnemucca, Nevada 89445 by January 2, 1981. Depending on the number of persons wishing to make oral statement, a per person time limit may be established by the District Manager.

Summary minutes of the Council meeting will be maintained in the District Office and available for public inspection (during regular business hours) within 30 days following the meeting.

Dated: November 18, 1980.

Robert J. Neary,

Acting District Manager for State Director, Nevada.

[FR Doc. 80-36981 Filed 11-26-80; 8:45 am]

BILLING CODE 4310-84-M

National Park Service

Buffalo Point, Pruitt, and Tyler Bend Development Areas Buffalo National River, Arkansas; Proposed Development Concept Plans Availability of Findings of No Significant Impact

Proposal Assessments which delineated a preferred plan and alternatives for the design and development of the three development areas of Buffalo Point, Pruitt, and Tyler Bend, at Buffalo National River, Searcy, Newton, Baxter, and Marion Counties, Arkansas, were distributed and made available by publication in the Federal Register of March 14, 1980, and a News Release in local news media sources.

Findings of No Significant Impact have now been completed and alternatives selected. Based on public review input received and on management decisions, the reviewers selected the preferred plans of development, with minor modifications, for the design and development of the areas. The development proposals selected best provide for the repair and maintenance of existing facilities to upgrade operational and safety standards, and for the development of new facilities and utilities for recreational use and interpretation of the Park's resources, while assuring the preservation and management of the Park's aesthetic values.

Copies of the Findings of No Siginificant Impact are available at the following locations: Buffalo National River, Post Office Box 1173, Harrison, Arkansas 72601; and the Southwest Regional Office, National Park Service, 1100 Old Sante Fe Trail, Post Office Box 728, Santa Fe, New Mexico 87501.

It is the conclusion of the National Park Service that the selected plans are not major Federal actions that will significantly affect the human environment. Comprehensive design plans and specifications will be prepared and the plans implemented. No environmental impact statements will be prepared.

Dated: November 20, 1980.

Robert I. Kerr,

Regional Director, Southwest Region National Park Service.

[FR Doc. 80-37100 Filed 11-26-80; 8:45 am]

BILLING CODE 4310-70-M

Upper Delaware Citizens Advisory Council Meeting

Notice is hereby given in accordance with the Federal Advisory Committee Act that a meeting of the Upper Delaware Citizens Advisory Council will be held at 7:00 p.m., December 12, 1980, at the Arlington Hotel, Narrowsburg, New York. The Advisory Council was established by Public Law 95-625, Section 704(f) to encourage maximum public involvement in the development and implementation of plans and programs authorized by the Act and section noted above. The Council is to meet and report to the Delaware River Basin Commission, to the Secretary of the Interior and to the Governors of New York and Pennsylvania on the preparation of a management plan and on programs which relate to land and water use in the Upper Delaware region.

The matters to be discussed at this meeting include:

1. Implementation of Section 704 of the National Parks and Recreation Act of 1978.

2. New Business.

The meeting will be open to the public. Any member of the public may file with the Council a written statement concerning the matters to be discussed. The statement should be addressed to the Council c/o Upper Delaware National Scenic and Recreational River, Drawer C, Narrowsburg, NY 12764.

Persons wishing further information concerning this meeting, or who wish to submit written statements, may contact John T. Hutzky, Area Manager, Upper Delaware National Scenic and Recreational River, Drawer C. Narrowsburg, NY 12764, phone 914-252-3947.

Minutes of the meeting will be available for inspection four weeks after the meeting at the temporary headquarters of the Upper Delaware National Scenic and Recreational River in Narrowsburg, NY.

Dated: November 17, 1980.

James W. Coleman, Jr.,

Regional Director, Mid-Atlantic Region.

[FR Doc. 80-37101 Filed 11-26-80; 8:45 am]

BILLING CODE 4310-70-M

INTERSTATE COMMERCE COMMISSION

Intent to Engage in Compensated Intercorporate Hauling Operations

This is to provide notice as required by 49 U.S.C. 10524(b)(1) that the named corporations intend to provide or to use compensated intercorporate hauling operations as authorized in 49 U.S.C. 10524(b).

1. Parent corporation and address of principal office: Combustion Engineering Inc., 900 Long Ridge Road, Stamford, CT 06902.

2. Wholly-owned subsidiaries which will participate in the operations, and address of their respective principal offices:

American Pole Structures Corporation, 8700 Fairbanks, Houston, TX 77040
Combustion Engineering Americas, Inc., 1000 Prospect Hill Road, Windsor, CT 06095
Combustion Engineering Overseas, Inc., 1000 Prospect Hill Road, Windsor, CT. 06095
Combustion Engineering-Superheater, Ltd., 1000 Prospect Hill Road, Windsor, CT 06095
CESCO International Ltd., 1000 Prospect Hill Rd., Windsor, CT. 06095
Optimum Controls of Canada Limited, 1140 de Mainsonneuve Blvd. West, Montreal, 110, Quebec, Canada H3A1N2
International Power Systems, Inc., 1000 Prospect Hill Road, Windsor, CT. 06095
Upper Canada Manufacturing Limited, 99 Bank Street, Ottowa, Ontario, Canada KIP 6C5
CEI Inc., 1000 Prospect Hill Road, Windsor, CT 06095
Gray Tool International Inc., P.O. Box 2291, Houston, TX 77001
Gray Tool Trading Company, Inc., P.O. Box 2291, Houston, TX 77001
Rector-Gray, Ltd., P.O. Box 2291, Houston, TX 77001
Rector Well Equipment Company, Inc., 949 S. Sixth Ave., Mansfield, TX 76063
Vetco Inc., 5740 Ralston St., P.O. Box 3939, Ventura, CA 93003
Vetco Offshore, Inc., 250 W. Stanley Ave., P.O. Box 1688, Ventura, CA 93001
Vetco Offshore Industries Proprietary, Ltd., 250 W. Stanley Ave., P.O. Box 1688, Ventura, CA 93001
Vetco International Inc., 5740 Ralston St., Ventura, CA 93003
Vetco Offshore Limited, 250 W. Stanley Ave., Ventura, Ca 93001
Vetco Overseas Limited, 5740 Ralston St., Ventura, CA 93003
Vetco-Disk, Inc., 5740 Ralston St., Ventura, CA 93003
C-E Natco Limited, P.O. Box 1710, Tulsa, OK 74101
C-E Natco Chemicals, Inc., 1120 Bay Area Boulevard, Pasadena, Tx 77507
Beaumont Well Works, Inc., 4710 Bellaire Boulevard, Houston, TX 77001
C-E Natco Oilfield Construction, Inc., 5330 E. 31st St., Tulsa, OK 74135
Oilfield Construction Company Inc., P.O. Box 1925, Bakersfield, CA 93303
Electric Lighting Inc., 1000 Prospect Hill Road, Windsor, CT 06095
The Air Preheater Company, Inc., Wellsville, N.Y. 14895
The Bauer Bros. Co., 3200 Upper Valley Pike, P.O. Box 968, Springfield, Ohio 45501
Bauer Bros. Co. of Canada Ltd., 192 Mary Street, P.O. Box 910, Brantford, Ontario
The Ehrsam Company, 300 N. Cedar, Abilene, Kansas 67410
Ehrsam Transport, Inc., 2nd and Factory, Enterprise, KS 67441
Crest Enginering, Inc., P.O. Box 27474, 3000 South Post Oak Road, Houston, TX 77056
Crest Engineering Ltd., P.O. Box 27475, 3000 South Post Oak Road, Houston, TX 77056
Lummus Group, Inc., 1515 Broad Street, Bloomfield, N.J. 07003
The Lummus Company, 1515 Broad Street, Bloomfield, N.J. 07003
Lummus Construction Equipment International, Inc., C-E Lummus Tower, 3000 South Post Oak Road, Houston, TX 77056
Lummus Construction Company, 300 Broadacres Drive, Bloomfield, N.J. 07003
Lummus Overseas Corporation, 1515 Broad Street, Bloomfield, N.J. 07003
Lummus International, Inc., 1515 Broad Street, Bloomfield, N.J. 07003
Construction Equipment International, Inc., C-E Lummus Tower, 3000 South Post Oak Road, Houston, TX 77056
The Lummus Company Canada Limited, 1515 Broad Street, Bloomfield, N.J. 07003
The Randall Corporation, 1400 Brittmore Road, Houston, TX 77043
C-E Morgan, Inc., 1525 NW. 167th Street, Miami, Florida 33169
Ken Thelen Co., Inc., 4749 South Whitnall Ave., Cudahy, WI 53110
C-E Minerals, Inc., 901 East Eighth Ave., King of Prussia Industrial Park, King of Prussia, PA 19406
Combustion Chemicals, Inc., 901 East Eighth Ave., King of Prussia Industrial Park, King of Prussia, PA 19406
Narvon Products, Inc., 901 East Eighth Ave., King of Prussia Industrial Park, King of Prussia, PA 19406
Mullite Company of America, 901 East Eighth Ave., King of Prussia Industrial Park, King of Prussia, PA 19406.
Cermatec Ltd., 901 East Eighth Ave., King of Prussia Industrial Park, Valley Forge, PA 19482
C-E Refractories Ltd., 901 East Eighth Ave., King of Prussia Industrial Park, Valley Forge, PA 19482
Globe Refractories, Inc., P.O. Box D, Newell, W. Va. 26050.
R&I—Ramtite (Canada) Limited, 901 East Eighth Ave., King of Prussia Industrial Park, Valley Forge, PA 19482.
Thermotect Company, Inc., 901 East Eighth Ave., King of Prussia Industrial Park, Valley Forge, PA 19482.
Knox Mining Corp., 1422 Euclid Ave., 845 Hanna Building, Cleveland, Ohio 44115.
The Muller Corp., 1422 Euclid Ave., 845 Hanna Building, Cleveland, Ohio 44115.
C-E Basic Incorporated, 1422 Euclid Ave., 845 Hanna Building, Cleveland, Ohio 44115.
Basic Ceramics, Inc., 1422 Euclid Ave., 845 Hanna Building, Cleveland, Ohio 44115.
Basic Chemicals, Inc., 1422 Euclid Ave., 845 Hanna Building, Cleveland, Ohio 44115.
B.R.I. Service Co., 1422 Euclid Ave., 845 Hanna Building, Cleveland, Ohio 44115.
Industrial Magnesia Corp., 1422 Euclid Ave., 845 Hanna Building, Cleveland, Ohio 44115.
W. S. Tyler, Incorporated, 8200 Tyler Boulevard, Mentor, Ohio 44060.
The W. S. Tyler Company of Canada Ltd., P.O. Box 3006, 225 Ontario St., St. Catherines, Ontario, Canada L2R 7B6

1. Parent corporation and address of its principal office: Corning Glass Works, Box 544, Corning, NY 14830.

2. Wholly owned subsidiaries which will participate in the operations and addresses of their principal offices:

(a) Gilford Instrument Laboratories, Inc., 132 Artino Street, Oberlin, OH 44074.
(b) Components, Inc., 313 Elm Street, Biddeford, ME 04005.

1. Parent corporation and address of principal office: Krueger Metal Products, Inc., 1330 Bellevue Street, Green Bay, WI 54308.

2. Wholly-owned subsidiaries which will participate in the operation and address of their respective principal offices:

(a) Krueger Metal Products, Inc. of Mississippi, South Green Street, Tupelo, MS 38801.
(b) Architectural Fiberglass, Inc., 431 E. Main Street, Gillette, WI 54124.

(c) Krueger Trucking, Inc., 1330 Bellevue Street, Green Bay, WI 54308.

1. Parent corporation: Lyall Electric, Incorporated—Kendallville, IN.

2. Wholly-owned subsidiaries which will participate in the operations, and address of their respective principal offices:

(a) Lyall Albion Corp.—Albion, IN
(b) Hamilton Products, Inc.—Hamilton, IN
(c) Silicones, Inc.—South Milford, IN
(d) Wolf Lake Products, Inc.—Wolf Lake, IN
(e) Indiana Insulated Wire, Inc.—Kendallville, IN
(f) O.E.M. Electric, Inc.—Kendallville, IN
(g) Automachine, Inc.—Albion, IN
(h) North Webster Products, Inc.—North Webster, IN
(i) Heaters, Inc.—North Webster, IN
(j) Hawkeye Products, Inc.—Murray, IA
(k) Pent, Inc.—Wolcottville, IN.
(l) Murray Products, Inc.—Murray, IA
(m) Jefferson Products, Inc.—Albion, IN
(o) Cromwell Products, Inc.—Cromwell, IN
(p) Albion Wire, Inc.—Albion, IN
(q) Ashley Products, Inc.—Ashley, IN
(r) Washington Products, Inc.—Cromwell, IN
(s) NEI Development Company, Inc.—Kendallville, IN
(t) Webster Wire Products, Inc.—North Webster, IN
(u) RAD, Inc.—Abion, IN
(v) Fine Wire, Inc.—South Milford, IN
(w) PVC Compounders, Inc.—Kendallville, IN

1. Parent corporation and address of principal office: The Standard Products Company, 2130 West 110th Street, Cleveland, Ohio 44102.

2. Wholly-owned subsidiaries which will participate in the operations and address of principal offices.

A. Standard Products Canada Ltd., 1030 Erie Street, Stratford, Ontario Canada N5A 6V7
B. Oliver Tire & Rubber Company, 1200 Sixty-fifth Street, Oakland, California 94662

Agatha L. Mergenovich,
Secretary.

[FR Doc. 80-37028 Filed 11-26-80; 8:45 am]
BILLING CODE 7035-01-M

Motor Carriers Finance Applications Decision-Notice

The following applications, filed on or after July 3, 1980, seek approval to consolidate, purchase, merge, lease operating rights and properties, or acquire control of motor carriers pursuant to 49 U.S.C. 11343 or 11344. Also, applications directly related to these motor finance applications (such as conversions, gateway eliminations, and securities issuances) may be involved.

The applications are governed by Special Rule 240 of the Commission's Rules of Practice (49 CFR 110 240). An interim proposed final Rule 240 reflecting changes to comport with the Motor Carrier Act of 1980 was published in the July 3, 1980, Federal Register at 45 FR 45529 under Ex Parte 55 (Sub-No. 44), *Rules Governing Applications Filed By Motor Carriers Under 49 U.S.C. 11344 and 11349.* These rules provides among other things, that opposition to the granting of an application must be filed with the Commission in the form of verified statements within 45 days after the date of notice of filing of the application is published in the Federal Register. Failure seasonably to oppose will be construed as a waiver of opposition and participation in the proceeding. If the protest includes a request for oral hearing, the request shall meet the requirements of Rule 240(C) of the special rules and shall include the certification required.

Persons wishing to oppose an application must follow the rules under 49 CFR 1100.240(B). A copy of any application, together with applicant's supporting evidence, can be obtained from any applicant upon request and payment to applicant of $10.00, in accordance with 49 CFR 1100.240(A)(h).

Amendments to the request for authority will not be accepted after November 28, 1980. However, the Commission may modify the operating authority involved in the application to conform to the Commission's policy of simplifying grants of operating authority.

We find, with the exception of those applications involving impediments (e.g., jurisdictional problems, unresolved fitness questions, questions involving possible unlawful control, or improper divisions of operating rights) that each applicant has demonstrated, in accordance with the applicable provisions of 49 U.S.C. 11301, 11302, 11343, 11344, and 11349, and with the Commission's rules and regulations, that the proposed transaction should be authorized as stated below. Except where specifically noted this decision is neither a major Federal action significantly affecting the quality of the human environment nor does it appear to qualify as a major regulatory action under the Energy Policy and Conservation Act of 1975.

In the absence of legally sufficient protests as to the finance application *or* to any application directly related thereto filed on or before January 12, 1981 (or, if the application later becomes unopposed), appropriate authority will be issued to each applicant (unless the application involves impediments) upon compliance with certain requirements which will be set forth in a notification of effectiveness of this decision-notice. To the extent that the authority sought below may duplicate an applicant's existing authority, the duplication shall not be construed as conferring more than a single operating right.

Applicant(s) must comply with all conditions set forth in the grant or grants of authority within the time period specified in the notice of effectiveness of this decision-notice, or the application of a non-complying applicant shall stand denied.

Decided: November 20, 1980.

By the Commission, Review Board Number 5, Members Krock, Taylor and Williams. (Board Member Taylor votes to publish with impediments, stating that there are duplications between the rights to be transferred and those to be retained. Also, the transfer of the considered rights will recreate a gateway restruction in the operations Plymouth is authorized to perform, which the considered authority was initially granted to eliminate. There is no evidence of record to show that applicants have been moving traffic through the gateways sought to be eliminated or the traffic involved.)

MC-F-14460F, filed October 28, 1980. NELSON-WESTERBERG, INC. (Nelson) (1201 Arthur Avenue, Elk Grove Village, IL 60007)—purchase (portion)—PLYMOUTH VAN LINES, INC. (Plymouth) (4433-41 Howley Street, Pittsburgh, PA 15224). Representative: Robert J. Gallagher, 1000 Connecticut Avenue, NW., Suite 1112, Washington, DC 20036. Nelson seeks authority to purchase a portion of the interstate operating rights of Plymouth. John R. Westerberg, the majority stockholder of Nelson, seeks authority to acquire control of said rights through the transaction. Nelson seeks authority to purchase that portion of Plymouth's Certificate No. MC-65748 (Sub-No. 5G), which authorizes the transportation, as a motor common carrier, over irregular routes, of *household goods,* as defined by the Commission, between points in IL, on the one hand, and, on the other, points in NJ. Nelson is authorized to operate as a common carrier pursuant to Certificate No. MC-52196 and authority awarded to Nelson in MC-F-14074F, which authorize the transportation of *household goods,* between points in Cook County, IL, on the one hand, and, on the other, points in MI, WI, IA, IN, and OH, and between Hackensack, NJ, and points in NJ within 60 miles thereof, on the one hand, and, on the other, points in CT, ME, MA, NY, PA, and RI.

Notes.—(1) Application for temporary authority has been filed. (2) A directly related gateway elimination application has been

filed in MC-52196 (Sub-No. 2F), published in the same Federal Register issue.

Decision-Notice

The following operating rights applications, filed on or after July 3, 1980, are filed in connection with pending finance applications under 49 U.S.C. 10926, 11343 or 11344. The applications are governed by Special Rule 247 of the Commission's General Rules of Practice (49 CFR 1100.247). Special Rule 247 was published in the Federal Register of July 3, 1980, at 45 FR 45539.

Persons wishing to oppose an application must follow the rules under 49 CFR 1100.247(B). Persons submitting protests to applications filed in connection with pending finance applications are requested to indicate across the front page of all documents and letters submitted that the involved proceeding is directly related to a finance application and the finance docket number should be provided. A copy of any application, together with applicant's supporting evidence, can be obtained from any applicant upon request and payment to applicant of $10.00.

Amendments to the request for authority are not allowed. However, the Commission may have modified the application to conform to the Commission's policy of simplifying grants of operating authority.

Findings: With the exceptions of those applications involving duly noted problems (e.g., unresolved common control, unresolved fitness questions, and jurisdictional problems) we find, preliminarily, that each applicant has demonstrated that its proposed service warrants a grant of the application under the governing section of the Interstate Commerce Act. Each applicant is fit, willing, and able properly to perform the service proposed and to conform to the requirements of Title 49, Subtitle IV, United States Code, and the Commission's regulations. Except where specifically noted, this decision is neither a major Federal action significantly affecting the quality of the human environment nor a major regulatory action under the Energy Policy and Conservation Act of 1975.

In the absence of legally sufficient protests in the form of verified statements as to the finance application *or* to the following operating rights applications directly related thereto filed on or before January 12, 1981 (or, if the application later becomes unopposed), appropriate authority will be issued to each applicant (except where the application involves duly noted problems) upon compliance with certain requirements which will be set forth in a notification of effectiveness of this decision-notice. Within 60 days after publication an applicant may file a verified statement in rebuttal to any statement in opposition.

Applicant(s) must comply with all conditions set forth in the grant or grants of authority within the time period specified in the notice by effectiveness of this decision-notice, or the application of a non-complying applicant shall stand denied.

To the extent that any of the authority granted may duplicate an applicant's other authority, the duplication shall be construed as conferring only a single operating right.

Dated: November 20, 1980.

MC 52196 (Sub-2F), filed October 28, 1980. Applicant: NELSON-WESTERBERG, INC.—GATEWAY ELIMINATION, 1201 Arthur Avenue, Elk Grove Village, IL 60007. Representative: Robert J. Gallagher, 1000 Connecticut Avenue NW., Suite 1200, Washington, DC 20036. To operate as a motor common carrier, in interstate or foreign commerce, over irregular routes, transporting *household goods* as defined by the Commission, between points in NJ, CT, ME, MA, NY, PA, and RI, on the one hand, and, on the other, points in IL, WI, IA, IN, OH, and MI.

Note.—This application is directly related to a finance proceeding in MC-F-14460F, published in this same Federal Register issue. The purpose of this application is to eliminate the gateways of Cook County, IL, and Hackensack, NJ, and points in NJ within 60 miles of Hackensack.

Agatha L. Mergenovich,

Secretary.

[FR Doc. 80-37025 Filed 11-26-80; 8:45 am]

BILLING CODE 7035-01-M

Motor Carrier Permanent Authority Decisions Notice

The following applications, filed on or after July 3, 1980, are governed by Special Rule 247 of the Commission's Rules of Practice, see 49 CFR 1100.247. Special rule 247 was published in the Federal Register of July 3, 1980, at 45 FR 45539.

Persons wishing to oppose an application must follow the rules under 49 CFR 1100.247(B). A copy of any application, together with applicant's supporting evidence, can be obtained from any applicant upon request and payment to applicant of $10.00.

Amendments to the request for authority are not allowed. Some of the applications may have been modified prior to publication to conform to the Commission's policy of simplifying grants of operating authority.

Findings

With the exception of those applications involving duly noted problems (e.g., unresolved common control, fitness, water carrier dual operations, or jurisdictional questions) we find, preliminarily, that each applicant has demonstrated its proposed service warrants a grant of the application under the governing section of the Interstate Commerce Act. Each applicant is fit, willing, and able to perform the service proposed, and to conform to the requirements of Title 49, Subtitle IV, United States Code, and the Commission's regulations. Except where noted, this decision is neither a major Federal action significantly affecting the quality of the human environment nor a major regulatory action under the Energy Policy and Conservation Act of 1975.

In the absence of legally sufficient protests in the form of verified statements filed on or before January 12, 1981 (or, if the application later becomes unopposed) appropriate authority will be issued to each applicant (except those with duly noted problems) upon compliance with certain requirements which will be set forth in a notice that the decision-notice is effective. Within 60 days after publication an applicant may file a verified statement in rebuttal to any statement in opposition.

To the extent that any of the authority granted may duplicate an applicant's other authority, the duplication shall be construed as conferring only a single operating right.

T4Note.—All applications are for authority to operate as a motor common carrier in interstate or foreign commerce over irregular routes, unless noted otherwise. Applications for motor contract carrier authority are those where service is for a named shipper "under contract".

Volume No. OPI-082

Decided: November 20, 1980.

By the Commission, Review Board Number 1, Members Carleton, Joyce and Jones.

MC 74321 (Sub-157F), filed November 12, 1980. Applicant: B.F. WALKER, INC., 1555 Tremont Pl., P.O. Box 17-B, Denver, CO 80217. Representative: Richard P. Kissinger, Steele Park, Suite 330, 50 South Steele St., Denver, CO 80209. Transporting *general commodities* (except used household goods, hazardous or secret materials, and sensitive weapons and munitions), for the United States Government, between points in the U.S.

MC 150200 (Sub-2F), filed November 6, 1980. Applicant: BRAVE TRANSPORT,

INC., 3181 Bankhead Highway, Room 100, Atlanta, GA 30318. Representative: Richard M. Tettelbaum, 3390 Peachtree Rd., NE., 5th Floor-Lenox Towers South, Atlanta, GA 30326. Transporting *general commodities* (except used household goods, hazardous or secret materials, and sensitive weapons and munitions), for the United States Government, between points in the U.S.

Volume No. OP2-101

Decided: November 19, 1980.

By the Commission, Review Board Number 2, members Chandler, Eaton, and Liberman.

MC 2202 (Sub-642F), filed November 3, 1980. Applicant: ROADWAY EXPRESS, INC., 1077 Gorge Blvd., P.O. Box 471, Akron, OH 44309. Representative: William O. Turney Suite 1010, 7101 Wisconsin Ave., Washington, DC 20014. Over regular routes, transporting *general commodities* (except classes A and B explosives and household goods as defined by the Commission), between Jacksonville and Palestine, TX, over U.S. Hwy 79, serving all intermediate points.

Note.—Applicant intends to tack this authority with its existing regular route authority.

MC 3062 (Sub-54F), filed November 3, 1980. Applicant: INMAN FREIGHT SYSTEM, INC., 321 North Spring Avenue, Cape Girardeau, MO 63701. Representative: G. H. Boles (same address as applicant). Transporting *lead, lead alloys, and zinc,* from Herculaneum, MO, to Atlanta, GA.

MC 4963 (Sub-128F), filed November 4, 1980. Applicant: JONES MOTOR CO., INC., Bridge St. and Schuylkill Rd., Spring City, PA 19475. Representative: Roland Rice, Suite 1301, 1600 Wilson Blvd., Arlington, VA 22209. Transporting *general commodities* (except household goods as defined by the Commission and Classes A and B explosives), between those points in the U.S. in and east of MN, IA, KS, MO, AR, and LA (except FL).

MC 20582 (Sub-9F), filed October 30, 1980. Applicant: HENRY H. STEVENS, INC., 1273 Broadway, Flint, MI 48506. Representative: Miss Wilhelmina Boersma, 1600 First Federal Bldg., Detroit, MI 48226. Transporting *household goods* as defined by the Commission, between points in ID, MT, ND, SD, and WY, on the one hand, and, on the other, points in the U.S. (except AK and HI).

MC 77972 (Sub-36F), filed October 31, 1980. Applicant: MERCHANTS TRUCK LINE, INC., P.O. Box 908, New Albany, MS 38652. Representative: Donald B. Morrison, P.O. Box 22628, Jackson, MS 39205. Transporting (1) *material handling equipment,* (2) *mobile home axles and mounted tires and rims,* (3) *iron and steel articles,* and (4) *parts, attachments, and accessories* for the commodities in (1) to (3) above, between points in the U.S. (except AK and HI), restricted to traffic originating at or destined to the facilities used by Continental Conveyor & Equipment Company, Inc.

MC 87103 (Sub—86F), filed November 3, 1980. Applicant: MILLER TRANSFER AND RIGGING CO,. P.O. Box 322, Cuyahoga Falls, OH 44222. Representative: Edward P. Bocko, P.O. Box 496, Mineral Ridge, OH 44440 Transporting (1) *metal working lathes, components tools* and *parts* for metal working lathes and components tools, (except commodities in bulk) and (2) *materials equipment, and supplies* used in the manufacture and distribution of the commodities in (1) above (except commodities in bulk), between points in Allen, Cuyahoga, and Hamilton Counties, OH, and Davidson County, TN, on the one hand, and, on the other, points in the U.S. (except AK and HI).

MC 98572 (Sub-80F), filed October 22, 1980. Applicant: SOUTHEAST TEX-PACK EXPRESS, INC., P.O. Box 47967, Dallas, TX 75247. Representative: Austin L. Hatchell, P.O. Box 2165, Austin, TX 78768. Over *regular routes,* transporting *general commodities* (except classes A and B explosives, household goods as defined by the Commission, commodities in bulk, and those requiring special equipment) (1) between Dallas and Waxahachie, TX, over (a) U.S. Hwy 77, and (b) Interstate Hwy 35, (2) between Waxahachie and Ennis, TX, over U.S. Hwy 287, (3) between Ennis and Richland, TX: from Ennis over U.S. Hwy 75 to junction TX Hwy 14, then over TX Hwy 14 to Richland, and return over the same route, (4) between Fairfield and Galveston, TX, over U.S. Hwy 75, (5) between Richland and Mexia, TX, over TX Hwy 14, (6) between Mexia and Fairfield, TX, over U.S. Hwy 84, (7) between Dallas and Jacksonville, TX, over U.S. Hwy 175, (8) between Jacksonville and Alto, TX, over U.S. Hwy 69, (9) between Alto and Nacogdoches, TX, over TX Hwy 21, (10) between Nacogdoches and Lufkin, TX, over U.S. Hwy 59, (11) between Lufkin and Kountze, TX, over U.S. Hwy 69, (12) between Kountze and Silsbee, TX, over TX Hwy 327, (13) between Silsbee and Beaumont, TX, over U.S. Hwy 96, (14) between Houston and Orange, TX, over U.S. Hwy 90, (15) between Beaumont and Port Arthur, TX, over (a) TX Hwy 347, and (b) over U.S. Hwy 69, (16) between Orange and Port Arthur, TX, over TX Hwy 87, (17) between Port Arthur and Winnie, TX, over TX Hwy 73, (18) between Winnie and Anahauc, TX: from Winnie over TX 124 to junction TX Hwy 65, then over TX Hwy 65 to Anahauc, and return over the same route, (19) between Houston and Madisonville, TX: (a) from Houston over Interstate Hwy 45 to junction TX Hwy 21, then over TX Hwy 21 to Madisonville, and return over the same route, and (b) over U.S. Hwy 75, (20) between junction U.S. Hwy 75 and TX Hwy 21, and Palestine, TX: from junction U.S. Hwy 75 and TX Hwy 21 over U.S. Hwy 75 to juction U.S. Hwy 287, then over U.S. Hwy 287 to Palestine, and return over the same route, (21) between junction Interstate Hwy 45 and TX Hwy 21, and junction Interstate Hwy 45 and U.S. Hwy 287, over Interstate Hwy 45, (22) between Corsicana and Athens, TX, over TX Hwy 31, (23) between Kemp and Rosser, TX: from Kemp over TX Hwy 274 to junction TX Farm Road 148, then over TX Farm Road 148 to Scurry, TX, then over TX Hwy 34 to Rosser, and return over the same route, (24) between Rosser and Trinidad, TX: from Rosser over TX Hwy 34 to junction TX Farm Road 148, then over TX Farm Road 148 to TX Hwy 274 to Trinidad, and over the same route, (25) between Trinidad and Mabank, TX: from Trinidad over TX Hwy 31 to Malakoff, then over TX Farm Road 85 to Mabank, and return over the same route, (26) between Athens and Murchison, TX, over TX Hwy 31, (27) between Corsicana and Purdon, TX: from Corsicana over TX Hwy 22 to junction TX Farm Road 1839, then over TX Farm Road 1839 to Emhouse, then over TX Farm Road 1126 to Barry, then over TX Hwy 22 to Blooming Grove, then over TX Farm Road 55 to junction TX Hwy 31, then over TX Hwy 31 to TX Farm Road 3194, then over TX Farm Road 3194 to Purdon, and return over the same route, (28) between junction TX Farm Road 3194 and TX Hwy 31, and Corsicana, over TX Hwy 31, (29) between Mexia and Shiloh, TX, over TX Farm Road 39, (30) between Palestine and Tucker, TX: (a) from Palestine over TX Hwy 19 to Montalba, then over TX Farm Road 321 to junction TX Farm Road 645 at Tennessee Colony, then over TX Farm Road 645 to Tucker, and return over the same route, and (b) over U.S. Hwy 79, (31) between Palestine and Neches, TX, over U.S. Hwy 79, (32) between junction TX Hwy 294 and U.S. Hwy 287, and Slocum, TX, over TX Hwy 294, (33) between Jacksonville and Mount Selman, TX, over U.S. Hwy 69, (34) between Jacksonville and New Summerfield, TX, over U.S. Hwy 79, (35) between junction TX Farm Road 1129 and TX Hwy 31, Roane, TX, over TX

Farm Road 1129, (36) between junction unnumbered Hwy and U.S. Hwy 69 north of Rusk, TX, and Rusk, TX: (a) from junction unnumbered Hwy and U.S. Hwy 69 over U.S. Hwy 69 to junction TX Farm Road 22, then over TX Farm Road 22 to junction TX Hwy 110, then over TX Hwy 110 to junction U.S. Hwy 84, then over U.S. Hwy 84 to Rusk, TX, and return over the same route, serving Gallatin, Turney, and Dialville, as intermediate points, and (b) over U.S Hwy 69, (37) between junction TX Hwy 110 and U.S. Hwy 84, and Sacul, TX: from junction TX Hwy 110 and U.S. Hwy 84 over U.S. Hwy 84 to Reklaw, then over TX Hwy 204 to Sacul, and return over the same route, (38) between Nacogdoches and Appleby, TX, over U.S. Hwy 59, (39) between Nacogdoches and Martinsville, TX, over TX Hwy 7, (40) between Nacogdoches and Melrose, TX, over TX Hwy 21, (41) between Buffalo and Jewett, TX, over U.S. Hwy 79, (42) between Centerville and Marquez, TX, over TX Hwy 7, (43) between Crockett and Kennard, TX, over TX Hwy 7, (44) between Lufkin and Wells, TX, over U.S. Hwy 69, (45) between Madisonville and Normangee, TX: from Madisonville over TX Hwy 21 to junction TX Farm Road 39, then over TX Farm Road 39 to Normangee, and return over the same route.

(46) between Madisonville and Midway, TX, over TX Hwy 21, (47) between Woodville and Chester, TX, over U.S. Hwy 287, (48) between Hillister and Spurger, TX, over TX Farm Road 1013, (49) between Silsbee and Kountze, TX, over TX Farm Road 418, (50) between Silsbee and Fred, TX, over TX Farm Road 92, (51) between Silsbee and Honey Island, TX: from Silsbee over TX Farm Road 418 to junction TX Farm Road 1293, then over TX Farm Road 1293 to Honey Island, and return over the same route, (52) between Spring and Tomball, TX, over TX Farm Road 2920, (53) between Liberty, TX and junction TX Farm Road 770 and U.S. Hwy 90: from Liberty over TX Hwy 146 to junction TX Farm Road 162, then over TX Farm Road 162 to junction TX Farm Road 770, then over TX Farm Road 770 to junction U.S. Hwy 90, and return over the same route, (54) between Winnie and Hamshire, TX, over (a) TX Hwy 73 and (b) TX Hwy 124, (55) between junction TX Hwy 61 and Interstate Hwy 10, and junction Interstate Hwy 10 and U.S. Hwy 90, over Interstate Hwy 10, (56) between Galveston and Port Bolivar, TX: from Galveston over Interstate Hwy 45 to junction TX Hwy 87, then over TX Hwy 87 to Port Bolivar, and return over the same route, (57) between junction Interstate Hwy 45 and TX Hwy 6, and Arcadia, TX, over TX Hwy 6, (58) between Dallas and Ennis, TX, over Interstate Hwy 45, (59) between Beaumont and Sour Lake, TX, over TX Hwy 105, (60) between Port Arthur and Sabine Pass, TX, over TX Hwy 87, (61) between Beaumont and Fannett, TX, over TX Hwy 124, (62) between junction TX Hwy 22 and TX Farm Road 1839, and Barry, TX, over TX Hwy 22, (63) between Conroe and Montgomery, TX, over TX Hwy 105W, (64) between Conroe and Security, TX, over TX Hwy 105E, (65) in connection with routes (19), (20), and (21) above, serving Conroe, New Waverly, Huntsville, Trinity, Groveton, Crockett, Pennington, and Lovelady, TX, as off-route points, and (66) serving all intermediate points in routes (1) through (64) above; restricted in (1) through (66) above against the transportation of packages or articles weighing in the aggregate more than 500 pounds from one consignor at one location to one consignee at one location on any one day.

MC 107012 (Sub-601F), filed November 6, 1980. Applicant: NORTH AMERICAN VAN LINES, INC., 5001 U.S. Hwy 30 West, P.O. Box 988, Fort Wayne, IN 46801. Representative: David D. Bishop (same as applicant). Transporting (1) *paper and paper products, and materials equipment, and supplies* used in the manufacture and distribution of paper and paper products, (2) *plastic and plastic products* (except commodities in bulk) and (3) *furniture,* (except commodities in bulk), between points in the U.S. (except AK and HI and except from the facilities of Scott Paper Co. in DE, ME, MA, NJ, NY, and PA, to those points in the U.S. in and east of ND, SD, NE, KS, OK and TX).

MC 112713 (Sub-316F), filed November 6, 1980. Applicant: YELLOW FREIGHT SYSTEM, INC., P.O. Box 7270, Overland Park, KS 66207. Representative: John M. Records (same address as applicant). Over regular routes transporting *general commodities* (except those of unusual value, household goods as defined by the Commission, classes A and B explosives, commodities in bulk, and those requiring special equipment), moving on bills of lading of freight forwarders as defined in 49 U.S.C. § 10102(8), (1) between Tampa and Miami, FL, over U.S. Hwy 41, and (2) between Naples and Port Everglades, FL, over FL Hwy 84, serving all intermediate points in (1) and (2) above.

Note.—Applicant intends to tack this authority with its existing authority in MC 112713.

MC 119522 (Sub-52F), filed October 31, 1980. Applicant: McLAIN TRUCKING, INC., 2425 Walton St., P.O. Box 2159, Anderson, IN 46011. Representative: John B. Leatherman, Jr. (same address as applicant). Transporting *general commodities* (except household goods as defined by the Commission and classes A and B explosives), between points in OH, and those in Marion County, IN.

MC 119493 (Sub-401F), filed October 31, 1980. Applicant: MONKEM COMPANY, INC., P.O. Box 1196, Joplin, MO 64801. Representative: Thomas D. Boone (Address same as applicant). Transporting *fertilizer compounds,* from Chicago Heights, IL, to Abilene and Lawrence, KS.

MC 120193 (Sub-3F), filed November 6, 1980. Applicant: C & M TRUCKING, INC. Castle Island Marine Terminal, South Boston, MA 02127. Representative: Frank J. Weiner, 15 Court Square, Boston, MA 02108. Transporting *motor vehicles,* in truckaway service, from points in Suffolk County, MA, to points in Albany, Rensselaer, Schenectady, Greene, Columbia, Dutchess, Ulster, Saratoga, and Washington Counties, NY. Condition: Issuance of this certificate is conditioned upon coincidental cancellation, at applicant's written request, of its certificate of registration in MC 120193 (Sub-1), issued October 14, 1963.

MC 124692 (Sub-346F), filed November 12, 1980. Applicant: SAMMONS TRUCKING, a corporation, P.O. Box 4347, Missoula, MT 59806. Representative: James B. Hovland, Suite M-20, 400 Marquette Ave., Minneapolis, MN 55401. Transporting *building materials,* from points in Koochiching County, MN, to points in AZ, NV, and CA.

MC 124692 (Sub-347F), filed November 6, 1980. Applicant: SAMMONS TRUCKING, P.O. Box 4347, Missoula, MT 59801. Representative: Donald W. Smith, P.O. Box 40248, Indianapolis, IN 46240. Transporting *heat exchangers and parts* for heat exchangers from Tulsa, OK, to points in the U.S.

MC 125023 (Sub-85F), filed October 31, 1980. Applicant: SIGMA-4 EXPRESS, INC., P.O. Box 9117, Erie, PA 16504. Representative: Richard C. McGinnis, 711 Washington Bldg., Washington, DC 20005. Transporting *general commodities* (except household goods as defined by the Commission and classes A and B explosives), between points in the U.S., restricted to traffic originating at or destined to the facilities of Hammermill Paper Company, Inc.

MC 126822 (Sub-107F), filed November 3, 1980. Applicant: WESTPORT

TRUCKING COMPANY, 15580 South 169 Highway, Olathe, KS 66061. Representative: John T. Pruitt (same address as applicant). Transporting (1) *glass*, and (2) *materials, equipment, and supplies* used in the manufacture and distribution of glass, between points in Macon County, IL, on the one hand, and, on the other, points in IA, KS, MN, MO, MT, NE, ND, SD, WI, and WY.

MC 126822 (Sub-108F), filed November 12, 1980. Applicant: WESTPORT TRUCKING COMPANY, a Missouri corporation, 15580 South 169 Highway, Olathe, KS 66061. Representative: John T. Pruitt (same address as applicant). Transporting *foodstuffs and beverages*, between points in Webb County, TX, on the one hand, and, on the other, points in IL, NJ, NY, and WI.

MC 136343 (Sub-228F), filed October 31, 1980. Applicant: MILTON TRANSPORTATION, INC., P.O. Box 355, Milton, PA 17847. Representative: Herbert R. Nurick, P.O. Box 1166, Harrisburg, PA 17120. Transporting *general commodities* (except classes A and B explosives, household goods as defined by the Commission, and commodities in bulk), between the facilities of Kimberly-Clark Corporation in AL, AR, CA, CT, MA, MI, MS, NJ, NY, NC, PA, OH, SC, TN, VA, and WI, on the one hand, and, on the other, points in the U.S. (except AK and HI).

MC 138575 (Sub-13F), filed November 3, 1980. Applicant: GWINNER OIL CO., INC., P.O. Box 38, Gwinner, ND 58040. Representative: James B. Hovland, Suite M-20, 400 Marquette Ave., Minneapolis, MN 55401. Transporting (1)(a) *agricultural machinery, industrial machinery, and construction machinery*, and (b) *parts and subassemblies* for the commodities in (1)(a) above, form points in Burleigh, Cass, Richland, and Sargent Counties, ND, to points in the U.S. (except AK and HI), and (2) *materials and supplies* used in the manufacture of the commodities in (1) above, in the reverse direction.

MC 142603 (Sub-32F), filed November 6, 1980. Applicant: CONTRACT CARRIERS OF AMERICA, INC., P.O. Box 1968, Springfield, MA 01101. Representative: Stephen J. Habash, 100 E. Broad St., Columbus, OH 43215. Transporting (1) *plastic film or sheeting*, and (2) *materials, equipment and supplies* used in the manufacture and distribution of the commodities in (1) above (except commodities in bulk) between points in the U.S., under continuing contract(s) with Resinite Division of Borden Chemical Company, Div. of Borden, Inc., of North Andover, MA.

MC 142603 (Sub-33F), filed November 6, 1980. Applicant: CONTRACT CARRIERS OF AMERICA, INC., P.O. Box 1968, Springfield, MA 01101. Representative: Stephen J. Habash, 100 E. Broad St., Columbus, OH 43215. Transporting *piece goods and wearing apparel*, between points in the U.S., under continuing contract(s) with N. Edelson Sons Corporation, of New York, NY.

MC 142603 (Sub-34F), filed November 6, 1980. Applicant: CONTRACT CARRIERS OF AMERICA, INC., P.O.Box 1968, Springfield, MA 01101. Representative: Stephen J. Habash, 100 East Broad Street, Columbus, OH 43215. Transporting *general commodities* (except household goods as defined by the Commission and Classes A and B explosives) between points in the U.S., under continuing contract(s) with Gulf & Western Industries, Inc., of New York, NY.

MC 143002 (Sub-22F), filed November 12, 1980. Applicant: C.D.B., INCORPORATED, 155 Spaulding, S.E., Grand Rapids, MI 49506. Representative: Karl L. Gotting, 1200 Bank of Lansing Building, Lansing, MI 48933. Transporting *such commodities* as are dealt in by manufacturers of applicances, between points in the U.S., under continuing contract(s) with the Gibson Appliance Corporation, of Greenville, MI.

MC 144393 (Sub-2F), filed November 7, 1980. Applicant: BORDER DISTRIBUTING COMPANY, 7800 South Angora (P.O. Box 4423), El Paso, TX 79914. Representative: Mr. Gene Crutcher (address same as applicant). Transporting *food, in containers, and meat, meat products and meat by-products, and articles distributed by meat-packing houses*, as described in Sections A and C of Appendix I to report in *Descriptions in Motor Carrier Certificates*, 61 M.C.C. 209 and 766, between Kansas City, MO, and points in AZ, CA, CO, ID, KS, NV, NM, OK, OR, TX, UT, and WA.

MC 144452 (Sub-21F), filed November 4, 1980. Applicant: ARLEN LINDQUIST d.b.a. ARLEN E. LINDQUIST TRUCKING 7192 Davenport Street, NE., Minneapolis, MN 55434. Representative: William J. Gambucci, Suite M-20 400 Marquette Ave., Minneapolis, MN 55401. Transporting *petroleum automotive chemicals, cleaning compounds, and such commodities* as are dealt in or used by automotive service centers and distributors of petroleum products, (1) between points in OK, on the one hand, and, on the other, points in MN, ND, and SD; and (2) between points in Cook County, IL, on the one hand, and, on the other, points in AR, CO, IL, IN, IA, KY, KS, LA, MI, MN, MO, MT, NE, PA, SD, TN, TX, WI and WY.

MC 144483 (Sub-6F), filed October 31, 1980. Applicant: MAHER, INC., R. R. No. 14, Box 330, West Terre Haute, IN 47885. Representative: Norman R. Garvin, 1301 Merchants Plaza, East Tower Indianapolis, IN 46204. Transporting *liquefied petroleum gas, and materials, equipment and supplies* used in the manufacture and distribution of liquefied petroleum gas, between points in the U.S., under continuing contract(s) with Pyrofax Gas Corp., of Houston, TX. Condition: Any permit issued in this proceeding shall be limited in term to a period expiring 5 years from its date of issue.

MC 144622 (Sub-192F), filed November 6, 1980. Applicant: GLENN BROTHERS TRUCKING, INC., P.O. Box 9343, Little Rock, AR 72219. Representative: J. B. Stuart, P.O. Box 179, Bedford, TX 76021. Transporting *general commodities* (except household goods as defined by the Commission and classes A and B explosives), from the facilities of The Charter Oak Shippers Cooperative Association, Inc., and its members, in CT, MA, RI, NY, and NJ, to points in the U.S.

MC 144622 (Sub-194F), filed November 4, 1980. Applicant: GLENN BROTHERS TRUCKING, INC., P.O. Box 9343, Little Rock, AR 72219. Representative: J. B. Stuart, P.O. Box 179, Bedford, TX 76021. Transporting *such commodities* as are dealt in or used by hardware stores, drug stores, discount stores, grocery stores, and food business houses, (a) between the facilities of Grocery Store Products, in Chester County, PA, on the one hand, and, on the other, points in CA, MO, and TX, (b) between the facilities of The Clorox Copany, in Cook County, IL, on the one hand, and, on the other, points in CA and TX, and (c) between the facilities of The Clorox Company, in Clayton County, GA, on the one hand, and, on the other, points in CA and MO.

MC 144622 (Sub-195F), filed November 3, 1980. Applicant: GLENN BROTHERS TRUCKING, INC., P.O. Box 9343, Little Rock, AR 72219. Representative: J. B. Stuart, P.O. Box 179, Bedford, TX 76021. Transporting: *such commodities* as are dealth in by discount and variety stores, (1) between points in AL, AR, IL, KS, KY, LA, MS, MO, OK, TN, and TX; and (2) between points in MN, MI, WI, PA, NY, CT, RI, MA, ME, MD, NJ, WV, VA, NC, and SC, on the one hand, and, on the other, points in AR and TX.

MC 144622 (Sub-196F), filed October 20, 1980. Applicant: GLENN BROTHERS TRUCKING, INC., P.O. Box 9343, Little

Rock, AR 72219. Representative: J. B. Stuart, P.O. Box 179, Bedford, TX 76021. Transporting (1) *foodstuffs*, and (2) *materials, equipment, and supplies* used in the manufacture and distribution of foodstuffs, between Clearfield, UT, Lewiston and American Falls, ID, and points in CA, OR, and WA, on the one hand, and, on the other, those points in the U.S. on and east of U.S. Hwy 85.

MC 147723 (Sub-3F), filed October 31, 1980. Applicant: E. B. COMPANY, a corporation, 5100 West 164th St., Brook Park, OH 44142. Representative: Andrew Jay Burkholder, 275 East State St., Columbus, OH 43215. Transporting (1) *Chemicals* (except commodities in bulk), and (2) *Materials, equipment, and supplies* used in the manufacture and distribution of the commodities in (1) above (except commodities in bulk), between points in Los Angeles County, CA, Essex County, NJ, DeKalb County, GA, and Cuyahoga County, OH, on the one hand, and, on the other, points in the U.S. (except AK and HI).

MC 147993 (Sub-5F), filed November 7, 1980. Applicant: C. H. MASLAND & SONS, 50 Spring Rd., Box 40, Carlisle, PA 17013. Representative: J. Roger Gratz (same address as applicant). Transporting *materials, equipment, and supplies* used in the manufacture and distribution of pneumatic tires, tubes, rubber roofing materials, and radiator hose, between points in the U.S., under continuing contract(s) with Carlisle Tire & Rubber Company, of Carlisle, PA.

MC 148283 (Sub-10F), filed November 7, 1980. Applicant: ABC TRANSPORTATION COMPANY, a corporation, State Docks Rd., Eufaula, AL 36027. Representative: Thomas E. James, P.O. Box 270535, Dallas, TX 75227.Transporting *lumber, wood products, and wood articles,* between points in the U.S., under continuing contract(s) with Intermountain-Orient, Inc., of Boise, ID.

MC 148522 (Sub-8F), filed October 30, 1980. Applicant: PAUL E. ACE TRUCKING, INC., 930 Clay Ave., Stroudsburg, PA 18360. Representative: Joseph A. Keating, Jr., 121 S. Main St., Taylor, PA 18517. Transporting (1) *corrugated fiberboard products,* from Willamsport, PA, to points in MA, CT, NY, MD, NJ, and PA, and (2) *materials, equipment, and supplies* used in the manufacture and distribution of the commodities in (1) above, in the reverse direction.

MC 148773 (Sub-3F), filed October 31, 1980. Applicant: A.F.L. TRUCK LINES, INC., 3661 West Blue Heron Blvd., Riviera Beach, FL 33404. Representative: Anthony E. Young, Suite 350, 29 South LaSalle Street, Chicago, IL 60603. Transporting *building materials, lumber, and plywood,* between points in the U.S., under continuing contract(s) with Plywoods Distributing, Inc., of Wheaton, IL.

MC 148822 (Sub-7F), filed November 11, 1980. Applicant: SUPER TRUCKERS, INC., 3900 Commerce Ave., Fairfield, AL 35064. Representative: Gerald D. Colvin, Jr., Birmingham, AL 35203. Transporting (1) *flat glass,* and (2) *materials, equipment and supplies* used in the manufacture, installation, and distribution of flat glass, between points in the U.S., under continuing contract(s) with Laminated Glass Corporation, of Detroit, MI, and Consolidated Eastern Industries, of Telford, PA.

MC 150542 (Sub-2F), filed November 6, 1980. Applicant: RIDGEFIELD PARK TRANSPORT CO., INC., 106 Teaneck Road, Ridgefield Park, NJ 07660. Representative: Michael R. Werner, 167 Fairfield Road, P.O. Box 1409, Fairfield, NJ 07006. Transporting *general commodities* (except classes A and B explosives and household goods as defined by the Commission), between points in the U.S., under a continuing contract(s) with Pepsi-Cola Company, Diversified Containers, Inc., and Pepsi-Cola Metropolitan Bottling Co., Inc., of Purchase, NY.

MC 150812 (Sub-1F), filed November 31, 1980. Applicant: FROST TRANSPORTATION, INC., P.O. Box 3400, Shreveport, LA 73303. Representative: Joseph A. Keating Jr., 121 S. Main St., Taylor, PA 18517. Transporting *general commodities* (except household goods as defined by the Commission, classes A and B explosives, commodities in bulk, and those requiring special equipment), between points in the U.S., under continuing contract(s) with Gould, Inc., of Rolling Meadows, IL.

MC 151282 (Sub-1F), filed November 31, 1980. Applicant: WAYNE TRANSPORT, INC., 1790 Spruce St., Defiance, OH 43512. Representative: Keith D. Warner (address same as applicant). Transporting (1) *iron and steel articles,* and (2) *materials and supplies* used in the manufacture and distribution of iron and steel articles, between points in the U.S., under continuing contract(s) with Defiance Steel Co., Inc., of Defiance, OH, and SOCOR Incorporated, of Continential, OH. Condition: The person or persons who appear to be engaged in common control of applicant and another regulated carrier must either file an application under 49 U.S.C. 11343 or submit an affidavit indicating why such approval is unnecessary.

MC 152252 (Sub-2F), filed November 6, 1980. Applicant: CONSOLIDATED PRODUCTIONS, INC., 333 North Foothill Road, Beverly Hills, CA 90210. Representative: Ira S. Rubin, One Wilshire Bldg. Suite 1600, Los Angeles, CA 90017. Transporting *such commodities* as are dealt in or used by manufacturers and distributors of theatrical, stage, trade, and industrial shows and productions, between points in the U.S.

MC 152503F, filed October 22, 1980. Applicant: R. J. ESPOSITO TRUCKING CO., 210 Depot Rd., P.O. Box 3205, Milford, CT 06460. Representative: Walter L. Weart, 548 Anita St., Des Plaines, IL 60016. Transporting *general commodities,* (except household goods as defined by the Commission, and classes A and B explosives), between points in ME, NH, VT, CT, RI, MA, PA, NY, NJ, MD, DE, and DC.

MC 152512F, filed October 28, 1980. Applicant: CARL MARTINO, d.b.a. C. CARL DELIVERY SERVICE, 101 Kimberry County, Rolling Meadows, IL 60008. Representative: Themis N. Anastos, 120 West Madison St., Chicago, IL 60602. Transporting *plastic and plastic products, and pulp board,* from points in Cook and McHenry Counties, IL, to points in Milwaukee, Racine, and Kenosha Counties, WI.

MC 152543 (Sub-1F), filed November 5, 1980. Applicant: J & S TRANSPORTATION, INC., 1015 North Street, Conyers, GA 30207. Representative: J. L. Fant, P.O. Box 577, Jonesboro, GA 30237. Transporting *liquid chemicals,* in bulk, in tank vehicles, between points in Fulton, DeKalb, Cobb, Clayton, Gwinnett and Rockdale Counties, GA, on the one hand, and, on the other, points in AL, AR, DE, FL, GA, IL, KY, LA, MS, NJ, NY, NC, OH, OK, PA, SC, TN, TX, VA and WV.

MC 152562F, filed October 30, 1980. Applicant: P.P.M. CARRIERS, INC., 18 Hackensack Ave., S. Kearny, NJ 07032. Representative: Robert A. Russell, 300 Main St., Hackettstown, NJ 07804. Transporting *waste products and materials for recycling,* between points in NJ, NY, IA, IN, LA, TX, MS, OK, AL, AR, MO, NE, MI, and WI.

Volume No. OP3–081

Decided November 18, 1980.

By the Commission, Review Board Number 2, Members Chandler, Eaton, and Liberman. Member Eaton not participating.

MC 1824 (Sub-128F), filed November 3, 1980. Applicant: PRESTON TRUCKING COMPANY, INC., 151 Easton Blvd., Preston, MO 21655. Representative: C. S. Perry (same address as applicant).

Transporting *general commodities*, except household goods as defined by the Commission, and classes A and B explosives), serving Wentzville, MO, as an off-route point in connection with carrier's presently authorized regular routes.

MC 60014 (Sub-197F), filed November 6, 1980. Applicant: AERO TRUCKING, INC., P.O. Box 308, Monroeville, PA 15146. Representative: A. Charles Tell, 100 E. Broad St., Columbus, OH 43215. Transporting (1) *building materials, insulating materials, pipe, and refractory products*, and (2) *materials and supplies* used in the manufacture of the commodities in (1), between points in the U.S., restricted to traffic originating at or destined to the facilities of Johns-Manville Sales Corporation.

MC 96324 (Sub-44F), filed November 4, 1980. Applicant: GENERAL DELIVERY, INC., P.O. Box 1816, Fairmont, WV 26554. Representative: Harold G. Hernly, Jr., 110 S. Columbus St., Alexandria, VA 22314. Transporting *general commodities* (except those of unusual value, classes A and B explosives, household goods as defined by the Commission, commodities in bulk, and those requiring special equipment), between points in KS and TX and those points in the U.S., in and east of MN, IA, MO, AR, and LA, restricted to traffic originating at or destined to the facilities of International Paper Company and its subsidiaries.

MC 99535 (Sub-2F), filed October 27, 1980. Applicant: STEVEN FREIGHT SERVICE CO., INC., 16 Sturtevant St., Sommerville, MA 02145. Representative: Robert L. Cope, Suite 501, 1730 M St., NW., Washington, DC 20036. Transporting *general commodities* (except household goods as defined by the Commission and classes A and B explosives), between points in MA. Condition: Issuance of a certificate is conditioned upon prior or coincidental cancellation of Certificate of Registration MC 99535 (Sub-1), at applicant's written request.

Note.—The purpose of this application is to convert a registered certificate into a certificate of public convenience and necessity. Applicant is relying upon traffic studies to support this grant of authority.

MC 99535 (Sub-3F), filed October 27, 1980. Applicant: STEVEN FREIGHT SERVICE CO., INC., 16 Sturtevant St., Sommerville, MA 02145. Representative: Robert L. Cope, Suite 501, 1730 M St., NW., Washington, DC 20036. Transporting *general commodities* (except household goods as defined by the Commission, and classes A and B explosives), between points in the U.S., under continuing contract(s) with Lever Brothers Company, of New York, NY.

MC 107295 (Sub-1002F), filed November 6, 1980. Applicant: PRE-FAB TRANSIT CO., a corporation, P.O. Box 146, Farmer City, IL 61842. Representative: Duane Zehr (same address as applicant). Transporting (1) *lighting products*, from Crawfordsville, IN and Vermillion, OH, to points in the U.S., (except AK and HI); and (2) *material, equipment and supplies* used in the manufacture and distribution of lighting products, in the reverse direction.

MC 107295 (Sub-1003F), filed November 6, 1980. Applicant: PRE-FAB TRANSIT CO., a corporation, P.O. Box 146, Farmer City, IL 61842. Representative: Duane Zehr (same address as applicant). Transporting *general commodities* (except those of unusal value, classes A and B explosives, household goods as defined by the Commission and commodities in bulk), between points in the U.S.

MC 107515 (Sub-1393F), filed November 3, 1980. Applicant: REFRIGERATED TRANSPORT CO., INC., P.O. Box 308, Forest Park, GA 30050. Representative: Bruce E. Mitchell, 3390 Peachtree Rd., NE., 5th Floor, Lenox Towers South, Atlanta, GA 30326. Transporting (1) *automotive supplies*, and (2) *materials, equipment, and supplies* used in the manufacture and distribution of the commodities in (1) (except commodities in bulk), between the facilities of or used by Union Carbide Corporation, on the one hand, and, on the other, points in the U.S. (except AK and HI).

MC 109634 (Sub-9F), filed November 6, 1980. Applicant: TRAILER CONVOYS, INC., 1248 Highway 31, Jeffersonville, IN 47130. Representative: Donald W. Smith, P.O. Box 40248, Indianapolis, IN 46240. Transporting (1) *trailers and trailer chassis*, and (2) *materials, equipment, and supplies* used in the manufacture of the commodities in (1), between points in the U.S., under continuing contract(s) with Merritt Equipment Company, of Portland, OR.

MC 116014 (Sub-90F), filed October 30, 1980. Applicant: OLIVER TRUCKING CO., INC., P.O. Box 53, Winchester, KY 40391. Representative: Louis J. Amato, P.O. Box E, Bowling Green, KY 42101. Transporting *general commodities* (except household goods as defined by the Commission, and classes A and B explosives), between points in AL, AR, GA, IL, IN, KY, MD, MI, MS, MO, NC, OH, OK, PA, SC, TN, VA, WV, WI, and NY.

MC 121664 (Sub-135F), filed November 4, 1980. Applicant: HORNADY TRUCK LINE, INC., P.O. Box 846, Monroeville, AL 36460. Representative: William E. Grant, 1702 1st Ave. South, Birmingham, AL 35233. Transporting (1) *forest products, lumber and wood products, pulp, paper or allied products*, as described in Items 08, 24, and 26 of the Standard Transportation Commodity Code Tariff, and (2) *materials, equipment, and supplies* used in the manufacture of the commodities in (1), between those points in the U.S. in and east of ND, SD, NE, KS, OK, and TX.

MC 123255 (Sub-224F), filed November 6, 1980. Applicant: B & L MOTOR FREIGHT, INC., 1984 Coffman Rd, Newark, OH 43055. Representative: C. F. Schnee, Jr. (same address as applicant). Transporting *general commodities* (except classes A and B explosives and household goods as defined by the Commission), between the facilities of the United States Gypsum Company, in the U.S., on the one hand, and, on the other, points in the U.S. (except AK and HI).

MC 130485 (Sub-1F), filed October 31, 1980. Applicant: TRAVELCENTER, INC., 4500 Perkiomen Ave., Reading PA 19606. Representative: Lawrence E. Lindeman, 425 13th St. NW., Suite 1032, Washington, DC 20004. As a *broker*, at Harrisburg, Reading, Lebanon, Scranton, York, Pottsville, Hazleton, Wilkes-Barre, and Selingsgrove, PA, in arranging for the transportation of *passengers and their baggage*, in special and charter operations, between points in the U.S. Condition: Issuance of a broker certificate in this proceeding is conditioned upon prior or coincidental cancellation of MC 130485, at applicant's written request.

MC 134035 (Sub-44F), filed November 6, 1980. Applicant: DOUGLAS TRUCKING COMPANY, a corporation, P.O. Box 698, Highway 75 South, Corsicana, TX 75110. Representative: Jack K. Williams, P.O. Box 698, Corsicana, TX 75110. Transporting (1) *fireworks*, and (2) *materials, supplies and equipment* used in the manufacture of fireworks, between points in Chaves County, NM, San Bernardino and Los Angeles Counties CA, El Paso, Bexar and Tarrant Counties, TX, Tulsa County, OK, Lowndes County, MS, Hamilton County, TN and Montgomery County, PA, on the one hand, and, on the other, points in the U.S. (except AK and HI). Condition: To the extent the certificate in this proceeding authorizes classes A and B explosives it shall expire 5 years from its date of issuance.

MC 135895 (Sub-114F), filed November 3, 1980. Applicant: B & R DRAYAGE,

INC., P.O. Box 8543, Battlefield Station, Jackson, MS 39204. Representative: Douglas C. Wynn, P.O. Box 1295, Greenville, MS 38701. Transporting *foodstuffs* and *equipment, materials and supplies* used in the manufacture, sale, and distrubution of foodstuffs (except commodities in bulk and those requiring special equipment), between the facilities of Blasic Foods, Inc., at (1) Greenville, MS, Imaly City, Bridgeport, and Memphis, MI, and (3) Millsboro, DE, on the one hand, and, on the other, those points in the U.S. in and east of ND, SD, NE, CO, and NM.

MC 136384 (Sub-25F), filed November 3, 1980. Applicant: PALMER MOTOR EXPRESS, INC., P.O. Box 103, Savannah, GA 31402. Representative: Virgil H. Smith, Suite 12, 1587 Phoenix Boulevard, Atlanta, GA 30349. Transporting (1) *paper and paper products,* from the facilities of Union Camp Corp., at or near Savannah and Tifton, GA, to points in IN and IL; and (2) *materials, equipment, and supplies* used in the manufacture and distribution of the commodities in (1), in the reverse direction.

MC 136545 (Sub-34F), filed November 3, 1980. Applicant: NUSSBERGER BROS. TRUCKING CO., INC., 929 Railroad Street, Prentice, WI 54556. Representative: Richard A. Westley, 4506 Regent Street, Suite 100, Madison, WI 53705. Transporting *lumber products, wood products,* and *building materials,* between points in WI, on the one hand, and, on the other, points in the U.S.

MC 138714 (Sub-8F), filed November 4, 1980. Applicant: VIRGINIA TRANSPORTATION, INC., Box 26449, Richmond, VA 23261. Representative: Eric Meierhoefer, Suite 423, 1511 K Street, NW., Washington, DC 20005. Transporting *general commodities* (except classes A and B explosives and household goods as defined by the Commission), between points in the U.S., under continuing contract(s) with Wards Company, Inc., of Richmond, VA. and its subsidiaries.

MC 141914 (Sub-94F), filed November 3, 1980. Applicant: FRANKS AND SON, INC., Route 1, Box 108A, Big Cabin, OK 74332. Representative: Kathrena J. Franks (same address as applicant). Transporting *general commodities* (except classes A and B explosives and household goods as defined by the Commission), between points in the U.S. (except AK and HI), restricted to traffic originating at or destined to the facilities of Brunswick Corporation.

MC 142254 (Sub-7F), filed November 3, 1980. Applicant: FRIEDL FUEL & CARTAGE, INC., 440 West Ann Street, Whitewater, WI 53190. Representative: Michael J. Wyngaard, 150 East Gilman Street, Madison, WI 53703. Transporting (1) *pipe,* and (2) *materials, equipment or supplies* used in the manufacture, sale, and distribution of pipe, between East Troy, WI, on the one hand, and, on the other, points in AR, CO, DE, IA, IL, IN, KS, KY, LA, MD, MI, MN, MO, MS, NC, ND, NE, NJ, NY, OH, OK, PA, SD, TN, TX, VA, and WV.

MC 145664 (Sub-33F), filed November 3, 1980. Applicant: STALBERGER, INC., 223 S. 50th Ave. W., Duluth, MN 55807. Representative: Norman A. Cooper, 145 W. Wisconsin Ave., Neenah, WI 54956. Transporting (1) *forest products,* (2) *lumber and wood products* (except furniture), and (3) *materials, equipment, and supplies* used in the manufacture, sale and distribution of the commodities in (1) and (2) above, (a) between points in MN, on the one hand, and, on the other, points in the U.S. and (b) from ports of entry on the international boundary line between the U.S. and Canada (except those in MN), to points in the U.S.

MC 146075 (Sub-3F), filed November 6, 1980. Applicant: TEXAS INTERMOUNTAIN TRANSPORTATION, INC., 6161 West 29th Place, Wheatridge, CO 80214. Representative: Delbert Ewing (same address as applicant). Transporting *general commodities* (except household goods as defined by the Commission, commodities in bulk, and classes A and B explosives), between points in AR, CO, ID, LA, MT, NM, OK, TX, UT, and WY, restricted to traffic originating at or destined to facilities used by Ralston Purina Company.

MC 146985 (Sub-4), filed October 31, 1980. Applicant: MIDWEST EASTERN TRANSPORT, INC., 731 South Main Street, P.O. Box 1614, Elkhart, IN 46515. Representative: Phillip A. Renz, Suite 200, Metro Building, Fort Wayne, IN 46802. Transporting (1) *drugs and chemicals,* and (2) *materials, equipment, and supplies* used in the manufacture and distribution of the commodities in (1) above, between points in the U.S., under continuing contract(s) with Miles Laboratories, Inc., of Elkhart, IN.

MC 146985 (Sub-6F), filed November 6, 1980. Applicant: MIDWEST EASTERN TRANSPORT, INC., 731 South Main Street, P.O. Box 1614, Elkhart, IN 46514. Representative: Phillip A. Renz, Suite 200, Metro Building, Fort Wayne, IN 46802. Transporting *general commodities* (except household goods as defined by the Commission, and classes A and B explosives between points in the U.S., under continuing contract(s) with Great Lakes Terminal & Transport Corporation, of Chicago, IL.

MC 148314 (Sub-6F), filed November 3, 1980. Applicant: INTER-FREIGHT TRANSPORTATION, INC., 655 East 114th Street, Chicago, IL 60628. Representative: Joel H. Steiner, 39 South LaSalle Street, Suite 600, Chicago, IL 60603. Transporting *silicon carbide and silicon carbide briquettes,* between Milwaukee, WI, Saginaw, MI, and Birmingham, AL, on the one hand, and, on the other, points in the U.S. in and east of ND, SD, NE, CO, and NM.

MC 151344 (Sub-1F), filed October 31, 1980. Applicant: MICHAEL T. SPENCER, d/b/a MIKE SPENCER TRUCKING, P.O. Box 996, Yuba City, CA 95991. Representative: Ronald C. Chauvel, 100 Pine St., Suite 2550, San Francisco, CA 94111. Transporting *salt and salt products,* between points in the U.S., under continuing contract(s) with Leslie Salt Company, of Newark, CA

MC 152324 (Sub-1F), filed October 30, 1980. Applicant: CARTWRIGHT MOVING & STORAGE CO., INC. 11901 Cartwright Avenue, Grandview, MO 64030. Representative: Alex M. Lewandowski, 1221 Baltimore Avenue, Suite 600, Kansas City, MO 64105. Transporting *general commodities* (except classes A and B explosives), between points in the U.S., under continuing contract(s) with the Jones Store Company, of Kansas City, MO.

Volume No. OP3–087

Decided: November 20, 1980.

By the Commission, Review Board Number 3, Members Parker, Fortier, and Hill.

MC 14314 (Sub-44F), filed November 10, 1980. Applicant: DUFF TRUCK LINE, INC., P.O. Box 359, Broadway and Vine Sts., Lima, OH 45802. Representative: R. L. Anderhalt, Jr. (same address as applicant). Over regular routes, transporting *general commodities* (except those of unusual value, classes A and B explosives, household goods as defined by the Commission, commodities in bulk, and those requiring special equipment), (1) between Cincinnati, OH, and Somerset, KY, over U.S. Hwy 27, (2) between Dale, IN, and Bowling Green, KY, over U.S. Hwy 231, (3) between Evansville, IN, and Hopkinsville, KY, over U.S. Hwy 41, (4) between Cynthiana, KY, and Paducah, KY, over U.S. Hwy 62, (5) between Louisville, KY, and Ashland, KY, over U.S. Hwy 60, (6) between Hopkinsville, KY, and Somerset, KY, from Hopkinsville over U.S. Hwy 68 to junction KY Hwy 80, then over KY Hwy 80 to Somerset, and return over the same route, (7) between Cincinnati, OH, and Lexington, KY, over Interstate Hwy 75, (8) between Cincinnati, OH, and Louisville, KY, over Interstate Hwy 71,

(9) between Indianapolis, IN, and Bowling Green, KY, over Interstate Hwy 65, (10) between St. Louis, MO, and Louisville, KY, over Interstate Hwy 64, (11) between Salem, IL, and Paducah, KY, from Salem over Interstate Hwy 57 to junction Interstate Hwy 24, then over Interstate Hwy 24 to Paducah, and return over the same route, (12) on routes (1) through (6), serving all intermediate points, and off-route points in Adair, Anderson, Barren, Bath, Boone, Bourbon, Boyd, Boyle, Bracken, Breckinridge, Bullitt, Butler, Caldwell, Calloway, Campbell, Carroll, Carter, Casey, Christian, Clark, Crittendon, Daviess, Edmonson, Fayette, Fleming, Franklin, Gallatin, Garrard, Grant, Graves, Grayson, Green, Greenup, Hancock, Hardin, Harrison, Hart, Henderson, Henry, Hopkins, Jefferson, Jessamine, Kenton, Larue, Lewis, Lincoln, Livingston, Logan, Lyon, McCracken, McLean, Madison, Marion, Marshall, Mason, Meade, Mercer, Metcalfe, Montgomery, Muhlenberg, Nelson, Nicholas, Ohio, Oldham, Owen, Pendleton, Pulaski, Robertson, Rowan, Russell, Scott, Shelby, Simpson, Spencer, Taylor, Todd, Trigg, Trimble, Union, Warren, Washington, Webster, and Woodford Counties, KY, and (13) in routes (7) through (11) serving no intermediate points, but for operating convenience only.

Note.—Applicant intends to tack this authority with its existing regular-route authority.

MC 114284 (Sub-97F), filed November 11, 1980. Applicant: FOX-SMYTHE TRANSPORTATION CO., a corporation, P.O. Box 82307, Oklahoma City, OK 73148. Representative: William B. Barker, 641 Harrison St., P.O. Box 1979, Topeka, KS 66601. Transporting *meats, meat products, and meat byproducts, and articles distributed by meat-packing houses,* as described in Sections A and C of Appendix I to the report in *Descriptions in Motor Carrier Certificates,* 61 M.C.C. 209 and 766 (except hides and commodities in bulk), from Los Angeles, CA, to points in CA, AR, IL, IA, KS, MO, NE, OK, and TX.

MC 123744 (Sub-92F), filed November 10, 1980. Applicant: BUTLER TRUCKING CO., P.O. Box 88, Woodland, PA 16881. Representative: Dwight L. Koerber, Jr., P.O. Box 1320, 110 N. 2nd St., Clearfield, PA 16830. Transporting (1) *refractories and refractory materials,* and (2) *iron and steel articles,* between Chciago, IL, on the one hand, and, on the other, points in IL, OH, PA, WV, NY, MD, VA, DE, and NJ.

MC 140484 (Sub-83F), filed November 10, 1980. Applicant: LESTER COGGINS TRUCKING, INC., P.O. Box 69, Fort Myers, FL 33902. Representative: Frank T. Day (same address as applicant). Transporting *fresh and frozen meats, meat products, meat by-products, and articles distributed by meat packinghouses,* as described in Sections A, B, and C of Appendix I to the report in *Descriptions in Motor Carrier Certificates,* 61 M.C.C. 209 and 766 (except hides and commodities in bulk), and *foodstuffs,* from points in AL, GA, CO, IL, IA, KS, LA, MA, MD, MS, NE, NY, PA, TX, TN, and WI to points in FL on and south of FL Hwy 50.

MC 142245 (Sub-6F), filed November 10, 1980. Applicant: NATIONWIDE TRUCK BROKERS, INC., 5475 Clay Ave. SW., Grand Rapids, MI 49508. Representative: Edward Malinzak, 900 Old Kent Bldg., Grand Rapids, MI 49503. Transporting (1) *apple juice, apple cider and vinegar and other apple products and (2) glass and paper containers* (except in bulk), between points in the U.S. (except AK and HI), under continuing contract(s) with Indian Summer, Incorporated.

MC 151244 (Sub-1F), filed November 11, 1980 Applicant: EDWARD YELLI, d.b.a. E & E TRUCKING, Ewing, NE 68735. Representative: James F. Crosby, James F. Crosby & Associates, 7363 Pacific St., #210B, Omaha, NE 68114. Transporting *disposable syringes,* and *needles,* from points in Madison and Stanton Counties, NE to points in CA.

MC 152365 (Sub-1F), filed November 10, 1980. Applicant: PETROLEUM PUMP & TRANSPORT SERVICE, INC., 2800 West 42d St., P.O. Box 3803, Odessa, TX 79760. Representative: George L. Fowler, 115 West Fifth St., Odessa, TX 79761. Transporting *such machinery, materials, supplies, and equipment* as are incidental to, or used in the construction, development, operation, and maintenance of facilities for the discovery, development, and production of natural gas and petroleum, between points in TX, OK, KS, NM, LA, and CO.

MC 152445 (Sub-1F), filed November 10, 1980. Applicant: MATHEWS TRANSPORT, INC., Route 1, Box 47, Walworth, WI 53184. Representative: Michael J. Wyngaard, 150 East Gilman St., Madison, WI 53703. Transporting (1) *doors,* (2) *door frames,* and (3) *parts for doors and door frames,* and (4) *materials, equipment, and supplies* used in the manufacture, sale, and distribution of the commodities in (1), (2), and (3), between points in Walworth County, WI, on the one hand, and, on the other, points in the U.S. (except AK and HI).

Agatha L. Mergenovich,
Secretary.

[FR Doc. 80-37029 Filed 11-26-80; 8:45 am]
BILLING CODE 7035-01-M

Permanent Authority Decisions Notice

The following applications, files on or after March 1, 1979, are governed by Special Rule 247 of the Commission's *Rules of Practice* (49 CFR 1100.247). These rules provide, among other thing, that a petition for intervention, either in support of or in opposition to the granting of an application, must be filed with the Commission within 30 days after the date notice of the application is published in the Federal Register. Protests (such as were allowed to filings prior to March 1, 1979) *will be rejected.* A petition for intervention without leave must comply with Rule 247(k) which requires petitioner to demonstrate that it (1) holds operating authority permitting performance of any of the service which the applicant seeks authority to perform, (2) has the necessary equipment and facilities for performing that service, and (3) has performed service within the scope of the application either (a) for those supporting the application, or, (b) where the service is not limited to the facilities of particular shippers, from and to, or between, any of the involved points.

Persons unable to intervene under Rule 247(K) may file a petition for leave to intervene under Rule 247(1) setting forth the specific grounds upon which it is made, including a detailed statement of petitioner's interest, the particular facts, matters, and things relied upon, including the extent, if any, to which petitioner (a) has solicited the traffic or business of those supporting the application, or, (b) where the identity of those supporting the application is not included in the published application notice, has solicited traffic or business identical to any part of that sought by applicant within the affected marketplace. The Commission will also consider (a) the nature and extent of the property, financial, or other interests of the petitioner, (b) the effect of the decision which may be rendered upon petitioner's interest, (c) the availability of other means by which the petitioner's interest might be protected, (d) the extent to which petitioner's interest will be represented by other parties, (e) the extent to which petitioner's participation may reasonably be expected to assist in the development of a sound record, and (f) the extent to which participation by the petitioner would broaden the issues or delay the proceeding.

Petitions not in reasonable compliance with the requirements of the rule may be rejected. An original and one copy of the petition to intervene shall be filed with the Commission indicating the specific rule under which the petition to intervene is being filed, and a copy shall be served concurrently upon applicant's representative, or upon applicant if no representative is named.

Section 247(f) provides, in part, that an applicant which does not intend to timely prosecute its application shall prompty request that it be dismissed, and that failure to prosecute and application under the procedures of the Commission will result in its dismissal.

If an applicant has introduced rates as an issue it is noted. Upon request, and applicant must provide a copy of the tentative rate schedule to any protestant.

Futher processing steps will be by Commission notice, decision, or letter which will be served on each party of record. *Broadening amendments will not be accepted after November 28, 1980.*

Any authority granted may reflect administrative acceptable restrictive amendments to the service proposed below. Some of the applications may have been modified to conform to the Commission's policy of simplifying grants of operating authority.

Findings. With the exception of those applications involving duly noted problems (e.gs., unresolved common control, unresolved fitness questions and jurisdictional problems) we find, preliminarily, that each common carrier applicant has demonstrated that its proposed service is required by the present and future public convenicence and necessity, and that each contract carrier applicant qualifies as a contract carrier and its proposed contract carrier service will be consistent with the public interest and the transportation policy of 49 U.S.C. 10101. Each applicant is fit, willing, and able properly to perform the service proposed and to conform to the requirements to Title 49, Subtitle IV, United States Code, and the Commission's regulation. Except where specifically noted, this decision is neither a major Federal action significantly affecting the quality of the human enviroment nor a major regulatory action under the Energy Policy and Conservation Act of 1975.

In those proceedings containing a statement or note that dual operations are or may be involved we find, preliminarily and in the absence of the issue being raised by a petitioner, that the proposed dual operations are consistent with the public interest and the transportation policy of 49 U.S.C. 10101 subject to the right of the Commission, which is expressly reserved, to impose such terms, conditions or limitations as it finds necessary to insure that applicant's operations shall conform to the provisions of 49 U.S.C. 10930(a) (formerly section 210 of the Interstate Commerce Act).

In the absence of legally sufficient petitions for intervention, filed on or before December 29, 1980 (or, if the application later becomes unopposed) appropriate authority will be issued to each applicant (except those with duly noted problems) upon compliance with certain requirements which will be set forth in a notification of effectiveness of the decision-notice. To the extent that the authority sought below may duplicate an applicant's other authority, such duplication shall be construed as conferring only a single operating right.

Applicants must comply with all specific conditions set forth in the following decision-notices within 30 days after publication or the application shall stand denied.

Note.—All applications are for authority to operate as a common carrier, by motor vehicle, in interstate or foreign commerce over irregular routes, except as otherwise noted.

Volume No. 381

Decided: November 20, 1980.

By the Commission, Review Board Number 1, members Carleton, Joyce and Jones.

MC 148732 (Sub-3F), (correction) filed June 30, 1980, published in the Federal Register, issue of August 7, 1980, and republished, as corrected, this issue. Applicant: L & J TRUCKING, INC., P.O. Box 1325, Wisconsin Rapids, WI 54494. Representative: Robert P. Sack, P.O. Box 6010, West St. Paul, MN 55118. Transporting *such commodities* as are dealt in or used by manufacturers, converters, printers and distributors of paper and paper products (except commodities in bulk), from points in Wood and Portage Counties, WI, to points in AZ, CA, CO, ID, MT, NV, NM, OR, UT, WA, and WY. The purpose of this republication is to correct the territorial description, substituting NV for WV as destination states.

Volume No. 382

Decided: November 18, 1980.

By the Commission, Review Board Number 2, members Chandler, Eaton and Liperman.

MC 140612 (Sub-73F), filed October 2, 1979. Applicant: ROBERT F. KAZIMOUR, P.O. Box 2207, Cedar Rapids, IA 52406. Representative: J. L Kazimour (address same as applicant). Transporting (1) *kitchen, bathroom, and household cabinets, and (2) materials, equipment and supplies* used in the manufacture, sale and distribution of the commodities in (1) above, (except commodities in bulk, in tank vehicles). Between Des Moines, IA, on the one hand, and, on the other, points in and west of MI, OH, KY, TN, NC, SC, GA, and FL, restricted to traffic originating at or destined to the facilities used by Francisco Cabinet Corp.

Agatha L. Mergenovich,
Secretary.

[FR Doc. 80-37027 Filed 11-26-80; 8:45 am]
BILLING CODE 7035-01-M

Motor Carrier Permanent Authority Decisions Notice

The following applications, filed on or after July 3, 1980, are governed by Special Rule 247 of the Commission's Rules of Practice, see 49 CFR 1100.247. Special rule 247 was published in the Federal Register on July 3, 1980, at 45 FR 45539.

Persons wishing to oppose an application must follow the rules under 49 CFR 1100.247(B). Applications may be protested *only* on the grounds that applicant is not fit, willing, and able to provide the transportation service and to comply with the appropriate statutes and Commission regulations. A copy of any application, together with applicant's supporting evidence, can be obtained from any applicant upon request and payment to applicant of $10.00.

Amendments to the request for authority are not allowed. Some of the applications may have been modified prior to publication to conform to the Commission's policy of simplifying grants of operating authority.

Findings: With the exception of those applications involving duly noted problems (e.gs., unresolved common control, fitness, water carrier dual operations, or jurisdictional questions) we find, preliminarily, that each applicant has demonstrated its proposed service warrants a grant of the application under the governing section of the Interstate Commerce Act. Each applicant is fit, willing, and able to perform the service proposed, and to conform to the requirements of Title 49, Subtitle IV, United States Code, and the Commission's regulations. Except where noted, this decision is neither a major Federal action significantly affecting the quality of the human environment nor a major regulatory action under the Energy Policy and Conservation Act of 1975.

In the absence of legally sufficient protests in the form of verified statements filed on or before January 12,

1981 (or, if the application later becomes unopposed) appropriate authority will be issued to each applicant (except those with duly noted problems) upon compliance with certain requirements which will be set forth in a notice that the decision-notice is effective. Within 60 days after publication an applicant may file a verified statement in rebuttal to any statement in opposition.

To the extent that any of the authority granted may duplicate an applicant's other authority, the duplication shall be construed as conferring only a single operating right.

Note.—All applications are for authority to operate as a motor common carrier in interstate or foreign commerce over irregular routes, unless noted otherwise. Applications for motor contract carrier authority are those where service is for a named shipper "under contract".

Volume No. OP1-061

Decided: November 20, 1980.

By the Commission, Review Board Number 1, members Carleton, Joyce and Jones. Member Joyce not participating.

MC 6031 (Sub-61F), filed November 12, 1980. Applicant: BARRY TRANSFER & STORAGE CO., INC., 120 East National Ave., Milwaukee, WI 53204. Representative: Richard C. Alexander, 710 North Plankinton Ave., Milwaukee, WI 53203. Transporting *metal articles*, between points in the U.S., under continuing contract(s) with Joseph T. Ryerson & Son, Inc., of Milwaukee, WI.

MC 56270 (Sub-49F), filed November 12, 1980. Applicant: LEICHT TRANSFER & STORAGE CO., a corporation, 1401 State St., P.O. Box 2385, Green Bay, WI 54306. Representative: Leonard R. Kofkin, 39 South LaSalle St., Chicago, IL 60603. Transporting *fabricated metal products*, from Stevens Point and New London, WI, to points in the U.S.

MC 68100 (Sub-43F), filed November 6, 1980. Applicant: D. P. BONHAM TRANSFER, INC., P.O. Drawer G, Bartlesville, OK 74003. Representative: Nate Bonham, Jr. (same address as applicant). Transporting (1) *concrete roofing tile*, and (2) *materials and supplies* used in the manufacture and installation of concrete roofing tile, between points in Pottawatomie County, OK, on the one hand, and, on the other, points in AR, CO, KS, LA, MO, NM, and TX.

MC 103490 (Sub-85F), filed November 12, 1980. Applicant: PROVAN TRANSPORT CORP., 210 Mill St., Newburgh, NY 12550. Representative: Morton E. Kiel, Suite 1832, Two World Trade Center, New York, NY 10048. Transporting *chemicals*, in bulk (1) between points in New Jersey and points in Fairfield County, CT, on the one hand, and, on the other, points in the U.S., and (2) between points in Harris County, TX, and Shelby County, TN, on the one hand, and, on the other, points in Fayette County, PA.

MC 110420 (Sub-858F), filed November 11, 1980. Applicant: QUALITY CARRIERS, INC., 100 Waukegan Road, P.O. Box 1000, Lake Bluff, IL 60044. Representative: John R. Sims, Jr., 915 Pennsylvania Bldg., 425 13th St., NW., Washington, DC 20004. Transporting *wine*, in bulk, from Guasti, CA, to Walworth, WI.

MC 113751 (Sub-39F), filed November 11, 1980. Applicant: HAROLD F. DUSHEK, INC., 10th & Columbia Streets, Waupaca, WI 54981. Representative: James A. Spiegel, Olde Towne Office Park, 6425 Odana Rd., Madison, WI 53719. Transporting *foodstuffs*, from Lawton, MI, to points in IA, IL, IN, KY, MN, MO, ND, SD, TN, and WI.

MC 118431 (Sub-37F), filed November 11, 1980. Applicant: DENVER SOUTHWEST EXPRESS, INC., P.O. Box 9799, Little Rock, AR 72209. Representative: Scott E. Daniel, 800 Nebraska Savings Bldg., 1623 Farnam, Omaha, NE 68102. Transporting (1) *foodstuffs*, and (2) *materials, equipment, and supplies* used in the manufacture and distribution of foodstuffs (except commodities in bulk), between points in the U.S., under continuing contract(s) with Ore-Ida Foods, Inc., of Boise, ID.

MC 124821 (Sub-108F), filed November 12, 1980. Applicant: GILCHRIST TRUCKING, INC., 105 North Keyser Avenue, Old Forge, PA 18518. Representative: Edward F. V. Pietrowski, 3300 Birney Ave., Moosic, PA 18507. Transporting (1) *foodstuffs*, and (2) *materials and supplies* used in the manufacture and distribution of the commodities in (1) above, between Franklin Park, IL, on the one hand, and, on the other, those points in the U.S. in and east of WI, IL, KY, TN, and MS.

MC 141740 (Sub-14F), filed November 12, 1980. Applicant: STOOPS EXPRESS, INC., 2239 Malibu Court, Anderson, IN 46011. Representative: Donald W. Smith, P.O. Box 40248, Indianapolis, IN 46240. Transporting *general commodities* (except classes A and B explosives, and household goods as defined by the Commission), between points in the U.S., under continuing contract(s) with Ball Corporation, of Muncie, IN.

MC 145240 (Sub-8F), filed November 12, 1980. Applicant: L. D. BRINKMAN TRUCKING CORP., 520 N. Wildwood, Irving, TX 75060. Representative: Lawrence A. Winkle, P.O. Box 45538, Dallas, TX 75245. Transporting *such commodities* as are dealt in by grocery and food business houses, between points in the U.S., under continuing contract(s) with The Colgate Palmolive Company, of Kansas City, KS.

MC 147021 (Sub-7F), filed October 31, 1980. Applicant: C. SUMMERS, INC., 112 Spruce St., Elizabethville, PA 17023. Representative: Daniel W. Krane, P.O. Box 626, 2207 Old Gettysburg Rd., Camp Hill, PA 17011. Transporting (1) *non-exempt food or kindred products*, as described in Item 20 of the Standard Transportation Commodity Code Tariff, and (2) *materials and supplies* used in the distribution of the commodities in (1) above, between points in Cumberland, Luzerne, Lancaster, Montgomery and Schuylkill Counties, PA, on the one hand, and, on the other, points in DE, IL, IN, MD, MI, OH, PA, NJ, NY, VA, WV, and DC.

Volume No. OP2-100

Decided: November 19, 1980.

By the Commission Review Board Number 2, Members Chandler, Eaton, and Liberman.

MC 128153 (Sub-4F), filed October 31, 1980. Applicant: VICTORY VAN CORPORATION, 950 South Pickett Street, Alexandria, VA 22304. Representative: Alan F. Wohlstetter, Suite 301, 1700 K Street, NW., Washington, DC 20006. Transporting *general commodities* (except used household goods, hazardous or secret materials, and sensitive weapons and munitions) for the United States Government, between points in the U.S.

MC 139052 (Sub-2F), filed November 3, 1980. Applicant: CENTRAL UTAH TRANSPORTATION CO. d.b.a. ALL STATES MOVING & STORAGE, 514 S. University Ave., Provo, UT 84601. Representative: Irene Warr, 430 Judge Bldg., Salt Lake City, UT 84111. Transporting *general commodities* (except used household goods, hazardous or secret materials, and sensitive weapons and munitions), for the United States Government, between points in the U.S.

MC 151363 (Sub-1F), filed November 3, 1980. Applicant: GENE SCHMITZ TRUCKING, INC., 2800 S. Meridian, Oklahoma City, OK 73108. Representative: C. L. Phillips, Room 248—Classen Terrace Bldg., 1411 N. Classen, Oklahoma City, OK 73106. Transporting *general commodities* (except used household goods, hazardous or secret materials, and sensitive weapons and munitions) for the United States Government, between points in the U.S.

MC 115322 (Sub-201F), filed November 3, 1980. Applicant: REDWING

REFRIGERATED, INC., P.O. Box 10177, Taft, FL 32809. Representative: James E. Wharton, Suite 811, Metcalf Bldg., 100 South Orange Ave., Orlando, FL 32801. Transporting *general commodities* (except used household goods, hazardous or secret materials, and sensitive weapons and munitions) for the United States Government, between points in the U.S.

MC 152573F filed November 3, 1980. Applicant: EWALD SPRECHER, an individual, 704 South Kimball, Mitchell, SD 57301. Representative: James Robert Evans, 145 W. Wisconsin Ave., Neenah, WI 54956. Transporting *food and other edible products* (including edible byproducts but excluding alcoholic beverages and drugs) intended for human consumption, *agricultural limestone and other soil conditioners, and agricultural fertilizers* when such transportation is provided with the owner of the motor vehicle, except in emergency situations, between points in the U.S.

Agatha L. Mergenovich,
Secretary.

[FR Doc. 80-37026 Filed 11-26-80; 8:45 am]
BILLING CODE 7035-01-M

[Docket No. AB-57 (Sub-9F)]

Soo Line Railroad Co.—Abandonment—Near Bergland and Ontonagon, MI; Findings

Notice is hereby given pursuant to 49 U.S.C. 10903 that by a Certificate and Decision decided November 21, 1980, a finding, which is administratively final, was made by the Commission, Review Board Number 5, stating that, the present and future public convenience and necessity permit the abandonment by the Soo Line Railroad Company of a line of railroad known as the Bergland-Nestoria line extending westerly from a point near Nestoria, Baraga County, MI, at railraod milepost 201.68 to a point near Bergland, Ontonagon County, MI, at railroad milepost 268.89, a distance of 67.21 miles, subject to the conditions for the protection of railway employees prescribed by the Commission in *Oregon Short Line R. Co.—Abandonment Goshen,* 360 I.C.C. 91 (1979). A certificate of public convenience and necessity permitting abandonment was issued to the Soo Line Railroad Company. Since no investigation was instituted, the requirement of Section 1121.38(a) of the Regulations that publication of notice of abandonment decisions in the Federal Register be made only after such a decision becomes administratively final was waived.

Upon receipt by the carrier of an actual offer of financial assistance, the carrier shall make available to the offeror the records, accounts, appraisals, working papers, and other documents used in preparing Exhibit I (Section 1121.45 of the Regulations). Such documents shall be made available during regular business hours at a time and place mutually agreeable to the parties.

The offer must be filed with the Commission and served concurrently on the applicant, with copies to Ms. Ellen Hanson, Room 5417, Interstate Commerce Commission, Washington, DC 20423, no later than December 8, 1980. The offer, as filed, shall contain information required pursuant to Section 1121.38(b) (2) and (3) of the Regulations. If no such offer is received, the certificate of public convenience and necessity authorizing abandonment shall become effective 30 days from the service date of the certificate.

Agatha L. Mergenovich,
Secretary.

[FR Doc. 80-37086 Filed 11-26-80; 8:45 am]
BILLING CODE 7035-01-M

[Docket No. AB-69 (Sub-5F)]

Western Maryland Railway Co.—Abandonment—Between Williams and Pierce in Tucker County, W. Va.; Findings

Notice is hereby given pursuant to 49 U.S.C. 10903 that by a Certificate and Decision decided November 21, 1980, a finding, which is administratively final, was made by the Commission, Review Board Number 5, stating that, subject to the conditions for the protection of railway employees prescribed by the Commission in *Oregon Short Line R. Co.—Abandonment Goshen,* 360 I.C.C. 91 (1979), and further that applicant shall keep intact all of the right-of-way underlying the track, including all the bridges and culverts for a period of 120 days from the decided date of the certificate and decision to permit any state or local government agency or other interested party to negotiate the acquisition for public use of all or any portion of the right-of-way, the present and future public convenience and necessity permit the abandonment and discontinuance of service on the following line of railroad known as: Sand Run Branch, from Valuation Station minus 1+11 (milepost 0.00), at or near Williams, W VA, to Valuation Station 126+00 (milepost 2.41), near Pierce, W VA, a total distance of 2.41 miles in Tucker County, W VA. A certificate of public convenience and necessity permitting abandonment was issued to the Western Maryland Railway Company. Since no investigation was instituted, the requirement of § 1121.38(a) of the Regulations that publication of notice of abandonment decisions in the Federal Register be made only after such a decision becomes administratively final was waived.

Upon receipt by the carrier of an actual offer of financial assistance, the carrier shall make available to the offeror the records, accounts, appraisals, working papers, and other documents used in preparing Exhibit I (§ 1121.45 of the Regulations). Such documents shall be made available during regular business hours at a time and place mutually agreeable to the parties.

The offer must be filed with the Commission and served concurrently on the applicant with copies to Ms. Ellen Hanson, Room 5417, Interstate Commerce Commission, Washington, D.C. 20423, no later than December 8, 1980. The offer, as filed, shall contain information required pursuant to § 1121.38(b) (2) and (3) of the Regulations. If no such offer is received, the certificate of public convenience and necessity authorizing abandonment shall become effective 30 days from the service date of the certificate.

Agatha L. Mergenovich,
Secretary.

[FR Doc. 80-37087 Filed 11-26-80; 8:45 am]
BILLING CODE 7035-01-M

DEPARTMENT OF JUSTICE

Antitrust Division

United States v. Agri-Mark, Inc., et al. Competitive Impact Statements and Proposed Consent Judgments

Pursuant to the Antitrust Procedures and Penalties Act, 15 U.S.C. 16(b), (APPA), the Antitrust Division publishes the following *Comments* received from members of the public on the proposed Final Judgment filed on July 16, 1980 in the case of *United State* v. *Agri-Mark, Inc., et al.,* Civil Action No. 80-174 (D. VT). Also published, herewith, is the *Response* of the Department of Justice to such *Comments.* This publication completes compliance with the provisions of the APPA.

Joseph H. Widmar,
Director of Operations Antitrust Division.

U.S. District Court For the District of Vermont

United States of America, Plaintiff, v. *Agri-Mark, Inc., Agway Inc., and H. P. Hood, Inc.,* Defendants.

Civil Action No.: 80-174.

Response of United States to Comments Relating To Proposed Final Judgment

Pursuant to the Antitrust Procedures and Penalties Act, 15 U.S.C 16(b), plaintiff, the United States of America, hereby files the comments of members of the public on the proposed Final Judgment in this civil antitrust suit and the United States' response to those comments.

Factual Background

Agri-Mark, Inc. ("Agri-Mark"), is the largest cooperative of dairy farmers in New England. It is the successor to Yankee Milk, Inc. ("Yankee"). H. P. Hood, Inc. ("Hood") is New England's largest dairy. The Complaint charged that a proposed supply agreement between Agri-Mark and Hood and Agri-Mark's acquisition of all of Hood's fixed dairy assets would violate Sections 3 and 7 of the Clayton Act, respectively. This transaction would have violated the Clayton Act by foreclosing dairy farmers who were not Agri-Mark members from selling milk to Hood and because it may have lessened competition in the production, sale, and procurement of raw milk and fluid milk products by creating a combination powerful enough to dominate the New England milk industry at the producer and dairy levels. Plaintiff filed the Complaint on June 26, 1980.

The parties entered settlement negotiations on July 2, 1980. Those negotiations resulted in a stipulation for entry of a proposed Final Judgment settling this action.

The proposed Final Judgment enjoins Agri-Mark from favoring Hood over other dairies in price or other terms or conditions of sale, from selectively cutting prices so as to lessen competition, and from discriminating against members who leave Agri-Mark in order to compete with it. Hood is enjoined from entering any supply agreement with Agri-Mark with a duration of more than one year and from hauling milk for Agri-Mark. Hood and Agri-Mark are enjoined from having any common officers, directors, or management, from discussing milk prices except for sales between themselves, and from acquiring any dairy or balancing plant for five years without the consent of the Department of Justice or the Court. Pursuant to the proposed Final Judgment, Hood must purchase milk from Hood independents (dairy farmers who shipped milk to Hood at any time in February, 1980, and who, at that time, were not members of a milk marketing or bargaining cooperative) until March 1, 1981, and Agri-Mark must permit Hood independents to terminate their Agri-Mark marketing agreements during a 20 day grace period.

To date, the parties have complied with the provisions of the Antitrust Procedures and Penalties Act as follows:

(1) The proposed Final Judgment and a Competitive Impact Statement were filed July 16, 1980;

(2) The proposed Final Judgment and a Competitive Impact Statement were published in the Federal Register on July 31, 1980, 45 FR 50990;

(3) A summary of the terms of the proposed Final Judgment and Competitive Impact Statement was published:

(a) In the *Washington Star*, a newpaper of general circulation in the District of Columbia, during the period July 31–August 6, 1980, and

(b) In the *Burlington Free Press*, a newspaper of general circulation in Burlington, Vermont, during the period August 6–12, 1980;

(4) The sixty-day period specified in 15 U.S.C. 16(b) commenced on August 6, 1980 and terminated on October 6, 1980;

(5) The United States hereby files the comments of members of the public (attached as appendix A) together with the United States' response to the comments, pursuant to 15 U.S.C. 16(b) and;

(6) Defendants filed statements pursuant to 15 U.S.C. 16(g) on July 25, 1980.

The United States will move this Court for entry of the Final Judgment after the comments and the response are published in the Federal Register. No Final Judgment can be entered before that publication. 15 U.S.C. 16(d).

I.

Legal Standard Governing the Court's "Public Interest" Determination

The Antitrust Procedures and Penalties Act ("APPA"), 15 U.S.C. 16, governs the entry of consent judgments in antitrust actions commenced by the United States. In general, the Act imposes upon the court an affirmative duty to determine, prior to entry of any final consent judgment, whether the entry of the consent judgment is in the public interest, and, by imposing disclosure obligations upon the parties, opens the negotiations and the proposed consent judgment to limited public scrutiny.

Prior to passage of the APPA in 1974, it was already clear that entry of a "consent decree is a judicial act * * * and, therefore, involves a determination by the chancellor that it is equitable and in the public interest." *United States* v. *Radio Corporation of America*, 46 F. Supp. 654, 655 (D. Del. 1942), *appeal dismissed*, 318 U.S. 796 (1943); *United States* v. *Carter Products, Inc.*, 211 F. Supp. 144, 147–48 (S.D.N.Y. 1962); *see also United States* v. *Swift & Co.*, 286 U.S. 106, 115 (1932). Judges were on notice that a consent decree "must be scrutinized carefully and approved, both as to form and content, by the court entering it, prior to such entry." *Esco Corp.* v. *United States*, 340 F.2d 1000, 1005 (9th Cir. 1965).

Before the APPA, primary responsibility for determining that settlements were in the public interest was vested in the department of Justice. *See* Handler, *The Shift From Substantive to Procedural Innovations in Antitrust Suits—The Twenty-Third Annual Antitrust Review*, 71 Colum. L. Rev. 1, 17–23 (1971). The Attorney General retained a considerable range of discretion in negotiating and agreeing to consent judgments. *See Sam Fox Publishing Co.* v. *United States*, 366 U.S. 683, 689 (1961); *Swift & Co.* v. *United States*, 276 U.S. 311, 331–32 (1928). "We do not question the authority of the Attorney General to settle (antitrust) suits after, as well as before, they reach here." *Cascade natural Gas Corp.* v. *El Paso Natural Gas Co.*, 386 U.S. 129, 136 (1967).

None of this was altered with enactment of the APPA. As the House Report States, the APPA is "unambiguous" in adopting prior law as to the standards for judicial review of a consent decree. H.R. Rep. No. 1463, 93rd Cong., 2d Sess. 11–12 (1974) (U.S. Code Cong. and Admin. News 1974, 93rd Cong. 2nd Sess., p. 6542).[1] Congress was satisfied with the existing standard of review but directed courts to apply the required standard rather than simply to rubber-stamp consent decrees. The APPA's procedures ensure that courts will make the independent but not *de novo* assessment of the public interest required by the pre-existing law.

There have been several published decisions regarding judicial review of consent decrees under the APPA.[2] Two principles emerge from the case law and the legislative history of the APPA. First, the decision to make a settlement and the terms of settlement are within the discretionary power of the Attorney General. Second, the APPA requires the court to guard the public from acts in bad faith or clear error by the Attorney General. Thus, the courts and the APPA recognize that, barring dereliction of duty, the Attorney General is the protector of the public interest in antitrust law enforcement and decisions made by the Attorney General in negotiating consent judgments should be determinative of that interest.

The Attorney General's responsibilities include negotiating consent decrees, "a legitimate and integral part of antitrust enforcement." S. Rep. No. 298, 93d Cong. 1st Sess. 3 (1973). His broad discretion to settle antitrust suits is not questioned absent a claim of bad faith or malfeasance on the part of the government. *United States* v. *Associated Milk Producers, Inc.*, 394 F. Supp. 29, 41 (W.D. Mo. 1975), *aff'd*, 534 F.2d 113 (8th Cir. 1976), *cert. denied sub nom. National Farmers Organization, Inc.* v. *United States*, 429 U.S. 940 (1976) (hereafter *AMPI*) (citing *Sam Fox Publishing Co., supra*, and *Swift & Co., supra*). In affirming the lower court's denial of motions to intervene in *AMPI*, the Eight Circuit noted, 534 F. 2d at 117:

[1] The text of the House Report is:

Preservation of antitrust precedent rather than innovation in the usage of the phrase, "public interest," is, therefore, unambiguous. The original phrase ("public interest as defined by law") either referred to "all law" and was too general or referred to "antitrust law" and was too narrow in that the policy of the antitrust laws as such would not admit of compromises made for nonsubstantive reasons inherent in the process of settling cases through the consent decree procedure. See, for example, *U.S.* v. *Atlantic Refining Co.*, 360 U.S. 19 (1959); *U.S.* v. *Armour & Co.*, 402 U.S. 673 (1971).

[2] *United States* v. *Bechtel Corp.*, 1979–1 Trade Cases ¶ 62,430 at 76,585 (N.D. Calif. 1979), (attached to Court copy as appendix B) *appeal docketed*, No. 79–4194 (9th Cir. April 9, 1979); *United States* v. *Carrols Development Corporation*, 454 F. Supp. 1215, 1222 (N.D.N.Y. 1978); *United States* v. *National Broadcasting Co.*, 449 F. Supp. 1127, 1141–45 (C.D. Calif. 1978); *United States* v. *Mid-America Dairymen, Inc.*, 1977–1 Trade Cases ¶ 61,508 at 71,979–980 (W.D. Mo. 1977) (attached to Court copy as appendix C); *United States* v. *Morgan Drive Away Inc.*, 1976–1 Trade Cases ¶ 60,949 at 69,191 (D.D.C. 1976) (attached to Court copy as appendix D); *United States* v. *Gillette Co.*, 406 F. Supp. 713, 715–717 (D. Mass. 1975); and *United States* v. *Associated Milk Producers, Inc.*, 394 F. Supp. 29, 44–46 (W.D. Mo. 1975), *aff'd*, 534 F. 2d 113 (8th Cir. 1976), *cert. denied sub nom. National Farmers Organization, Inc.* v. *United States*, 429 U.S. 940 (1976).

It is axiomatic that the Attorney General must retain considerable discretion in controlling government litigation and in determining what is in the public interest.

At the same time it is important to bear in mind that consent decrees normally embody compromise, *United States* v. *Armour & Co.*, 402 U.S. 673, 681 (1971), and that the law favors compromise settlements. *United States* v. *National Broadcasting Co.*, 449 F. Supp. 1127, 1141 (C.D. Calif. 1978). In approving the consent decree in *United States* v. *Gillette Co.*, 406 F. Supp. 713 (D. Mass. 1975), Judge Aldrich explained:

It is not the court's duty to determine whether this is the best possible settlement that could have been obtained if, say, the government had bargained a little harder. The court is not settling the case. It is determining whether the settlement achieved is within the reaches of the public interest.

These decisions are consistent with Congressional concern in passing the APPA that consent decrees remain a viable enforcement option. S. Rep. No. 298 at 6. They could not remain viable if it were necessary for a reviewing court to conduct a trial for the *de novo* determination of factual issues relevant to the adequacy of a proposed decree. The legislative history is clear that the court need not conduct the equivalent of a trial on the merits, or even conduct a hearing or take evidence, S. Rep. No. 298 at 6:

The Committee recognizes that the court must have broad discretion to accommodate a balancing of interests. On the one hand, the court must obtain the necessary information to make its determination that the proposed consent decree is in the public interest. On the other hand, it must preserve the consent decree as a viable settlement option. It is not the intent of the Committee to compel a hearing or trial on the public interest issue. It is anticipated that the trial judge will adduce the necessary information through the least complicated and least time-consuming means possible. Where the public interest can be meaningfully evaluated simply on the basis of briefs and oral arguments, this is the approach that should be utilized. Only where it is imperative that the court should resort to calling witnesses for the purpose of eliciting additional facts should it do so.[3]

The expeditious procedures to determine the public interest that Congress envisioned would not be possible without reliance upon the Department of Justice's good faith execution of its authority to protect the public interest.

The APPA suggests a number of factors that a court *may* consider in making its public interest determination. 15 U.S.C. 16(e)(1) and (2). It is instructive that these enumerated factors are a restatement of subjects the United States *must* address in its Competitive Impact Statement, 15 U.S.C. 16(b). Each of these factors is relevant to the adequacy of a consent judgment. That the United States must consider these factors, but that the court need not, indicates plainly Congessional willingness to rely upon determinations of the Department of Justice.

Congress intended, however, that the Court's determination under the APPA be a substantive one. The Act does interpose "a check upon the government's good faith and expertise." *United States* v. *Morgan Drive Away, Inc.*, 1976-1 Trade Cases ¶ 60,949 at 69,161 (D.D.C. 1976). The Court should test the proposed decree by determining "whether the relief provided * * is adequate to remedy the allegations of antitrust violation as set out in the complaint." *United States* v. *Bechtel Corp.*, 1979-1 Trade Cases ¶ 62,430 at 76,565 (N.D. Calif. 1979), *appeal docketed*, No. 79-4194 (9th Cir. April 9, 1979). In other words, the Court should direct its inquiry at whether the settlement reasonably accomplishes what the United States intended to accomplish—protecting "the public by insuring healthy competition in the future." S. Rep. No. 298 at 6.

Judge Oliver's opinions in *AMPI, supra*, and *United States* v. *Mid-America Dairymen, Inc.*, 1977-1 Trade Cases, ¶ 61,508 (W.D. Mo. 1977), give thoughtful treatment to the court's duty under the APPA. His Conclusions of Law in *Mid-America Dairymen, Inc.*, include at 71,979-80 a concise statement concerning how a court should make its public interest determination:

10. The APPA did not change the pre-existing standards for determining whether entry of an antitrust consent decree is in the public interest. Specifically, APPA did not give this Court authority to substitute its judgment about the advisability of settlement by consent judgment in lieu of trial.

11. The APPA does not require the Court to conduct a trial or evidentiary hearing to determine whether entry of the proposed judgment is in the public interest. No additional proceedings, other than those conducted, were necessary under the circumstances of this case.

* * * * *

13. While it is clear that it was the intention of Congress in passing APPA to require that a reviewing Court make an independent public interest determination, it is equally clear that APPA does not permit or require the reviewing court to make a *de novo* determination of facts and issues presented by the pleadings in the case.

14. Absent a showing of corrupt failure of the government to discharge its duty, the Court, in making its public interest finding, should, as we have done, carefully consider the explanations of the government in the competitive impact statement and its responses to comments in order to determine whether those explanations are reasonable under the circumstances. The Court must also give appropriate recognition, as we have done, to the fact that every consent judgment normally embodies a compromise and that the parties each give up something which they might have won had they proceeded to trial. *United States* v. *Armour* [1971 Trade Cases ¶ 73,589], 402 U.S. 673 (1973), cited with approval in H.R. Rep. No. 1463, 93rd Cong., 2nd Sess. 11-12 (1974).

* * * * *

16. The APPA codifies the case law which established that the Department of Justice has a range of discretion in deciding the terms upon which an antitrust case will be settled. *Sam Fox Publishing Co.* v. *United States*, 366 U.S. 683 689 (1961); *Swift & Co.* v. *United States*, 276 U.S. 311, 331-332 (1928).

* * * * *

23. The plaintiff, through the duly appointed, qualified and acting officials in the Department of Justice, has an appropriate range of discretion in prosecuting alleged violations of the antitrust laws and determining appropriate injunctive relief for the settlement of such cases.

24. This Court may not substitute its opinion or views concerning the prosecution of alleged violations of the antitrust laws or the determination of appropriate injunctive relief for the settlement of such cases absent proof of an abuse of discretion.

Judge Oliver set a narrow standard of judicial review consistent with all other decisions under the APPA—the court should determine whether the United States' explanations in support of the proposed judgment are reasonable in light of the circumstances. Put another way, absent a showing of bad faith the court need only determine whether the United States' reasoning is in clear error.

In sum, since the Department of Justice retains discretion to settle cases, a proposed judgment is in the public interest when the United States has negotiated it in good faith, has fully disclosed its reasoning concerning the judgment, and when no clear error inheres in that reasoning. With this standard in mind the Court should review the comments of members of the public concerning the proposed Final Judgment and the United States' response to those comments, set forth below.

II *Summary of Comments*

Set out below is a summary of the recommendations contained in the comments which we received concerning the proposed Final Judgment.

Howard C. Townsend, Commissioner of the New Hampshire Department of Agriculture, Professor Harry Keener, recently retired Dean of the College of Life, Sciences, and Agriculture at the University of New Hampshire, and Vermont dairy farmers Robert Foster, Roderick Towne and Ruth Towne expressed their full support for the proposed Final Judgment.

Alice Cheeseman and Priscilla Rowbotham, two New England dairy farmers, suggested that any settlement should ensure that (1) Agri-Mark will purchase and market nonmember milk, (2) Agri-Mark will continue to enroll members indefintely, (3) Yankee will refund members' equity to them at the time of its dissolution, (4) former Yankee members will have an opportunity to terminate their marketing agreements with Agri-Mark, and (5) Agri-Mark will not coerce haulers into hauling milk only for Agri-Mark.

The Massachusetts Milk Control Commission recommends that the Court appoint an expert to determine whether Agway, Agri-Mark, and Hood should be required to establish a security fund for the protection of dairy farmers in the event of business failure by their dairy customers.[4]

[3] This passage is quoted in *AMPI, supra*, 394 Fed. Supp. at 44-45.

[4] Our understanding of this comment is based on a telephone conversation with the Commission's office on October 7, 1980.

Community Nutrition Institute (CNI), a public interest organization that studies food and nutrition issues, expressed support for the relief provided in paragraphs IV, V, VI C and VII. It recommends that the five-year restrictions in paragraph X concerning defendants' acquisitions of dairies and balancing plants be extended to twenty-five years.

Grant's Dairy, a Maine dairy, acknowledges the equity of the proposed judgment. Grant's also asked that the Department consider two points: (1) The possibility that Agri-Mark may choose not to sell milk to Maine dairies; and (2) whether Hood will be able to impose excessive charges for services it supplies to other dairies.

Fairdale Farms, Inc., a Vermont dairy, recommends that the proposed Final Judgment include "restraints against violations of antitrust laws * * * in the processing, packaging and distributing of fluid dairy products."

The National Independent Dairies Association (NIDA) and the National Association for Milk Marketing Reform (NAMMR), two trade associations of dairies, generally object to the proposed Final Judgment and urge that the Department of Justice proceed to a trial on the merits in this action. Alternatively, NIDA suggests that any final judgment in this action should enjoin Hood from engaging in price discrimination and sales below costs in violation of the Robinson-Patman Act and applicable state laws. Furthermore, NIDA suggests that "costs" should be defined in a final judgment to include all costs attributable to Hood's operations as though it were still an independent dairy.

NAMMR alternatively suggests that hearings, appropriately noticed, be scheduled for the purpose of taking testimony of persons who will be affected by the terms of the proposed Final Judgment and that NAMMR be permitted to appear as *amicus curiae*. NAMMR suggests that the proposed Final Judgment is deficient because the restraints it imposes are illusory.

M. Jerome Diamond, Attorney General, State of Vermont, recommends that paragraphs VI C and VII of the proposed Final Judgment be expanded to include all Vermont dairy farmers.

Northern Farms Cooperative (NFC), a Vermont fairy farmers' cooperative, recommends that paragraph VII of the proposed Final Judgment be expanded to include all NFC members.

III United States' Response to Comments

The United States responds below to those comments which suggested relief different or supplemental to that contained in the proposed final Judgment. Copies of this Response without appendices are being mailed to all commentors.

A. *The Cheeseman-Rowbotham Comment*

Alice cheeseman and Priscilla Rowbotham, two New England dairy farmers, suggest that any final judgment should ensure that (1) Agri-Mark will purchase and market nonmember milk, (2) Agri-Mark will continue to enroll members indefinitely, (3) Yankee will refund members' equity to them at the time of its dissolution, (4) former Yankee members will have an opportunity to terminate their marketing agreements with Agri-Mark, and (5) Agri-Mark will not coerce haulers into hauling milk only for Agri-Mark.

Agri-Mark, like other agricultural cooperatives, was formed by dairy farmers for the benefit of its members. Through the cooperative members hope to achieve some degree of market security, increased bargaining strength, economies in raw milk procurement and distribution, improved plant operations, and reduced overhead. Cooperatives, of course, need adequate capital to provide services for members and for continued modernization and expansion. Members must assume major responsibility for financing their cooperatives.

These members would not be willing to carry this financial responsibility if they (through Agri-Mark) were required to, in effect, subsidize nonmembers by marketing and processing nonmembers' milk as suggested in the first recommendation by Mmes. Cheeseman and Rowbotham. Nonmembers then would reap the benefits of cooperative organization without bearing any of the concomitant costs. Under such circumstances it is difficult to understand why any dairy farmer would choose to join or remain in Agri-Mark.

The choice for Agri-Mark between a policy of accepting all dairy farmers wishing to become members and accepting dairy farmers as members only as the cooperative needs additional milk volume presumably will depend on the marketing services it performs, the physical capacity of its facilities, and current and future marketing conditions. The relief suggested in the second recommendation is unnecessary. Absent some showing that Agri-Mark's conduct poses a dangerous probability of success at monopolizing New England Milk markets—and we have no evidence on this point—it seems appropriate that Agri-Mark should continue to make its own decisions concerning enrollment of members.

Yankee's internal operations including its procedures for refunding member equity never were at issue in this case. The proposed Final Judgment should not regulate Yankee's dissolution as suggested in the third recommendation. Yankee members upon joining Yankee executed membership agreements and agreed to comply with the By-Laws, rules and regulations of the association. We understand that former Yankee members will receive a refund of their equity in accordance with a Plan of Distribution adopted by Yankee's board of directors and delegates.

Our response to the fourth recommendation and similar comments by others is set forth below in Section III H of this Response.

Coercion of haulers simply was not at issue in this case; consequently, additional relief as suggested in the fifth recommendation is unnecessary. Agri-Mark would violate the Sherman Act if it utilized its leverage as the dominant cooperative in New England to prohibit haulers it employs from hauling nonmember milk. *See United States* v. *Dairymen Inc.*, 1979–1 Trade Cases ¶62,494 (W.D. Ky. 1978), *appeal docketed*, No. 793438 (6th Cir., July 7, 1979). In that situation aggrieved parties should seek remedy by private actions or by complaining to the Department of Justice.

B. *Massachusetts Milk Control Commission Comment*

The Massachusetts Milk Control commission recommends that the Court appoint an expert to determine whether Agway, Agri-Mark, and Hood should be required to set up a security fund for the protection of dairy farmers in the event of business failure by dairies.

We were concerned in this case that Agri-Mark's acquisition of Hood's assets might adversely affect dairy farmers who supply Hood and dairies that compete with Hood. The proposed Final Judgment provides adequate protection for them. The Massachusetts Milk Control Commission raised an issue which was never part of the United States' antitrust case. Consequently, the remedy it suggested is unnecessary because it goes far beyond any foreseeably necessary relief and is inappropriate because it does not reasonably relate to the antitrust issues that led to United States' filing of this action in the first instance. *See National Broadcasting Co.*, 449 F. Supp., *supra* at 1137, 1145.

C. *The CNI Comment*

Community Nutrition Institute (CNI) recommends that the five-year restrictions in paragraph X concerning defendants' acquisitions of dairies and balancing plants be extended to twenty-five years. CNI believes that a twenty-five year period of surveillance would prevent an increase in vertical integration by the defendants and would allow smaller independent processors to compete against Hood without the fear of being victims of predation.

The relief in this case did not seek to prevent all vertical acquisitions by the defendants in the dairy industry. Our only concern is with acquisitions of dairies or milk manufacturing plants that may result in a lessening of competition. Because of the present market structure of the New England dairy industry, as well as the concerns of industry members about the formation of Agri-Mark and the acquisition of Hood, the Antitrust Division sought to prevent without having to bring a new case under Section 7 of the Clayton Act any further combinations by the defendants in the near future that would increase their holdings in dairies or milk manufacturing plants. The Division bargained for and obtained extraordinary power to prevent any such combinations. Proposed paragraph X gives us that power. It enjoins the defendants from combining with any dairy or milk manufacturing plant without the prior approval of the Department of Justice or the Court. If any defendant seeks Court approval of an acquisition, the burden will be on it to show that the acquisition will not adversely affect competition.

We agreed to a five-year restriction instead of a longer period of time for two reasons. First, such a period will allow the market to adjust to the instant transaction. After five years other dairies will be accustomed to competing with the new Hood and will have established supply relations with Agri-Mark or other sellers. Second, the dairy industry is

constantly evolving as a result of technological changes, changes in federal and state milk marketing regulations, and increased cost pressures that engender efficiencies in the industry. A combination that may lessen competition in the New England dairy market as it is today may not be viewed as anticompetitive in five years. At the conclusion of the proposed five-year period the defendants will not have license to acquire or combine with other companies to the detriment of competition. They still will be subject to the limitations on acquisitions imposed by Section 7 of the Clayton Act, 15 U.S.C. 18, and Sections 1 and 2 of the Sherman Act, 15 U.S.C. 1 and 2.

The restriction on combinations is not intended, as CNI suggests, to prevent the defendants from preying on Hood's smaller competitors. We have no information that either Hood, Agri-Mark, or Agway intends to prey on Hood's competitors and purchase them when they are in a weakened position. Moreover, Sections 1 and 2 of the Sherman Act make unlawful any such predatory conduct by the defendants.

Finally, the use of the five-year restriction has precedent. In a case brought by the United States against a dairy cooperative alleging an attempt to monopolize, the court entered a judgment that imposed a five-year restriction on acquisitions. *Mid-American Dairymen, Inc., supra,* 1977-1 Trade Cases ¶61,509, at 71,894.

D. *The Grant's Dairy Comment*

Grant's Dairy expresses concern that Agri-Mark, in order to meet its full supply agreement with Hood, will need to divert milk to Hood that would otherwise be sold to competing dairies. This possibility does not concern us because Hood does not purchase a sufficient quantity of milk to cause a scarcity in the supply area and a New England dairy can purchase milk from suppliers other than Agri-Mark.

In 1978, dairymen in the New England supply area produced 7,499.5 million pounds of raw milk. Of that amount, Hood purchased 13.7%. Grant's Dairy is located in Maine. Maine laws and regulations arguably make that state a geographic submarket for the supply of raw milk. In 1978 Hood only purchased 16.5% of the total 378.1 million pounds of milk received by Maine dairies regulated by the Maine Milk Commission. Further, Hood's requirements throughout New England for raw milk in 1978 amounted to only 38.8% of the milk produced by Agri-Mark members. Since Agri-Mark must sell the remaining 61.2% of its members' output, it will need to maintain viable trade relations with Hood's competitors, including Grant's Dairy. There is no reason, therefore, to predict that Agri-Mark will fail to deliver adequate supplies to its customers other than Hood. If it did, those customers would turn to other suppliers for their raw milk requirements.

Grant's also asks whether the final judgment in this case should include a provision that would require Hood to offer handling and separating charges for skim milk at competitve, cost-based prices. Grant's believes that it has no feasible alternative other than Hood and Agri-Mark for its supply of skim milk.

No facts have arisen in this case that lead us to believe that either Agri-Mark or Hood, individually or combined, have a monopoly over the production of skim milk in New England or any geographic sub-market within New England. Even if the companies combined controlled an unduly large market share of the skim milk production, we believe that potential competition from new entrants would regulate the price of skim milk better than any decree could under an arbitrary cost-plus formula. Skim milk can be produced by pumping raw milk through machinery which is readily available. There are no barriers that would prevent Grant's or other dairies or cooperatives from acquiring such machinery should Hood's price for skim milk rise to non-competitive levels.

E. *The Fairdale Farms Comment*

Fairdale Farms, a dairy in Bennington, Vermont, recommends that the decree include "restraints against violations of antitrust laws * * * in processing, packaging and distributing of fluid dairy products." (Comment, p. 4.) Specifically, Fairdale asks that Hood be enjoined from below cost and predatory pricing. This recommendation proceeds from Fairdale Farms' belief that dairies in New England sell processed milk at severely depressed prices due to a surplus of raw milk and persistent price competition by the dairies. Fairdale states that the Hood/Agri-Mark/Agway transaction and Agri-Mark's control of Hood will give Hood cost advantages that will enable it to become an "ultra-aggressive" dairy to the detriment of competing dairies.

The proposed judgment and the five agreements between Agri-Mark and Hood isolate the operations of Hood from Agri-Mark. In this isolation, any vigorous price competition in the sale of processed milk by Hood will follow from efficiences gained or from reasons other than anticompetitive effects proceeding from the instant transaction.

A crucial theory of the Complaint was that competition in the sale of processed milk might be lessened because Agri-Mark and Hood could coordinate supply and pricing decisions to the advantage of both. The proposed judgment was designed to ensure that Agri-Mark and Hood will make pricing and supply decisions independently of each other. Paragraph IX of the proposed Final Judgment enjoins Hood and Agri-Mark from having any common directors, officers or management. It also forbids Hood and Agri-Mark from discussing with each other prices or terms and conditions of sale of raw or processed milk. Thus, under the proposed judgment the two companies will operate independently of each other under peril of contempt of court proceedings.

Fairdale Farms is incorrect in stating that Agri-Mark will be the "operator of Hood's hauling, processing, packaging and distribution facilities." (Comment, p. 3.) Under the agreements between Hood and Agri-Mark, Agri-Mark has title to Hood's milk processing facilities but it has leased them to Hood which will operate the facilities under its own direction and management. Agri-Mark will haul milk from the farm to Hood's facilities but that is no more than Agri-Mark does for other dairies. By hauling milk to a dairy, which Yankee has done in the past, Agri-Mark will not obtain control of the dairy's operations or make the dairy's decisions on price and output.

Fairdale Farms has suggested that below cost pricing should be enjoined. As long as a final judgment in this case assures that Hood will price its products independently of Agri-Mark's influence, there is no reason to incorporate into a final judgment provisions that would interfere with Hood's pricing practices and possibly deny benefits to the consumers. Below cost pricing by a firm with monopoly power and below cost pricing with an intent to monopolize coupled with a dangerous probability of achieving the monopoly are anticompetitive acts made illegal by Section 2 of the Sherman Act, 15 U.S.C. 2. Hood does not now have monopoly power in the sale of processed milk in New England, nor do we have any information which indicates that Hood intends to attempt to monopolize that market. A consent judgment should only contain provisions that are reasonably related to the facts and theory of the underlying compliant. *See National Broadcasting Co., supra,* 449 F. Supp. 1127 at 1137 & 1145. The circumstances of this case provide no foundation for incorporating into the Final Judgment predatory pricing provisions already contained in the antitrust laws.

F. *The NAMMR Comment*

A close reading of NAMMR's comment suggests that that organization chose to ignore the explanation of the proposed Final Judgment contained in the Competitive Impact Statement ("CIS"). For the most part, NAMMR's comments attacking the proposed judgment are answered by the CIS itself, the rationale of which NAMMR has not addressed. Rather than repeat the CIS here, we have briefly dealt with NAMMR's objections to the proposed judgment, with references to relevant explanations in the CIS.

Pages 5–9 of NAMMR's comment take issue in numbered paragraphs with the United States' position in this case. Below we respond to these comments by paragraph.

1. NAMMR Paragraph 7

NAMMR suggests without explanation that areawide premiums inevitably flow from a series of occurrences which could conceivably follow the entry of the proposed judgment. Aside from the speculative nature of NAMMR's suggestion, two flaws in this comment render it moot. First, as explained in pages 6–12 of the CIS, paragraph IV of the proposed judgment deprives Agri-Mark of tools required to sustain premium pricing in New England. NAMMR did not address the rationale of the proposed judgment or the CIS on this point, so we are unable to discern why NAMMR concludes that the proposed relief will fail in its intended purpose. We continue to believe that forbidding the type of predatory pricing described by paragraph IV will ensure that any premium pricing Agri-Mark ever imposes will be ephemeral.[5]

[5] NAMMR's comment does not recognize that paragraphs IV A and IV B must be read together to appreciate their impact on premium pricing. As explained in the cited section of the CIS, the

Footnotes continued on next page

NAMMR suggests nothing to undermine the United States' position in this regard. The Community Nutrition Institute agrees with the United States on this point (CNI comment, page 1).

The second flaw in NAMMR's comment is that even NAMMR only projects that Agri-Mark will gain approximately 50% of the supply market (page 5).[6] As the above cited section of the CIS suggests,[7] and as the comment of Mr. Townsend, Commissioner of the New Hampshire Department of Agriculture, points out, with only approximately 50% of an area's producers as members, Agri-Mark lacks the market power to increase the price of milk to its customers, that is, to impose premiums. This results in part from the ease with which Agri-Mark members can leave the cooperative and market their milk in competition with it, which leads to the subject discussed in paragraph 8 of NAMMR's comment.

2. NAMMR Paragraph 8

NAMMR questions whether the proposed judgment's provisions regarding Agri-Mark's "locking-in" of members will be effective. NAMMR suggests that Agri-Mark will prevent members from leaving by not returning capital to them.

As stated at page 4 of the CIS, the relationship between market share and market power is weaker with respect to cooperatives than with respect to industrial concerns. This is because cooperative members rather than the cooperative itself own the means of production (cows, barns, etc.). Members of dairy cooperatives have incentives to leave the cooperative and compete with it when the cooperative charges supra-competitive prices (premiums).

As explained at pages 13–15 of the CIS, we were concerned that Agri-Mark's board would have the power to discriminate in the return of equity to member producers in such a way as to prevent members from leaving the cooperative. That is, we feared that Agri-Mark would repay equity to members who retired, but not to members who left the cooperative to compete with it. This would give members a great incentive to stay in Agri-Mark until they retired. Such discrimination in payment of equity would make Agri-Mark's market share more indicative of its market power because it would tie the means of production to the cooperative.

Paragraphs V and VIII eliminate this problem by forbidding discrimination against members who leave Agri-Mark in order to compete with it. NAMMR's comment that Agri-Mark could return "no equity contributions nor retained earnings for a long period of time" simply misses the point. As long as producers are not disadvantaged by leaving the cooperative compared to staying in it, there is no unlawful incentive to remain in the cooperative. The proposed judgment would require Agri-Mark to pay producers equity and retained earnings in the order in which they leave the cooperative. In the absence of discrimination against members who leave to compete with Agri-Mark, there is no antitrust concern. If the cooperative chooses not to repay member equity, producers are as well off financially by leaving the cooperative as by staying in it.

3. NAMMR Paragraph 9

Our response to this paragraph and other comments bearing on the "Foreclosure" issue is set forth below in Section III H of this response.

4. NAMMR Paragraphs 10–11

NAMMR suggests that Agri-Mark and Hood will voluntarily renew their one-year supply agreement. NAMMR also questions what the effect of the proposed judgment's ban on multi-year supply agreements will be.

The Complaint alleged that the 10-year Agri-Mark/Hood full supply agreement would violate Section 3 of the Clayton Act (paragraphs 27–28). The Complaint requested that Agri-Mark and Hood be enjoined from entering any supply agreement of an unreasonable duration (paragraph 5 of the Prayer). As explained at page 19 of the CIS, the Department has for some time recognized the legitimacy of one year supply contracts between cooperatives and dairies. NAMMR's comment on this point raises a good deal of speculation, but fails to address the obvious accomplishment of the proposed judgment. Hood and Agri-Mark will both be free in the future to make the supply arrangements they believe advantageous. The supply agreement created a 10-year "clog on competition" with options to renew for another 10 years, all in violation of Section 3 of the Clayton Act. This clog has been removed, and the Complaint sought nothing more in this regard.

Finally, NAMMR comments that this acquisition is a greater evil that if Hood had made unlawful horizontal acquisitions (paragraph 11). We note that the antitrust effects of a cooperative's acquisition of a dairy depends upon the circumstances of the case and the intent of the parties. This can be contrasted with horizontal mergers in concentrated markets where, because one competitor is always eliminated, competition is invariably lessened and the public necessarily suffers. Compare *United States* v. *Philadelphia National Bank*, 374 U.S. 321, 362–63 (1963) with *Freuhauf Corp.* v. *Federal Trade Commission*, 603 F. 2d 345, 351–52 (2nd Cir., 1979). The Second Circuit has recognized that vertical acquisitions may have beneficial aspects. *See Freuhauf, supra*, at 352. NAMMR's comment is especially inapplicable to the Hood/Agri-Mark/Agway transaction, which may capture various efficiencies for the benefit of the farmer members without hurting consumers. See generally the comments of Mr. Howard C. Townsend and Dean Harry A. Keener in this regard.

5. NAMMR Paragraph 12

In a comment related to that discussed above, NAMMR suggests that Hood and Agri-Mark will not be independent of one another. NAMMR also suggests that Agway and Agri-Mark are substantially identical entities.

Paragraph IX of the proposed judgment enjoins Hood and Agri-Mark from having any common director, officer, or management. It also enjoins Hood and Agri-Mark personnel from discussing prices for raw or processed milk other than as necessary to arrange sales between themselves. Moreover, Agway will own all of Hood's stock, and Agri-Mark will own only Hood's assests. Those assets will be out of Agri-Mark control since they are leased back to Hood under a long term lease. NAMMR nevertheless asserts that "Agri-Mark and hood will be in effect almost a single entity" (page 5) and that "there will be no *de facto* isolation or separation under the constraints" of the proposed judgement (page 8). NAMMR provides no bases for these statements.

Apparently NAMMR fears that hood and Agri-Mark will perceive themselves as having common goals which will lead to some type of predatory activity.[8] However, in order for Agri-Mark or Hood to jointly predate on other dairies or cooperatives, there would need to be coordination or control of one by the other as well as open and direct communications concerning pricing strategies. Paragraph IX forbids such control or communication.

6. NAMMR Paragraph 3–D

Subparagraphs A–C and E of paragraph 3 of NAMMR's comment merely capsulize NAMMR's stated objections to the proposed judgment. We have responded to these above. Paragraph 3–D, however, suggests that any final judgment should restrict Agri-Mark's future growth, a suggestion not yet addressed.

Congress, in the Capper-Volstead Act, 7 U.S.C. 291, provided that producers could voluntarily form cooperatives to market their production without violating the antitrust laws. The United States did not allege that Agri-Mark's formation violated the antitrust laws nor, under the Capper-Volstead Act, could it have done so. If, in the future, additional dairy producers wish to join Agri-Mark, they may do so. There is no basis whatsoever for enjoining Agri-Mark from future growth.[9]

7. A Hearing Is Unnecessary in This Case

NAMMR suggests that the Court should hold "hearings" prior to entry of the proposed

---

Footnotes continued from last page primary importance of paragraph IV A as it relates to premiums is to broaden the coverage of paragraph IV B of the proposed judgment. Paragraph IV B prevents Agri-Mark from granting specific anticompetitive price concessions to Hood. Paragraph IV A broadens this ban to prevent Agri-Mark from granting such anticompetitive concessions to other dairies. Without these concessions, any premium pricing will be ephemeral. NAMMR did not address this theory.

[6] Agri-Mark accounts for perhaps 35% of the milk produced in the relevant area. CIS at 4. The Complaint alleged that Agri-Mark intended to increase its membership until it marketed from 40% to 53% of milk produced in the New England milkshed. Complaint, paragraph 17.

[7] "[T]o charge premiums on any long-term market-wide basis a cooperative must control so much of the milk supply practicably available to handlers that handlers have no choice but to deal with it." CIS at 8–9.

[8] NAMMR argues that Agri-Mark's members "substantially" own Agway. This is not true. Agway consists of more than 123,000 producer-members, while Agri-Mark has fewer than 4,000 members. Moreover, many New England dairy farmers who do not belong to Agri-Mark are Agway members. Thus one cannot conclude, as NAMMR does, that Agri-Mark and Agway are merely two reflections of the same group of farmers.

[9] Paragraph X of the proposed judgment does, however, limit Agri-Mark's ability to merge with any other cooperative owning a processing facility.

Final Judgment so that "affected persons" can testify and provide "written and documentary" materials to the Court. The APPA provides that the Court must make a determination that entry of the proposed consent judgment is in the public interest before entering that judgment. The statute provides that in making such a public interest determination, the Court "may", *inter alia*, conduct proceedings involving the taking of testimony and documentary evidenced, and "take such other action in the public interest as the court may deem appropriate." 15 U.S.C. 16(f)(5). The statute does not require the Court to hold hearings, but directs the Court to take such action as it deems appropriate. As explained more fully in section I of this Response, Congress intended courts to determine the public interest issue in the least complicated and least time-consuming way possible. Evidentiary hearings should be used only in extreme cases.

In the instant case, an evidentiary hearing would be inordinantly time consuming and would not in any way further the Court's understanding of facts relevant to the determination it must make. There has been no claim of bad faith or malfeasance on the part of the United States in settling this case. *See AMPI, supra*, 394 F. Supp. at 41, and cases cited. Nor has NAMMR, or any other commentor, suggested the existence of relevant facts which the United States failed to consider in negotiating and consenting to the proposed judgment. Rather, NAMMR invites the Court to substitute its judgment for the United States' concerning the wisdom of the proposed judgment, a substitution which the APPA neither contemplates nor allows. *Mid-America Dairymen, Inc., supra*, 1977-1 Trade Cases at 71,979-980; *Gillette, supra*, 406 F. Supp. at 716. Moreover, as demonstrated in the preceding sections of this Response, NAMMR does so without having adequately considered or understood the effect of the proposed judgment as explained in the CIS.

NAMMR has used the comment process as a forum to set forth its views of cooperatives in general and various irrelevant facts in particular as has NIDA (the National Independent Dairies Association). Such comments do not portend a useful or focused hearing should the Court accede to NAMMR's request for evidentiary hearings at which any interested person could present evidence.[10] NAMMR'S comment, for example, indicates that NAMMR believes that:

This acquisiton is one more milestone on the road toward total domination of the nation's fluid milk supply by a few regional super cooperatives who are linked together with anticompetitive super polling agreements. (NAMMR comments, p. 3.)

NAMMR apparently views as relevant certain "reported" activities of a cooperative in Florida (NAMMR comment, p. 7). Similarly, NIDA deems relevant its view that the acquisition of Hood is "the latest step in the continuing march of the huge and economically powerful agricultural cooperatives to gain shared monopoly control of important food markets * * *." (NIDA comment, p. 1.) NIDA also views as relevant information allegedly relating to "the anti-private enterprise and predatory activities of the huge regional agricultural co-operatives" (NIDA comment, p. 2) as well as various acquisitions and divestitures by cooperatives in the Midwestern United States (NIDA comment at 2-3).[11] Such clear signals from these two trade associations indicate that any evidentiary hearing on the proposed judgment would not be an uncomplicated or efficient direction for the Court to pursue in making its public interest determination.

The Court need only consider the proposed judgment as explained by the CIS, the comments thereon, and this Response thereto. Such consideration will amply demonstrate that the proposed judgment satisfies the public interest standard of the APPA as interpreted by the courts.

G. The NIDA Comment

The National Independent Dairies Association ("NIDA") filed a three page comment the bulk of which is not a substantive discussion of the proposed judgment.[12] NIDA's substantive comment is that any consent decree in this case should incorporate various provisions of the Robinson-Patman Act and state sale-below-cost laws. Part of NIDA's ground for this type of relief is the alleged ability of Agri-Mark to recoup losses on Hood's bottled milk sales "through price premiums on fluid milk paid by" dairies (NIDA comment, p. 3). As explained in response to NAMMR's comment, however, Agri-Mark will not be able to charge premiums due to its low market share and, more importantly, due to paragraph IV of the proposed judgment. Thus, NIDA's fears are based at least in part on an unexplained and unfounded expectation that Agri-Mark will charge premiums for raw milk.

All defendants are obligated to obey all federal and state laws. The United States uncovered no evidence that any defendant had violated or intended to violate the statutes NIDA discusses. NIDA apparently fears concerted action between Hood and Agri-Mark which would result in predatory below cost pricing by Hood. As discussed in sections III E and III F (5) of this Response, any such activity would violate paragraph IX C of the proposed judgment which enjoins Hood and Agri-Mark from discussing pricing with one another. Any violation of paragraph IX C would be easy to prove, compared to proof of sales below "cost," however one defines "cost." NIDA's concern, therefore, appears not only to be without any factual foundation, but adequately met by paragraph IX. For all these reasons, there is no basis for enjoining the defendants from violating these statutes.

H. *The "Foreclosure" Issue*

Prior to Agri-Mark's acquisition of Hood's assets, Hood was splitting its milk purchases between Hood independents and competing cooperatives of dairy farmers. Many dairy farmers will now be foreclosed, at least in the short run, from selling milk to Hood unless they join Agri-Mark. This is because Hood, as part of this transaction, intends to purchase substantially all of its milk requirements from Agri-Mark.

Seven persons commented on the relief provided in the proposed Final Judgment for dairy farmers who were foreclosed from selling milk to Hood. CNI noted that provisions requiring Hood to continue to purchase milk from Hood independents until March 1, 1981, and permitting Hood independents to terminate all agreements with Agri-Mark (paragraphs VI C and VII) provide additional opportunities for Hood independents to find new markets for their milk and that the prohibition of long term supply agreements between Hood and Agri-Mark (paragraph VI A) should ease all New England dairy farmers' fears of being permanently excluded from supplying milk to Hood. Robert Foster, a Vermont dairy farmer, and Fairdale Farms, a Vermont dairy, also expressed their support for these provisions.

M. Jerome Diamond, Vermont's Attorney General, recommended that paragraphs VI C and VII be expanded to cover all Vermont dairy farmers.[13] Northern Farms Cooperative Inc. (NFC), a Vermont dairy farmers' cooperative, and two New England dairy farmers, Mmes. Cheeseman and Rowbotham, recommended that one or both of these provisions be extended to cover NFC and former Yankee members.

NAMMR believes that paragraph VI C should be changed to require Hood to purchase milk from Hood independents indefinitely. It apparently recommends that a final judgment should not be entered in this case until there is an opportunity for all to reflect upon the alternative markets chosen by every Hood independent who did not join Agri-Mark (NAMMR comment, page 6).[14]

[10] Only NAMMR has asked for a hearing. NAMMR also asks to appear as *amicus*.

[11] The United States has always viewed the transaction at issue as having particular and unique anticompetitive potential which should be, and through the proposed Judgment will be, prevented. It was never any part of the United States' theory that this transaction was part of any nationwide conspiracy.

[12] One aspect of NIDA's opening comments, while not bearing on the substance of the decree, demands a response. At page 2 of its comment, NIDA deprecates the enforcement efforts of the Department with respect to consent decrees, citing a decree against Mid-America Dairymen, Inc. NIDA says "Not only has Mid-America not divested itself of the three cheese plants as ordered [in the decree], it subsequently acquired [two dairy operations]." The Department brought contempt proceedings against Mid-America Dairymen, Inc., for its failure to comply with the divestiture provision of the decree, but was unable to obtain relief from the court. The Department has also brought a contempt action and, separate from that, obtained supplemental relief under its decree against another dairy cooperative, Associated Milk Producers, Inc. Demonstrably, the United States has been vigilant in enforcing its consent decrees against dairy cooperatives.

[13] Vermont's comment variously recommends that additional relief should be extended to Vermont dairy farmers and all producers. We understand from a telephone conversation with the Attorney General's office that Vermont's recommendation was meant to be limited to Vermont dairy farmers.

[14] Some numbers may help to put all of the comments on foreclosure in perspective. Just prior to Agri-Mark's acquisition of Hood's assets, Hood was purchasing milk from approximately 1,882 dairy farmers. Of them, 896 were independent producers and the remainder were members of Yankee or

Footnotes continued on next page

As some of the commentors point out, the proposed Final Judgment does not provide the same relief to former Yankee members and members of other cooperatives that it provides to Hood independents. The critical comments by Vermont, NFC and Mmes. Cheeseman and Rowbotham on this issue considered collectively amount to the proposition that the proposed Final Judgment is deficient because the relief it provides on foreclosure favors Hood independents over other dairy farmers. The commentors suggest that all dairy farmers in New England, not just Hood independents, should be guaranteed a market with Hood for their milk and, if they joined Agri-Mark, they should be permitted to terminate their agreements with Agri-Mark. In light of our overall purpose in this action and the relief obtainable by the proposed Final Judgment, relief of this order regarding foreclosure is unnecessary.

Although we believe that the relief on foreclosure in the proposed Final Judgment is adequate, we recognize that some few dairy farmers may be unhappy because they too are not being guaranteed a market with Hood. It was never our objective, however, to so protect every New England dairy farmer. This transaction would have violated the antitrust laws because its effect may have been to substantially lessen competition. We were concerned about much more than foreclosure. Anticompetitive effect would have resulted from foreclosure *and* because the combination of Hood and Agri-Mark in the form initially proposed may have been powerful enough to dominate the New England dairy industry. Consistent with the principle that the Clayton Act was meant to protect *"competition, not competitors", Brown, Shoe Co.* v. *United States,* 370 U.S. 294, 320 (1961), (emphasis in original), our purpose in this action was not to guarantee every dairy farmer in New England a market for this or her milk, but rather to preserve in New England the conditions necessary to ensure that raw milk is sold to all dairies at competitive prices. We did not view foreclosure in isolation when we brought this action and we urge the Court not to do so when determining whether the proposed Final Judgment is in the public interest.

The proposed Final Judgment will accomplish what we set out to accomplish by filing this action. It ensures that the acquisition may be consummated without reducing competition in the New England milk industry by depriving Agri-Mark and Hood of the tools which might empower their combination to have undesirable effects in the marketplace. Provisions of the proposed Final Judgment, outlined above, do this by limiting the parties' conduct in important respects. These provisions are explained in detail in the CIS at pages 5–21.

Certain provisions of the proposed Final Judgment specifically address foreclosure. As initially proposed by the parties, the transaction would have foreclosed many dairy farmers from selling milk to Hood. We were particularly concerned for the large block of Hood independents, who, as independents, were not members of a cooperative which could have assisted them in finding new markets for their milk. After the transaction was announced, they were faced with imminent foreclosure from their market in the spring or flush season when milk production is highest relative to demand. We addressed their problems in paragraph VI C, which requires Hood to purchase milk from them until March 1, 1981, and in paragraph VII, which permits them during a 20 day grace period to terminate all agreements with Agri-Mark without suffering financial penalty. These provisions give Hood independents who joined Agri-Mark in the spring because they thought they could not find another market an opportunity to leave Agri-Mark and ensures that they all will have a reasonable opportunity to find a new market for their milk. The proposed Final Judgment also provides general relief from foreclosure to all New England dairy farmers. They all may benefit from paragraph VI A which enjoins Hood and Agri-Mark from entering into a supply agreement with a duration of more than one year. By prohibiting the initially contemplated ten year full supply contract with two 5 year options to renew, the proposed Final Judgment eliminates the certainty that Hood and Agri-Mark will continue to deal exclusively with each other for the next twenty years.

NAMMR's view is that paragraph VI C, by requiring Hood to purchase milk from Hood independents until March 1, 1981, does not give Hood independents who choose not to join Agri-Mark enough time to find another market for their milk. NAMMR recommends a judgment guaranteeing Hood independents a market with Hood forever. In our view that is unnecessary. We sought only to give Hood independents a reasonable opportunity to decide where they want to market their milk. As we explained in the CIS at page 16, paragraph VI C gives them, in effect, one full year, including the favorable fall short season, to find new markets. It is our belief that the one year period will allow most reasonably efficient dairy farmers to find satisfactory markets.

The additional relief on foreclosure suggested by the other critical commentors—that all New England dairy farmers should be treated as Hood independents are treated in the proposed Final Judgment—would be burdensome to Hood and to Agri-Mark and a windfall for many of the dairy farmers they seek to protect. None of these dairy farmers that the commentors speak of had previously been guaranteed a market by Hood; many of them did not even do business with Hood.[15] Substantial and new obligations would attach to Agri-Mark and Hood so that these dairy farmers could reap benefits that they did not previously enjoy.

Most important, the relief suggested by these commentors is not necessary in this case. Provisions in the proposed Final Judgment relating to foreclosure were for the most part designed to benefit Hood independents because they were not organized in cooperatives which could have assisted them in finding new markets for their milk. We were concerned that many of them felt compelled to join Agri-Mark without complete information on alternative markets. Other New England dairy farmers shipping to Hood and to others were not similarly situated. Yankee members through their delegates voted almost unanimously to merge with Agri-Mark. Other cooperatives whose members were shipping to Hood were in a position to assist their members in finding other markets. Other dairy farmers who were not shipping to Hood were barely, if at all, affected by the transaction.

In sum, the proposed Final Judgment did in paragraphs VI C and VII favor Hood independents over other New England dairy farmers with respect to relief on foreclosure but only because they were the dairy farmers most likely to be adversely affected by foreclosure from Hood. Paragraph VI A provides adequate relief for the dairy farmers who may have been touched by this transaction.

Conclusion

The Competitive Impact Statement and this Response to comments demonstrate that the Proposed Final Judgment serves the public interest. Accordingly, after publication of this Response in the Federal Register pursuant to 15 U.S.C. 16(b), the United States will move this Court to enter the Final Judgment.

Dated: November 6, 1980.

Respectfully submitted,

Michael P. Harmonis,

Kenneth L. Jost,

Richard W. Pierce,

Attorneys for the United States, United States Department of Justice, Washington, DC 20530, 202-724-6465.

Appendix A—Comments

1. Howard C. Townsend
2. Harry A. Keener
3. Robert Foster
4. Roderick Towne—Ruth Towne
5. Alice Cheeseman—Priscilla Rowbotham
6. Massachusetts Milk Control Commission
7. Community Nutrition Institute (CNI)
8. Grant's Dairy
9. Fairdale Farms
10. National Association for Milk Marketing Reform (NAMMR)
11. National Independent Dairies Association (NIDA)
12. M. Jerome Diamond, Attorney General, Vermont
13. Northern Farms Cooperative (NFC)

Footnotes continued from last page

other cooperatives. We understand that as of September 23, 1980, 3,703 dairy farmers had joined Agri-Mark. This group consists of 3,176 former Yankee members, 190 former members of other cooperatives and 337 independent dairy farmers including 304 Hood independents. During the summer, 34 Hood independents terminated their membership in Agri-Mark pursuant to the July 16, 1980, Stipulation and Order between the parties in this case.

[15] These commentors speak on behalf of all Vermont dairy farmers and members of Yankee and NFC. We understand that a large majority of these dairy farmers did not ship their milk to Hood. Moreover, even Hood independents did not enjoy a fixed long term commitment from Hood to purchase their milk.

The State of New Hampshire, Department of Agriculture, Office of Commissioner

September 5, 1980

Mr. Allen L. Marx, Assistant Chief General Litigation Section, Anti Trust Division, Department of Justice, Washington, D.C. 20530

Dear Mr. Marx: As Commissioner of Agriculture for the State of New Hampshire and as a lifelong dairy farmer I have followed the development of the new milk marketing and processing cooperatives with great interest.

Originally I did have some reservations about the proposals and the effect they might have on both producers and consumers. I have now concluded that the purchase of H. P. Hood, Inc. by Agri-Mark will benefit both the dairy farmers and consumers of the northeast be assuring our dairy farmers a market for their milk. Consumers will benefit by a stabilized milk market which I am confident will result from the farmer owned and farmer controlled marketing vehicle.

There have been concerns expressed by some, which I shared also, regarding any unwarranted monopolistic overtones of the proposed merger. I have satisfied myself that this would not be the case even if the total market controlled by the proposed cooperative were somewhat in excess of 50% of the total.

As Commissioner of Agriculture I endeavor to improve long range economic position of agriculture in such a way as to benefit the consuming public as well. The merger under consideration will offer an opportunity for the farmer to enjoy a greater percentage of the consumer dollar spent for milk by sharing in the profits formally distributed to the stockholders. This can be done without increasing the cost of milk to the consumer.

I join my fellow Commissioners of Agriculture in requesting favorable action by the Justice Department on the Agri-Mark/Hood proposal presently under consideration.

Sincerely,

Howard C. Townsend,

Commissioner N.H. Department of Agriculture.

Harry A. Keener.

Post Office Box 165, Durham, New Hampshire 03824

September 8, 1980

Mr. Allen L. Marx, Assistant Chief, General Litigation Section, Anti-Trust Division, Department of Justice, Washington, D.C. 20530

Dear Mr. Marx: I am writing to urge that you give permanent approval for Agri-Mark Inc. to carry on the milk processing and marketing activities of the H. P. Hood Co. This matter relates to the case of the U.S. vs Agri-Mark Inc. et al.

I take this position because I believe that the New England dairy industry must be given the kind of stability that this arrangement offers and that the consumers of the region must be assured of an adequate supply of dairy products at reasonable prices in the years ahead. I believe that the temporarily approved arrangement does both of these things. Both producers and consumers will suffer if a substantial and equitable force is not created and allowed to operate on a New England wide basis. The restrictions already imposed appear to be adequate to protect the interests of both consumers and dairymen.

I make these comments to you on the basis of my 37 years (1941–78) as a faculty member of the University of New Hampshire working closely with the dairy industry, milk processors and consumers. The last 17 years of my tenure were as Dean of the College of Life Sciences and Agriculture and director of the N.H. Agricultural Experiment Station.

I hope that my views will be helpful to you.

Very truly yours,

Harry A. Keener.

September 28, 1980

Mr. Alan L. Marx, Assistant Chief, General Litigation Section, Antitrust Divison, Department of Justice, Washington, D.C. 20530

Dear Sir: I am a dairy farmer in Middlebury, Vermont, chairman of Vermont's Governor's Agricultural Advisory Board, and a former Director-at-Large for Yankee Milk. I have been actively involved in the dialogue with fellow farmers in developing the Agri-Mark Hood marketing system for the dairymen in New England Market.

Recently, it has been brought to my attention, through reports in the media and by calls from concerned dairymen, that comments have been filed alledging discrimination in the stipulation for not including all producers in the release provisions. I would like to express to you the real concern and frustration on the part of those farmers that joined Agri-Mark that the opinions of a few will prevail. These farmers joined Agri-Mark by choice. In many cases, they approached it as a sound business decision, one which they felt that they could accomplish more collectively than individually over the long term. They committed their personal resources to a common long term captial cause, only to see a few others, when the short term winds blew more favorably, seek to break the long term commitment to a venture that they originally chose through a signed contract.

Because the "Hood independents" had no cooperative organization to provide them with an alternative market when the Hood supply was contracted to Agri-Mark, the stipulation for a release provision seems reasonable. However, those who were members of other cooperatives had a guarantee by that cooperative of a market at the time of their choice to join Agri-Mark. This is the difference and the reason for the stipulation pertaining just to the "Hood independents".

Dairymen were given more than ninety days to consider the alternatives. Numerous meetings were held. Approximately 3700 dairymen indicated a willingness to pool their resources and capitalize a marketing system for their future. These farmers made their commitments based in part on the commitments of other dairymen like themselves, signing the same agreements. The "Hood independents" were a distinctly different group of producers than were the former Yankee Milk members and those who were members of other cooperatives.

The Agri-Mark—Hood system for marketing is a good one. The stipulations are workable in their present form, compromises were made, and further disruption and delay will only hurt dairymen in the future. Orderly marketing in a responsible manner must move forward. I would hope that the points of contention could be resolved quickly.

Sincerely,

Robert L. Foster,

Dairyman, RD #3 Route 116, Middlebury, Vt. 05753.

Towne-Ayr Farm
RD 2
Montpelier, Vermont 05602

September 17, 1980.

Judge Albert Coffrin, U.S. District Court, Federal Building, Burlington, Vermont 05401

Dear Judge Coffrin: We are writing to you to express our support for approval of the AGRI-MARK merger plan. We are active dairy farmers in the town of Berlin, Vermont with 126 head of Ayrshire dairy cattle of all ages. We belong to Cabot Co-Op Creamery, Roderick is a director. Our family has been active for over 50 years in the agricultural affairs of New England as Dad (Elmer E. Towne) served as Commissioner of Agriculture for 10 years. I am a two term legislator running for re-election and have served both terms on the House Agriculture Committee. With this brief summary in mind we feel that we have a good grasp of what is happening in the field of milk marketing.

Firstly, we feel that the agreement that has been reached is fair to everyone, including the independent producers. Marketing milk is a very complex proposition and it has always been a major concern of ours that so few farmers understand the selling of their product. Marketing is the weak link from the cow to the consumer. Secondly, we feel the merger agreement will not be detrimental to competition. This is a very regulated market. The farmer has precious little to say about the price he will receive for his product. However, we can thru our co-ops be guaranteed a market for all we want to produce. The co-ops balance the market by manufacturing a long list of cheeses and other products.

Lastly, we whole-heartily approve and have worked for the concept of vertical integration of the fluid and manufacturing markets. Farmers have a huge investment in land, buildings, machinery and cattle. Our co-ops are an important part of our total farm operation. If farmers are going to have reasonable returns on their investments, marketing methods will have to be consolidated so as to reduce the total cost of marketing.

Thank you for your consideration and I hope you will approve the agreement.

Cordially,

Roderick Elmer Towne,

Ruth H. Towne.

August 12, 1980.

Dear Sir: This letter is in response to your request for comments on the Agri-Mark tentative settlement.

1. Agri-Mark should agree to take non-member milk. Isolated farmers should not

have to join Agri-Mark or sell out as a penality for living a great distance from a market.

2. Under no circumstances should there be a deadline for signing for independents. People should join freely and not be forced by a fixed date.

3. Former Yankee Members, who have not signed with Agri-Mark, should have returned to them the balance of Equity Funds owed them, when Yankee is dissolved.

4. There should be an opportunity for Yankee Members to change their minds, whether they have signed or not, especially Yankee producers without a local market.

5. It's *very* important that pressure not be applied to independent truckers to make a choice between hauling for Agri-Mark or another dairy. If forced to make a choice, some independent farmers may be without a trucker to haul their milk.

If possible could you send us a copy of the tentative agreement between Agri-Mark and the Justice Dept.

Thank you for the efforts made by your Dept. in this dairy dilemma.

Sincerely,

Mrs. Alice C. Cheeseman,

Quaker Hill Rd. Unity Maine 04988.

Mrs. Priscilla Rowbotham.

R.F.D. 1, Fairfield Maine 04937.

The Commonwealth of Massachusetts
Milk Control Commission
Leverett Saltonstall Building, Government Center
100 Cambridge Street, Boston 02202
September 26, 1980

Alan L. Marx, Assistant Chief, General Litigation Section, Antitrust Division, Department of Justice, Washington, D.C. 20530

Dear Sir: In Re: Civil Action No. 80-174, U.S. District Court for Vermont, Defendents: Agri-Mark, Inc., H.P. Hood, Inc.

At its meeting of September 26, 1980, the Massachusetts Milk Control Commission, as an interested person, voted to file Comments with you for review and publication as provided in the Stipulation and Order and Proposed Final Judgment in the above designated matter.

Peter F. Hines, *Counsel.*

Please confirm receipt of this communication and attachment.

Comments

The laws of the several states concerned are in disarray as to the problem of proper security to be posted in the event of milk dealer defaults on the payment of milk shipped by the farmer-producer.

It is recommended that the Court—prior to entry of Final Judgment-appoint an expert to report and advise whether the parties to the action should join a producer protection fund to cover situations where present bonding may not be adequate.

A True Copy Attest:

Peter F. Hines,

Counsel Massachusetts Milk Control Commission Room 2100, 100 Cambridge Street Boston, Mass. 02202.

Community Nutrition Institute, 1146 19th Street, NW., Washington, D.C. 20036, (202) 833-1730
September 16, 1980.

Alan L. Marx, Assistant Chief, General Litigation Section, Antitrust Division, Department of Justice, Washington, D.C. 20530

Dear Mr. Marx: Over the past decade, the Community Nutrition Institute has become extremely concerned with the growing market strength of prominent dairy cooperatives. Dominant market shares allow cooperatives to control the movement of milk to market, and ultimately raise milk prices for consumers. Thus, we are pleased that the Justice Department will impose certain restrictions on the acquisition of the assets of H. P. Hood, a proprietary dairy, by Agri-Mark, a producer cooperative formed through the earlier merger of Yankee Milk and Agway.

The merger between Agri-Mark and Hood, and the subsequent full supply agreement, present a tremendous opportunity for Agri-Mark to expand its membership and "capture" the milk produced by independent dairy farmers. Under the original terms of the acquisition, many of the independent dairy farmers supplying milk to Hood would have felt pressured into joining Agri-Mark for fear of losing a market for their milk. The provision of the Consent Judgment requiring that Hood be willing to continue purchasing milk produced by independent producers until March 1, 1981, allows these dairy farmers to have the favorable fall season to find a new market for their milk. The prohibition of any supply agreement in excess of one year should ease dairy farmers' fears of being permanently excluded from supplying milk to Hood.

The Community Nutrition Institute supports the Consent Judgment's standardization of Agri-Mark's refunding policy. This provision will allow members of Agri-Mark to more easily leave that cooperative and compete with it. We also support the provision in the Consent Judgment that prohibits Agri-Mark from offering different prices to Hood's competitors or charging Hood different prices for raw milk depending on the geographic areas of Hood's customers. This stipulation should preserve the competition between milk processors and producers in the region.

We recommend, however, that the moratorium on the defendants' purchase of any milk processing plants in the New England area without the written consent of the Justice Department or the Court be extended from five to twenty-five years. We suggest this continuing surveillance so that the vertical integration which now characterizes this milk market does not worsen, and so that smaller independent processors can continue to provide competitive pressure to Hood without the fear of being preyed upon. In addition, we suggest the Justice Department keep a careful watch over any mergers between Agri-Mark and other producer cooperatives to make sure such mergers are completely voluntary.

We trust that the Justice Department will carefully monitor these mandated pricing and purchasing practices so that milk prices do not become unduly enhanced by the market power gained by Agri-Mark in the New England area

Sincerely,

Rodney E. Leonard,

Executive Director.

Thomas B. Smith,

Research Director, Consumer Division.

Rosanna L. Mentzer,

Research Associate, Consumer Division.

Grant's Dairy

562 Union Street, Bangor, Maine
October 1, 1980.

Mr. Alan L. Marx, Assistant Chief, General Ligation Section, Antitrust Division, Department of Justice, Washington, D.C. 20530

Dear Mr. Marx: The following comments are in response to the United States vs. Agri-Mark et al. as was published in the Federal Register/Volume 45, No. 149, pages 50990-50997, Thursday, July 31, 1980.

Basically the out of court settlement appears equitable. However, I feel that two points should be considered by the Justice Department before the settlement goes into effect.

1. The possibility exists that a handler (Grant's or other dairies) could actually lose its supply of milk from Agri-Mark Producers due to the fact that Agri-Mark is committed via a yearly contract to fulfill H. P. Hood's requirements.

2. The consent decree seeks to maintain competitiveness within the New England marketing area. However, plant consolidations (which I believe are sound business decisions) make handlers directly dependent on its competitor (H. P. Hood) to perform various services leading to separation and handling charges.

In discussing number 1, I would simply ask the question, "is it possible for a handler to lose all or a portion of his milk supply from Agri-Mark in order that Agri-Mark meet its *contract* obligations from H. P. Hood?" Nothing in the decree addresses the potential problem of short or long term diversion of milk from a given area to fulfill the contract requirements Agri-Mark to Hood. Because Maine is a vast state with numbers of milk producing pockets, more or less associated with dairy location, any diversion could literally strip any dairy of its supply while simply fulfilling a small fraction of the Hood contract. The problem seems to be that the decree deals only with price and terms of sale but that is of little importance if no sale is made.

Point number 2 reflects a concern that the out of court settlement will create the potential for an uncompetitive situation in the market place. This situation can be created when Yankee's Andover, Massachusetts operation is phased out.

Formerly Yankee's Andover facility supplied Grant's Dairy with approximately 600,000 pounds of skim milk monthly (approximately 20% of Grant's Class I usage).

This poundage is now supplied by Agri-Mark through H. P. Hood's Newport, Maine facility. H. P. Hood separates producer milk for Agri-Mark and assesses Agri-Mark for said separating. These costs are then passed on through Agri-Mark to Grant's Dairy. H. P. Hood has the potential to increase its separating charges above a reasonable rate with no feasible alternative to Grant's Dairy. In the past if such a situation had arisen, Grant's alternative would have been Yankee's Andover, Massachusetts facility.

Again I would like to clearly state the plant consolidations are an excellent business decision. I am not seeking to see the Andover, Massachusetts facility remain open. I am raising the question, "does the Department of Justice recognize that said consolidations are creating the potential for a handler to be dependent on its competitor, H. P. Hood, with respect to charges levied?" Shouldn't proper language be introduced which will assure handlers like Grant's that costs such as milk separating and handling charges remain at competitive, cost-based prices in the face of the effective elimination of competition?"

Sincerely yours,

Grant's Dairy, Inc.,

B. E. Grant,

President.

Fairdale Farms, Inc.

Bennington, Vermont 05201
Telephone (802) 442-6391

September 10, 1980

Alan L. Marx, Esquire Assistant Chief, General Litigation Section, Antitrust Division, Department of Justice, Washington, D.C. 20530

Re: *United States v. Agri-Mark, et al.*

Dear Sir: The following comments are respectfully submitted pursuant to *Competitive Impact Statement, Section V. Procedures Available for Modification.*

While the proposed Final Judgement appears to restore to dairy farmers the freedom to sell their milk to dairies of their choice, the realization of this freedom is dependent upon the ability of such dairies to continue to provide such marketing services as collecting raw milk, processing, packaging and delivering fluid dairy products. Unless these essential services continue to be performed by dairies (handlers) other than the defendants, then dairy farmers (producers) will not have the relief which is apparently intended in the proposed Final Judgement.

The problems of maintaining competitive viability in the processing, packaging and delivery functions are problems which urgently need prompt and positive attention. The degree of urgency in these matters is indicated by monthly reports issued by the Market Administrator, New England Marketing Area. These reports show recent declines in the number of handlers (dairies) as follows:

	Jan. 1979	July 1979	Jan. 1980	July 1980	Rate of decline (percent)
Pool handlers	90	86	82	80	11.1
Producer-handlers	35	35	33	33	5.7
Partially regulated and other Federal market handlers	8	7	8	8	
Totals	133	128	123	121	9.0
The same monthly reports show the producer rate of decline as follows	7571	7478	7386	7344	3.0

There is an obvious reason for the rate of decline of handlers being three times the rate of producers. Dairies (handlers) have to pay producer prices which are established by federal and/or state regulatory agencies reflecting indexed raw milk price supports mandated by Congress. Dairies have to sell this milk after being processed, packaged and delivered, at severely depressed prices due to the continuous surplus of raw milk. The price competition that persists in the sale of fluid milk products should, in the public interest, be carefully monitored to prevent the additional economic problems which arise from violations of antitrust laws.

Experience in competing with defendant Hood (since 1951 in the western Massachusetts area and since 1977 in the northern Vermont area) has been reasonably normal. The challenged transaction, however, drastically changes the competitive character of Hood. In the first place, control of Hood would be purchased by defendant Agway, Inc. According to its 1979 Annual Report, Agway's net sales were $2,049,080,356 (about four times Hood's), of which $919,139,876 (44.9%) came from petroleum operations. Of Agway's 1979 capital expenditures, 68% was invested in petroleum facilities.

Notes to Agway's 1979 financial statements include discussions of Texas City Refining Co., Inc.; Pro-Fac Cooperative, Inc.; Curtice-Burn, Inc.; Telmark, Inc.; Springfield Bank for Cooperatives, and others. Note 5(c) to financial statements appears to indicate that Pro-Fac Cooperative borrows from the Springfield Bank for Cooperatives and make corresponding loans to Curtice-Burns, a fruit and vegetable packer which owned 33% by Agway and 67% by Texas City Refining.

Agway's dicussion of its financial strengths and broad diversification, particularly when considered in connection with the low profitability and operating losses experienced by New England dairies in recent years, give rise to such questions as:

(1) Will Agway's "Retained margins" ($187,941,802 at June 30, 1979), or any part thereof, be used to take sales volume away from other dairies at below-cost prices?

(2) Will Agway's substantial borrowing capacity be used to expand its initial investment in Hood?

(3) Will possible losses from fluid milk operations be recovered as marketing service deductions from milk checks payable to Agri-Mark members, thus giving Agri-Mark a financial resource not available to their competitors?

(4) Will Agway, having purchased control of Hood and in a position to name Hood's management, and with Agri-Mark operating assets acquired from Hood, be able, through cooperatives' exemption from producer security bond requirements, to extend credit to dairy purchasers of raw milk in amounts which will eventually result in the transfer of ownership of such dairies to either Agway or Agri-Mark?

As described in your Competitive Impact Statement, defendant Agri-Mark, which was formed to participate in the challenged transaction, is New England's largest dairy farmer cooperative, and successor to Yankee Milk, Inc., formerly the largest dairy cooperative in New England. Here is an unusually large cooperative, not only in control of a major part of New England's milk supply, but also the proposed operator of Hood's hauling, processing, packaging and distributing facilities. Here is a dairy (handler) which proposed a transaction which the Justice Department states would have been in violation of Clayton Act, Sections 3 and 7. Furthermore, defendant Agri-Mark's predecessor, Yankee, has a history of similar complaints (Fairdale v. Yankee, Civil Action File 75-140).

In view of the above it is respectfully urged that the Final Judgement include provisions which will result in restraining defendant Agri-Mark as much in its proposed processing, packaging, sales promotion and delivery operations as Agri-Mark has been restrained in the procurement and sale of raw milk.

In making this request, the restraints included in Section X of the proposed Final Jugement have been noted. But in efforts to expand sales of processed products there are means other than "* * * purchasing, consolidation with, acquiring control of or leasing * * *" which can be used illegally. These other means include: Cutting prices below cost, predatory pricing, providing so-called free services, such as use of refrigeration equipment, stamping and display of products in dairy case, use of returnable shipping cases for merchandising other than supplier's products. Whenever these expensive practices are used to acquire a new customer, or to force a competitor out of a "split stop", the competing dairy has to either duplicate these costly practices or go out of business. Either from meeting below-cost pricing or providing unbilled services, the competitor with less financial strength usually finds himself in a precarious financial situation indicated by an inability to borrow funds necessary to continue operations or inability to obtain the producer security bonds required by regulatory authorities. When this happens the ultra-aggressive dairy with stronger financial resources does not have to purchase, consolidate, acquire control, merge or lease. As the weakened competitor becomes financially unable to continue to deliver acceptable quality and service, the ultra-aggressive, more strongly financed dairy simply supplies more of the customers fluid dairy product requirements.

The unique financial advantages available to cooperatives; together with the size,

diversification and financial strength of defendant Agway; and the record of compliants which have been filed against Agri-Mark's predecessor, Yankee Milk, Inc., are the basis for this request that the Final Judgement be expanded to include appropriate restraints against violations of antitrust laws, not only in the procurement of raw milk, but also in the processing, packaging and distributing of fluid dairly products.

Respectfully submitted,

Fairdale Farms, Inc.,

Robert T. Holden,

President.

United States District Court for the District of Vermont

United States of America, Plaintiff, v. Agri-Mark, Inc., Agway Inc., and H. P. Hood, Inc., Defendants. Civil Action No. 80-174.

Opposition of National Association For Milk Marketing Reform to Proposed Final Judgment by Consent

1. The National Association for Milk Marketing Reform, hereafter referred to as NAMMR, opposes, on behalf of the Association and its members, the Proposed Final Judgment now before the Court. NAMMR requests the Department of Justice to withdraw its consent to this Proposed Final Judgment under the terms thereof and in compliance with the United States Code and to notify the Court and all parties that it seeks full adjudication of the issues and the full relief prayed for. NAMMR's reasons are set forth hereafter. In the event the Department should reject this request for withdrawal of consent, hearings on this Proposed Final Judgment are indispensable.

2. NAMMR, in the alternative, petitions the Department of Justice to request the U.S. District Court to delay entry of judgment for an additional period of 60 days or for such reasonable period of time as the Court may order, after the close of the present sixty-day period for comments, during which time the Court may hold hearings for the purpose of allowing affected persons to appear and give testimony and present written and documentary materials which are necessary in these proceedings and will demonstrate and prove that the Proposed Judgment will not protect competition, will permit injury, and is not in the public interest.

3. NAMMR's reasons for its request for withdrawal of consent and, in the alternative, its petition for delay and further hearing are:

A. The Proposed Final Judgment does not, beyond March 1981, protect competition and the economic viability and continued independence of many of the producers who now exist among the 900 dairy farmers selling to Hood.

B. The Proposed Final Judgment does not protect competition and the economic viability and independence of the small milk marketing and bargaining cooperatives which now exist among those who serve Hood and its competitors.

C. The Proposed Final Judgment does not protect competition which now exists among the milk processors, handlers and plants competing with Hood.

D. The Proposed Final Judgment does not protect against future mergers or acquisitions of competing (or noncompeting) milk marketing and bargaining cooperatives by and into Agri-Mark. Such mergers and acquisitions will have the effect of eliminating producer competition, removing producer sources of fluid milk for processors competing with Hood, and extending Agri-Mark and Hood's market power.

E. The Proposed Final Judgment does not protect consumers from the effects of increased concentration in the New England-Northeast Areas, such as the unilateral ability of this giant marketing agency to unduly enhance retail prices which will result from areawide premiums made possible by this increased market power. Additionally, consumers will suffer from a loss of options to purchase a variety of products which will disappear from the market, with the loss of milk producers and processors. For these and other reasons the Proposed Final Judgment is not in the public interest.

Discussion

4. *Background.* NAMMR, a District of Columbia nonprofit-corporate-trade association, was organized approximately six years ago in an effort to seek equity in the marketing of milk for small processors through Federal legislative changes, departmental regulations and court proceedings. Members are primarily located in the East, South, and the Midwest, with a few in the Far West. Several of its members are directly affected by the acquisition and the terms of this final judgment as they are Northeastern competitors. However, the ultimate effects of this acquisition will go far beyond those immediately involved.

NAMMR and its members are vitally concerned with this matter. This acquisition is one more milestone on the road toward total domination of the nation's fluid milk supply by a few regional super cooperatives who are linked together with anticompetitive super pooling agreements. They use their milk marketing power to integrate forward acquiring processing plants and the dairy companies which were their former customers. When processors are faced with a single supplier after the elimination of their alternate suppliers, they are usually subjected to increased premiums unilaterally applied by the giant co-op above the Federally ordered prices for fluid milk. In seeking more favorable milk prices and an assured milk supply, independent processors begin traveling greater distances with resulting increased transportation costs. They are ultimately forced out of business. Their plants and equipment are not marketable on any reasonable value basis as any prospective purchaser (with the exception of the dominant co-op supplier) will find the same supply problem.

5. *Discussion.* The Department of Justice (DOJ) has filed various documents in compliance with 21 U.S.C. 16(b) and included is its Competitive Impact Statement filed 7/16/80 with this Court.

It is recited at page 3:

"The principal purpose of this lawsuit has been to preserve in New England the conditions necessary to insure that raw milk is sold to all dairies at the competitive price consistent with governmental regulation of milk prices."

There is no assurance that the purpose of this lawsuit will be realized by the Judgment. The Department of Justice recognizes that "Hood is the largest purchaser of milk from independent dairy farmers in New England," and "accounts for 14% of all raw milk purchases." (Page 3) Agri-Mark's members account for at least 35% of all milk production in the same area. These statistics alone exceed the Department of Justice guidelines for a merger between a supply firm of 10% or more of the sales in its market and a purchasing firm with 6% or more of the total market purchases. Thus the merger here was challenged by the Department of Justice and it admits in its Impact Statement that the combined Hood-Agri-Mark group will be dominant and "competitively dangerous." Agri-Mark has made it clear that it must expand its membership and gain a larger share of the supply market—up to and exceeding 50% of New England producers. The Department of Justice acknowledges the anticompetitive nature of the merger and NAMR finds ample reason to agree with that conclusion even if the terms of this proposed Judgment become effective. The following statement of the Department of Justice, in referring to what might have happened without this Proposed Judgment, is absolutely true, based upon experiences elsewhere in the country, and NAMMR submits, are likely to occur under the terms of the Judgment:

"Hood competitors who are fully or substantially supplied by Agri-Mark would be placed in the difficult position of being supplied by a company which controls their major competitor. *Vigorous competition on their part with Hood might tend to* jeopardize their milk supply." (Page 5)

Argument

6. The Proposed Judgment, according to Department of Justice, would "deprive Agri-Mark and Hood of the tools which might empower their combination to have undesirable effects in the marketplace." The Department then sets forth on Page 5 of the Impact Statement six measures of relief or provisions of the Judgment which will act as barriers agains anticompetitive conduct and its results.

7. "(1) Stripping Agri-Mark of any ability to sustain any artificial increase in prices."

According to the Department of Justice this is accomplished by Paragraph IV-A which will require Agri-Mark to charge Hood the same prices it charges other competing dairies, and in Paragraph IV-B from selectively lowering prices to destroy competition (Page 11). This resolution totally ignores the problem of premium pricing as Agri-Mark gains 50% and more of the supply market. It is now, and will become the sole supplier for small processors competing against Hood. Regardless of the prohibition against interlocking directors, Agri-Mark and Hood will be in effect almost a single entity. How can this Judgment guarantee a true supplier-customer relationship when the customer's capital stock is owned by the associated co-op, Agway, and all assets are

owned by the supplier. Are these "arms length" dealings? What are the payment terms of the long-term lease of the fixed assets of the old Hood Company, which the new Hood entity is leasing from Agri-Mark, its supplier? NAMMR asserts that there are no exacting provisions under this Judgment to prevent the flow of funds and price rebates between the co-op supplier and the operating subsidiary Hood Dairy. Agri-Mark is the major supplier now and will be soon the sole supplier of Hood. There are many other services, programs and arrangements between supplier-co-op and dairy customer that Agri-Mark will use to favor its Hood subsidiary over the independent processor. As Hood grows stronger the independent weakens, and areawide premiums will not be prevented by this Judgment.

8. "(2) preventing Agri-Mark from 'locking' members into the cooperative." (Page 5)

A major tool used by other regional milk co-ops is the long-term membership contract (See *U.S. v. Dairymen, Inc.*, 1979-1 Trade Cases 62,494; *U.S. v. Mid-America Dairymen, Inc.*, 1977-1 Trade Cases 61,509 (W.D. Mo. 1977); and *U.S.* v. *Associated Milk Producers, Inc.*, 394 F. Supp. 29 (W.D. Mo. 1975). This is addressed by the Department of Justice in this proposal. According to Paragraph V of the Judgment, the Department of Justice believes that Agri-Mark's board cannot discriminate in repayments of equity membership contributions and allocated retained earnings between its members so as to lock them in and prevent them from joining a competing co-op or going independent. Department of Justice concludes: "Thus, producers gain no advantage regarding the recovery of funds by remaining in Agri-Mark compared to competing with it." NAMMR submist that this provision does supply some of the democracy and ease of existing that is blatantly lacking in many agricultural co-ops but it, nevertheless, will not prevent Agri-Mark from simply returning no equity contributions nor retained earnings for a long period of time or from returning them on the basis of a long-term schedule. This money can be retained until the Agri-Mark—Hood deal is solidified; until Agri-Mark increases its number of producer members and milk volume to a market dominating level; and until there are few competing co-ops and processors remaining so that a leaving producer has nowhere to go with his money, but out of business.

9. "(3) providing independent producers who had delivered to Hood in the past additional time in which to find markets for their milk other than Agri-Mark."

NAMMR argues here that Paragraph VI-C will be of no use after March 1, 1981. The anticompetitive effects of this acquisition will not be reduced at that time and we see no new markets developing for those non-Agri-Mark dairy farmers who must either join or go out of business. Since there are pickup routes for bulk fluid milk haulers, what happens to one former Hood producer who declines to join Agri-Mark and finds himself on a route with all Agri-Mark members? Although it is possible that alternative marketing may be developed for the independent farmers between February 1980 and March 1, 1981, it is doubtful. Can some of the 900 independent dairy farmers join or form competing cooperatives, and if so, how or to whom will they market their milk? It is imperative that this Final Judgment be delayed until a hearing can determine what effect this paragraph has had on the supply market.

10. "(4) forbidding Agri-Mark and Hood from entering supply agreements with a duration of more than one year."

NAMMR has concern with the future effectiveness of this proposal. Although such a provision as contained in Paragraph VI-A would prohibit the totally anticompetitive 10-year full supply contract with options, what is the anticipated effect of renewable one year contracts? At Page 3 of the Impact Statement, the Department of Justice concludes:

"The effect of this full supply contract would be to foreclose Agri-Mark's competitiors—independent dairy farmers and members of competing cooperative organizations—from competing with Agri-Mark for sales of raw milk to Hood for the next 20 years."

Has the Department of Justice made available to the court any evidence to demonstrate that at the renewal dates of the annual supply (full supply?) contracts "independent dairy farmers and members of competing cooperative organizations" will be in a position to offer competitive bids? What is the basis for believing they will be seriously considered by Hood? Does it appear possible that the Hood board and management will be able to exercise independent judgment and contract for some lower cost milk from independent producers, or to purchase from a competing cooperative, in order not to be dependent on a single supplier, Agri-Mark? Will Agri-Mark be in a position to require membership payments or in lieu thereof surcharge payments per cwt of fluid milk to Agri-Mark as a condition of selling to Hood by independents? This latter practice has been reported in Florida after the acquistion of Farmbest Foods. (The entire matter currently before the Federal Trade Commission; *In the Matter of Dairymen, Inc. and Munford, Inc.*, Dkt. D 9143).

11. NAMMR submits that these questions require thorough answers and these answers can only be developed through a full hearing on the Consent Judgment. One of the important charges in the complaint is the Section 3, Clayton Act violation alleged in Paragraphs 27 and 28. NAMMR believes that Paragraph VI-A of the Proposed Judgment is a positive step but it does not protect against the apparent injury of lessened competition and the tendency toward monopoly as described in Paragraph 28. This merger or acquistion between the largest producer co-op and the largest dairy processor, that is, the supplier buying up the customer, is the greater evil than if Hood had made horizontal acquistions or mergers which would violate the F.T.C. and D.O.J. Dairy Industry (and) Merger Guildelines. The Department is aware of the consequences of this type of acquistion from its litigation experiences with the three other super, regional co-ops mentioned in Paragraph 8 above.

12. "(5) isolating Hood and Agri-Mark from each other in certain significant respects."

The problem with evaluating the future effectiveness of this proposal is obviously whether there can be any true isolation of their management. NAMMR submits that there will be no *de facto* isolation or separation under the constraints of Paragraph IX which would enjoin and restrain Hood and Agri-Mark from having: Any common director; any common officer or management; and from discussing prices or terms and conditions of sale of milk, except for sales between each other. The Department of Justice concludes that since "Agri-Mark will not own Hood, but only its assets;" and "Agway will own all of Hood's stock and thus be able to elect Hood's management—the Proposed Final Judgment assures that Agri-Mark and Hood will remain separately controlled." This conclusion is unrealistic and does not seem to be based upon the functional connections between the three entities. The Impact Statement does not reveal the relationship of Agway and Agri-Mark. In Paragraph 6 of the complaint it is recited that 60% of Agway's *member* sales are to dairy farmers. Is it correctly assumed that 60% of Agway's members are dairy farmers? Whatever the percentage of membership, NAMMR suggests that Agway is substantially owned by Agri-Mark's members. There appears to be significant common ownership. Since Agway will own all of Hood's stock, it is presumed that Agway's board will vote in the Hood board and thus select its management and determine its policies. Agri-Mark will own all of the fixed assets of Hood and, thus, be in a position of exercising considerable influence. It is assumed that Agri-Mark will ship milk to Hood on credit terms with some security arrangement which means additional elements of control. What consideration has D.O.J. given to the effects of the other agreements between Agri-Mark and Hood listed in paragraph 24 of the Complaint: An administrative services agreement; a marketing agreement; and a loan agreement? NAMMR cannot visualize independent decisions by Hood management concerning sources of supply, milk costs and wholesale and retail pricing and terms.

Conclusion

13. Based upon the record (which is insufficient), the Department of Justice must realize that this Proposed Final Judgment does not resolve the serious allegations of competitive injury and detrimental consequences for the public which were raised in the Complaint. The Complaint correctly characterized the injury flowing from the lessened competition which will result from the acquistion. Therefore, NAMMR requests the Department of Justice to withdraw its Consent as soon as possible under the law and the terms of this agreement, and to proceed to trial to gain the full measure of relief, which must be not less than total divestiture of H. L. Hood, Inc. and its restoration to its prior condition and position as "New England's largest dairy."

14. In the alternative the Department of Justice should request a reasonable delay and hearings before the Court on the effects of the Proposed Judgment. The requested hearings would demonstrate the fatal flaws in the Consent Judgment.

It is further requested that preceding the date of the hearing, at least 30 days in advance, the Department of Justice, with the approval of the Court, give actual written notice to all affected parties, and to an adequate number of the 900 independent producers and the 98 competitive processors of H. P. Hood, of the hearing date, the purpose of the hearing and the opportunity to offer evidence of any injury to competition, by orderly presentation directly with the Court.

NAMMR further requests that it receive notice of the hearing and that the Department of Justice not oppose NAMMR's motion to the Court to file a brief, and if permitted, to appear as Amicus Curiae, in these hearings upon leave granted by the Court.

Dated: September 26, 1980.

Respectfully Submitted,

Donald A. Randall,

Counsel,

Harry G. Shupe,

Assistant Counsel, National Association for Milk Marketing Reform.

National Independent Dairies Association,

September 30, 1980.

Re *United States v. Agri-Mark, et al* CA 80-174, USDC Vt.

Alan L. Marx, Esquire,

Assistant Chief, General Litigation Section, Anti-trust Division, Department of Justice, Washington, D.C. 20530.

Dear Mr. Marx: This letter is submitted concerning the proposed consent decree in the subject case, in accordance with 15USC16(b).

National Independent Dairies Association (NIDA) since 1957 has had as its members independently owned dairy processors throughout the nation, including the New England States. Our New England members are deeply concerned about the potential effect of the proposed consent decree to lessen competition in the New England milk market place. NIDA joins in their concern and further notes with concern this latest attempted step in the continuing march of the huge and economically powerful agricultural cooperatives to gain shared monopoly control of important food markets, contrary to the interests of private enterprise and of the consumer public. Let there be no blinking the fact that this attempted merger involves ruthless Fortune 500 economic power and the proposed merger is a blatant attempt to increase that power in New England.

It is also noteworthy that this is the first instance of penetration into the milk processing industry of a Fortune 500 *supply* cooperative. Accordingly, this is not a combination favor by the Congress under the Capper-Volstead exemption. The proposed merger would create an economic monster which would place the independent New England dairy farmers and dairy processors, like the ham and cheese in a sandwich, between a controlled fluid milk supply structure and a related dominant processing competitor. Such a resulting integration bodes ill for all independents now and renders any new market entry into dairy processing in New England foolhardy indeed.

There is no economic necessity for regional producer co-operatives to engage in large scale processing operations. Associated Milk Producers, Inc. (AMPI) in the southwestern states has gone from owning 12 bottlers in the past to two, and one of those is for sale. In a recent speech at a dairy conference, Mr. Ira Rutherford, AMPI General Manager, pointed out that co-operative processing has proven to not always be the most efficient way to work in the interest of the farmers and AMPI does not want to compete with processing dairies. NIDA agrees with this view.

Attached is a copy of a lead article which puts the antiprivate enterprise and predatory activities of the huge regional agricultural co-operatives in perspective in the national agribusiness market. The position of the milk co-operatives in this ranking of the largest is noteworthy, as also is Ag-Way's position. It is further interesting to note that Ag-Way's sales have increased to over $2 billion (1979 Annual Report) from $1.3 billion in 1977. It is clear that Ag-Way is an ever-growing, formidable economic power, as is Yankee Milk, the dominant dairy marketing co-operative in New England, now proposed as Agri-Mark. Their alliance in this merger to take over H.P. Hood is a clear threat to further milk production and processing competition in New England despite the apparent concessions in the proposed consent decree. NIDA objects to the acceptance of the proposed consent decree in its present form. It is believed to be in the public interest, locally in New England and nationally, to proceed to trial on the *prima facie* case the Department of Justice can prove and a granting of the Prayers in the Complaint.

NIDA has an additional concern about a consent decree in this case. With all due respect to the Department of Justice, the fact is that the track record of the Antitrust Division in prior years does not inspire confidence in future vigorous enforcement of consent decree orders in dairy cases. See *United States v. Mid America Dairymen, Inc.* 1977-1 Trade Cases ¶61,509. Not only has Mid-America not divested itself of the three cheese plants as ordered, it subsequently acquired Highland Dairy in Springfield, Missouri, a major independent processor, and Roberts Dairy, a major independent processor, in Omaha, Nebraska within the 5 year period. Mid-America today is a stronger monopolistic power than it was before the consent decree in that case.

Should the Court favor a consent decree, the proposed decree should be modified to protect the competition among the processors in New England. Nationally, there has been a frequent pattern of ultimate price discrimination and sales below cost by the large processing activities taken over by producer co-operatives. Stated another way, co-operatives in many instances have used their acquired large processing facilities to lessen competition by dairy product price warfare supported by their milk production activities, which enjoy limited antitrust exemption and special income tax treatment, and by their ability to recoup any resultant losses throught price premiums on fluid milk paid by, among others, the very independent processors targeted by the co-operative processing and sales activities. The defendants should not be allowed to so operate H. P. Hood to lessen competition and tend to create a monopoly in New England. At the very least, the proposed consent decree should enjoin the defendants from conducting H. P. Hood's sales of fluid milk products so as to lessen competition by discriminatory pricing practices in violation of the Robinson-Patman Act (15 U.S.C. 13) and by sales below cost in violation of Section 3 of the Robinson-Patman Act and applicable state sales below cost laws; and "cost" in this instance should include all those cost elements now attributable to H. P. Hood's milk products operations as an independent company, not overall co-operative costs.

In conclusion, NIDA urged the filing of this action by letter to Assistant Attorney General Litvack and in conference with Mr. Litvack by NIDA's Executive Vice President, Arthur H. Berndtson. We are gratified that the Department of Justice ultimately did file the action. We believe the public interest will best be served by a trial and the granting of the Prayers set forth in the Complaint. Failing a trial, we urge that any consent decree approved by the Court include a provision enjoining the defendants from discriminatory pricing of H. P. Hood's milk product sales in violation of the Robinson-Patman Act (15 U.S.C. 13) and from sales below cost in violation of Section 3 of the Robinson-Patman Act and applicable State sales below cost laws, with a clear definition of "cost" in this instance.

Very truly yours

R. M. Hanckel, *President.*

State of Vermont, Office of the Attorney General,

Montpelier, Vt., August 21, 1980.

Re *United States v. Agri-Mark, Inc., et al.* District of Vermont Civil Action No. 80-174.

Mr. Alan L. Marx,

Assistant Chief, General Litigation Section, Department of Justice, Washington, D.C.

Dear Mr. Marx: This office has reviewed the Final Judgment in the above-captioned case filed on July 16, 1980 as well as the Competitive Impact Statement filed the same day. We are submitting the following comments pursuant to Paragraph V of the Competitive Impact Statement, Procedures Available for Modification and urge that the proposed Final Judgment *not* be entered in its present form.

As you probably know, the dairy industry is tremendously important to the State of Vermont. Nearly 3,400 farmers earn their living from their dairy cows. The contribution of dairy farming to Vermont's economy is great, indeed.

The period from the announcement of the proposed creation of Agri-Mark and the proposed acquisition of a majority of H. P. Hood stock by Agway, Inc. until the proposals were consummated following the settlement of the case brought by the Justice Department was one of intense efforts to convince farmers to sign one year supply contracts with Agri-Mark. In addition to signing the supply contracts, farmers who wished to join Agri-Mark had to agree to pay Agri-Mark a membership contribution equal to $.94 per hundredweight of raw milk the

farmer produced in 1979. Many farmers, as the Competitive Impact Statement noted at 4–5, were faced with the problem of deciding whether to join Agri-Mark or find a new market for their milk during the flush season, when milk production is highest, relative to demand. Now that the farmers have had more time to reflect on their decision, some may wish to change their minds.

It is not only the Hood independents who may wish to reconsider their decision to join Agri-Mark. Other independents and members of co-operatives who signed contracts with Agri-Mark may have been in situations similar to those of the Hood independents (see letter of Gilbert T. Normand, Esq., August 14, 1980). We recommend that the protections given the Hood independents in paragraphs VI C and VII of the Final Judgment be extended to all producers. We understand that the Department proposed just such a provision as part of the settlement of this action on July 3, 1980. We also understand Agri-Mark's concern about its ability to accurately forecast its revenue. However, we believe that the number of farmers who would exercise an option to leave Agri-Mark would be quite small relative to the overall size of Agri-Mark. Of the nearly 3,400 dairy farmers in Vermont, almost 800 belonged to Yankee Milk, Inc. before the creation of Agri-Mark. The members of Yankee Milk voted overwhelmingly to join Agri-Mark and make up a majority of the members of Agri-Mark. We estimate that less than 200 dairy farmers in Vermont would be included in a class of Vermont farmers who joined Agri-Mark and were neither members of Yankee Milk or Hood independents. This group would probably be similar in number to the Hood independents who fall within the protections of paragraphs VI C and VII of the Final Judgment. We have no way of knowing how many of that group would wish to leave Agri-Mark if given the chance, but we do not think it would be very large.

In view of the total number of Agri-Mark members, we do not think it would cause Agri-Mark an undue burden to offer such a group the option of leaving. However, we think that the option should be exercised within a reasonably short time after notice is given so that Agri-Mark would be able to accurately revise its revenue projections promptly.

Because of the very substantial impact on a dairy farmer who joined Agri-Mark and might wish to reconsider his decision but cannot, we urge the Department to reconsider the proposed Final Judgment and extend the protections given the Hood independents in paragraphs VI C and VII to all producers.

Sincerely,

M. Jerome Diamond,

Attorney General.

Glenn A. Jarrett.

Assistant Attorney General Antitrust Division.

Gilbert T. Normand,

Montpelier, Vermont 05602, August 14, 1980.

Re United States of America v. Agri-Mark, Inc., Agway, Inc., and H. P. Hood, Inc. United States District Court for the District of Vermont Docket No. 80–174.

Mr. Alan L. Marx,

Assistant Chief, General Litigation Section, Department of Justice, Washington, D.C.

Dear Mr. Marx: Please be advised that I represent the interest of Northern Farms Cooperative, Inc. (NFC), a Vermont cooperative, whose business office is located in Montpelier, Vermont.

Consistent with paragraph V—*Procedures Available for Modification* of the *Competitive Impact Statement*, filed on July 16, 1980 in the above entitled matter with the United States District Court for the District of Vermont, the following comments are supplied herewith, urging that the proposed Final Judgment is said matter not be entered in the form proposed.

1. That NFC has been an active Vermont cooperative since 1939 with a present producer membership of approximately 650.

2. That prior to and during the instant proceedings approximately 389 NFC members, through NFC, used H. P. Hood, Inc. as their milk market.

3. That NFC believes that NFC members whose product was shipped to Hood, and other members who came to hear about Agri-Mark were sought to join Agri-Mark in the same or similar manner as the so-called Hood independents, as defined in the proposed Final Judgment at paragraph 1–D.

4. That NFC believes that the aforementioned NFC members faced the same concerns, questions and apprehensions as the Hood independents as to a future market for their milk.

5. That NFC believes that between 150–200 of its members had signed Agri-Mark membership agreements prior to the filing of the instant proceedings.

6. That paragraph VII of the proposed Final Judgment would allow, within guidelines set out therein, Hood independents to terminate agreements between Agri-Mark and that producer.

7. That in many of the areas of the State of Vermont, Hood independents and cooperative members were under the same pressures to find alternative markets for their milk when they became aware of the Agri-Mark formation.

8. That NFC members who signed Agri-Mark agreements undr the same or similar circumstances as the Hood independents are precluded in the proposed Final Judgment from the same right as Hood independents to reassess their particular situation as whether to join Agri-Mark or not.

9. That NFC has certain of its members who had previously signed Agri-Mark membership agreements who, as this matter has developed, reassessed their situation and would wish to terminate their Agri-Mark agreement consistent with paragraph VII of the proposed Final Judgment.

10. That paragraph VI, *Alternatives Actually Considered*, of the *Competitive Impact Statement* indicates that on July 3, 1980 the plaintiff (Uunited States of America) "proposed that as part of the settlement of this action, Agri-Mark be enjoined for 45 days from entry of Final Judgment from refusing to allow any *producer* (emphasis added) to terminate his or her Agri-Mark membership agreement if that producer gave written notice to Agri-Mark of his or her desire to terminate such agreement within the 45 day period."

11. That paragraph VI of said *Competitive Impact Statement* also indicates and implies that the major reason the proposed Final Judgment would allow only Hood independents to terminate previously signed Agri-Mark membership agreements is to allow Agri-Mark to finance its organization by projecting members' equity contributions with some degree of certainty.

12. That the former Yankee Milk cooperative is/was the largest cooperative in New England. Said cooperative voted overwhelmingly to join Agri-Mark. The past membership of Yankee Milk makes up the vast majority of Agri-Mark.

13. That NFC is a bargaining and not a marketing cooperative.

14. That NFC believes that Agri-Mark (formerly Yankee Milk) is the largest cooperative supplier of milk to Hood at the present time.

15. That the number of NFC members who signed Agri-Mark membership agreements and the number who would possibly terminate said agreements, if allowed in a Final Judgment, would have little impact on the concerns of Agri-Mark as set out in the aforementioned paragraph VI of the *Competitive Impact Statement.*

16. That the impact on a NFC producer not afforded the same opportunity to terminate an Agri-Mark membership agreement as allowed Hood independents in the proposed Final Judgment could be substantial.

17. That the potential impact on NFC and its haulers for the fracturing of milk routes due to lost members could be substantial to the point of driving some haulers out of business to the detriment of other Vermont producers.

18. That any potential loss to the defendants in this action would be minimum in allowing concerned NFC members, who previously signed Agri-Mark membership agreements, from having the right to terminate that agreement under the same terms as Hood independents.

19. That prior to the filing of the *Competitive Impact Statement*, Stipulation and proposed Final Judgment in this action on July 16, 1980, Vermont State Senator Francis Howrigan (D–Franklin) was subpoenaed to testify in then pending proceedings.

20. That Senator Howrigan is a NFC producer/member who is also on the Board of Directors of NFC.

21. That Mr. Howrigan was prepared to testify, among other matters, as to the impact that he believed Agri-Mark would have in the Northern Vermont Market area, the impact upon haulers and the concerns of producers, including NFC members, who had previously signed Agri-Mark membership agreements.

22. That Mr. Howrigan was not called to so testify.

23. That shortly after July 16, 1980 NFC was informed that the proposed Final Judgment was filed with the Court.

24. That NFC requests that paragraph VII of the proposed Final Judgment be amended to allow any NFC member, who signed an Agri-Mark membership agreement, the opportunity to terminate said agreement

consistent with the right presently proposed to Hood independents.

Very truly yours,

Gilbert T. Normand.

cc: Northern Farms Cooperative, Inc., M. Jerome Diamond, Attorney General.

[FR Doc. 80-36962 Filed 11-26-80; 8:45 am]

BILLING CODE 4410-01-M

Drug Enforcement Administration

Importation of Controlled Substances; Application

Pursuant to Section 1008 of the Controlled Substances Import and Export Act (21 U.S.C. 958(h)), the Attorney General shall, prior to issuing a registration under this section to a bulk manufacturer of a controlled substance in schedule I or II and prior to issuing a regulation under section 1002(a) authorizing the importation of such a substance, provide manufacturers holding registrations for the bulk manufacture of the substance an opportunity for a hearing.

Therefore in accordance with § 1311.42 of Title 21, Code of Federal Regulations (CFR), notice is hereby given that on July 2, 1980, Philadelphia Seed Company, Division of Stanford Seed Company, Muddy Creek Road, Lancaster County, Denver, PA 17517, made application to the Drug Enforcement Administration to be registered as an importer of marihuana, a basic class controlled substance in schedule I. The applicant will render marihuana seeds sterile for use as feed for certain types of animals. The end product will not be in an abusable form.

As to the basic class of controlled substance listed above for which application for registration has been made, any other applicant therefor, and any existing bulk manufacturer registered therefor, may file written comments on or objections to the issuance of such registration and may, at the same time, file a written request for a hearing on such application in accordance with 21 CFR 1301.54 in such form as prescribed by 21 CFR 1316.47.

Any such comments, objections or requests for a hearing may be addressed to the Administrator, Drug Enforcement Administration, United States Department of Justice, 1405 I Street, NW., Washington, D.C. 20537, Attention: DEA Federal Register Representative (Room 1203), and must be filed no later than December 29, 1980.

This procedure is to be conducted simultaneously with and independent of the procedures described in 21 CFR 1311.42 (b), (c), (d), (e) and (f). As noted in a previous notice at 40 FR 43745–46 (September 23, 1975), all applicants for registration to import a basic class of any controlled substance in schedule I or II are and will continue to be required to demonstrate to the Administrator of the Drug Enforcement Administration that the requirements for such registration pursuant to 21 U.S.C. 958(a), 21 U.S.C. 823(a), and 21 CFR 1311.42 (a), (b), (c), (e) and (f) are satisifed.

Dated: November 24, 1980.

Peter B. Bensinger,

Administrator, Drug Enforcement Administration.

[FR Doc. 80-37088 Filed 11-26-80; 8:45 am]

BILLING CODE 4410-09-M

Importer of Controlled Substances; Registration

By Notice dated August 25, 1980, and published in the Federal Register on August 29, 1980 (45 FR 57790), Carlton Turner, Dept. of Pharmacognosy, School of Pharmacy, University of Mississippi, University MS 38677, made application to the Drug Envorcement Administration to be registered as an importer of Marihuana, a basic class of controlled substance listed in schedule I.

No comments or objections have been received. Therefore purusant to Section 1008(a) of the Controlled Substances Import and Export Act and in accordance with Title 21 Code of Federal Regulations § 1311.42, the above firm is granted registration as an importer of the basic class of controlled substance listed above.

Dated: November 24, 1980.

Peter B. Bensinger,

Administrator, Drug Enforcement Administration.

[FR Doc. 80-37089 Filed 11-26-80; 8:45 am]

BILLING CODE 4410-09-M

Manufacture of Controlled Substances; Registration

By Notice dated August 25, 1980, and published in the Federal Register on August 29, 1980 (45 FR 57789), Cyclo Chemical Division, Division of Alameda Laboratories, Inc., 1922 East 64th Street, Los Angeles, California 90001, made application to the Drug Enforcement Administration to be registered as a bulk manufacturer of Diphenoxylate, a basic class of controlled substance listed in schedule II.

No comments or objections having been received, and pursuant to Section 303 of the Comprehensive Drug Abuse Prevention and Control Act of 1970 and Title 21, Code of Federal Regulations § 1301.54(e) the Administrator hereby orders that the application submitted by the above firm for registration as a bulk manufacturer of the basic class of controlled substance listed above is granted.

Dated: November 24, 1980.

Peter B. Bensinger,

Administrator, Drug Enforcement Administration.

[FR Doc. 80-37086 Filed 11-26-80; 8:45 am]

BILLING CODE 4410-09-M

Manufacture of Controlled Substances; Registration

By Notice dated September 23, 1980, and published in the Federal Register, on September 30, 1980; (45 FR 64761), Pharmaceutical Division, Ciba Geigy Corp., 556 Morris Avenue, Summit, New Jersey 07901, made application to the Drug Enforcement Administration to be registered as a bulk manufacturer of Methylphenidate, a basic class of controlled substance listed in schedule II.

No comments or objections having been received, and pursuant to Section 303 of the Comprehensive Drug Abuse Prevention and Control Act of 1970 and Title 21, Code of Federal Regulations § 1301.54(e), the Administrator hereby orders that the application submitted by the above firm for registration as a bulk manufacturer of the basic class of controlled substance listed above is granted.

Dated: November 24, 1980.

Peter B. Bensinger,

Administrator, Drug Enforcement Administration.

[FR Doc. 80-37087 Filed 11-26-80; 8:45 am]

BILLING CODE 4410-09-M

Federal Bureau of Investigation

National Crime Information Center Advisory Policy Board; Renewal

In accordance with the provisions of the Federal Advisory Committee Act [U.S.C. App. I (Supp. II, 1972)], and the Office of Management and Budget (OMB) Circular A–63, the Director, FBI, has determined that the renewal of the National Crime Information Center (NCIC) Advisory Policy Board is in the public interest in connection with the performance of duties imposed upon the FBI by law.

The Board recommends to the Director, FBI, general policy with respect to the philosophy, concept, and operational principles of the NCIC, particularly the system's relationship with local and state criminal justice systems.

The Board consists of twenty-six members of which twenty are elected

from state and local criminal justice representatives and the remaining six appointed by the Director, FBI. The six appointed members consist of two members each from the judicial, prosecutorial, and correctional segments of the criminal justice community.

The Board functions solely as an advisory body in compliance with the provisions of the Federal Advisory Committee Act. Its charter will be filed under the Act fifteen days from the date of the publication of this notice.

Interested persons are invited to submit comments regarding the renewal of the NCIC Advisory Policy Board to Mr. David F. Nemecek, Committee Management Liaison Officer, Federal Bureau of Investigation, National Crime Information Center, Washington, D.C. 20535, telephone number 202-324-2606.

Dated: November 25, 1980.

William H. Webster,

Director.

[FR Doc. 80-37128 Filed 11-26-80; 8:45 am]

BILLING CODE 4410-02-M

LIBRARY OF CONGRESS

Copyright Office

[Docket LPR 80-5]

Report of the Register of Copyrights on the Effects of 17 U.S.C. 108 on the Rights of Creators and the Needs of Users of Works Reproduced by Certain Libraries and Archives; Public Hearing

AGENCY: Library of Congress, Copyright Office.

ACTION: Notice of public hearing.

SUMMARY: The Copyright Office of the Library of Congress is preparing a report for Congress in accordance with 17 U.S.C. 108(i). The subject of the report is the extent to which 17 U.S.C. 108 has achieved the intended balance between the rights of creators and the needs of users of copyrighted works which are reproduced by certain libraries and archieves. This notice announces and invites participation in the fifth and, under present plans, the last of a series of regional public hearings designed to elicit views, comments, and information from all interested persons, including copyright proprietors, libraries, and users of all types of libraries. The Copyright Office actively seeks the participation not only of organizational representatives, but also of any individual whose informed opinion may contribute to the preparation of the report and the possible recommendation of changes in the copyright law.

DATES: The hearing will be held on January 28, 1981 and, if necessary, on January 29, 1981 as well, at the New York Hilton, 53d Street and Avenue of the Americas, New York City, in Room B of the Gramercy Suite, beginning at 9:30 a.m.

The hearing will take place during the same week as the annual meeting of the American Physical Society.

Anyone desiring to testify should submit a written request to present testimony by January 19, 1981 to the address set forth below. To assist the Copyright Office in scheduling witnesses and in deciding whether a second hearing day will be needed, we urge the public scrupulously to observe the date for requesting time to testify, even if written statements are submitted later. Ten copies of written statements must be received by the Copyright Office by 4:00 p.m. on January 21, 1981.

Supplemental statements will be entered into the record until March 1, 1981. Ten copies of such statements should be submitted.

ADDRESSES: Written requests to present testimony and ten copies of written statements or of supplementary statements should be submitted as follows:

If sent by mail: Office of the General Counsel, U.S. Copyright Office, Library of Congress, Department DS, Washington, D.C. 20540.

If delivered by hand, the copies should be brought to: Office of the General Counsel, Madison Building, Room 407, First and Independence Ave. SE., Washington, D.C.

All requests to testify should clearly identify the individual or group desiring to testify and the amount of time desired. The Copyright Office will try to contact all witnesses to confirm the times of their appearances.

FOR FURTHER INFORMATION CONTACT: Dorothy Schrader, General Counsel, Copyright Office, Library of Congress, Washington, D.C. 20540; Telephone: (202) 287-8380.

SUPPLMENTARY INFORMATION:

1. Background and Purpose of the Report

The Copyright Act of 1976, 17 U.S.C. 101 et seq., was a product of many years of effort by Congress to replace what many felt was a copyright law which was ill-suited to such technological developments of the twentieth century as cable television, computers, and photocopying machines. One of the most difficult problems to resolve concerned the photomechanical reproduction, in whole or in part, of copyrighted works by libraries and archives. In addition to codifying the doctrine of fair use for the first time (17 U.S.C. 107), the Copyright Act of 1976 contains provisions authorizing certain acts of reproduction and distribution by qualifying libraries (17 U.S.C. 108).

These provisions represent a balance between the positions forcefully advocated by the proprietor and user communities in testimony before Congress during the legislative effort that resulted in the current Act. Because of the uncertainty about their effect, at present and in the future, Congress provided that the Register of Copyrights should prepare at five-year intervals, reports concerning the effectiveness of the balance created by the Copyright Act. The first such report, the subject of the hearing here announced, is due January 1, 1983. An advisory committee composed of ten representatives of concerned interests meet regularly with the Copyright Office to plan the preparation of the report. In addition to public hearings, the Copyright Office has under consideration the possibility of conducting an empirical survey to provide objective data on the effects of section 108.

The purpose of this hearing is to examine practices under section 108 as they have developed since January 1, 1978, when the Copyright Act of 1976 became effective. It would therefore be most helpful if witnesses not simply reiterate positions previously taken with respect to library copying, but amplify their remarks with a discussion of ways in which the Act has or, of equal importance, has not affected their practices.

2. Summary of Section 108

Under section 106 of the Copyright Act of 1976, authors and other owners of copyright are given the exclusive rights, among others, to reproduce the copyrighted work in copies or phonorecords and to distribute copies or phonorecords of the copyrighted work to the public. These exclusive rights are subject to several exemptions, including those contained in section 107 ("fair use") and section 108 ("reproduction by libraries and archives").

Section 108 deals with a variety of situations involving photocopying and other forms of reproduction by libraries and archives. Subsection (a) provides that "* * * it is not an infringement of copyright for a library or archives, or any of its employees acting within the scope of their employment, to reproduce no more than one copy or phonorecord of a work, or to distribute such a copy or phonorecord, under the conditions specified by this section if—

(1) The reproduction or distribution is made without any purpose of direct or indirect commercial advantage;

(2) The collections of the library or archives are open to the public or specialized researchers; and

(3) The reproduced or distributed material includes a notice of copyright.

Thus, paragraph (a) of section 108 establishes the basic conditions under which a library or archives may claim an exemption from the exclusive rights of copyright proprietors. In addition, for the library activity to be exempt under section 108, one of the other conditions set forth in paragraphs (b) through (f) must be satisfied. Moreover, under paragraph (h), the exemptions for nonprint copyrighted works are modified substantially. Very generally, with the exception of facsimile duplication for preservation purposes and to replace damaged, deteriorating, or lost copies, the exemptions of section 108 apply primarily to books and periodicals.

Archival preservation (section 108(b)). this exemption applies only to unpublished works in the current collection of a library or archives. It allows reproduction only in facsimile form, and only for "purposes of preservation or security or for deposit for research use in another library or archives."

Replacement (section 108(c)). Libraries or archives are authorized to duplicate a published work in facsimile form solely for the purpose of replacement of a copy or phonorecord that is damaged, deteriorating, lost or stolen *but* only if they find that an unused replacement copy cannot be obtained at a fair price. The legislative reports offer some guidance as to what is meant—they indicate that a reasonable investigation will always require recourse to commonly known trade sources in the United States, and in the normal situation also to the publisher or copyright owner or an authorized reproducing service.

Journal articles, small excerpts, etc. (section 108(d)). This paragraph applies to "no more than one article or other contribution to a copyrighted collection or periodical issue, or to * * * a small part of any other copyrighted work." The only conditions for supplying a reproduction are that: "the copy becomes the property of the user"; there is no reason to suppose that it "would be used for any purposes other than private study, scholarship, or research"; and the library or archives must display prominently, at the place where orders are accepted, and include on the order form, a warning of copyright in language prescribed by a Copyright Office regulation.

Entire works or substantial parts (section 108(e)). With one addition, the conditions applicable under paragraph (d), as discussed above, apply under paragraph (e) to the "entire work," or "a substantial part of it." The added condition is that "the library or archives has first determined, on the basis of a reasonable investigation, that a copy or phonorecord of a copyrighted work cannot be obtained at a fair price." This paragaph applies essentially to out-of-print works.

General exemptions (section 108(f)). In addition to the specific exemptions described above, paragraph (f) makes clear that no copyright liability attaches to a library or its employees for copying done on unsupervised copying machines provided the machines bear a warning that certain copying activity may represent an infringement of the copyright law. Also, nothing in section 108 "in any way affects the right of fair use as provided by section 107," and a small number of copies of an audiovisual news program may be made and distributed by lending.

Multiple and systematic copying (section 108(g)). Section 108 does not permit copying when the library or archives, or its employee—

(1) Is aware or has substantial reason to believe that it is making or distributing multiple copies of the same material, whether on one or several occasions, or

(2) Engages in the systematic reproduction or distribution of copies of periodical articles or excerpts from other copyrighted works; however, certain copying for interlibrary loan purposes is permissible, even if it might otherwise appear "systematic."

Copying for interlibrary loan purposes is authorized to the extent that libraries receiving copies so made do not do so "in such aggregate quantities as to substitute for a subscription to or purchase of such work." Guidelines for interpretation of the language "such aggregate quantities * * *" were adopted by Congress during its enactment of the Copyright Act, and their effectiveness is a subject of this hearing. They, as the Act, represent a compromise between proprietary and user interests. Because they were drafted by the interested parties with the administrative support of the National Commission on New Technological Uses of Copyrighted Works (CONTU), they have come to be known as the "CONTU Guidelines." (CONTU was a temporary commission which examined certain copyright issues related to computers and photocopying in order to permit Congress to proceed with its revision of the copyright law in general.)

The guidelines which were adopted provide, essentially, that copying for interlibrary loans is permissible—

(1) If no more than five requests for copies of periodical articles from any given periodical are filled for a requesting library during a calendar year, with respect to articles less than five years old. (There is no provision covering the copying of older articles);

(2) If no more than five requests for copies of excerpts of any given work are filled for a requesting library within a calendar year; and

(3) If requesting libraries state that their requests comply with the Act and keep records of their requests for three years.

3. Copyright Clearance Center

In an attempt to establish a centralized mechanism to facilitate payment of royalty fees for copying activities not exempt under the Copyright Act, publishers, with planning assistance by authors and librarians, established the Copyright Clearance Center, Inc. The Center, which is a not-for-profit organization, does not provide copies or grant permission to copy. Each publisher sets its own article copying fees and, to the extent feasible, publishes an article-fee code on the first page of articles to inform users of the appropriate charges for copying.

Participating libraries register with the Center and obtain a user-registration number for use in reporting copying. They submit periodic reports of copying activities and pay the applicable royalty fees on the basis of their chosen payment method, including deposit accounts, billing, and possible prepayment through a stamping meter or stamp.

Presently, this clearance system operates with respect to works in journals, magazines, newsletters, proceedings, symposia, and similar works. Its operating costs are borne by participating publishers.

4. Specific Questions

The Copyright Office is interested in receiving comments and testimony about any issues relevant to section 108 which concern copyright owners, librarians, and their patrons. Of particular interest are answers to the following questions:

1. To what extent has section 108 changed library procedures? Has there been any significant effect on users' and librarians' access to information?

2. To what extent has section 108 affected established patterns in the publishing

industry and the relationship between authors, libraries, and library users?

3. Depending upon the type of library involved, describe the effect, if any, of section 108 upon the type and amount of copying performed by the library on its own behalf or on behalf of users. To what extent have publishers and authors experienced a change in the number of requests from libraries to reproduce works since the present law went into effect?

4. In what manner has the establishment of the Copyright Clearance Center affected your experience under section 108? Would the creation of a National Periodical Center affect your operations? (The intent of these questions is to elicit responses from publishers and authors on the one hand and libraries and library users on the other.)

5. Describe the impact, if any, that section 108 has had upon the replication of nonprint materials, including the ability of libraries to reproduce phonorecords and audio visual works dealing with news. In response to this question describe any problems which have been encountered as the result of the narrower exemptions for nonprint materials under section 108.

6. How have the CONTU guidelines worked in practice? How should periodicals more than five years old be treated?

7. What is your opinion of the relationship between section 107 ("fair use") and section 108 ("reproduction by libraries and archives")?

8. How should foreign copyrighted works and requests from foreign libraries be treated under section 108 and, in practice, how are they treated now?

9. If problems do exist, can they be resolved without resort to legislative amendment? If so, what are the problems, and how could they best be resolved? If not, what changes should be made in the law?

(17 U.S.C. 108)

Dated: November 17, 1980.

David Ladd,

Register of Copyrights.

Approved:

Daniel J. Boorstin,

The Librarian of Congress.

[FR Doc. 80-37056 Filed 11-26-80; 8:45 am]

BILLING CODE 1410-03-M

NATIONAL ADVISORY COMMITTEE ON OCEANS AND ATMOSPHERE

Meeting Addendum

November 24, 1980.

The agenda for the meeting of the National Advisory Committee on Oceans and Atmosphere (NACOA) scheduled for December 1-2, 1980, published in the Federal Register of November 20, 1980 (Page 76812), has been changed. The amended agenda is as follows for December 1, 1980:

Monday, December 1, 1980

Plenary Session

9:00 a.m.-9:30 a.m.: Opening remarks—Chairman.

9:30 a.m.-10:30 a.m.: Steering Committee meeting.

10:30 a.m.-Noon: Law of the Sea.

Noon-1:00 p.m.: Lunch.

1:00 p.m.-4:00 p.m.: Panel meetings:

Support for Atmospheric Research Facilities, Louis J. Battan, Chairman.

Topic: Computer Facilities

Invited Participants:

Representative: Invited Participants:

Dr. Walter Macintyre, National Center for Atmospheric Research

Dr. Fred Mosher, Space Science and Engineering Center, University of Wisconsin-Madison

Dr. James O'Brien, Florida State University

Dr. Joseph Smagorinsky, Director, Geophysical Fluid Dynamics Laboratory

National Oceanic and Atmospheric Administration

1:00 p.m.-2:30 p.m.: Fisheries—Activity Planning, Jay G. Lanzillo & George Tapper, Co-Chairmen, Room B-100.

2:30 p.m.-3:30 p.m.: Ocean Minerals—Activity Planning, Burt H. Keenan, Chairman, Room B-100.

4:00 p.m.-5:00 p.m.: Plenary session: Federal Ocean Program

Speaker: Martin Belsky, Assistant Administrator for Policy and Planning, National Oceanic and Atmospheric Administration

5:00 p.m.: Adjourn.

Persons desiring to attend will be admitted to the extent seating is available. Persons wishing to make formal statements should notify the Chairman in advance of the meeting. The Chairman retains the prerogative to impose limits on the duration of oral statements and discussions. Written statements may be submitted before or after each session.

Additional information concerning this meeting may be obtained through the Committee's Executive Director, Steven N. Anastasion, whose mailing addresss is: National Advisory Committee on Oceans and Atmosphere, 3300 Whitehaven Street, NW., (Room 438, Page Building No. 1), Washington, DC 20235. The telephone number is (202) 653-7818.

Steven N. Anastasion,

Executive Director.

[FR Doc. 80-37095 Filed 11-26-80; 8:45 am]

BILLING CODE 3510-12-M

NATIONAL FOUNDATION ON THE ARTS AND THE HUMANITIES

Humanities Panel: Meetings

AGENCY: National Endowment for the Humanities.

ACTION: Notice of meetings.

SUMMARY: Pursuant to the provision of the Federal Advisory Committee Act (Pub. L. 92-463, as amended), notice is hereby given that the following meetings of the Humanities Panel will be held at 906 15th Street, N.W., Washington, DC 20506:

Date: December 16, 1980.
Time: 9:00 a.m. to 5:30 p.m.
Room: 314.
Program: This meeting will review applications for Summer Stipends in Art History, submitted to the Division of Fellowships and Seminars, for projects beginning after January 1, 1981.

Date: December 17, 1980.
Time: 9:00 a.m. to 5:30 p.m.
Room: 314.
Program: This meeting will review applications for Summer Stipends in Anthropology, Archaeology, And Folklore, submitted to the division of Fellowships and Seminars, for projects beginning after January 1, 1981.

Date: January 14, 1981.
Time: 9:00 a.m. to 5:30 p.m.
Room: 314.
Program: This meeting will review applications for Summer Stipends in Philosophy II, submitted to the Division of Fellowships and Seminars, for projects beginning after January 1, 1981.

Date: January 12, 1981.
Time: 9:00 a.m. to 5:30 p.m.
Room: 314.
Program: This meeting will review applications for Summer Stipends in Philosophy II, submitted to the Division of Fellowships and Seminars, for projects beginning after January 1, 1981.

Date: January 8, 1981.
Time: 9:00 a.m. to 5:00 p.m.
Room: 1134.
Program: This meeting will review applications submitted for the Libraries Humanities Projects Program, Division of Public Libraries Programs for projects beginning after January 13, 1981.

The proposed meetings are for the purpose of Panel, discussion, evaluation and recommendation of application for financial assistance under the National Foundation on the Arts and Humanities Act of 1965, as amended by grant applicants. Because the proposed meetings will consider information that is likely to disclose,

(1) trade secrets and commercial or financial information obtained from a person and privileged or confidential;

(2) information of a personal nature the disclosure of which would constitute

a clearly unwarranted invasion of personal privacy; and

(3) information the disclosure of which would significantly frustrate implementation of proposed agency action;

pursuant to authority granted me by the Chairman's Delegation of Authority to Close Advisory Committee Meetings, dated January 15, 1978, I have determined that these meetings will be closed to the public pursuant to subsections (c)(4), (6) and (9)(B) of section 552b of Title 5, United States Code.

Further information about these meetings can be obtained from Mr. Stephen J. McCleary Advisory Committee Management Officer, National Endowment for the Humanities, Washington, DC 20506, or call (202) 724-0367.

Stephen J. McCleary,

Advisory Committee Management Officer.

[FR Doc. 80-37098 Filed 11-26-80; 8:45 am]

BILLING CODE 7536-01-M

NATIONAL TRANSPORTATION SAFETY BOARD

[N-AR 80-48]

Reports, Recommendations and Responses; Availability

Highway Safety Effectiveness Evaluations

Traffic Barrier Systems (NTSB-SEE-80-5).—In this, the first of two evaluation reports released during the past week, the National Transporation Safety Board calls for mandatory performance standards for highway traffic barriers to help end needless traffic accident deaths. This study evaluates the adequacy of bridge and highway barrier systems, reviews the Safety Board's past accident investigation in this area, analyzes the results of recent crash-testing sponsored by the Federal Highway Administration, and makes recommendations concerning performance standards for traffic barriers.

The Safety Board notes that evidence from both accident investigation and recent crash testing clearly indicates that current traffic barriers do not safely contain and redirect the range of vehicles which use the roadway, yet research has shown that barriers can be designed which not only keep vehicles from leaving the highway but which redirect vehicles in a manner that minimizes impact forces on vehicle occupants. Crash-test research also has revealed a special and potentially serious problem of incompatibility between barrier systems and some vehicles, particularly schoolbuses and front wheel drive subcompact cars. These vehicles' front wheels can "snag" on the barriers and the impact forces can then tear loose the front axle and wheels.

Traffic barriers are roadside hardware of various designs and materials which are intended to protect vehicles from such off-the-road hazards as trees, embankments, ravines, signposts, bridge support pillars or abutments, or other hazards. Recent studies have shown a substantial number of cases, however, where barriers have failed to protect vehicle occupants. Data from the Fatal Accident Reporting System of the National Highway Traffic Safety Administration for 1975 indicate that over 2,000 persons died in single-vehicle accidents in which the first harmful event involved striking a highway barrier, bridge, or overpass.

To correct these and other hazards, the Board calls for mandatory peformance standards for barriers, including compliance testing through staged crashes. The purpose of such standards would be to require that traffic barrier types be crash-tested to demonstrate their ability to meet a set of established safety criteria. At present, barriers are not required to meet such criteria through crash-testing. Guidelines for barrier design are developed jointly by the American Association of State Highway and Transportation Officials (AASHTO) and the FHWA, but these essentially optional standards have failed to produce the best possible barrier systems.

In view of its findings as a result of this evaluation study, the Safety Board on October 24 issued, by separate letters, the following recommendations:

—to the *Federal Highway Administration:*

Establish mandatory performance standards, and associated test procedures to be used in determining compliance, for all traffic barriers constructed on Federal-aid roads after January 1, 1982. The performance standards should first address automobiles and should be expanded for heavier passenger vehicles and trucks as research is completed to provide needed information. (H-80-64)

Publish designs for traffic barrier systems which meet the performance standards to be established by the FHWA. Such traffic barrier designs should be available to States that do not desire to develop their own designs in accordance with the mandatory performance standards to be issued by the FHWA. The designs should be sufficient in number to meet the various State requirements with regard to climatic and other physical conditions that affect the operation and maintenance of a roadway system. (H-80-65)

Continue and expand performance testing of traffic barriers currently in use which were designed to meet AASHTO specifications and guidelines to determine their safe performance and immediately inform the States of the results of this testing. (H-80-66)

—to the *Secretary of Transportation:*

Establish a task force to examine the problem of front wheels on small front-wheel-drive vehicles being snagged and torn from the vehicle when impacting traffic barriers, as well as the failure of front axles and wheels of schoolbus-type vehicles in such impacts. The task force should determine what additional research is needed to further define the problem. A cooperative effort with the NHTSA, the FHWA, the AASHTO, and the automobile industry should be initiated to resolve any identified problem. (H-80-67)

—to the *Motor Vehicle Manufacturers Association; the Truck Body and Equipment Association, Inc.; and the Automobile Importers of America:*

Cooperate with the Department of Transportation in determining the nature of the hazard posed by front wheels of small front-wheel-drive vehicles being snagged when impacting traffic barrier systems and the failure of front axles and wheels of schoolbus-type vehicles in such impacts. >(H-80-68)

—to the *American Association of State Highway and Transportation Officials:*

Modify AASHTO guides and specifications regarding both bridge and highway barrier systems to require that the barriers comply with the mandatory performance standards to be established by the Federal Highway Administration. (H-80-69)

Each of the above recommendations is designated "Class II, Priority Action." The Safety Board notes, in both its evaluation report and the letter to FHWA, that recommendations H-74-38, H-77-4, H-77-12, H-79-19, H-80-25, and H-80-26, which relate to traffic barrier performance standards, are currently held in open status. The Board further states that if FHWA complies with recommendations H-80-64, H-80-65, and H-80-66, above, the six previous Board recommendations will be closed. Other Safety Board recommendations related to traffic barriers, which are currently open but which are not specifically superseded by the recommendations of the Board's evaluation report, are Nos. H-76-11, H-76-14, H-77-5, H-77-13, H-77-14, and H-77-21. (The full text of each of these earlier recommendations is provided in the Board's current evaluation report, No. NTSB-SEE-80-5, and in the four related recommendation letters.)

Selected State Highway Skid Resistance Programs (NTSB-SEE-80-6).—In its other safety effectiveness evaluation report released during the past week, the Safety Board urged the Federal Highway Administration to develop program objectives for a comprehensive wet weather highway

skid reduction program—part of the Board's continuing campaign to cut highway accidents through a nationwide improvement in skid resistance standards.

The Safety Board has investigated 12 highway accidents involving wet pavement, reviewed the skid resistance programs of 10 States, reviewed the States' responses to FHWA's Advance Notice of Proposed Rulemaking, "Skid Accident Reduction Program" (FHWA Docket No. 77-16), conducted a special study on the magnitude of the wet pavement problem, and conducted a limited review of literature reporting research activity conducted by the States. In its response to Docket No. 77-16, Notice No. 2, the Board urged FHWA to insure that future rulemaking proposals on other phases of skid resistance are coordinated into a comprehensive program.

The Board notes that there is a lack of systematic application of proven principles and practices by the States and FHWA. Past FHWA approaches have not been successful. As examples, the Board found that some of the fundamental skid resistance principles that are accepted today have been known over 20 years, that many local or county roads have never been skid tested, and that more than one State does not use accident records to define where testing is needed.

Under date of November 14, 1980, the Safety Board forwarded to FHWA comments on Advance Notice of Proposed Rulemaking, "Selection of Pavement Type," Docket No. 80-14, published at 45 FR 55763 on August 21, 1980. The Board's comments on this advance proposed rulemaking are restricted to the wearing surface of the pavement. The Board provided FHWA with a copy of the subject report, NTSB-SEE-80-6. In its November 14 letter, the Board concluded that when new pavements are being constructed, or old pavements are being reconstructed, the initial additional cost of providing a good skid resistant surface might be less than the cost incurred if an overlay is required within a short time. The Board further concluded that the frictional characteristics of the entire highway system would be improved over the years if skid resistant surfaces which maintain an acceptable frictional level throughout their service life were provided during construction or reconstruction.

To assure comprehensive, coordinated skid resistance programs, the Safety Board on October 6, 1980, directed a recommendation letter to FHWA containing the following "Class III, Longer Term Action" recommendations:

Develop program objectives for comprehensive wet weather skid resistance programs that can be used to both guide and evaluate State programs. (H-80-52)

After the program objectives have been developed, require each State to have an FHWA-approved wet weather skid resistance program which is subject to annual audit by FHWA. (H-80-53)

Issue a revised Federal-aid Highway Program Manual (FHPM 6.2.4.3) which promotes:

1. Full-width surface treatments.
2. Skid trailers with left and right wheel locking capabilities.
3. Skid testing at the posted speed limit, as proposed in the FHWA NPRM "Skid Resistance Pavement Surface Design."
4. Evaluation of the skid resistance properties of all newly develping surface treatments.
5. Increase Federal participation on skid resistance projects. (H-80-54)

Promote further research to examine:

1. The measurement of rutting and its effects on wet pavement accidents.
2. More effective signing system to advise motorists of safe speeds on slippery, rutted, or poorly drained wet surfaces and on all new surfaces.
3. Use of tire tread depths more representative of those used by motorists to measure skid resistance.
4. The effect on skid resistance of immediately allowing heavy truck traffic on newly constructed or newly overlayed surfaces. (H-80-55)

Develop a program to enhance dissemination of and the sharing among States of skid resistance information. Elements of the program should include:

1. The compilation of an instructional text for a state-of-the-art manual for Federal, State, local, and county agencies.
2. Periodic regional meetings to review skid resistance research and successful operating programs.
3. Periodic publication of a description of State programs and current research studies on skid resistance. (H-80-56)

Evaluate annually the progress of the State skid resistance programs in attaining program goals and publish the findings. (H-80-57)

Railroad Accident Report

Derailment of Western Pacific Railroad Company Freight Train Extra UP 3734 West (Sealand 6), Hayward, California, April 9, 1980 (NTSB-RAR-80-10).—The Safety Board's formal investigation report concerning this accident was released on November 20. The report shows that about 6:55 p.m., P.s.t., on April 9 the westbound freight train had its caboose, a pusher locomotive behind the caboose, and seven freight cars derailed while crossing the Industrial Parkway overpass at Hayward. Of the nine crewmembers, two train crewmembers were killed and two were injured. Three locomotive units and the caboose were destroyed. Damage was estimated at $1,382,000.

The Safety Board determined that the probable cause of the accident was the derailment of the caboose, which was caused by compressive forces resulting from excessive locomotive power applied behind the caboose on an undulating gradient. The derailment was the result of the failure of the responsible supervisors to insure that the train was powered and managed in a manner consistent with the rules, timetable instructions, and conventional operating practices; the failure of the assistant superintendent to insure that the crewmembers knew their train's correct tonnage and speed classification; and the failure of the Western Pacific Railroad management to insure that supervisors responsible for making critical operating decisions were properly trained for their roles. Contributing to the accident was the excessive speed of the train and the failure of the director of train operations to insure that the train had adequately fueled locomotive power.

Investigation of the accident disclosed that the Sealand 6 stalled on the grade east of Altamont, Calif., because two of its three locomotive units became ineffective. Train RBW-9 pushed the Sealand 6 to Altamont, where the assistant superintendent decided to continue the arrangement west of Altamont with the RBW-9's three 3,000-horsepower locomotive units coupled behind the Sealand 6's caboose. When the caboose reached the Industrial Parkway overpass at Hayward, it derailed, separated from the rest of the train, and fell 30 feet from the overpass onto the highway. The helper locomotive also derailed, and the middle unit fell on and crushed the caboose, killing the two crewmembers inside. After the locomotive fuel tanks ruptured the leaking fuel was ignited by fallen powerlines. The resulting fire engulfed the width of the parkway and threatened the adjacent overpass of the Bay Area Rapid Transit District (BART).

About 11 minutes after the accident, a northbound five-car BART train with passengers aboard crossed the Industrial Parkway overpass and proceeded beyond the emergency area. BART supervisors at the Hayward yard, about 1 mile south of the accident site, heard explosions and saw fire and smoke between the yard and BART's South Hayward station. They notified BART's Central Control by "hot line" telephone at 6:55:10 and 3 minutes later advised BART Central that the Hayward fire department had informed them that the fire was the result of the derailment of a WP freight train. At 7:01:20, the Hayward police contacted BART

Central and requested that no trains be operated through the fire area.

As a result of its investigation of this accident, the Safety Board on October 24, 1980, issued recommendation letters containing the following "Class II, Priority Action" recommendations:

—to the *Western Pacific Railroad Company:*

Take action with employees to determine that train operations are conducted according to operating rules. (R-80-41)

Provide supervisors and employees periodic, supervised training based on a uniform understanding of the operating rules, timetable instructions, and bulletin instructions. (R-80-42)

Review and amend its rules and instructions to provide comprehensive procedures for the safe operation of locomotives in helper service. (R-80-43)

Provide crewmembers with the proper classification of their train for speed purposes and the correct trailing tonnage of their train. (R-80-44)

Provide radios that operate on the Western Pacific frequency and which can adequately provide communication between both ends of the trains to crews of trains with foreign locomotive and/or caboose equipment. (R-80-45)

Develop and maintain on a current basis with the Bay Area Rapid Transit District a plan for immediate notification of any emergency occurring on the common right-of-way between Oakland and Fremont. (R-80-46)

—to the *Bay Area Rapid Transit District:*

Establish procedures to prevent trains from being operated into an area where an emergency exists until it is known that it is safe to do so. Develop and maintain on a current basis with the Western Pacific Railroad Company a plan for immediate notification of any emergency occurring on the common right-of-way between Oakland and Fremont. (R-80-47).

—to the *Urban Mass Transportation Administration, U.S. Department of Transportation:*

Require other rapid transit operations to establish adequate mutual emergency notification procedures in instances where rapid transit trains operate in close proximity to an operational railroad line. (R-80-48)

Aviation Safety Recommendation Letter

A-80-115 through -119, to the Federal Aviation Administration, November 19, 1980.—On June 12, 1980, an Air Wisconsin Swearingen SW-4 crashed during an encounter with a level 5 or greater thunderstorm in eastern Nebraska. Thirteen persons were killed and two persons were seriously injured. During its flight, the aircraft had been under the control of the Minneapolis Air Route Traffic Control Center's (ARTCC) Omaha low altitude sector, as well as other sectors within the same ARTCC. However, the Safety Board's investigation has revealed that none of the sector controllers transmitted information to the flightcrew regarding the location and intensity of the thunderstorm system in the path of the flight although other ARTCC air traffic control (ATC) and meteorological personnel had some information regarding the potential intensity characteristics of the storm system. Testimony given at a public hearing held in Omaha, Nebr., during September 1980 indicated that the full extent of the areas of precipitation and accurate intensity characteristics of convective meteorological phenomena are not portrayed on a controller's plan view display (PVD) because the weather fixed map unit (WFMU) is designed to be selective in its display of precipitation and is limited in its capability to display weather echo intensity levels. A controller's only alternative to obtain a more complete view of the precipitation in the area is to switch to the older broadband presentation; however, this equipment also does not have the capability of showing the various weather echo intensity levels. Further, the broadband presentation may not show aircraft which have already penetrated precipitation areas, essentially rendering this radar useless for purposes of vectoring aircraft out of area of precipitation.

Last February 24 a Beechraft Bonanza BE-35 aircraft crashed near Valdosta, Ga., during an encounter with severe thunderstorms. All the occupants aboard were killed when the aircraft experience an inflight breakup. On August 26, 1978, two persons were killed when a Piper PA-28 aircraft experienced an inflight breakup during an encounter with a severe thunderstorm near Bolton, N.C. In both accidents, ARTCC controllers attempted to provide weather information and avoidance vectors around areas of precipitation observed on the PVD's by switching to broadband presentations to obtain a more complete characterization of the weather than that displayed on the narrowband WFMU.

In the investigations of the three accidents cited above, ATC personnel alluded several times to the fact that, in some instances, inconsistencies between the weather displayed on the PVD and the actual weather encountered by the aircraft limited their ability to confidently assist aircraft.

Following investigation of an accident involving a Southern Airways DC-9 at New Hope, Ga., April 4, 1977, the Safety Board recommended expeditious development and implementation of a weather subsystem for en route and terminal radar environments which would be capable of providing real-time displays of precipitation or turbulence or both, and which would incorporate a multiple-intensity classification scheme (recommendation A-77-63). The Board believes the selective display of precipitation in the WFMU is an operationally sound concept where a limited distinction of precipitation levels is acceptable, but that it does not provide sufficient discrimination for effective and safe use of airspace in the vicinity of convective meteorological activity.

As part of its investigation of the June 12, 1980, crash, the Safety Board examined the National Weather Service (NWS) weather radar color remote displays located at the Cleveland ARTCC. The Board understands that FAA intends to test the possible use of similar displays as an adjuct to the present narrowband WFMU system, and the Board believes such use would significantly contribute to aviation safety. One practical application of the use of NWS weather radar information has already been demonstrated.

On the evening of September 22, 1980, an unusually large area of extreme convective weather extended from Ontario, Canada, south to Jonesboro, Ark. Several supervisors and controllers at the Cleveland ARTCC reported that, while experiencing difficulty in correlating the NWS radar maps with the ATC PVD maps, they were able to achieve sufficient correlation to issue advisories to aircraft regarding the extreme weather displayed on the NWS weather radar color remote displays in the center. In one notable instance, the PVD display of weather over the Detroit airport did not show the presence of the ongoing thunderstorm activity which was displayed clearly on the NWS weather radar color remote display. The controllers were able to use the NWS weather radar information to divert aircraft away from the Detroit airport. Throughout the evening of September 22, numerous air carrier flights were assisted in avoiding the weather which was characterized as severe and extreme on the NWS weather radar color remote displays. Comments by the ATC personnel were almost unanimously positive regarding this potential use of the NWS weather radar color display, even in the force of the problems of map correlation and weather intelligence updating which FAA is seeking to resolve before the test program is begun.

While FAA's contemplated tests cannot begin until some remaining mapping graphics problems have been solved, the Board is concerned that the testing period may not be scheduled

during the seasonal period when the most intensive evaluation of convective activity might be achieved. Moreover, the Board is aware that, in the immediate future, the Cleveland ARTCC's Center Weather Service Unit (CWSU) is scheduled to acquire 25-inch NWS weather radar color remote displays which will enable the CWSU meteorologists to obtain real-time weather information directly from NWS weather radars. We believe that installation of these displays in all ARTCC's having CWSU's should be expedited to provide real-time depiction of the location and intensity of all convective meteorological phenomena affecting a center's airspace. Had such systems been in place before the accidents cited herein, the likelihood of their occurence could have been greatly diminished. Therefore, the Safety Board recommends:

Expedite the delivery of NWS weather radar color remote displays to all Air Route Traffic Control Centers' Center Weather Service Units. (A-80-115)

Schedule the planned testing of NWS weather radar color remote displays at the Cleveland Air Route Traffic Control Center to encompass the next season of frequent convective meteorological activity. (A-80-116)

Expedite the development of appropriate graphic mapping techniques for correlation of the NWS weather radar color remote display and the air traffic controller's radar display presentation. (A-80-117)

Expedite the development of an integrated weather radar/air traffic control radar single video display system capable of providing multiple weather echo intensity discrimination without derogation of air traffic control radar intelligence. (A-80-118)

Require air route traffic control centers to make maximum use of the existing National Weather Service radar sites as inputs to the color remote displays at their facilities. (A-80-119)

Each of the above recommendations is designated "Class II, Priority Action."

Responses to Safety Recommendations

Aviation

A-80-82 through -84, from the Federal Aviation Administration, November 13, 1980.—Response is to recommendations issued September 4 following investigation of the crash of an Aerospatiale Lama 315B helicopter, N67103, near Dillon, Mont., July 28, 1980. (See 45 FR 62232, September 18, 1980.)

Recommendation A-80-82 called on FAA to issue a telegraphic Airworthiness Directive (AD) to require immediate compliance with the tail rotor drive system inspection criteria specified in the telegraphic bulletin issued by Aerospatiale Helicopter Company on August 14, 1980, the inspection applying to the 315 Lama and 316B, 316C, and 319 Alouette III model helicopters. FAA concurs in the recommendation and reports that AD T-80-19-51 was issued by FAA's European Region on September 5, 1980 (copy provided).

FAA also concurs in recommendation A-80-83 which asked that, based on the results of the initial inspection specified in the manufacturer's telegraphic bulletin, FAA consider a requirement for an inspection for excessive radial motion in the tail rotor drive system as part of the existing preflight inspection. FAA reports that the appropriate General Aviation Airworthiness Alert was included in FAA Advisory Circular, AC-43-16, alert No. 27 for October 1980. Applicable portions of this publication are attached to FAA's response. FAA interprets "excessive radial motion," the terminology used by the Board, to mean excessive backlash, and is referenced as such in this document.

Recommendation A-80-84 asked FAA to notify all main transmission overhaul facilities of these two occurrences and emphasize the need for strict adherence to the manufacturer's buildup instructions for pinion gear installation and proper torquing of the retaining nut. FAA reports that the Telegraphic Airworthiness Directive, T-80-19-51, issued September 5 covering inspection of the tail rotor gear train, will alert repair agencies of the mandatory inspection required on the Aerospatiale SA-315 Lama 316B, 316C, and 310 Allouette III, Tail Rotor Drive System.

FAA further notes that the notice published in the General Aviation Airworthiness Alerts referred to in recommendation A-80-83 will also serve to alert operators of the requirement to place special emphasis on the preflight checklist to check the tail rotor output shaft for excessive backlash. FAA also intends to prepare a notice for publication in the General Aviation Airworthiness Alerts (AC 43-16) to alert helicopter main transmission overhaul agencies to emphasize the need for strict adherence to the manufacturer's overhaul and buildup instructions for pinion gear installation and proper torquing of the retaining nut. The document will be forwarded to the Board as soon as it becomes available.

A-80-85, from the Federal Aviation Administration, November 13, 1980.—Response is to a recommendation issued by the Board on August 28 as a result of investigation of an inflight fire occurring aboard an Aerospatiale SA-330 helicopter inbound to Quonset Point, R.I., August 26, 1980. (See 45 FR 60052, September 11, 1980.)

In response to the recommendation, which asked FAA to issue an emergency AD for all Aerospatiale helicopter models SA-330 to inspect, separate, and secure electrical wires that are near hydraulic lines between fuselage stations 5295 and 5600, FAA reports that, based upon its investigation and evaluation of the incident, an emergency telegraphic AD, No. T80-18-51, was issued on August 29 (copy provided).

Highway

H-80-50 and -51, from the Federal Highway Administration, November 18, 1980.—Response concerns recommendations issued September 18 as a result of investigation of the head-on collision of a sedan and a pickup truck on U.S. Route 64 near Perry, Okla., February 23, 1980. (See 45 FR 67174, October 9, 1980.)

Recommendation H-80-50 asked FHWA to evaluate the effectiveness of the "Limited Sight Distance" sign (W14-4-MUTCD) and report its findings to the Board. Recommendation H-80-51 asked that, if the W14-4 sign is found to be ineffective, FHWA then devise an effective method of warning motorists of the incompatibility of operating speeds, current vehicle design eyeheight, and limited sight distance situations that exist on roads designed to pre-1965 standards.

In response to these recommendations, FHWA notes that the W14-4 sign is intended to alert drivers to a situation which exists all too frequently on older highways—very sharp crest vertical curves. FHWA reports that when the 1978 edition of the Manual on Uniform Traffic Control Devices (MUTCD) was published, FHWA held briefings in each FHWA Region and at least one in each State—a total of 63—to highlight changes in the MUTCD. The W14-4 sign was noted as new, and it was stressed that the sign should not be used alone but should be supplemented with more specific information such as an Advisory Speed Plate (W13-1). FHWA Says it is aware that some States have begun to use the sign, but because of the limited experience, FHWA is at present unable to determine how effective it is. FHWA is preparing the solicitation for research problem statements for safety research in FY 1982 and beyond. FHWA recognizes the need for an objective evaluation of the W14-4 sign. A problem statement on the evaluation of the W14-4 sign will be prepared and included with the other problem statements received during the formal solicitation for priority ranking. FWHA shares the Board's concern about the compatibility of traffic control devices with highway

design, vehicle design, and operating speeds.

Note.—Single copies of Safety Board reports are available without charge, as long as limited supplies last. Copies of Board recommendation letters, responses and related correspondence are also provided free of charge. All requests for copies must be in writing, identified by recommendation or report number. Address requests to: Public Inquiries Section, National Transportation Safety Board, Washington, D.C. 20594.

Multiple copies of Safety Board reports may be purchased from the National Technical Information Service, U.S. Department of Commerce, Springfield, Va. 22161.

(49 U.S.C. 1903(a)(2), 1906)

Margaret L. Fisher,

Federal Register Liaison Officer.

November 24, 1980.

[FR Doc. 80-37087 Filed 11-26-80; 8:45 am]

BILLING CODE 4910-58-M

NUCLEAR REGULATORY COMMISSION

Advisory Committee on Reactor Safeguards, Subcommittees on Site Evaluation and Reactor Radiological Effects; Meeting

The ACRS Subcommittees on the Site Evaluation and Reactor Radiological Effects will hold a meeting at 8:30 a.m. on December 13, 1980 in Room 1046, 1717 H Street, NW., Washington, D.C. to discuss the Generic Environmental Impact Statement on Class-9 Accidents at nuclear power plants. Also, the Subcommittees will discuss and summarize the previous two days meetings on the ACRS Annual Report to Congress regarding the NRC Reactor Safety Research Program Budget, and the discussion on radiation standards for workers.

In accordance with the procedures outlined in the Federal Register on October 7, 1980 (45 FR 66535), oral or written statements may be presented by members of the public, recordings will be permitted only during those portions of the meeting when a transcript is being kept, and questions may be asked only by members of the Subcommittee, its consultants, and Staff. Persons desiring to make oral statements should notify the Designated Federal Employee as far in advance as practicable so that appropriate arrangements can be made to allow the necessary time during the meeting for such statements.

The entire meeting will be open to public attendance except for those sessions during which the Subcommittee finds it necessary to discuss the ACRS Annual Report to Congress on the NRC Reactor Safety Research Budget. One or more closed sessions may be necessary to discuss such information. (SUNSHINE ACT EXEMPTION (9)(B)). To the extent practicable, these closed sessions will be held so as to minimize inconvenience to members of the public in attendance.

The agenda for subject meeting shall be as follows: *Saturday, December 13, 1980, 8:30 a.m. until the conclusion of business.*

During the initial portion of the meeting, the Subcommittee, along with any of its consultants who may be present, will exchange preliminary views regarding matters to be considered during the balance of the meeting.

The Subcommittee will then hear presentations by and hold discussions with representatives of the NRC Staff, their consultants, and other interested persons regarding this review.

Further information about topics to be discussed, whether the meeting has been cancelled or rescheduled, the Chairman's ruling on requests for the opportunity to present oral statements and the time allotted therefor can be obtained by a prepaid telephone call to Mr. Garry G. Young, ACRS Staff (telephone 202/634-1414) between 8:15 a.m. and 5:00 p.m., EST. The cognizant Designated Federal Employee for this meeting is Mr. John C. McKinley.

The ACRS is required by Section 5 of the 1978 NRC Authorization Act to review the NRC Reactor Safety Research Program and Budget and to report the results of the review to Congress. In order to perform this review, the ACRS must be able to engage in frank discussions with members of the NRC Staff and such discussions would not be possible if held in public sessions. I have determined, therefore, in accordance with Subsection 10(d) of the Federal Advisory Committee Act (Pub. L. 92-463), that, should such sessions be required, it is necessary to close portions of this meeting to prevent frustration of the above stated aspect of the ACRS' statutory responsibilities. The authority for such closure is 5 U.S.C. 552b(c)(9)(B).

Dated: November 24, 1980.

John C. Hoyle,

Advisory Committee, Management Officer.

[FR Doc. 80-37004 Filed 11-26-80; 8:45 am]

BILLING CODE 7590-01-M

"Guidelines for Utility Management Structure and Technical Resources," Report NUREG-0731

AGENCY: Nuclear Regulatory Commission.

ACTION: Extension of comment period.

SUMMARY: The availability of and a request for comments on NUREG-0731, Guidelines for Utility Management Structure and Technical Resources, was noticed in the Federal Register on October 7, 1980 (45 FR 66538). The original comment period expired on November 20, 1980. Requests for an extension of the comment period have been received. Accordingly, the comment period is extended to December 19, 1980.

DATE: Comment period expires December 19, 1980.

ADDRESS: Copies of the report are available free from GPO Sales Program, Division of Technical Information and Document Control, U.S. Nulcear Regulatory Commission, Washington, D.C. 20555.

FOR FURTHER INFORMATION CONTACT: Mr. Lawrence P. Crocker, (301) 492-9437.

SUPPLEMENTARY INFORMATION: Interested persons are invited to submit written comments to Mr. Domenic B. Vassallo, Chief, Licensee Qualifications Branch, U.S. Nuclear Regulatory Commission, Washington, D.C. 20555, on or before December 19, 1980.

Dated at Bethesda, Maryland, this 20th day of November 1980.

For the Nuclear Regulatory Commission.

Domenic B. Vassallo,

Chief, Licensee Qualification Branch, Division of Human Factors Safety.

[FR Doc. 80-37005 Filed 11-26-80; 8:45 am]

BILLING CODE 7590-01-M

PRESIDENT'S ADVISORY COMMITTEE FOR WOMEN

Meeting

Pursuant to the provisions of the Federal Advisory Committee Act (Pub. L. 92-463 as amended), notice is hereby given of a meeting of the President's Advisory Committee for Women

Date, time and place: December 16, 1980.

Open business session: 10:00-12:00 p.m., Room N-5437, Department of Labor, 200 Constitution Avenue, NW., Washington, D.C.

Purpose: Meeting of the President's Advisory Committee for Women.

Warlene Gary,

Deputy Director.

November 18, 1980.

[FR Doc. 80-37099 Filed 11-26-80; 8:45 am]

BILLING CODE 4510-23-M

SECURITIES AND EXCHANGE COMMISSION

[Release No. 17326; SR-Amex-80-31]

American Stock Exchange, Inc.; Filing of Proposed Rule Change and Order Approving Proposed Rule Change

November 21, 1980.

Pursuant to Section 19(b)(1) of the Securities Exchange Act of 1934, 15 U.S.C. 78(s)(b)(1) (the "Act"), notice is hereby given that on November 14, 1980, the American Stock Exchange, Inc. ("Amex"), 86 Trinity Place, New York, New York 10006, filed with the Commission copies of a proposed rule change which replaces a requirement that members submit monthly reports of certain uncovered short positions with a requirement that such reports be submitted only upon request.

Interested persons are invited to submit written data, views and arguments concerning the submission within 21 days from the date of this publication. Persons desiring to make written comments should file six copies thereof with the Secretary of the Commission, Securities and Exchange Commission, 500 North Capitol Street, Washington, D.C. 20549. Reference should be made to File No. SR-Amex-80-31.

Copies of the Submission, all subsequent amendments, all written statements with respect to the proposed rule change which are filed with the Commission, and all written communications relating to the proposed rule change between the Commission and any person, other than those which may be withheld from the public in accordance with the provisions of 5 U.S.C. 552, will be available for inspection and copying at the Commission's Public Reference Room, 1100 L Street, N.W., Washington, D.C.

The Commission finds that the proposed rule change is consistent with the requirements of the Act and the rules and regulations thereunder applicable to national securities exchanges, and in particular, the requirements of Section 6 and the rules and regulations thereunder.

The Commission finds good cause for approving the proposed rule change prior to the thirtieth day after the date of publication of notice of filing thereof, in that a similar proposal by the CBOE,[1] for which opportunity for public comment was provided, was recently approved by the Commission.[2]

It is therefore ordered, pursuant to Section 19(b)(2) of the Act, that the proposed rule change reference above be, and it hereby is, approved.

For the Commission, by the Division of Market Regulation pursuant to delegated authority.

George A. Fitzsimmons,

Secretary.

[FR Doc. 80-37019 Filed 11-26-80; 8:45 am]

BILLING CODE 8010-01-M

[1] *See* File No. SR-CBOE-80-24.

[2] Securities Exchange Act Release No. 17244 (October 24, 1980).

[Release No. 11454; 812-4661]

Merrill Lynch, Pierce, Fenner & Smith Inc., et al.; Filing of Application

November 21, 1980.

Notice is hereby given that Merrill Lynch, Pierce, Fenner & Smith Incorporated, Bache Halsey Stuart Shields Incorporated, Dean Witter Reynolds, Inc., Shearson Loeb Rhoades, Inc. ("Sponsors") and The Equity Income Fund, First Utility Common Stock Series and subsequent Series ("Fund") (collectively the "Applicants", c/o Merrill Lynch, Pierce, Fenner & Smith Incorporated, One Liberty Plaza, 165 Broadway, New York, New York 10080), filed an application on April 8, 1980, and amendments thereto on July 24, October 6, and November 17, 1980, pursuant to Sections 6(c) and 11 of the Act for an order of the Commission (1) exempting the Fund from compliance with the net worth requirements of Section 14(a) of the Act, (2) exempting the Applicants from the provisions of Rule 19b-1 under the Act to permit the Fund to make more than one distribution of capital gains in any one taxable year and (3) exempting the Applicants from the provisions of Section 11(c) and 22(d) of the Act to permit unitholders to exchange their units for units of any other Series of the Fund or of certain other unit investment trusts. All interested persons are referred to the application on file with the Commission for a statement of the representations contained therein, which are summarized below.

Applicants state that the format for each Series of the Fund will be substantially the same. Each Series will be created by a trust indenture ("Indenture") between the Sponsors and a trustee and/or co-trustee ("Trustee"). Other firms may act as sponsor or sponsors of future Series in addition to or in substitution for the Sponsors, but if none of the Sponsors would remain a Sponsor as a result of any proposed substitution, the Sponsors will cause to be filed a new registration statement under the Act concerning the Fund. In addition, different entities may be named Trustee for future Series. Prior to the deposit of underlying securities ("Securities") in a Series the Sponsors purchase such Securities for an accumulation account. It is contemplated that the Securities purchased for deposit in the various Series will generally be publicly-traded common stocks issued by public utility companies engaged in the production, transmission and distribution of electric energy, gas, water and telephone services, but, depending on the availability of offerings of appropriate securities and general market conditions, the kinds of securities may include other appropriate types of common stocks.

Applicants indicate that upon effectiveness of the registration statement pursuant to the Securities Act of 1933, the units of Series are offered to the public separately through a final prospectus at a public offering price computed by dividing the aggregate value of the underlying Securities by the number of units outstanding, plus a sales charge and, during the initial public offering (including the initial public offering of additional units of the Fund), a fee for New York State stock transfer tax applicable to the deposit of Securities in the Fund. A proportionate share of the amount in the income account (established by the Indenture) at the date of delivery of the units to the purchaser is added to the public offering price.

Applicants state that the redemption price per unit is computed by the Trustee on each June 30 and December 31 (or the last business day prior thereto), on any business day as of the evaluation time next following the tender of any unit for redemption, and on any other business day desired by the Trustee, by adding (a) the aggregate value of the Securities determined by the Trustee (including the value of any accumulated but unpaid dividends as to which Securities are not trading "ex-dividend" as of the date of computation) and (b) cash on hand in the Fund (including dividends receivable on Securities trading ex-dividend but excluding cash deposited by the Sponsors for the purchase of Securities) and deducting therefrom the sum of taxes or other governmental charges against the Fund not previously deducted, accrued expenses of the Trust Fund including, but not limited to, unpaid fees and expenses of the Trustee (including legal and auditing expenses), the Co-Trustee, the Sponsors (for their administrative function) and counsel, and cash held for distribution to certificateholders of record as of a date

prior to the evaluation; and dividing the result of such computation by the number of units outstanding as of the date thereof.

The Applicants represent that while the Sponsors are not obligated to do so, it is their intention to maintain a market for units of each Series and continuously to offer to purchase such units at prices, subject to change at any time, equal to the current redemption price of units in each Series. If the supply of units of any Series exceeds demand, or for some other business reason, the Sponsors may discontinue at any time purchases of units of such Series.

In addition, the Applicants state that the Sponsors intend to allow unitholders to exchange units of any Series for units of any other Series of the Fund and of certain series of Municipal Investment Trust Fund, The Corporate Income Fund or The Government Securities Income Fund (the "Exchange Funds") on the basis of a reduced fixed sales charge per unit ("Exchange Option"). While the structures of the Exchange Funds and the various series are very similar in most respects to each other and to the Fund, the investment objectives of the Exchange Funds may be different. Thus, the primary objective of the Municipal Investment Trust Fund is tax-exempt income while the primary investment objective of The Corporate Income Fund and The Government Securities Income Fund is income which is subject to Federal income taxation, and subgroupings of series under the basic Exchange Funds have investment objectives which are slightly different evidencing specialized investment objectives within these general categories. This Exchange Option, according to Applicants, would have the effect of providing unitholders of Series of the Fund with a convenient means of transferring interests as their investment requirements change into other series of the Exchange Funds, and would serve as an alternative to disposition of a unitholder's interest, either in the secondary market or through redemption. The Applicants state that the Sponsors intend to hold the Exchange Option open under most circumstances, but that they do, however, reserve the right to modify, suspend or terminate the Exchange Option at any time without further notice to unitholders.

The Applicants state that while it is anticipated that units in most cases can be sold in the secondary market for an amount equal to the redemption price per unit, units may be submitted to the Trustee for redemption at any time out of assets of the Series. Consistent with Rule 22c-1, the unitholder would receive cash in an amount per unit equal to the redemption price per unit as determined on any business day as of the evaluation time next following such tender.

The application provides that the Sponsors may direct the Trustee to dispose of Securities upon the occurrence of certain market or credit factors that in the opinion of the Sponsors would make the retention of such Securities in the Series detrimental to the interests of the unitholders, or if the disposition of such Securities is made desirable in the opinion of the Sponsors by the existence of certain other technical factors which will be described in the prospectus for the Series. The proceeds of any such dispositions may be distributed to unitholders or may be reinvested in accordance with the provisions of the Indenture for the Series.

The Applicants state that dividend income (including any redemption proceeds received in respect of publicly traded equity securities) received by a Series, less applicable expenses, will be distributed monthly on a pro rata basis to unitholders of record as of the record day on the next following distribution day. The Trustee furnishes unitholders with each distribution a statement of the amount per unit of income and other receipts, if any, which are being distributed. Within a reasonable period after after the end of each calendar year the Trustee will furnish to each person who at any time during the calendar year was a unitholder of record a statement in reasonable detail (i) summarizing transactions for such year in the income, capital and reserve accounts, (ii) identifying Securities sold and purchased during and listing Securities held at the end of such year, (iii) stating redemption price per unit based upon the computation thereof made on the 31st day of December of such year (iv) specifying the amounts distributed during such year from the income and capital accounts; and (v) if applicable, summarizing transactions for such year with respect to such person's participating in the reinvestment program.

Section 14(a) of the Act provides that a registered investment company, prior to making a public offering of its securities, (1) have a net worth of at least $100,000, (2) have previously made a public offering and at that time have had a net worth of $100,000 or (3) have made arrangements for at least $100,000 to be paid in by 25 or fewer persons before acceptance of public subscriptions.

The Applicants represent that each Series, at the date of deposit of the underlying Securities and before any unit is offered to the public, is intended to have a net worth, represented by the market value of the securities on that date in excess of $100,000. The Sponsors intend to sell all the units to the public at a public offering price disclosed in the prospectus for each Series, which will also contain information concerning the securities deposited in the particular Series. The Sponsors also intend to maintain a secondary market for units of each Series at prices equal to the redemption value of the units as of the time of each regular evaluation. It is the contention of the Applicants that the proposed course of conduct of the Sponsors outlined above, as well as the history of the Sponsors in the securities industry, demonstrates that each Series will be managed in a responsible way by responsible persons. The Applicants also contend that any requirement that the Sponsors invest in $100,000 or more of units of each Series under investment letters would only increase the cost to the Sponsors of marketing the units without creating any significant increase in the protection of unitholders. The Applicants also contend that each Series will have a net worth far in excess of $100,000 fully invested in securities on the date of deposit for each Series and will therefore fully comply with Section 14(a)(1).

In connection with their request for exemption, the Applicants agree, as a condition to such exemption, that they will refund, on demand and without deduction, all sales charges to purchasers of units of any Series from the Sponsors or from any underwriter or dealer participating in the distribution and liquidate the Securities held by any Series and distribute the proceeds thereof, if, within ninety days from the time that the registration statement relating to the units of such Series shall have become effective under the Securities Act of 1933, the net worth of the Series should be reduced to less than $100,000 or if such Series shall have been terminated. The Sponsors further agree to instruct the Trustee to terminate such Series in the event redemption by the Sponsors of units which have not been sold in the initial distribution thereof results in such Series having a net worth of less than 40% of the net worth of Securities in its original portfolio, and in the event of any such termination the Sponsors will refund, on demand and without deduction, all sales charges to purchasers of units of such Series from the Sponsors or from any underwriter or dealer participating in the distribution. The Sponsors further agree that any

future Sponsor will, as a condition to becoming a Sponsor, agree to the foregoing undertakings.

Rule 19b-1(a) provides in substance that no registered investment company which is a "regulated investment company" as defined in Section 851 of the Internal Revenue Code shall distribute more than one capital gain dividend in any one taxable year.

The Applicants state that distributions of net investment income are made to unitholders each month. Applicants state that any net realized capital gains will not be distributed on any Series more frequently than once a year unless and until the Commission orders Applicants exempted from Rule 19b-1. Distributions of capital to unitholders are likely to arise only in the following instances: (1) Securities might be liquidated in order to provide the funds necessary to meet redemptions and (2) Securities may be disposed of in order to maintain the qualification of such Series as a regulated investment company under the Internal Revenue Code.

The application states that the dangers against which Rule 19b-1 is intended to guard do not exist in the case of the fund since events which might give rise to capital gains, such as the tendering of units for redemption, the prepayment of Securities or other market or credit factors and the need to maintain qualification as a regulated investment company will be substantially independent of any action by the Sponsor and the Trustee. The regular distribution per unit will be fairly constant within a specified range and return of capital or any capital gains distribution will be clearly distinguished from income distribution in the accompanying report by the Trustee to unitholders. In order to comply with the literal requirements of Rule 19b-1, each Series would be forced to hold any monies constituting capital gains from the disposition of Securities until the end of its taxable year. Applicants contend that such a practice would be to the detriment of the unitholders.

Paragraph (b) of Rule 19b-1 provides that a unit investment trust may distribute capital gains dividends received from a regulated investment company within a reasonable time after receipt. Applicants assert that the purpose behind such provision is to avoid forcing a unit investment trust to accumulate valid distributions received throughout the year until year end and that the operations of the Fund in this regard are squarely within the purpose of such provision.

Section 11(c) of the Act prohibits any type of offer of exchange of the securities of registered unit investment trusts for the securities of any other investment company unless the terms of the offer have been approved by the Commission or are in accordance with rules and regulations prescribed by the Commission with respect to such offers. Section 22(d) of the Act prohibits a registered investment company from selling any redeemable security issued by it except either to or through a principal underwriter for distribution other than at the current public offering price described in its prospectus. None of the exemptions from the provisions of Section 11 or 22(d) appear to apply to the proposed Exchange Option. Applicants therefore would be unable to proceed with the Exchange Option unless, pursuant to Sections 6(c) and 11 of the Act, the Commission exempts the Exchange Option from the provisions of Sections 11(c) and 22(d).

The Applicants state that it is intended that if the requested exemptions are granted, the Exchange Option would operate as follows: as indicated in the application and spelled out in more detail in the prospectus for the various series of the Exchange Funds, the Sponsors intend to maintain a market for units of each series of each Exchange Fund. The Exchange Option would be meant to operate only as to units of the various series of the Exchange Funds as to which such market may from time to time be maintained. A unitholder wishing to dispose of those of his units for which a market is maintained would have the option to exchange his units into units of any other series of any Exchange Fund for which a market is also maintained. While it is not presently contemplated that unitholders would be permitted to exchange their units into units of other series which are available on original issue, the Sponsors might at some future date determine to permit such exchanges. When any unitholder notifies the Sponsors of his desire to exercise his Exchange Option the Sponsors would deliver to such unitholder a current propectus for those series in which the unitholder has indicated an interest and which the Sponsors have available to offer to the unitholder as a result of acquisitions by them in the secondary market.

The Applicants state that the exchange transaction would operate in a manner essentially identical to any secondary transaction, except that the Sponsors seek authority to allow a reduced sales charge in a transaction pursuant to the Exchange Option. Without the Exchange Option, units of any series repurchased by the Sponsors are normally resold at a public offering price based upon the offering side evaluation of the underlying securities plus a sales charge of 3.25 percent or 3.9 percent of the public offering price depending on the nature of the portfolio making up the particular series.

The Underwriting Sponsors seek authority to sell units of Exchange Funds pursuant to the Exchange Option at a price equal to the offering side evaluation of the underlying securities divided by the number of units outstanding or in the case of the Fund, at the redemption price per unit, plus a fixed charge of $15 per unit. Such $15 fixed charge can be expected to approximate about 1.50 percent of the unit offering price but, of course, the actual percentage will change depending upon changes in market values of the underlying securities. The Sponsors reserve the right to change such fixed charge from time to time to the extent necessary to reflect fluctuations in the costs of professional assistance and operational expenses in connection with these exchange transactions.

The application provides that a person who purchased units of a series and paid a per unit sales charge less than the per unit sales charge of the series of Exchange Fund for which such unitholder desires to exchange would be permitted to exercise the Exchange Option at the unit offering price plus the sales charge of $15 per unit provided that such unitholder has held his units for a period of at least eight months. Any unitholder who has not held such units for an eight month period would be permitted to exchange such units at the unit offering price plus a sales charge basd on the greater of $15 per unit or an amount which together with the initial sales charge paid in connection with the acquisition of the units being exchanged equals the sales charge of the series for which such unitholders desire to exchange, determined as of the date of exchange.

The Applicants state that a unitholder would not be permitted to make up any difference between the amount representing the units being submitted for exchange and the units being acquired. That is to say, a unitholder would be permitted to acquire pursuant to the Exchange Option whole units only and any excess amounts representing sales price of units submitted for exchange would be remitted to the unitholder.

The Applicants state that under the proposed Exchange Option, a person desiring to dispose of units of one series and acquire units of another series may wish to do so for a number of reasons—such as changes in his or her particular

investment goals or requirements or in order to take advantage of possible tax benefits flowing from the exchange. Taking these factors into account it is likely that there will be a continuing need to assess an investor's individual financial and tax position and in all probability the account executives of the Sponsors will actively participate in financially counseling the investor as to the proper course of action to follow taking into account all of the relevant investment factors involved. However, the fact that the investor is an existing customer whose essential investment needs have been identified should produce some transaction savings. Further, as a result of the fact that all of the Exchange Funds are very similar investment vehicles, an exchanging unitholder may require somewhat less advice than if he was acquiring an interest in an entirely different kind of investment. It is the belief of Applicants that a charge of $15 is a reasonable and justifiable expense to be allocated for the professional assistance and operational expenses which are contemplated in connection with these exchange transactions. This sales charge compares favorably with the customary sales charge applicable to nonexchange transactions in connection with primary and secondary sales of units of the Exchange Funds and it is submitted that such a sales charge is warranted in that sales charges should cover the reasonable costs related to the exercise of the Exchange Option and yet give exchanging unitholders an opportunity to share in expected cost savings.

The Applicants maintain that the requirement that a holder of units of a series of the Exchange Funds which are acquired at a lower sales charge than that applicable to direct purchase of the units to be acquired under the Exchange Option pay an adjusted sales charge for an exchange during the first eight months in which he has held the units to be exchanged is appropriate in order to maintain the equitable treatment of the various investors in each series. Otherwise, it could be possible under certain circumstances for a person to acquire units of a series of an Exchange Fund with a lower sales charge and immediately to convert such units into other units of the same Exchange Fund or units of a series with a high sales charge and to pay a lower total sales charge than a person purchasing units of such series directly. Under normal circumstances this situation is unlikely, since the initial sales charge on direct purchases of units with a lower sales charge (currently 3.25 percent of the public offering price) plus the conversion sales charges ($15 per unit or aproximately 1.50 percent of the public offering price) usually will exceed the sales charge related to direct purchases of units of series with a higher sales charge (currently 3.90 percent). However, if the price of the units of series with the higher sales charge were to increase sharply, the $15 sales charge on exchange could represent less than the difference between the lower sales charge and the higher sales charge, in which case the exchanging unitholder could obtain an unfair price advantage when compared to investors making direct purchases of units of the applicable series. However, after a unitholder of a series with a lower sales charge has held such units for an adequate period of time, the discriminatory nature of permitting that person to effect an exchange transaction action at a reduced sales charge is not as compelling, and thus it is believed that the possible abuses outlined above are no longer material if the converting unitholder of a series with a lower sales charge has held his units for at least eight months.

The Applicants contend that the sales charge of $15 achieves a major goal of passing cost savings on to investors and yet fairly compensates brokers for their investment advice, financial planning and operational expenses. The cost savings incident to initial investor solicitation can be passed on to the customer and brokers can still be adequately compensated for services rendered.

Section 6(c) of the Act provides, in part, that the Commission may, upon application, conditionally or unconditionally exempt any person, security, or transaction, or any class or classes of persons, securities, or transactions, from any provision or provisions of the Act or of any rule or regulation under the Act, if and to the extent such exemption is necessary or appropriate in the public interest and consistent with the protection of investors and the purposes fairly intended by the policy and provisions of the Act.

Notice is further given that any interested person may, not later than December 15, 1980, at 5:30 p.m., submit to the Commission in writing, a request for a hearing on the application accompanied by a statement as to the nature of his interest, the reasons for such request and the issues, if any, of fact or law proposed to be controverted, or he may request that he be notified if the Commission shall order a hearing thereon. Any such communication should be addressed: Secretary, Securities and Exchange Commission, Washington, D.C. 20549. A copy of such request shall be served personally or by mail upon the Applicants at the address stated above. Proof of such service (by affidavit or, in the case of an attorney-at-law, by certificate) shall be filed contemporaneously with the request. As provided by Rule 0-5 of the Rules and Regulations promulgated under the Act, an order disposing of the application herein will be issued as of course following said date unless the commission thereafter orders a hearing upon request or upon the Commission's own motion. Persons who request a hearing, or advice as to whether a hearing is ordered, will receive any notices and orders issued in this matter, including the date of the hearing (if ordered) and any postponements thereof.

For the Commission, by the Division of Investment Management, pursuant to delegated authority.

George A. Fitzsimmons,

Secretary.

[FR Doc. 80-37013 Filed 11-26-80; 8:45 am]

BILLING CODE 8010-01-M

[Release No. 17324; SR-MSE-79-20]

Midwest Stock Exchange, Inc.; Order Approving Proposed Rule Change

November 21, 1980.

On September 17, 1980, the Midwest Stock Exchange, Incorporated, 120 South LaSalle Street, Chicago, Illinois 60603, filed with the Commission, pursuant to Section 19(b)(1) of the Securities Exchange Act of 1934, 15 U.S.C. 78(s)(b)(1) (the "Act") and Rule 19b-4 thereunder, copies of a proposed rule change which amends certain rules in order to facilitate the examination of members for compliance and conforms the Exchange rule to the Federal Reserve Board's margin rules.

Notice of the proposed rule change together with the terms of substance of the proposed rule change was given by publication of a Commission Release (Securities Exchange Act Release No. 34-17165, October 9, 1980) and by publication in the **Federal Register** (45 FR 68819, October 16, 1980). All written statements with respect to the proposed rule change which were filed with the Commission and all written communications relating to the proposed rule change between the Commission and any person were considered and (with the exception of those statements or communications which may be withheld from the public in accordance with the provisions of 5 U.S.C. § 552)

were made available to the public at the Commission's Public Reference Room.

The Commission finds that the proposed rule change is consistent with the requirements of the Act and the rules and regulations thereunder applicable to national securities exchanges, and in particular, the requirements of Section 6, and the rules and regulations thereunder.

It is therefore ordered, pursuant to Section 19(b)(2) of the Act, that the above-mentioned proposed rule changes be, and they hereby are approved.

By the Commission, by the Division of Market Regulation pursuant to delegated authority.

George A. Fitzsimmons,

Secretary.

[FR Doc. 80-37021 Filed 11-26-80; 8:45 am]

BILLING CODE 8010-01-M

Midwest Stock Exchange, Inc.; Applications for Unlisted Trading Privileges and of Opportunity for Hearing

November 20, 1980.

The above named national securities exchange has filed applications with the Securities and Exchange Commission pursuant to Section 12(f)(1)(B) of the Securities Exchange Act of 1934 and Rule 12f-1 thereunder, for unlisted trading privileges in the following stocks:

AAR Corporation, Common Stock, $1 Par Value (File No. 7-5784).

Gray Research Incorporated, Common Stock, $1 Par Value (File No. 7-5785).

These securities are listed and registered on one or more other national securities exchanges and are reported on the consolidated transaction reporting system.

Interested persons are invited to submit on or before December 12, 1980 written data, views and arguments concerning the above-referenced applications. Persons desiring to make written comments should file three copies thereof with the Secretary of the Securities and Exchange Commission, Washington, D.C. 20549. Following this opportunity for hearing, the Commission will approve the applications if it finds, based upon all the information available to it, that the extensions of unlisted trading privileges pursuant to such applications are consistent with the maintenance of fair and orderly markets and the protection of investors.

For the Commission, by the Division of Market Regulation, pursuant to delegated authority.

George A. Fitzsimmons,

Secretary.

[FR Doc. 80-37022 Filed 11-26-80; 8:45 am]

BILLING CODE 8010-01-M

[Release No. 17322; SR-NSCC-80-26]

National Securities Clearing Corporation ("NSCC"); Order Approving Proposed Rule Change

November 21, 1980.

On August 13, 1980, NSCC filed with the commission, pursuant to Section 19(b)(1) of the Securities Exchange Act of 1934, 15 U.S.C. 78s(b)(1) (the "Act") and Rule 19b-4 thereunder, a proposed rule change amending its rules to clarify that the corporation's facilities are available to Members and Non-Clearing Members as a conduit for submission of stock transfer tax reports and remittances required by the New York State Tax Law.

Notice of the proposed rule change together with the terms of substance of the proposed rule change was given by publication of a Commission Release (Securities Exchange Act Release No. 17097, August 28, 1980) and by publication in the Federal Register (45 FR 58996, September 5, 1980). No written comments were received by the Commission.

The Commission finds that the proposed rule change is consistent with the requirements of the Act and the rules and regulations thereunder applicable to registered clearing agencies, and in particular, the requirements of Section 17A of the Act.

It is therefore ordered, pursuant to Section 19(b)(2) of the Act, that the proposed rule change be approved.

For the Commission, by the Division of Market Regulation pursuant to delegated authority.

George A. Fitzsimmons,

Secretary.

[FR Doc. 80-37020 Filed 11-26-80; 8:45 am]

BILLING CODE 8010-01-M

Pacific Stock Exchange, Inc.; Application for Unlisted Trading Privileges and of Opportunity for Hearing

November 20, 1980.

The above named national securities exchange has filed an application with the Securities and Exchange Commission pursuant to Section 12(f)(1)(B) of the Securities Exchange Act of 1934 and Rule 12f-1 thereunder, for unlisted trading privileges in the common stock of:

Lilly (Eli) and Company, Common Stock, $.62½ Par Value (File No. 7-5783).

This security is listed and registered on one or more other national securities exchanges and is reported on the consolidated transaction reporting system.

Interested persons are invited to submit on or before December 12, 1980 written data, views and arguments concerning the above-referenced application. Persons desiring to make written comments should file three copies thereof with the Secretary of the Securities and Exchange Commission, Washington, D.C. 20549. Following this opportunity for hearing, the Commission will approve the application if it finds, based upon all the information available to it, that the extension of unlisted trading privileges pursuant to such application is consistent with the maintenance of fair and orderly markets and the protection of investors.

For the Commission, by the Division of Market Regulation, pursuant to delegated authority.

George A. Fitzsimmons,

Secretary.

[FR Doc. 80-37023 Filed 11-26-80; 8:45 am]

BILLING CODE 8010-01-M

SELECTIVE SERVICE SYSTEM

Schedule for Awarding Senior Executive Service Bonuses

AGENCY: Selective Service System.

ACTION: Senior Executive Service (SES); schedule for awarding performance bonuses to SES career executives.

SUMMARY: As required by the Office of Personnel Management in a memorandum signed by the Director on July 21, 1980, the Selective Service System announces that Senior Executive Service bonus payments to SSS career executives will be paid on or after December 10, 1980.

DATE: November 21, 1980.

FOR FURTHER INFORMATION CONTACT: Margaret E. Kimbros, Personnel Officer, Selective Service System, Washington, D.C. 20435, (202) 724-0846.

James G. Bond,

Deputy Director.

November 24, 1980.

[FR Doc. 80-36959 Filed 11-26-80; 8:45 am]

BILLING CODE 8015-01-M

SMALL BUSINESS ADMINISTRATION

DJS Capital Group; Application for a License To Operate as a Small Business Investment Company

[License No. 02/02-0410]

Notice is hereby given of the filing of an application with the Small Business Administration (SBA) pursuant to § 107.102 of the regulations governing small business investment companies (13 CFR 107.102(1980)), by DJS Capital Group (Applicant), 1230 Avenue of the Americas, Suite 800 East, New York, New York 10020, for a license to operate as a limited partnership small business investment company (SBIC) under the provisions of the Small Business Investment Act of 1958, as amended (the Act) (15 U.S.C. 661 et seq.), and the Rules and Regulations promulgated thereunder.

The information and licensing of a limited partnership SBIC is subject to the provisions of Section 107.4 of the Regulations. The application provides for an individual general partner and a corporate general partner which must be a corporation, organized under State law solely for the purpose of managing the functions and activities of the limited partnership SBIC. There may be any number of limited partners.

The initial investors and their percent of ownership of the Applicant are as follows:

DJS Capital Corporation, General Partner, 1%
David J. Stone, Invidividual General Partner, 1%
Sarah G. Davidson, Limited Partner

The Applicant proposes to commence operations with a maximum partnership capital of $8,928,572 and a minimum of $2,806,123. The Applicant anticipates it will primarily provide venture capital in the form of equity financing and long-term debt. It will have a broad financing policy. The Applicant intends to provide advisory and management services on a contractual basis to client small concerns.

The corporate general partner (DJS Capital Corporation) will consist of the following officers, directors and shareholders:

David J. Stone, 1049 Park Avenue, New York, New York 10028 (President, 40%)
Robert A. Katz, 200 E. 58th Street, New York, New York 10022 (Chairman, 40%)
Sarah G. Davidson, 1049 Park Avenue, New York, New York 10028 (Vice President, 20%)
William M. Ginn, 265 E. 66th Street, New York, New York 20021 (Vice President, Secretary)
Ralph J. Nagan, 1230 Avenue of the Americas, New York, New York 10020 (Vice President)

There will be only one class of common stock with the initial paid-in capital and paid-in surplus being $1,000 of which $500 will be contributed to the capital of the partnership for a general partners interest in the partnership. David J. Stone is the individual general partner.

Matters involved in SBA's consideration of the application include the general business reputation and character of the proposed officers, directors, and shareholders of the corporate general partner, as well as the limited partners of the Applicant, and probability of successful operation of the Applicant, in accordance with the Act and Regulations.

Notice is further given that any person may, not later than 15 days from the date of publication of this notice, submit to SBA, in writing, comments on the proposed licensing of this company. Any such communication should be addressed to: Associate Administrator for Investment, Small Business Administration, 1441 L Street, N.W., Washington, D.C. 20416.

A copy of this notice shall be published by the Applicant in a newspaper of general circulation in New York, New York.

(Catalog of Federal Domestic Assistance Program No. 59.011, Small Business Investment Companies)

Dated: November 19, 1980.

Michael K. Casey,

Associate Administrator for Investment.

[FR Doc. 80-37073 Filed 11-26-80; 8:45 am]

BILLING CODE 8025-01-M

Office of the Chief Counsel for Advocacy; Meeting

Pursuant to statutory authority set forth in Section 634d of Title 15, United States Code, the Chief Counsel for Advocacy of the Small business Administration, Milton D. Stewart, Esquire, with the approval of the Administrator, A. Vernon Weaver, and the assistance of a Special Task Group of small business people, will conduct a public meeting in Washington, D.C., on December 16, 1980, on the subject of "Small Business Continuity." The meeting will convene in the Conference Center of One Washington Circle Hotel, #One Washington Circle, N.W., at 9:00 AM (EDT).

The Office of the Chief Counsel for Advocacy will continue its study of the question of what changes are needed in laws, regulations or institutions in order to enhance the financing of a change of ownership on the exit or retirement of owners, or the death or disability of founders or family members.

The meeting is open to the public. Any member of the public may participate as an "Observer" and may submit written comments to the Office of the Chief Counsel for Advocacy before, during or after the meeting. All communications or inquiries regarding the meeting should be addressed to: Tim C. Ford, Esq., Office of the Chief Counsel for Advocacy, U.S. Small Business Administration, 1441 L Street, N.W., Room 219, Washington, D.C. 20416, (202) 653-6076.

Dated: November 21, 1980.

Milton D. Stewart,

Chief Counsel for Advocacy.

[FR Doc. 80-37074 Filed 11-26-80; 8:45 am]

BILLING CODE 8025-01-M

[License No. 04/04-0146]

Peachtree Capital Corp.; Issuance of License

On September 9, 1980, a Notice was published in the Federal Register (45 FR 59466) stating that an application had been filed by Peachtree Capital Corporation, 1611 Gas Light Tower, 235 Peachtree Street, Atlanta, Georgia 30303, with the Small Business Administration pursuant to § 107.102 of the Regulations governing small business investment companies (SBICs).

Interested parties were given until the close of business September 24, 1980, to submit their comments to SBA. No comments were received.

Notice is thereby given that, pursuant to Section 301(c) of the Small Business Investment Act of 1958, as amended, after having considered the application and all other pertinent information, the SBA issued License No. 04/04-0146 to Peachtree Capital Corporation, to operate as an SBIC.

(Catalog of Federal Domestic Assistance Program No. 59.011, Small Business Investment Companies)

Dated: November 19, 1980.

Peter F. McNeish,

Acting Associate Administrator for Investment.

[FR Doc. 80-37072 Filed 11-26-80; 8:45 am]

BILLING CODE 8025-01-M

[Declaration of Disaster Loan Area No. 1951]

Texas; Declaration of Disaster Loan Area

Jefferson, Kimble, Llano and Menard Counties and adjacent counties within the State of Texas constitute a disaster as a result of damage caused by tropical storm Danielle which occurred on September 5-9, 1980. Eligible persons,

firms and organizations may file applications for loans for physical damage until the close of business on January 19, 1981, and for economic injury until the close of business on August 18, 1981, at: Small Business Administration, District Office, One Allen Center—Suite 705, 500 Dallas, Houston, Texas 77002, or Small Business Administration, District Office, 727 East Durango—Room A513, Federal Building, San Antonio, Texas 78206, or other locally announced locations.

(Catalog of Federal Domestic Assistance Program Nos. 59002 and 59008)

Dated: November 18, 1980.

A. Vernon Weaver,

Administrator.

[FR Doc. 80-37075 Filed 11-26-80; 8:45 am]

BILLING CODE 6025-01-M

[Declaration of Disaster Loan Area No. 1900; Amendment No. 2]

Texas; Declaration of Disaster Loan Area

The above numbered Declaration (See 45 FR 56488) and Amendment No. 1 (See 45 FR 62599) are amended by adding the following counties:

County	Natural disaster(s)	Date(s)
Cooke	Drought	4/1-8/21/80
Floyd	Drought	6/3-8/27/80

and adjacent counties within the State of Texas as a result of natural disaster as indicated. All other information remains the same; i.e., the termination date for filing applications for physical damage is close of business on February 12, 1981, and for economic injury until close of business on May 12, 1981.

(Catalog of Federal Domestic Assistance Program Nos. 59002 and 59008)

Dated: September 23, 1980.

A. Vernon Weaver,

Administrator.

[FR Doc. 80-37076 Filed 11-26-80; 8:45 am]

BILLING CODE 6025-01-M

[Declaration of Disaster Loan Area No. 1904; Amendment No. 2]

West Virginia; Declaration of Disaster Loan Area

The above numbered Declaration (See FR 45 58458) and amendment No. 1 (See FR 62600) are amended in accordance with the President's declaration of August 15, 1980, to include Raleigh County and Adjacent counties within the State of West Virginia. All other information remains the same; i.e., the termination dates for filing applications for physical damage is close of business on October 16, 1980, and for economic injury until the close of business on May 15, 1981.

(Catalog of Federal Domestic Assistance Program Nos. 59002 and 59008)

Dated: September 8, 1980.

A. Vernon Weaver,

Administrator.

[FR Doc. 80-37071 Filed 11-26-80; 8:45 am]

BILLING CODE 6025-01-M

DEPARTMENT OF TRANSPORTATION

Federal Aviation Administration

FAA Consumer Program as Required by Executive Order 12160

Correction

In FR Doc. 80-36195 appearing at page F6829 in the issue for Thursday, November 20, 1980, make the following correction:

On page F6830, in the first column, in the next to last paragraph, the last sentence should read: * * * The FAA has no intention of permitting the Community and Consumer Liaison Division to serve as either a "buffer" or "barrier" between its specialists and interested members of the public; rather, the Division will strive to expedite interaction between members of the public and agency personnel, to facilitate—and not impede—consumer participation in the development of FAA rules, policies and programs.

BILLING CODE 1505-01-M

Federal Highway Administration

[FHWA Docket No. 80-26]

Interstate Motor Carrier Study: Request for Comments

AGENCY: Federal Highway Administration (FHWA), DOT.

ACTION: Notice of docket number assignment and date for comments.

SUMMARY: Section 19 of the Motor Carrier Act of 1980 directs the Secretary of Transportation and the Interstate Commerce Commission to conduct a study of the individual State regulations and requirements imposed on interstate motor carriers. Comments on the study were solicited by a notice published in FR Doc. 80-31351, in the issue of Thursday, October 9, 1980, at 45 FR 67272. This notice establishes a docket number and a closing date for submission of written comments.

DATE: Comments must be received on or before May 1, 1981.

ADDRESS: Submit written comments, preferably in triplicate, to FHWA Docket No. 80-26, Room 4205, HCC-10, Federal Highway Administration, 400 Seventh Street, SW., Washington, D.C. 20590. All comments received will be available for examination at the above address between 7:45 a.m. and 4:15 p.m., ET, Monday through Friday. Those desiring notification of receipt of comments must include a self-addressed, stamped postcard.

FOR FURTHER INFORMATION CONTACT: Mr. James R. Link, Chief, Intermodal Studies Team, 202-426-0570; or Mrs. Kathleen S. Markman, Trial Attorney, Office of the Chief Counsel, 202-426-0346, Federal Highway Administration, 400 Seventh Street, SW., Washington, D.C. 20590. Office hours are from 7:45 a.m. to 4:15 p.m., ET, Monday through Friday.

Issued on: November 21, 1980.

John S. Hassell, Jr.,

Federal Highway Administrator.

[FR Doc. 80-37088 Filed 11-26-80; 8:45 am]

BILLING CODE 4910-22-M

National Highway Traffic Safety Administration

[Docket No. IP79-8; Notice 2]

General Motors Corp.; Grant of Petition for Inconsequential Noncompliance

This notice grants the petition by General Motors of Detroit, Michigan, ("GM" herein) to be exempted from the notification and remedy requirements of the National Traffic and Motor Vehicle Safety Act for two noncompliances with 49 CFR 571.105, Motor Vehicle Safety Standard No. 105, *Hydraulic Brake Systems.* The basis of the grant is that the noncompliances are inconsequential as they relate to motor vehicle safety.

Notice of receipt of the petition was published in the Federal Register on August 27, 1979, and an opportunity afforded for comment (44 FR 50126).

Paragraph S5.3.5 of Standard No. 105 requires school buses to be equipped with a brake system indicator lamp, whose lens is labeled "Brake". If a separate indicator lamp is used to indicate a gross loss of brake pressure it shall include additional appropriate labeling, i.e., "Brake Pressure". GM discovered that the separate indicator for this function was labeled "Brake" on 4,250 GMC and Chevrolet school bus chassis manufactured between the start of 1979 model production and April 1979.

Paragraph S5.3.2 of Standard No. 105 requires that all brake system indicator lamps shall be activated as a check of

lamp function when the ignition switch is turned to the "on" position and the engine is not running. GM said that this will not occur in the "Park Brake" indicator unless the parking brake is also applied.

GM's arguments that these noncompliances are inconsequential as they relate to motor vehicle safety may be summarized as follows: The indicator labeled "Brake" is the only indicator that identifies brake system hydraulic failure, and "this wording conveys the same information as the words 'Brake Pressure' specified by the Standard, which is that a problem may exist in the service brake hydraulic system." with respect to the check function of the "Park Brake" indicator, the operator's manual accompanying each vehicle advises that the driver apply the parking brake before the engine is started. GM further stated that the system was designed to illuminate whenever the ignition switch is turned on and the parking hand brake is applied. If these directions are followed, the indicator will illuminate as a check function, and, in any event, may be checked by application of the parking brake.

No comments were received on the petition.

With respect to the failure to provide the word "Pressure" after "Brake", NHTSA has concluded that the use of two warning indicators serves to meet the intent of the requirement. Separation of the brake subsystems means that failure in the hydraulic brake system will be adequately indicated by the lens marked simply "brake".

As for the failure of the parking brake indicator to light unless the brake is applied, the agency has determined that the distinction between usage of school buses and passenger cars renders this noncompliance inconsequential in nature. Laws in many jurisdictions require the driver to go through a check list of vehicle functions each day before the vehicle is operated, a constraint that is lacking in passenger car operation. Therefore, the parking brake system will be checked by a trained driver on a frequent if not daily basis. To remind vehicle operators of the necessity of this check, GM has informed the agency that it send a letter to school bus owners asking them to review their procedures.

For the foregoing reasons, it is hereby found that petitioner has met its burden of persuasion, and that the noncompliances herein described are inconsequential as they relate to motor vehicle safety.

(Sec. 102, Pub. L. 93-492, 88 Stat. 1470 (15 U.S.C. 1417); delegations of authority at 49 CFR 1.50 and 49 CFR 501.8)

Issued on November 19, 1980.

Michael M. Finkelstein,

Associate Administrator for Rulemaking.

[FR Doc. 80-36491 Filed 11-26-80; 8:45 am]

BILLING CODE 4910-59-M

[Docket No. IP80-3; Notice 2]

Volkswagen of America; Denial of Petition for Inconsequential Noncompliance

This notice denies the petition by Volkswagen of America, Inc., of Warren, Michigan, to be exempted from the notification and remedy requirements of the National Traffic and Motor Vehicle Safety Act (15 U.S.C. 1381 et seq.) for an apparent noncompliance with 49 CFR 571.205, Motor Vehicle Safety Standard No. 205, *Glazing Materials.* Volkswagen petitioned on the basis that the noncompliance was inconsequential as it related to motor vehicle safety.

Notice of receipt of the petition was published on March 10 1980 (45 FR 15300).

Paragraph S6.4 of Standard No. 205 requires that each manufacturer who cuts a section of glazing material for use in a motor vehicle shall mark the material to identify it. Volkswagen imported 505 replacement windshields in 1977, 1978, and 1979 for its Thing, an unknown number of which (but not more than 398) were not marked AS-1 in accordance with the standard. Volkswagen argued that the noncompliance was inconsequential as the windshields were certified as meeting Standard No. 205, and in fact, other than the omitted marking, complied with all requirements.

Two comments were received on the petition, both from States, and both opposing it for virtually the same reason. The Maryland State Police (Automotive Safety Enforcement Division) pointed out that Things with unmarked windshields would not comply with State inspection requirements and would be rejected. The Department of California Highway Patrol commented that the lack of marking is not inconsequential to a vehicle owner who must replace the windshield in the aftermath of an unsuccessful inspection.

The agency has decided to deny the petition. None of the previous inconsequentiality petitions concerning the failure to mark glazing (See Dockets IP76-10, 77-7, 77-16, 78-5, and 79-7) involved a failure to mark AS-1 glazing with the AS-1 designation. The question whether a noncompliance is "inconsequential as it relates to safety" may be answered in a broader context than that of whether all performance requirements are met. While a "Thing" with an unmarked replacement windshield may comply with the essentials of Standard No. 205, it is still subject to rejection by State inspectors, putting the owner to the burden of either contacting Volkswagen (whose mistake it is) or of replacing the windshield, before the State will again inspect the vehicle and authorize its continued operation on the roads. The noncompliance has a direct impact upon the vehicle safety inspection process, diverting public resources with no corresponding beneficial safety result. Accordingly, petitioner has not met its burden of persuasion that the noncompliance described herein is inconsequential as it relates to motor vehicle safety and its petition is hereby denied.

The engineer and attorney primarily responsible for this notice are Ed Jettner and Taylor Vinson respectively.

(Sec. 102, Pub. L. 93-492, 88 Stat. 1470 (15 U.S.C. 1417); delegations of authority at 49 CFR 1.50 and 49 CFR 501.8)

Issued on November 19, 1980.

Michael M. Finkelstein,

Associate Administrator for Rulemaking.

[FR Doc. 80-36490 Filed 11-26-80; 8:45 am]

BILLING CODE 4910-59-M

[Docket No. IP80-10; Notice 2]

White Motor Corp; Grant of Petition for Inconsequential Noncompliance

This notice grants the petition by White Motor Corp. of Eastlake, Ohio, to be exempted from the notification and remedy requirements of the National Traffic and Motor Vehicle Safety Act (15 U.S.C. 1381 *et seq.*) for a noncompliance with 49 CFR 571.101, Motor Vehicle Safety Standard No. 101, *Control Location, Identification, and Illumination.* The basis of the petition was that the noncompliance was inconsequential as it related to motor vehicle safety.

Notice of receipt of the petition was published on July 17, 1980, and an opportunity afforded for comment (45 FR 48016).

Table 1 of Standard No. 101 requires that a combination identification lamp, clearance lamp, side marker lamp control be identified as either "CL LPS" or "Clearance Lamps." White used the term "Marker Lgts" on 221 trucks manufactured between July 31, 1976, and October 29, 1979. The company stated that it had no owner complaints about the noncompliance. It believed that the limited number of vehicles and "readily apparent meaning of the switch

identifier" have an inconsequential effect on safety.

Two comments were received on the petition, both of which supported it, observing that truck and lighting industries have traditionally used the terms "clearance" and "marker" interchangeably.

The NHTSA considers these comments to have considerable merit. They indicate that those who operate the trucks in question are not likely to be confused in use of the lamp control. Accordingly, petitioner has met its burden of persuasion that the noncompliance herein described is inconsequential as it relates to motor vehicle safety, and its petition is hereby granted.

The engineer and attorney responsible for this notice are John Carson and Taylor Vinson, respectively.

(Sec. 102, Pub. L. 93-492, 88 Stat. 1470 (15 U.S.C. 1417); delegations of authority at 49 CFR 1.50 and 49 CFR 501.8)

Issued on November 17, 1980.

Michael M. Finkelstein,

Associate Administrator for Rulemaking.

[FR Doc. 80-36660 Filed 11-26-80; 8:45 am]

BILLING CODE 4910-59-M

Office of the Secretary

[Docket No. 69; Notice No. 80-14a]

Implementation of Special Federal Aviation Regulation No. 43; Temporary Allocation of IFR Reservations at Washington National Airport

AGENCY: Department of Transportation/ Office of the Secretary.

ACTION: Notice and Request for Comments.

SUMMARY: Special Federal Aviation Regulation No. 43 (45 FR 72637, November 3, 1980) established a procedure for the temporary allocation of Instrument Flight Rules (IFR) reservations or "slots" for operations (takeoffs and landings) of air carriers except air taxis at Washington National Airport, a "high density" airport under 14 CFR Part 93, Subpart K. This notice implements paragraph (g) of the Appendix to the special regulation by publishing two tables setting forth the assignment of slots that resulted from the procedures carried out under SFAR 43, and discusses certain comments on, and requests for, amendments to the special regulation that have been received by the Department.

FOR FURTHER INFORMATION CONTACT:

Gregory Wolfe, Office of the Assistant General Counsel for Environmental, Civil Rights and General Law, Department of Transportation, Washington, D.C. 20590, Telephone No. 202-426-4710, or

Rick Yates, Office of Industry Policy, Industry Operations Division, Department of Transportation, Washington, D.C. 20590, Telephone No. 202-426-4203.

SUPPLEMENTARY INFORMATION:

Slot Allocation Procedure

Pursuant to Special Federal Aviation Regulation No. 43, the Department requested that the Airline Scheduling Committee, which consists of representatives of the airline companies serving or proposing to serve Washington National Airport, assemble to participate in a regulatory procedure that would result in a distribution of slots among the Committee members for the period between December 1, 1980, and April 26, 1981. An open meeting was held for this purpose at the Sheraton National Inn in Arlington, Virginia, on November 3, 1,980. All carriers affected by the regulation were represented, and all participated in the procedure, although most expressed reservations with it, indicating that they reserved the right to challenge the regulation in court. The procedure was conducted by attorneys from the Office of the General Counsel, Department of Transportation, because members of the Scheduling Committee considered it inappropriate for the Committee staff to do so.

Paragraphs (f), (g) and (h) of Appendix A of the special regulation provide:

(f) Subject to CAB authorization, the carriers may then exchange slots in any hour.

(g) The Department shall then issue and publish a final schedule in the Federal Register. Thereafter, existing procedures (or any new procedure approved by the CAB) of the scheduling committee for the relinquishment and reassignment of unused slots may be employed.

(h) The FAA will accept at any time a schedule developed by the committee in accordance with its rules for part or all of the scheduling period, in lieu of the schedule published under paragraph (g) of this Appendix.

After the SFAR 43 distribution had been completed, the carriers, in accordance with paragraph (f), reassembled the Scheduling Committee and agreed to modifications of the schedule of slot assignments developed under the regulation. Because one of the carriers will not begin service at National Airport until December 14, the Committee split the schedule into two separate time periods, one from December 1 through December 13, the second from December 14 through the end of the season (April 26, 1981). In accordance with paragraph (g) of the regulation, tables showing the distribution of slots during these two periods are published below.

Further Comments and Submissions to the Rulemaking Docket

Released Slots

Docket No. 69 has remained open for further comments with respect to amendments or additions to the special regulation that commenters believe should be made. Following an initial proposal on the matter by Eastern Airlines, several carriers have urged that the rule be amended to provide for the distribution of slots that carriers are unable or decide not to use for part or all of the scheduling period. SFAR 43 provides that the normal procedures of the Airline Scheduling Committee should be applied for the reassignment of unused slots after the completion of the SFAR 43 procedure. Committee practices are to notify the member carriers of any such available slots, and to resolve multiple requests for their use informally.

Several carriers urged that the regulation establish a ranking of carriers, on one basis or another, in which individual carriers would be offered unused slots. Eastern Airlines proposed that carriers receiving fewer slots under the December allocation than under the November schedule be given priority, followed by carriers that were required to "slide" a slot into the ten p.m. hour. Eastern also urged that it be given first priority, since it gave up the most slots. Eastern was supported by Piedmont. Pan American also urged giving the five carriers losing slots priority, but suggested that the priority among the five be determined by lot.

Two carriers, Air Florida and Altair, argued that the carriers losing slots had done so because of their own voluntary action in the October 8 vote in the scheduling committee, which was used as a basis for establishing the total number of slots assigned to each carrier under SFAR 43. These carriers urged that the released slots be made available to the carriers obliged to "slide" in the order of the number of total slots each holds, with the carrier with the least number of slots being given the first chance to take an unused slot. They argued that the "slides" had at least as severe an impact on the smaller carriers as losing slots did on the large carriers, and that the burden was especially disproportionate because they already held one or more slots at the less desireable ten p.m. hour. New

York Air, however, argued that any such priority system violated the Airline Deregulation Act, and that new carriers should be given the first opportunity to select the unused slots. The other methods proposed, it contended, would constitute "grandfathering," would be anticompetitive, and would set a bad precedent.

In addition, Eastern urged that the regulation require the relinquishment of slots by carriers unable to use them within a specified time period. This comment was apparently occasioned by the status of New York Air. That carrier, which intends to begin service December 14, has not yet obtained all necessary governmental approvals and for that and other reasons may not be able to commence service on the intended date.

The Department did not find in any of the comments submitted an explanation why the scheduling committee's existing procedures could not be used to distribute unused slots appropriately. The committee in fact has already reassigned slots without serious difficulty. Without any evidence of pressing need, there is no reason to establish an additional regulatory procedure.

With respect to the need to require carriers to release unused slots, the Department concludes that such a regulation is impracticable. It is virtually impossible to establish a date certain on which a carrier knows it will not use a slot or slots, and therefore impossible to enforce a temporary rule requiring the release of unused slots. Moreover, it does not appear to be necessary. Should any carriers, inappropriately hold on to unused slots, the Civil Aeronautics Board has indicated that it will consider taking action.

Effective Dates

At the meeting called to implement SFAR 43, several participants expressed concern about the Department's decision to keep the regulatory docket open and its expressed willingness to make appropriate changes to the regulation as early as January 5, 1981. They argued that the adjustments to the November schedule resulting from the regulatory procedure had caused many carriers to make extensive changes to their systemwide schedules, and objected to being compelled to undertake such changes again, before the end of the scheduling period in April.

While it remains open to further suggestions for improvements to the special regulation, the Department does not intend to initiate another major reallocation of slots at National to take effect before April 26. The airline scheduling committee, however, retains the ability to submit a new schedule at any time in accordance with its established procedures and SFAR 43

Invitation for Additional Comment

As indicated in the preamble to the special regulation, the docket for Notice No. 80-14 will remain open until a decision is made with respect to a long-term solution to slot allocation methods at Washington National Airport, or April 26, whichever occurs first. All comments submitted will be available in the rules docket for examination by interested persons. All comments submitted will be considered by the Department in making changes to the special regulation, if warranted.

Communications should identify the docket number and be submitted in duplicate to the Docket Clerk, Office of the Secretary, Docket No. 69; Notice No. 80-14, Office of the General Counsel, Department of Transportation, Washington, D.C. 20590, or be delivered in duplicate to Room 10421, 400 Seventh Street, SW., Washington, D.C. 20590. Comments delivered must be marked: Docket No. 69. Comments may be inspected at Room 10421 between 9:00 a.m. and 5:30 p.m.

Commenters who want the Department to acknowledge receipt of their comments must submit with those comments a self-addressed, stamped postcard on which the following statement is made: "Comments on Docket No. 69." The postcard will be dated, time stamped, and returned to the commenter.

Distribution of Slots Under Special Federal Aviation Regulation Number 43

The following distributions of slots to air carriers have been made pursuant to Appendix A of Special Federal Aviation Regulation No. 43 for the period December 1, 1980 through April 26, 1981:

BILLING CODE 4910-62-M

AIR CARRIER IFR RESERVATIONS
AT WASHINGTON NATIONAL AIRPORT
December 1 through December 13, 1980

CARRIER	07	08	09	10	11	12	13	14	15	16	17	18	19	20	21	22	TTL	
American	5	3	4	4	3	6	2	4	4	2	4	4	5	3	3	2	58	AA
Altair	2		1		2	2				2		1	1		2	3	16	AK
USAir	7	7	6	3	5	3	6	7	5	4	6	5	5	6	5	4	84	AL
Braniff	1	1		1	1		2	2	3	1	2		2	2	2		20	BN
Delta	3	2	2	2	2	2	3	2	1	3	3	2	1	1	2	1	32	DL
Eastern	9	7	7	12	8	7	8	9	9	7	5	8	8	7	12	5	128	EA
Aeromech		1	1			1	1						2				6	KC
Midway	1				1	1		1	1		1	1			1		8	ML
New Air		2					1	1			1	1					6	NC
Air North		2									1	1					4	NO
Northwest	3	2	3	2	2	4	3	1	4	3	2	2	2	5	1	1	40	NW
Ozark					1	1				1	1						4	OZ
Pan American	2	2	3	3	1	1	4	2	1	2	3	4	2	1	2	3	36	PA
Piedmont	1	4	6	5	2	5	4	5	2	4	4	4	4	4	3	5	62	PI
Pilgrim		2								1	1						4	PM
Air Florida	1	1	1		1	1	1	1	1	1		1	1		1	2	14	QH
Republic					1	1								2			4	RC
Texas Int'l																		TI
Trans World	1	2	3	2	1	3	3	2	5	3	3	2	2	3	2	1	38	TW
United	4	1	2	2	4	2	1	2	3	3	2	4	2	4	3	3	42	UA
Empire		1	1				1		1				2	1		1	8	UR
Mid South				2	2					2			1			1	8	VL
Western					1					1	1				1		4	WA
TOTAL	40	40	40	38	38	40	40	39	40	40	40	40	40	39	40	32	626	
	07	08	09	10	11	12	13	14	15	16	17	18	19	20	21	22	TTL	

AIR CARRIER IFR RESERVATIONS
AT WASHINGTON NATIONAL AIRPORT
December 14, 1980 to April 26, 1981

CARRIER	07	08	09	10	11	12	13	14	15	16	17	18	19	20	21	22	TTL	
American	4	2	5	5	4	5	2	4	3	2	4	4	5	3	3	3	58	AA
Altair	2		1		1	3				2		1	1		2	3	16	AK
USAir	7	7	5	4	5	2	6	6	5	4	5	5	5	6	5	5	82	AL
Braniff	1	1		1	1	1	1	2	3	1	2		1	2	2	1	20	BN
Delta	3	2	2	2	2	2	3	2	1	3	3	2	1	1	2	1	32	DL
Eastern	9	7	6	11	9	6	8	9	8	8	5	8	8	6	11	5	124	EA
Aeromech		1	1				1	1					2				6	KC
Midway	1				1	1		1	1		1	1		1			8	ML
New Air		2					1	1			1	1					6	NC
Air North		2									1	1					4	NO
Northwest	3	2	3	2	2	4	3	1	4	2	2	2	2	5	1	2	40	NW
Ozark					1	1				1	1						4	OZ
Pan American	2	2	3	3	1	1	4	2	1	2	3	4	2	1	2	3	36	PA
Piedmont	1	4	6	5	2	5	4	5	3	3	4	4	4	4	3	5	62	PI
Pilgrim		2								1	1						4	PM
Air Florida	1	1	1		1	1	1	1	1	1		1	1		1	2	14	QH
Republic					1	1								2			4	RC
Texas Int'l	1	1	2	1	1	2	1	1	1	1	1	1	1	1	1	1	18	TI
Trans World	1	2	3	2	1	3	3	2	5	3	3	1	2	3	2	2	38	TW
United	4	1	1	2	4	2	1	2	3	3	2	4	2	4	3	2	40	UA
Empire		1	1				1		1				2	1		1	8	UR
Mid South				2	2					2			1			1	8	VL
Western					1					1	1				1		4	WA
TOTAL	40	40	40	40	40	40	40	40	40	40	40	40	40	40	39	37	636	
	07	08	09	10	11	12	13	14	15	16	17	18	19	20	21	22	TTL	

BILLING CODE 4910-62-C

(Secs. 103, 307(a) and (c), 313(a) of the Federal Aviation Act of 1958, as amended (49 U.S.C. section 1303, 1348 (a) and (c), and 1354(a)); Secs. 4 and 6 of the Department of Transportation Act (49 U.S.C. 1653 and 1655); Sec. 2, Act for the Administration of Washington National Airport (54 Stat. 688))

Issued at Washington, D.C. on November 19, 1980.

Neil Goldschmidt,

Secretary of Transportation.

[FR Doc. 80-36738 Filed 11-20-80; 4:50 pm]

BILLING CODE 4910-62-M

Urban Mass Transportation Administration

Southwest Corridor; Intent To Prepare an Environmental Impact Statement

In accordance with the provisions of the National Environmental Policy Act (83 Stat. 852), the Council on Environmental Quality's implementing regulations (40 CFR Parts 1500–1508) and the Urban Mass Transportation Administration and Federal Highway Administration Environmental Impact and Related Procedures (published in the Federal Register on October 30, 1980), the Urban Mass Transportation Administration hereby gives notice that an analysis of transportation alternatives in the Southwest corridor and preparation of related draft environmental impact statement are to begin following a public meeting at which the scope and conduct of the analysis will be discussed. Members of the public and interested Federal, State and local agencies are invited to comment on the proposed scope of work, the alternatives to be studied and the evaluation criteria which should be used to arrive at a decision. This Scoping Meeting will be held at the Dudley Branch of the Boston Public Library, 65 Warren Street, Roxbury, Massachusetts, on Thursday, December 11, 1980, from 5:00 to 7:30 p.m.

The Urban Mass Transportation Administration's *Policy on Major Urban Mass Transportation Investments* requires a metropolitan area planning organization to undertake such an analysis of alternatives if the area is contemplating seeking Federal funding for a major investment. The Policy defines a major investment as any new or extended fixed guideway transit facility. To be eligible for Federal funding, the analysis must be conducted, but completion of the analysis does not ensure that Federal funding will be forthcoming. The subject analysis will be conducted by the Massachusetts Bay Transportation Authority in the Boston area, under the supervision of the Urban Mass Transportation Administration. Consultant support will be provided by Tippetts-Abbett-McCarthy-Stratton (TAMS) and its sub-consultants.

The Boston Southwest (Orange Line Replacement) Corridor is a six-mile north-south corridor running southwest of the Boston Central Business District (CBD). Its boundaries are the Main Line Railroad proposed right-of-way for the relocated Orange Line rapid transit, on the west; the Red Line rapid transit alignment on the east; the Mattapan High Speed Trolley Line on the south; and the Massachusetts Turnpike extension (I-90) on the north. The study area encompasses six basic planning districts in the city of Boston including the South End, Dorchester-Uphams Corner, Roxbury, Dorchester-Fields Corner, Mattapan, and Franklin Field. Over 215,000 residents and 53,100 jobs are located in the study area. Retail establishments, utility corporations, educational facilities and medical facilities constitute the major activity centers. The existing transportation system includes the Washington Street Elevated Orange Line which will be relocated shortly; Red Line rapid transit Ashmont Branch; Mattapan High Speed Trolley; Massachusetts Turnpike Extension (I-90); South East Expressway (I-93); numerous major arterials including Blue Hills Avenue, Washington Street and Massachusetts Avenue; the Crosstown Arterial Street; and commuter rail service temporarily running on the Dorchester Branch of the Mainline Railroad. The relocation of the Orange Line service is the major reason for this analysis of replacement service.

The alternatives proposed for consideration and analysis for this corridor include busways on major alignments with associated in-street feeder bus network, and light rail from new Ruggles Station through Dudley to Columbia Point with busways on all other major alignments and associated in-street feeder bus network. The Base Case is the relocated Orange Line with existing on-street feeder bus network shifted to serve new station locations

The proposed evaluation criteria will include transportation service; ridership; urban development; environmental, social, economic and financial impact areas as required by current Federal (NEPA) and State (MEPA) environmental laws and current Federal CEQ, UMTA and FHWA guidelines. Additional impact areas and measures important to local decision-making will also be included.

At the Scoping Meeting, staff will present the above information in more detail using maps and visual aids, as well as a plan for active citizen participation program and work schedule. The public and affected public agencies will be invited to comment, either orally at the meeting or in writing for a period of 30 days following the meeting. At that time, adjustments to the work scope and alternatives will be made.

Interested parties can obtain copies of background material at the MBTA, Southwest Corridor Project Office, 4th Floor, 131 Clarendon Street, Boston, Massachusets 02116 or at the Greater Roxbury Development Corporation, 90 Warren Street, Roxbury, Massachusettss 02119 from 10:00 a.m. to 4:00 p.m. or by calling (617) 427-7060.

If there are any questions, please contact the UMTA Project Manager, Mr. Edward L. Thomas, Office of Planning, Urban Masss Transportation Administration, 400 7th Street, S.W., Washington, DC 20590, Telephone (202) 426-2360 or the UMTA Regional Office Planning Representative, Mr. Donald Bell, 55 Broadway (TSC), Cambridge, Massachusetts 02142, telephone (617) 494-2729, or the Local Agency Project Manager, Mr. Peter C. Calcaterra, Massachusetts Bay Transportation Authority, Southwest Corridor Development Project, 131 Clarendon Street, 4th Floor, Boston, Massachusetts, 02116, telephone (617) 722-5834.

Dated: November 21, 1980.

Robert H. McManus,

Associate Adminstrator for Planning, Management and Demonstrations.

[FR Doc. 80-36993 Filed 11-26-80; 8:45 am]

BILLING CODE 4910-57-M

DEPARTMENT OF THE TREASURY

Customs Service

[521854]

Three-Wheel All-Terrain Vehicles; Change of Practice Considered

AGENCY: U.S. Customs Service, Department of the Treasury.

ACTION: Proposed change of practice.

SUMMARY: This document gives notice that the Customs Service is reviewing a uniform and established practice concerning the classification of three-wheel all-terrain vehicles. The Customs Service currently classifies the subject vehicles under the provision for other motor vehicles (except motorcycles) for the transport of persons or articles in item 692.10, Tariff Schedules of the United States (TSUS). The proposed change of practice would result in the reclassification of these vehicles under the provision for motorcycles in item 692.50, TSUS.

DATES: Comments (perferably in triplicate) must be received on or before: December 29, 1980.

ADDRESS: Comments should be addressed to the Commissioner of Customs, Attention: Regulations and Research Division, 1301 Constitution Avenue, NW., Washington, D.C. 20229.

FOR FURTHER INFORMATION CONTACT: Leonard J. Emmert, Classification and Value Division, U.S. Customs Service, 1301 Constitution Avenue, NW., Washington, D.C. 20229 (202-566-8181).

SUPPLEMENTARY INFORMATION:

Background

In a Headquarters ruling dated July 15, 1970, file No. 005618, a three-wheeled all-terrain vehicle, which resembled a motorcycle with two rear wheels, was held to be classifiable under the provision for other motor vehicles (except motorcycles) for the transport of persons or articles in item 692.10, Tariff Schedules of the United States (TSUS). That ruling was circularized to all ports, and all importations of vehicles of the kind in question have been classified in conformity therewith, resulting in a uniform and established practice within the meaning of 19 U.S.C. 1315(d). The subject vehicles utilize a handlebar for steering and have a seat that is straddled by the driver who is not enclosed in the vehicle. Generally, ballon-type tires permit the vehicles to travel on all types of terrain. In 1978 a ruling was issued, however, indicating that these are motorcycles.

The Customs Service notes that the Brussels Nomenclature, Heading 87.09, Section XVII (1975), indicates that three-wheeled vehicles of the kind in question are classifiable as motorcycles. Further, it is noted that Regulation VESC-11 of the Vehicle Equipment Safety Commission defines a motorcycle as a two wheel or three-wheel vehicle with motive power, a singular front steering road wheel mounted in a fork assembly which passes through a frame steering bearing, and to which is attached a handlebar assembly, and which has no enclosure for the driver with the exception of a windshield, if so equipped.

Proposed Change of Practice

An *eo nomine* provision for an article, such as the provision for motorcycles, without limitations or shown contrary legislative intent, judicial decision, or administrative practice to the contrary, and without proof of commercial desgnation, will include all forms of such article. *Nootka Packing Co.* v. *United States*, 22 C.C.P.A. 464, T.D. 47464 (1935). In view of this principle, and in light of the definitions enunciated above, the Customs Service proposed to change the current uniform and established practice of classifying three-wheeled all-terrain vehicles of the kind in question under item 692.10, TSUS. The Customs Service proposes that the subject vehicles be reclassified as motorcycles under item 692.50, TSUS.

Authority

Inasmuch as the proposed change of practice will affect the assesses duties on the subject vehicles, the Customs Service is giving this notice and opportunity to comment in accordance with section 315(d) of the Tariff Act of 1930, as amended (19 U.S.C. 1315(d)), and section 177.10(c)(1) of the Customs Regulations (19 CFR 177.10(c)(1)).

Consideration will be given to any written comments submitted in writing to the Commissioner of Customs. Comments submitted will be available for public inspection in accordance with section 103.8(b), Customs Regulations (19 CFR 103.8(b)), during regular business hours at the Regulations and Research Division, Headquarters, Room 2426, U.S. Customs Service, 1301 Constitution Avenue, NW., Washington, D.C. 20229.

Drafting Information

The principal author of this notice Harold I. Loring, Regulations and Research Division, U.S. Customs Service. However, personnel from other offices of the U.S. Customs Service participated in developing this notice, both on matters of style and substance.

William T. Archery,
Commissioner of Customs.

Approved: November 17, 1980.

Richard J. Davis,
Assistant Secretary of the Treasury.

[FR Doc. 80-37110 Filed 11-26-80; 8:45 am]
BILLING CODE 5218-54-M

Sunshine Act Meetings

Federal Register
Vol. 45, No. 231
Friday, November 28, 1980

This section of the FEDERAL REGISTER contains notices of meetings published under the "Government in the Sunshine Act" (Pub. L. 94-409) 5 U.S.C. 552b(e)(3).

CONTENTS

	Items
Export-Import Bank	1
Federal Deposit Insurance Corporation	2-4
Federal Election Commission	5
Federal Energy Regulatory Commission	6-9
Federal Reserve System (Board of Governors)	10
International Trade Commission	11
National Mediation Board	12
Occupational Safety and Health Review Commission	13-15
United States Railway Association	16, 17

1

EXPORT-IMPORT BANK.

Pursuant to the provisions of the "Government in the Sunshine Act", 5 U.S.C. 552b, notice is hereby given that the Board of Directors of the Export-Import Bank of the United States will meet in open session on Tuesday, December 16, 1980, at 2 p.m., to consider the Medium-Term Programs of the Bank.

The meeting will be held in room 1143 at 811 Vermont Avenue, N.W., Washington, D.C.

Requests for information concerning this meeting may be directed to Warren W. Glick, General Counsel, telephone 202-566-8334.

Dated: November 24, 1980.

Warren W. Glick,

General Counsel, Export-Import Bank of the United States.

[S-2162-80 Filed 11-24-80; 4:28 pm]

BILLING CODE 6690-01-M

2

FEDERAL DEPOSIT INSURANCE CORPORATION.

Notice of changes in subject matter of agency meeting.

Pursuant to the provisions of subsection (e)(2) of the "Government in the Sunshine Act" (5 U.S.C. 552b(e)(2)), notice is hereby given that at its open meeting held at 2:00 p.m. on Monday, November 24, 1980, the Corporation's Board of Directors determined, on motion of Chairman Irvine H. Sprague, seconded by Director John G. Heimann (Comptroller of the Currency), concurred in by Director William M. Isaac (Appointive), that Corporation business required the addition to the agenda for consideration at the meeting, on less than seven days' notice to the public, of the following matters:

Memorandum and Resolution re: Uniform Interagency Consumer Compliance Rating System.

Memorandum and Resolution re: Procedures for cooperation between the Federal financial institution regulatory agencies and the Department of Labor in the enforcement of the Employee Retirement Income Security Act of 1974 (ERISA).

Memorandum and Resolution re: Survey of overseas fiduciary activities of U.S. banks and bank holding companies.

The Board further determined, by the same majority vote, that no earlier notice of the changes in the subject matter of the meeting was practicable.

Dated: November 24, 1980.

Federal Deposit Insurance Corporation.

Alan J. Kaplan,

Assistant Executive Secretary.

[S-2166-80 Filed 11-25-80; 8:45 am]

BILLING CODE 6714-01-M

3

FEDERAL DEPOSIT INSURANCE CORPORATION.

Notice of agency meeting.

Pursuant to the subsection (e)(2) of the "Government in the Sunshine Act" (5 U.S.C. 552b(e)(2)), notice is hereby given that at 9:00 p.m. on Friday, November 21, 1980, the Board of Directors of the Federal Deposit Insurance Corporation met in closed session, by telephone conference call, to (1) accept sealed bids for the purchase of certain assets of and the assumption of the liability to pay deposits made in Citizens State Bank of Galena, Galena, Kansas, which was closed by the Kansas State Bank Commissioner on November 21, 1980; (2) accept the bid for the transaction submitted by Citizens State Bank in Galena, Galena, Kansas, a newly-chartered State bank; (3) approve a resulting application of Citizens State Bank in Galena for Federal deposit insurance and for consent to purchase certain assets of and assume the liability to pay deposits made in the closed bank; (4) provide such financial assistance, pursuant to section 13(e) of the Federal Deposit Insurance Act (12 U.S.C. 1823(e)), as was necessary to effect the purchase and assumption transaction; and (5) appoint a liquidator for such of the assets of the closed bank as were not purchased by Citizens State Bank in Galena.

In calling the meeting, the Board determined, on motion of Chairman Irvine H. Sprague, seconded by Director William M. Isaac (Appointive), concurred in by Mr. H. Joe Selby, acting in the place and stead of Director John G. Heimann (Comptroller of the Currency), that Corporation business required its consideration of the matters on less than seven days' notice to the public; that no earlier notice of the meeting was practicable; that the public interest did not require consideration of the matters in a meeting open to public observation; and that the matters could be considered in a closed meeting pursuant to subsections (c)(8), (c)(9)(A)(ii), and (c)(9)(B) of the "Government in the Sunshine Act" (5 U.S.C. 552b(c)(8), (c)(9)(A)(ii), and (c)(9)(B)).

Dated: November 24, 1980.

Federal Deposit Insurance Corporation.

Alan J. Kaplan,

Assistant Executive Secretary.

[S-2167-80 Filed 11-25-80; 11:04 am]

BILLING CODE 6714-01-M

4

FEDERAL DEPOSIT INSURANCE CORPORATION.

Notice of changes in subject matter of agency meeting.

Pursuant to the provisions of subsection (e)(2) of the "Government in the Sunshine Act" (5 U.S.C. 552b(e)(2)), notice is hereby given that at its closed meeting held at 2:30 p.m. on Monday, November 24, 1980, the Corporation's Board of Directors determined, on motion of Chairman Irvine H. Sprague, seconded by Director William M. Isaac (Appointive), concurred in by Director John G. Heimann (Comptroller of the Currency), that Corporation business required the withdrawal from the agenda for consideration at the meeting, on less than seven days' notice to the public, of a notice of acquisition of control of Richfield State Bank, Richfield, Wisconsin.

The Board further determined, by the same majority vote, that Corporation business required the addition to the agenda for consideration at the meeting,

on less than seven days' notice to the public, of the following matters:

Application of Plumas Bank, a proposed new bank, to be located at 80 West Main Street, Quincy, California, for Federal deposit insurance.

Application of Suisun Valley Bank, a proposed new bank, to be located at 1000 Texas Street, Fairfield, California, for Federal deposit insurance and for consent to establish a branch at the northwest corner of Travis Boulevard and Oliver Road, Fairfield, California.

Application of The Hibernia Bank, San Francisco, California, an insured State nonmember bank, for consent to merge under its charter and title with Security National Bank, Walnut Creek, California, and for consent to establish the fourteen offices of Security National Bank as branches of the resultant bank.

Application of Bank of Alex Brown, Walnut Grove, California, an insured State nonmember bank, for consent to merge under its charter and title with Placer Bank, Rocklin, California, and for consent to establish the ten full-service offices and one seasonal branch of Placer Bank as branches of the resultant bank.

Application of The Bank of Pasco County, Dade City, Florida, an insured State nonmember bank, for consent to merge under its charter and title with Citizens Bank of Pasco, Zephyrhills, Florida, and for consent to establish the two offices of Citizens Bank of Pasco as branches of the resultant bank.

Application of Westminster Trust Company, Westminster, Maryland, an insured State nonmember bank, for consent to merge, under its charter and with the title Westminster Bank and Trust Company of Carroll County, with The Woodbine National Bank, Woodbine, Maryland, and for consent to establish the three offices of The Woodbine National Bank as branches of the resultant bank.

Application of East River Savings Bank, New York (Manhattan), New York, an insured mutual savings bank, for consent to merge under its charter and title with People's Bank for Savings of New Rochelle, N.Y., New Rochelle, New York, also an insured mutual savings bank, and for consent to establish the four offices of People's Bank for Savings of New Rochelle, N.Y. as branches of the resultant bank.

Application of American Bank and Trust Co. of Pa., Reading, Pennsylvania, an insured State nonmember bank, for consent to merge under its charter and title with The Suburban Bank, East Norriton Township (P.O. Norristown), Pennsylvania, and for consent to establish the sole office of The Suburban Bank as a branch of the resultant bank.

Application of City Bank, Sun City, Arizona, an insured State nonmember bank, for consent to merge, under its charter and with the title City Bank of Arizona, with Surety Savings and Loan Association, Phoenix, Arizona, a Federally-insured, State-chartered stock savings and loan association, for consent to establish the ten existing offices and one approved but unopened office of Surety Savings and Loan Association as branches of the resultant bank, and for consent to redesignate the main office location of the resultant bank to the site of the present main office of Surety Savings and Loan Association.

Application of Continental Illinois National Bank and Trust Company of Chicago, Chicago, Illinois, for consent to purchase the assets and assume the liabilities of Banco Metropolitano de Bayamon, Bayamon, Commonwealth of Puerto Rico, a noninsured financial institution.

Recommendation regarding First Pennsylvania Bank N.A., Bala-Cynwyd, Pennsylvania, and First Pennsylvania Corporation, Philadelphia, Pennsylvania.

Recommendations regarding the liquidation of a bank's assets acquired by the Corporation in its capacity as receiver, liquidator, or liquidating agent of those assets:

Case No. 44,563-L—Banco Credito y Ahorro, Ponceno, Ponce, Puerto Rico.

Case No. 44,566-L—Franklin National Bank, New York, New York.

Memorandum and Resolution re: First Augusta Bank & Trust Company, Augusta, Georgia.

Memorandum and Resolution re: The Hamilton Bank and Trust Company, Atlanta, Georgia.

Memorandum and Resolution re: First State Bank, Foss, Oklahoma.

The Board further determined, by the same majority vote, that no earlier notice of the changes in the subject matter of the meeting was practicable; that the public interest did not require consideration of the matters added to the agenda in a meeting open to public observation; and that the matters added to the agenda could be considered in a closed meeting by authority of subsections (c)(4), (c)(6), (c)(8), (c)(9)(A)(ii), (c)(9)(B), and (c)(10) of the "Government in the Sunshine Act" (5 U.S.C. 552b (c)(4), (c)(6), (c)(8), (c)(9)(A)(ii), (c)(9)(B), and (c)(10)).

Dated: November 24, 1980.

Federal Deposit Insurance Corporation.

Alan J. Kaplan,

Assistant Executive Secretary.

[S-2168 Filed 11-25-80; 11:06 am]

BILLLING CODE 6714-01-M

5

FEDERAL ELECTION COMMISSION.

DATE AND TIME: Tuesday, December 2, 1980 at 10 a.m.

PLACE: 1325 K Street NW., Washington, D.C.

STATUS: This meeting will be closed to the public.

MATTERS TO BE CONSIDERED: Personnel, Compliance, Litigation, Audits.

* * * * *

DATE AND TIME: Wednesday, December 3, 1980 at 10 a.m.

PLACE: 1325 K Street NW., Washington, D.C. (fifth floor).

STATUS: This meeting will be open to the public.

MATTERS TO BE CONSIDERED:

Setting of dates for future meetings.
Correction and approval of minutes.
Certification.
Advisory opinions:
Draft AO 1980-118: Alvin J. Helfgot, Exchange Community Action II PAC.
Draft AO 1980-121: Kendrick G. Kissell, Socialist Party, Socialist National Committee.
Draft AO 1980-127: Edward E. Pollakoff, Associate Counsel, Democratic Party of South Carolina.
Draft AO 1980-129: Chris E. McNeil, Jr., Corporate Secretary, Sealaska Corporation.
Draft AO 1980-130: Lance E. Olson (Fazio for Congress Campaign Committee).
1980 Election and related matters.
Appropriations and budget.
Pending legislation.
Classification actions.
Routine administrative matters.

* * * * *

PERSON TO CONTACT FOR INFORMATION: Mr. Fred Eiland, Public Information Officer; Telephone: 202-523-4065.

Marjorie W. Emmons,

Secretary to the Commission.

[S-2175-80 Filed 11-25-80; 3:40 pm]

BILLING CODE 6715-01-M

6

FEDERAL ENERGY REGULATORY COMMISSION.

Notice of meeting.

November 24, 1980.

TIME AND DATE: 8:45 a.m., November 24, 1980.

PLACE: 825 North Capitol Street, Washington, D.C. 20426.

STATUS: Closed.

MATTERS TO BE CONSIDERED: The agency's participation in a civil action and disposition by the agency of a particular case of formal agency adjudication

CONTACT PERSON FOR MORE INFORMATION: Kenneth F. Plumb, Secretary; telephone (202) 357-8400.

[S-2174-80 Filed 11-25-80; 2:35 pm]

BILLING CODE 6450-85-M

7

FEDERAL ENERGY REGULATORY COMMISSION.

Notice of meeting.

November 25, 1980.

TIME AND DATE: 9 a.m., November 26, 1980.

PLACE: Room 9306, 825 North Capitol Street, Washington, D.C. 20426.

STATUS: Closed.

MATTERS TO BE CONSIDERED: The agency's participation in a civil action and disposition by the agency of a particular case of formal agency adjudication.

CONTACT PERSON FOR MORE INFORMATION: Kenneth F. Plumb, Secretary; telephone (202) 357-8400.

Kenneth F. Plumb,

Secretary.

[S-2170-80 Filed 11-25-80; 1 13 pm]

BILLING CODE 6450-85-M

8

FEDERAL ENERGY REGULATORY COMMISSION.

"FEDERAL REGISTER" CITATION OF PREVIOUS ANNOUNCEMENT: 45 FR 76840, November 20, 1980.

PREVIOUSLY ANNOUNCED TIME AND DATE OF MEETING: 10 a.m., November 25, 1980.

CHANGE IN THE MEETING: The following item has been added:

Item Number, Docket Number, and Company

CAM-3: RA80-11, Rudl's Kwik Gas N' Wash.

Kenneth F. Plumb,

Secretary.

[S-2161-80 Filed 11-24-80; 4.22 pm]

BILLING CODE 6450-85-M

9

FEDERAL ENERGY REGULATORY COMMISSION.

"FEDERAL REGISTER" CITATION OF PREVIOUS ANNOUNCEMENT: 45 FR 76840, November 20, 1980.

PREVIOUSLY ANNOUNCED TIME AND DATE OF MEETING: 10 a.m., November 25, 1980.

CHANGE IN THE MEETING: The following item has been added:

Item Number, Docket Number, and Company

M-4(B): RM81- , Interim Rule Under Section 108 of the NGPA Amending Section 271.805.

Kenneth F. Plumb,

Secretary.

[S-2163-80 Filed 11-25-80; 9 15 am]

BILLING CODE 6450-85-M

10

BOARD OF GOVERNORS OF THE FEDERAL RESERVE SYSTEM.

"FEDERAL REGISTER" CITATION OF PREVIOUS ANNOUNCEMENT: 45 FR 76567, November 19, 1980.

PREVIOUSLY ANNOUNCED TIME AND DATE OF THE MEETING: 10 a.m., Monday, November 24, 1980.

CHANGES IN THE MEETING: One of the items announced for inclusion at this meeting was consideration of any agenda items carried forward from a previous meeting: the following such closed item(s) was added:

1. Federal Reserve Bank and Branch director appointments. [This matter was originally announced for a meeting on November 10, 1980.]

CONTACT PERSON FOR MORE INFORMATION: Mr. Joseph R. Coyne, Assistant to the Board (202) 452-3204.

Dated: November 24, 1980.

Theodore E. Allison,

Secretary of the Board.

[S-2164-80 Filed 11-25-80; 9 28 am]

BILLING CODE 8210-01-M

11

[USITC SE-80-56]

INTERNATIONAL TRADE COMMISSION.

TIME AND DATE: 10 a.m., Friday, December 5, 1980.

PLACE: Room 117, 701 E Street NW., Washington, D.C. 20436.

STATUS: Parts of this meeting will be open to the public. The rest of the meeting will be closed to the public.

MATTERS TO BE CONSIDERED: PORTIONS OPEN TO THE PUBLIC:

1. Agenda.
2. Minutes.
3. Ratifications.
4. Petitions and complaints, if necessary:
   a. Multicellular film (Docket NO 695).
5. Electric motors from Japan (Inv 731-TA-7 [Final])—vote.
6. Airtight cast-iron stoves (Inv 337-TA-69)—briefing and vote.
7. Turning machines (Inv 337-TA-72)—briefing and vote.
8. Any items left over from previous agenda

PORTIONS CLOSED TO THE PUBLIC: 5. Electric motors from Japan (Inv. 731-TA-7 [Final])—briefing.

CONTACT PERSON FOR MORE INFORMATION: Kenneth R. Mason, Secretary (202) 523-0161.

[S-2165-80 Filed 11-25-80; 9 30 am]

BILLING CODE 7020-02-M

12

NATIONAL MEDIATION BOARD.

TIME AND DATE: 2 p.m., Wednesday, December 3, 1980.

PLACE: Board hearing room, eighth floor, 1425 K Street NW., Washington, D.C.

STATUS: Open.

MATTERS TO BE CONSIDERED:

(1) Ratification of Board actions taken by notation voting during the month of November, 1980.

(2) Other priority matters which may come before the Board for which notice will be given at the earliest practicable time

SUPPLEMENTARY INFORMATION: Copies of the montly report of the Board's notation voting actions will be available from the Executive Secretary's office following the meeting.

CONTACT PERSON FOR MORE INFORMATION: Mr. Rowland K. Quinn, Jr., Executive Secretary; Tel: (202) >523-5920.

Dated: November 24, 1980.

[S-2169-80 Filed 11-25-80; 11:51 am]

BILLING CODE 7550-01-M

13

OCCUPATIONAL SAFETY AND HEALTH REVIEW COMMISSION.

TIME AND DATE: 10 a.m., December 18, 1980.

PLACE: Room 1101, 1825 K Street NW., Washington, D C.

STATUS: Because of the subject matter, it is likely that this meeting will be closed.

MATTERS TO BE CONSIDERED: Discussion of specific cases in the Commission adjudicative process.

CONTACT PERSON FOR MORE INFORMATION: Ms. Patricia Bausell (202) 634-4015.

Dated: November 25, 1980.

[S-2171-80 Filed 11-25-80; 2 33 pm]

BILLING CODE 7600-01-M

14

OCCUPATIONAL SAFETY AND HEALTH REVIEW COMMISSION.

TIME AND DATE: 10 a.m., December 10, 1980.

PLACE: Room 1101, 1825 K Street NW., Washington, D.C.

STATUS: Because of the subject matter, it is likely that this meeting will be closed.

MATTERS TO BE CONSIDERED: Discussion of specific cases in the Commission adjudicative process.

CONTACT PERSON FOR MORE INFORMATION: Ms. Patricia Bausell (202) 634-4015.

Dated: November 25, 1980.

[S-2172-80 Filed 11-25-80; 2 34 pm]

BILLING CODE 7600-01-M

15

OCCUPATIONAL SAFETY AND HEALTH REVIEW COMMISSION.

TIME AND DATE: 10 a.m., December 4, 1980.

PLACE: Room 1101, 1825 K Street NW., Washington, D.C.

STATUS: Because of the subject matter, it is likely that this meeting will be closed.

MATTERS TO BE CONSIDERED: Discussion of specific cases in the Commission adjudicative process.

CONTACT PERSON FOR MORE INFORMATION: Ms. Patricia Bausell, (202) 634-4015.

Dated: November 25, 1980.

[S-2173-80 Filed 11-25-80; 2:34 pm]

BILLING CODE 7600-01-M

16

UNITED STATES RAILWAY ASSOCIATION.

TIME AND DATE: 9 a.m., December 4, 1980.

PLACE: Board room, room 2-500, fifth floor, 955 L'Enfant Plaza North, S.W., Washington, D.C.

STATUS: Parts of this meeting will be open to the public. The rest of the meeting will be closed to the public.

MATTERS TO BE CONSIDERED BY THE BOARD OF DIRECTORS: Portions closed to the public (9:00 a.m.):

1. Consideration of internal personnel matters.
2. Litigation Report.
3. Review of Conrail proprietary and financial information for monitoring and investment purposes.
4. Review of Delaware and Hudson Railway Company proprietary and financial information for monitoring and investment purposes.

Portions open to the public (11:00 a.m.):

5. Approval of minutes of the November 6, 1980 Board of Directors meeting.
6. Delaware and Hudson loan request.
7. Delaware and Hudson interest deferral request.
8. Conrail drawdown request for December.
9. Conrail first quarter 1981 investment commitment request.
10. Loan application under Section 211(h).
11. Report on Conrail monitoring.
12. Contract Actions (extensions and approvals).
13. Amendment to the USRA Pension Plan.
14. Update on Administrative Expense Budget.

CONTACT PERSON FOR MORE INFORMATION: Alex Bilanow, (202) 426-4250.

[S-2160-80 Filed 11-24-80; 4:21 pm]

BILLING CODE 8240-01-M

17

UNITED STATES RAILWAY ASSOCIATION.

TIME AND DATE: 9 a.m., December 3, 1980.

PLACE: Board room, room 2-500, fifth floor, 955 L'Enfant Plaza North, SW., Washington, D.C.

STATUS: The session will be closed to the public.

MATTERS TO BE CONSIDERED BY THE BOARD OF DIRECTORS: Portions closed to the public (9:00 a.m.):

1. Review of Conrail proprietary and financial information for monitoring and investment purposes.

CONTACT PERSON FOR MORE INFORMATION: Alex Bilanow (202) >426-4250.

[S-2159-80 Filed 11-24-80; 4:19 pm]

BILLING CODE 8240-01-M

Federal Register

Friday
November 28, 1980

Part II

Department of Transportation

Coast Guard

Licensing of Pilots; Proposed Rules

DEPARTMENT OF TRANSPORTATION

Coast Guard

[46 CFR Part 10]

[CGD 77-084]

Licensing of Pilots

AGENCY: Coast Guard, DOT.

ACTION: Proposed rules.

SUMMARY: The Coast Guard is proposing amendments to the regulations governing the qualifications of personnel involved in the piloting of vessels required to be under the control and direction of pilots licensed by the Coast Guard. The qualification standards for Coast Guard licensed pilots have, to date, provided qualified personnel to navigate United States vessels on routes requiring federal pilots. Congress has mandated the establishment of improved pilotage standards in section 4 of the Port and Tanker Safety Act of 1978 because it is believed that with the entry of ever larger vessels to U.S. ports, additional training, both practical and possibly through the use of simulators, coupled with recency of experience, is required to maintain the necessary level of personnel qualifications. The proposal provides for upgraded standards to meet current needs.

DATES: Comments must be received on or before February 26, 1981. The Coast Guard will hold four public hearings beginning at 10 a.m. at the following locations:

1. January 14, 1981, Cleveland, Ohio.
2. January 27, 1981, Washington, D.C.
3. February 3, 1981, New Orleans, Louisiana.
4. February 10, 1981, San Francisco, California.

ADDRESSES: 1. Comments should be mailed to Commandant (G-CMC/24) (CGD 77-084) U.S. Coast Guard, Washington, D.C. 20593. Between 7 a.m. and 5 p.m., Monday through Thursday, comments may be delivered to and will be available for inspection or copying at the Marine Safety Council (G-CMC/24), Room 2418, U.S. Coast Guard Headquarters, 2100 Second Street SW., Washington, D.C. 20593, (202) 426-1477.

2. The Coast Guard will hold four public hearings at the following locations:

a. January 14, 1981, Ritz Room, Bond Court Hotel, 777 St. Clair, Cleveland, Ohio 44114.

b. January 27, 1981, Room 2230, Department of Transportation, Nassif Building, 400 7th Street SW., Washington, D.C. 20590.

c. February 3, 1981, French Room, International Hotel, 300 Canal Street, New Orleans, Louisiana 70140.

d. February 10, 1981, Lotus Room, Holiday Inn, Financial District, 750 Kearny Street, San Francisco, California 94108.

FOR MORE INFORMATION CONTACT: Mr. John J. Hartke, Office of Merchant Marine Safety (G-MVP-4/14), Room 1400, U.S. Coast Guard Headquarters, 2100 Second Street SW., Washington, D.C. 20593, (202) 755-8683.

SUPPLEMENTARY INFORMATION: Interested persons are invited to participate in this rulemaking by submitting written data, views, or arguments. Written comments should include the docket number (CGD 77-084), the name and address of the person submitting the comments, and the specific section of the proposal to which each comment is addressed. Persons desiring acknowledgment that their comment has been received should enclose a stamped, self-addressed postcard or envelope. All comments received will be considered before final action is taken on this proposal.

Interested persons are invited to attend the hearings and present oral or written statements on this proposal. It is requested that anyone desiring to make comments notify the Executive Secretary of the Marine Safety Council at the address and telephone number listed above at least 10 days before the scheduled date of the public hearing and specify the approximate length of the time needed for the presentation. Comments at the public hearing will normally be heard in the order the request to comment is received. It is urged that a written summary or copy of the oral presentation be included with the request.

This proposal has been reviewed under the Department of Transportation's "Regulatory Policies and Procedures" (44 FR 11034, February 26, 1979). A draft evaluation has been prepared and has been included in the public docket. A copy of the draft evaluation may be obtained from: Commandant (G-CMC/24), (CGD 77-084), U.S. Coast Guard, Washington, D.C. 20593.

Drafting Information

The principal persons involved in drafting this proposal are: Commander James R. Norman and Mr. John J. Hartke, Project Managers, Office of Merchant Marine Safety, and Mary Ann McCabe and Lieutenant George J. Jordan, Project Attorneys, Office of the Chief Counsel.

Discussion of the Proposed Regulations

The present licensing regulations allow an applicant who presents service aboard vessels of relatively limited tonnage to be examined for a pilot license or pilotage endorsement as pilot of vessels of "any gross tons." Service on vessels of limited tonnage, under today's conditions, is not considered to be adequate in qualifying personnel to pilot very large vessels whose maneuvering characteristics may differ significantly from small vessels. Therefore, it is proposed that certain tonnage limitations be placed on a license or an endorsement as first class pilot which would more realistically reflect the applicant's experience, training and qualification.

In addition, it is considered necessary that a pilot demonstrate evidence of remaining qualified for the license or endorsement the pilot holds and that the pilot become proficient with the types, sizes, and maneuvering characteristics of new vessels developed as the marine mode of transportation changes. Therefore, it is proposed that an applicant for renewal of a license or endorsement as first class pilot show recent service as observer pilot, pilot, or deck officer for each route and tonnage authorized, in order to renew the license or endorsement.

These concepts of "recency of service" and "tonnage limitations" are to implement the provisions of section 4 of the Port and Tanker Safety Act of 1978 (Pub. L. 95-474) which require that pilots maintain adequate knowledge of the waters on which they operate (46 U.S.C. 214(b)(6)) and that they have experience which demonstrates their ability to handle vessels of various types and sizes (46 U.S.C. 214(b)(7)).

The proposed regulation does not require shiphandling simulator training but will allow this kind of training to be accepted as a partial substitute for practical experience if the applicant so chooses. Present estimates indicate that this training will cost approximately $3,000-$5,000 depending on the extent of training involved for a specific route. This cost may be borne by the student or by the pilot association that the applicant belongs to. In either case, the cost for this training is considered commensurate with the cost of training for any other highly skilled profession and not unreasonable in light of the expected benefits to be gained from such training.

The Coast Guard is presently involved in conducting a joint U.S. Coast Guard—Maritime Administration research and development project to determine if shiphandling simulator training should be required for certain licenses. If this study indicates a positive recommendation for requiring shiphandling simulator training, the Coast Guard will consider a proposed

rule change in this regard (possibly for masters, chief mates and pilots of large vessels) but only at such time as sufficient simulators are available. At the present time, only one shiphandling simulator, located at LaGuardia Airport, New York, is operational. The shiphandling simulator located at the U.S. Merchant Marine Academy, Kings Point, New York is a federally funded simulator dedicated to research work only.

It is now mandated by the Port and Tanker Safety Act of 1978 that the minimum age necessary for obtaining a pilot's license be 21. Therefore, the provision for issuance of a second class pilot's license at age 19 is being deleted. Any person holding an existing license as a second class pilot will be issued a first class pilot's license with an appropriate tonnage limitation, without further examination, when that person reaches the age of 21.

It is also mandated by statute that a pilot agree to periodically undergo a physical examination to determine that the pilot remains physically qualified to perform requisite duties. Therefore, the holder of a license or endorsement as first class pilot will be required to undergo an annual physical examination for this purpose. Persons who hold valid licenses or endorsements on the effective date of these regulations will not be required to undergo annual physicals until renewal of the license or endorsement. The result of this annual physical examination will be reported on Coast Guard form CG-954 which is the form currently in use for recording physical examinations for orginal licenses. This annual physical examination will be less stringent in regards to visual acuity than the physical for an original license. The physical standards for all U.S. merchant seamen are presently being reviewed and a separate proposed rulemaking will include updated physical requirements for all U.S. merchant seamen, including pilots.

This proposed regulation will not require any major expenditures from the maritime sector, consumers, Federal, State or local governments. However, the added requirement for an annual physical examination for pilots will entail additional operating expenditures for the U.S. Public Health Service Hospitals which will be the primary source for providing the physical examination. In the event the pilot chooses not to use a U.S. Public Health Hospital for this physical examination, the pilot may use a private physician, which will result in additional expenditures to the pilot or the pilot association that the pilot belongs to. In many cases, pilot associations have group medical insurance which provides for an annual physical. In any case, this is now a mandatory requirement in that Public Law 95-474, Section 4, requires that a pilot agree to an annual physical examination. In addition, it is expected that the issuance of pilots' licenses in tonnage increments commensurate with experience will result in some additional training expenditures to the maritime sector which will eventually be passed on to the consumer. However, this impact may be limited by the fact that some pilot associations by internal procedures already impose tonnage limits based on the individual members experience. It is considered that these additional costs are justified in light of the improved qualification standards that will be achieved with a resulting increase in vessel safety.

In consideration of the foregoing it is proposed that Part 10 of Title 46 of the Code of Federal Regulations be amended as follows:

PART 10—LICENSING OF OFFICERS AND MOTORBOAT OPERATORS AND REGISTRATION OF STAFF OFFICERS

1. By revising § 10.02-5(b) to read as follows:

§ 10.02-5 Requirements for original licenses.

* * * * *

(b) *Minimum age.* Any person who has attained the age of 21 years and is qualified in all other respects, is eligible for a license, except that a license as third mate or third assistant engineer may be granted an applicant who has reached the age of 19 years and who is qualified in all other respects, but no such license may be raised in grade before the holder reaches the age of 21 years.

* * * * *

2. By deleting the words ", or pilot" and inserting "or" preceding the word "mate" in the first sentence of § 10.02-9(e)(2).

3. By adding a new § 10.02-9(e)(7) to read as follows:

§ 10.02-9 Requirements for renewal of license.

* * * * *

(e) * * *

(7) The recency of service requirements for renewal of a license as first class pilot are in § 10.05-44.

* * * * *

4. By deleting the words ", or pilot" and inserting "or" preceding the word "mate" in the first sentence of § 10.02-9(f)(1).

5. By adding a new § 10.05-38 to read as follows:

§ 10.05-38 Original license as first class pilot.

(a) An applicant for an original first class pilot's license must furnish original or photostatic copies of discharges, letters, or other documentary evidence certifying—

(1) The names and gross tonnages of the vessels the applicant has served aboard;

(2) The period of service;

(3) The dates, number, and route description of round trips made; and

(4) The positions in which the applicant served.

(b) Each license as first class pilot issued prior to (effective date of the regulations) qualifies the licensee to serve in the grade as stated on the license, for the effective period of the license, subject to any limitation of the license.

(c) The minimum service required to qualify an applicant for an original license as a first class pilot is one of the following:

(1) Thirty-six months' service in the deck department of ocean, coastwise, Great Lakes, or bays, sounds, and lakes other than the Great Lakes steam or motor vessels as follows:

(i) At least 12 months of the required 36 months' service must be on vessels whose gross tonnage is commensurate with the tonnage limitation desired.

(ii) Eighteen months of the 36 months' service must be as quartermaster, wheelsman, able seaman, apprentice pilot, or in an equivalent capacity, standing regular watches at the wheel or in the pilothouse as part of routine duties.

(iii) At least 12 months of the 18 months' service required in paragraph (c)(1)(ii) of this section must be on vessels operating on the route for which pilotage is desired.

(iv) At least nine months of the required 36 months' service must be obtained within the 36 months immediately preceding the date of application.

(v) The required service must include at least 25 round trips during the preceding 36 months over the route for which the applicant seeks the license as follows:

(A) The round trips must have been made while the applicant was on the bridge or in the wheelhouse while the vessel was being navigated.

(B) The applicant must have documentary evidence from the vessel's master or pilot that the applicant was studying the aids to navigation and hazards of the route and was observing

the handling of the vessel during the round trips.

(C) At least five of the round trips must be made during periods of darkness.

(D) At least 10 of the round trips must be made over the route within the 12 months immediately preceding the date of application.

(E) At least three of the round trips must be made over the route within the three months immediately preceding the date of application.

(F) The minimum number and recency of round trips required for a specific route may be changed by the Officer in Charge, Marine Inspection provided approval is obtained from the District Commander within whose district the route lies.

(G) At least 15 of the required round trips must be made on vessels whose gross tonnage is commensurate with the tonnage limitation desired.

(H) Successful completion of a shiphandling simulator course of training approved by the Commandant is accepted as the equivalent of five of the 15 round trips required in paragraph (c)(1)(v)(G) of this section if the training is for both the route and the tonnage limitation desired.

(2) Graduation from the Great Lakes Maritime Academy in the deck class for a license as first class pilot on the Great Lakes.

(3) At least 36 months' service in the deck department of any vessel including at least 12 months' service on vessels operating on the waters of rivers while the applicant is serving in the capacity of quartermaster, wheelsman, apprentice pilot or deckhand who stands watches at the wheel as part of routine duties for a license as first class pilot of river routes. The provisions of paragraphs (c)(1) (iv) and (v) of this section apply to the service required by this paragraph.

(4) At least 24 months' service in the deck department of steam or motor vessels navigating canals and small lakes, including the New York State Barge Canal and Seneca and Cayuga Lakes in New York for license as first class pilot of steam and motor vessels of limited tonnage for the waters or routes on which the qualifying service was acquired. At least 12 months of the required service must be within the 24 months immediately preceding the date of application.

(d) Ten additional round trips completed over the minimum 25 round trips required may be accepted as the equivalent for six months' service if the excess round trips were made over the route for which the applicant seeks a license as first class pilot within the 36 months preceding the date of application.

(e) The period of time spent by an applicant successfully completing a course of pilot's training approved by the Commandant may be accepted, on a day for day basis, as the equivalent of the service required in paragraphs (c)(1)(i)–(iv) and (3) of this section, but in no case can the first class pilot license requirements be met without a minimum of nine months service on certificated vessels.

(f) The Officer in Charge, Marine Inspection, issuing a license as first class pilot, imposes limitations with respect to tonnage commensurate with the experience of the applicant as follows:

(1) 1,600 gross tons—service on vessels of 1,600 gross tons or less.

(2) 10,000 gross tons—service on vessels of more than 1,600 but not more than 10,000 gross tons.

(3) 60,000 gross tons—service on vessels of more than 10,000 but not more than 60,000 gross tons.

(4) 120,000 gross tons—service on vessels of more than 60,000 but not more then 120,000 gross tons.

(5) Any gross tons—service on vessels of more than 120,000 gross tons.

(g) When an application is made to any Officer in Charge, Marine Inspection (OCMI), for a route outside the OCMI's geographical jurisdiction, the OCMI receiving the application will request the OCMI having jurisdiction to evaluate the application and to forward the material necessary for examining the applicant. The complete examination file of the applicant is returned to the OCMI having jurisdiction, who, if satisfied that the applicant is qualified and capable, grants the authority and advises the other OCMI to issue the license.

(h) Table 10.05-38 is provided to assist applicants in determining the service/training requirements for an original license as first class pilot.

BILLING CODE 4910-14-M

Table 10.05-38 - Training/Service Requirements for an Original License as First Class Pilot

Route	Documented Service	Recent Service	Service as Able Seaman/ Wheelsman	Service on Specific Route	Total Member round trips required over route during the 34 months preceding application for license [3, 4]	Member of the specified total round trips which must be made over route during the 12 months preceding application for license	Member of the specified total round trips which must be made over the route during the 3 months preceding application for license	Member of the specified total round trips which must be completed during periods of of darkness
Great Lakes	34 months[1] or graduation from Great Lakes Maritime Academy in the deck class	9 months	18 months	12 months	25	10	3	5
		----------			25	10	3	5
Bays, sounds, and lakes other than the Great Lakes	34 months[1,2]	9 months	18 months	12 months	25	10	3	5
Rivers	34 months[1,2]	9 months	12 months	12 months	25	10	3	5
Canals and Small lakes[5]	24 months	12 months	---------	24 months	----------			

1 Satisfactory completion of an approved pilot's training course may be substituted, on a day for day basis, for the service required by 46 CFR 10.05-38(c)(1)(i)-(iv) and (3), but in no case can the first class pilot license requirements be met withouth a minimum of nine months service on certificated vessels.

2 10 round trips completed over the minimum 25 round trips required may be substituted for 6 months's service.

3 At least 15 of the required round trips must be made on vessels whose gross tonnage is commensurate with tonnage limitation desired.

4 Satisfactory completion of an approved shiphandling simulator course of training may be substituted for 5 round trips, provided the training is for the route and tonnage desired.

5 License issued for limited tonnages only.

BILLING CODE 4910-14-C

6. By revising § 10.05–39 to read as follows:

§ 10.05–39 Increase in tonnage of license or endorsement as first class pilot.

(a) An applicant desiring to increase the tonnage limitation on a license or endorsement as first class pilot must—

(1) Have at least 12 months' employment as first class pilot or deck officer on the existing license or endorsement; and

(2) Provide documentary evidence of completion of at least eight round trips as observer pilot on vessels whose gross tonnage is commensurate with the next higher tonnage limitation indicated in § 10.05–38(f).

(b) Successful completion of a shiphandling simulator course of training approved by the Commandant is accepted as the equivalent of four of the total round trips required by paragraph (a)(2) of this section.

7. By revising § 10.05–41 to read as follows:

§ 10.05–41 Physical examination requirements for a license or endorsement as first class pilot.

(a) An applicant for an original license as first class pilot must meet the physical examination requirements specified in § 10.02–5(e)(1)–(3), and (7).

(b) No person will be issued a license or endorsement as first class pilot unless that person agrees to have a thorough physical examination each year while holding the license or endorsement.

(c) Holders of a valid license or endorsement as first class pilot issued after (effective date of the final regulations) must undergo an annual physical examination meeting the requirements specified in paragraph (a) of this section, which is conducted by a medical officer of the United States Public Health Service, or other licensed physician, except that the pilot must have uncorrected vision of at least 20/200 in both eyes correctable to at least 20/20 in one eye and 20/40 in the other. A pilot who does not have uncorrected vision of at least 20/200 in both eyes may continue to serve as a pilot: *Provided,* The person is physically qualified in all other respects, and the uncorrected vision in one eye is at least 20/100, correctable to at least 20/20. The results of this physical examination must be reported on Coast Guard form CG-954 which may be obtained from any Officer in Charge, Marine Inspection.

(d) The annual physical examination specified by paragraph (c) of this section may be completed at any time within 90 days prior to the expiration of the last annual physical examination period. Completion of this annual physical examination will be recorded by an Officer in Charge, Marine Inspection on the reverse side of the license held.

(e) If the satisfactory completion of the annual physical examination is not recorded on the license within 12 months of the previous physical examination, the pilot license or pilot endorsement held becomes invalid and the pilot cannot engage in pilot duties until a current physical examination has been completed and recorded on the license held.

(f) An applicant for renewal of a license or endorsement as first class pilot must satisfactorily complete a physical examination meeting the requirements specified in paragraph (c) of this section.

8. By revising § 10.05–42 to read as follows:

§ 10.05–42 Endorsement to master's or mate's license as first class pilot or extension of first class pilot's route.

(a) The holder of a license as master, mate or first class pilot who has had at least three months' service under the authority of the license within the preceding 36 months is eligible for examination for an endorsement as first class pilot or extension of first class pilot's route upon completing the number of round trips over the route required for the grade of license as set out in this section.

(b) A master or chief mate applying for endorsement of a license to act as first class pilot, or a first class pilot applying for an extension of route must present documentary evidence of having completed at least 12 round trips within the 36 months preceding the application over the route for which endorsement or extension of route is desired. At least eight of the required round trips must be made on vessels whose gross tonnage is commensurate with the tonnage limitation desired.

(c) A second mate or third mate applying for endorsement of a license to act as first class pilot must present documentary evidence of having completed at least 20 round trips within the 36 months preceding the application over the route for which the endorsement is desired. At least 12 of the required round trips must be made on vessels whose gross tonnage is commensurate with the tonnage limitation desired.

(d) Successful completion of a shiphandling simulator course of training approved by the Commandant is accepted as the equivalent of five of the total number of round trips required in paragraphs (b) and (c) of this section if the training is for the route and tonnage limitation desired.

(e) Six of the round trips required in paragraphs (b) and (c) of this section must be made over the route within the 12 months immediately preceding the date of application.

(f) Three of the round trips required in paragraphs (b) and (c) of this section must be made over the route within the three months immediately preceding the date of application.

(g) At least three of the round trips required by paragraphs (b) and (c) of this section must be made during periods of darkness.

(h) The minimum number and recency of round trips required for a specific route may be changed by the Officer in Charge, Marine Inspection provided approval is obtained from the District Commander within whose district the route lies.

(i) The round trips required under this section must be made while the applicant was on the bridge or in the wheelhouse while the vessel was being operated and the applicant must have documentary evidence from the vessel's master or pilot that the applicant was studying the aids to navigation and the hazards of the route and was observing the handling of the vessel during the round trips. Experience as an observer pilot meets the requirements of this paragraph.

(j) Any endorsement as first class pilot issued under this section is limited as to tonnage as provided in § 10.05–38(f).

(k) When an application is made to any Officer in Charge, Marine Inspection (OCMI), for an extension of route which is outside the OCMI's geographical jurisdiction, the OCMI receiving the application will request the OCMI having jurisdiction to evaluate the application and to forward the material necessary for examining the applicant. The complete examination file of the applicant is returned to the OCMI having jurisdiction, who, if satisfied that the applicant is qualified and capable, grants the authority and advises the other OCMI to endorse the license.

(1) Table 10.05–42 is provided to assist applicants in determining the service/training requirements for an endorsement to a master's or mate's license as first class pilot or extension of first class pilot's route.

BILLING CODE 4910-14-M

Table 10.05-42 - Training/Service Requirements for an endorsement to a Master's or Mate's license or extension of First Class Pilots' route

License presently held	Recent Service	Total Number round trips required over route during the 36 months preceding application for endorsement or extension of route [1]	Number of the specified total round trips which must be made over route during the 12 months preceding application for endorsement or extension of route	Number of the specified total round trips which must be made over the route during the 3 months preceding application for endorsement or extension of route	Number of the specified total round trips which must be completed during periods of darkness
Master, Chief Mate	3 months	12[2]	6	3	3
Second Mate, Third Mate	3 months	20[3]	6	3	3
First Class Pilot	3 months	12[2]	6	3	3

1 Satisfactory completion of an approved shiphandling simulator course of training may be substituted for 5 round trips, provided the training is for the route and tonnage desired.

2 At least 8 of the required round trips must be made on vessels whose gross tonnage is commensurate with tonnage limitation desired.

3 At least 12 of the required round trips must be made on vessels whose gross tonnage is commensurate with tonnage limitation desired

BILLING CODE 4910-14-C

9. By revising § 10.05–43 to read as follows:

§ 10.05–43 Examination for a license as first class pilot.

(a) An applicant for an original license as first class pilot or initial endorsement of a master's or mate's license as first class pilot is required to pass an examination that includes:

(1) Showing knowledge of the following subjects:

(i) Rules of the Road applicable to route.

(ii) Pilot rules applicable to route.

(iii) Local winds, weather, tides, and currents.

(iv) Chart navigation.

(v) Aids to navigation.

(vi) Ship handling.

(vii) Pollution prevention and abatement.

(viii) The Captain of the Port regulations and the Vessel Traffic Services procedures, if applicable, for the route desired.

(ix) Any other subject the Officer in Charge, Marine Inspection considers necessary to establish the applicant's proficiency; and

(2) Sketching a chart of the route and waters applied for, showing—

(i) Courses;

(ii) Distances;

(iii) Shoals;

(iv) Aids to navigation;

(v) Depths of water; and

(vi) Other important features of the route.

(b) An applicant for extension of a first class pilot's route is required to pass an examination as prescribed in paragraphs (a)(1) (i)–(iii), (viii), (ix), and (2) of this section.

10. By adding a new § 10.05–44 to read as follows:

§ 10.05–44 Requirements for renewal of a license or endorsement as first class pilot.

(a) Except as provided in paragraph (d) of this section, to renew a license or endorsement as first class pilot, an applicant must—

(1) Comply with §§ 10.02–9 and 10.05–41(f); and

(2) Have served within 36 months of the date of application as a first class pilot, observer pilot, or deck officer on at least one of the routes being renewed.

(b) The license or endorsement is renewed for each route on which the applicant—

(1) Has served as required in paragraph (a)(2) of this section; or

(2) Passes an examination on local knowledge specified in § 10.05–43(a)(1) (iii), (viii), and (2) (iii)–(vi).

(c) The license or endorsement is renewed at the tonnage limitation previously authorized if the applicant has served as required in paragraph (a)(2) of this section on a vessel of the tonnage previously authorized. If the applicant has not served as required in paragraph (a)(2) of this section on a vessel of the tonnage previously authorized, the license or endorsement is renewed with a tonnage limitation in accordance with § 10.05–38(f).

(d) If an applicant has not served on any route within 36 months of the date of application for renewal, the applicant must pass the examination on Rules of the Road and local knowledge specified in § 10.05–43(a)(1) (i)–(iii), (viii) and (2) (iii)–(vi) of this subpart and the license or endorsement is renewed with a maximum tonnage limitation of 10,000 gross tons or with the previously authorized tonnage limitation if less than 10,000 gross tons.

(e) If a tonnage limit has been placed on an applicant's license or endorsement under paragraphs (c) or (d) of this section, the applicant may have the previously authorized higher tonnage reinstated by completing 5 round-trips as an observer pilot or deck officer on any of the routes authorized on a vessel of the previously authorized higher tonnage within 36 months preceding the date of application for reinstatement.

(46 U.S.C. 214, 224, 230, 233; 49 U.S.C. 1655(b)(1); 49 CFR 1.46(b))

Dated: November 18, 1980.

J. B. Hayes,

Admiral, U.S. Coast Guard, Commandant.

[FR Doc. 80–36595 Filed 11–26–80; 8:45 am]

BILLING CODE 4910–14–M

federal register

Friday
November 28, 1980

Part III

Department of Labor

Employment Standards Administration, Wage and Hour Division

Minimum Wages for Federal and Federally Assisted Construction; General Wage Determination Decisions

DEPARTMENT OF LABOR

Employment Standards Administration, Wage and Hour Division

Minimum Wages for Federal and Federally Assisted Construction; General Wage Determination Decisions

General wage determination decisions of the Secretary of Labor specify, in accordance with applicable law and on the basis of information available to the Department of Labor from its study of local wage conditions and from other sources, the basic hourly wage rates and fringe benefit payments which are determined to be prevailing for the described classes of laborers and mechanics employed on construction projects of the character and in the localities specified therein.

The determinations in these decisions of such prevailing rates and fringe benefits have been made by authority of the Secretary of Labor pursuant to the provisions of the Davis-Bacon Act of March 3, 1931, as amended (46 Stat. 1494, as amended, 40 U.S.C. 276a) and of other Federal statutes referred to in 29 CFR 1.1 (including the statutes listed at 36 FR 306 following Secretary of Labor's order No. 24–70) containing provisions for the payment of wages which are dependent upon determination by the Secretary of Labor under the Davis-Bacon Act; and pursuant to the provisions of part 1 of subtitle A of title 29 of Code of Federal Regulations, Procedure for Predetermination of Wage Rates (37 FR 21138) and of Secretary of Labor's Orders 12–71 and 15–71 (36 FR 8755, 8756). The prevailing rates and fringe benefits determined in these decisions shall, in accordance with the provisions of the foregoing statutes, constitute the minimum wages payable on Federal and federally assisted construction projects to laborers and mechanics of the specified classes engaged on contract work of the character and in the localities described therein.

Good cause is hereby found for not utilizing notice and public procedure thereon prior to the issuance of these determinations as prescribed in 5 U.S.C. 553 and not providing for delay in effective date as prescribed in that section, because the necessity to issue construction industry wage determination frequently and in large volume causes procedures to be impractical and contrary to the public interest.

General wage determination decisions are effective from their date of publication in the Federal Register without limitation as to time and are to be used in accordance with the provisions of 29 CFR Parts 1 and 5. Accordingly, the applicable decision together with any modifications issued subsequent to its publication date shall be made a part of every contract for performance of the described work within the geographic area indicated as required by an applicable Federal prevailing wage law and 29 CFR, Part 5. The wage rates contained therein shall be the minimum paid under such contract by contractors and subcontractors on the work.

Modifications and Supersedeas Decisions to General Wage Determination Decisions

Modifications and supersedeas decisions to general wage determination decisions are based upon information obtained concerning changes in prevailing hourly wage rates and fringe benefit payments since the decisions were issued.

The determinations of prevailing rates and fringe benefits made in the modifications and supersedeas decisions have been made by authority of the Secretary of Labor pursuant to the provisions of the Davis-Bacon Act of March 3, 1931, as amended (46 Stat. 1494, as amended, 40 U.S.C. 276a) and of other Federal statutes referred to in 29 CFR 1.1 (including the statutes listed at 36 FR 306 following Secretary of Labor's Order No. 24–70) containing provisions for the payment of wages which are dependent upon determination by the Secretary of Labor under the Davis-Bacon Act; and pursuant to the provisions of part 1 of subtitle A of title 29 of Code of Federal Regulations, Procedure for Predetermination of Wage Rates (37 FR 21138) and of Secretary of Labor's orders 13–71 and 15–71 (36 FR 8755, 8756). The prevailing rates and fringe benefits determined in foregoing general wage determination decisions, as hereby modified, and/or superseded shall, in accordance with the provisions of the foregoing statutes, constitute the minimum wages payable on Federal and federally assisted construction projects to laborers and mechanics of the specified classes engaged in contract work of the character and in the localities described therein.

Modifications and supersedeas decisions are effective from their date of publication in the Federal Register without limitation as to time and are to be used in accordance with the provisions of 29 CFR Parts 1 and 5.

Any person, organization, or governmental agency having an interest in the wages determined as prevailing is encouraged to submit wage rate information for consideration by the Department. Further information and self-explanatory forms for the purpose of submitting this data may be obtained by writing to the U.S. Department of Labor, Employment Standards Administration, Wage and Hour Division, Office of Government Contract Wage Standards, Division of Government Contract Wage Determinations, Washington, D.C. 20210. The cause for not utilizing the rulemaking procedures prescribed in 5 U.S.C. 553 has been set forth in the original General Determination Decision.

New General Wage Determination Decisions

None

Modifications to General Wage Determination Decisions

The numbers of the decisions being modified and their dates of publication in the Federal Register are listed with each State.

Arkansas:	
AR80-4079	Nov. 7, 1980.
AR80-4080	Oct. 31, 1980.
AR80-4081	Nov. 7, 1980.
AR80-4082	Nov. 7, 1980.
AR80-4083	Oct. 31, 1980.
Colorado:	
CO80-5137	Oct. 24, 1980.
CO80-5138	Oct. 24, 1980.
Florida: FL80-1072	May 16, 1980.
Maryland: MD80-3061	Oct. 30, 1980.
Massachusetts: MA80-2070	Aug. 29, 1980.
Nevada:	
NV79-5102	Mar. 9, 1979.
NV80-5100	Feb. 1, 1980.
Ohio: OH80-2052	July 7, 1980.
Pennsylvania:	
PA80-3028	Apr. 11, 1980.
PA80-3044	July 25, 1980.
PA80-3060	Oct. 10, 1980.
PA80-3071	Oct. 24, 1980.
Washington: WA80-5136	Oct. 17, 1980.

Supersedeas Decisions to General Wage Determination Decisions

The numbers of the decisions being superseded and their dates of publication in the Federal Register are listed with each State. Supersedeas decision numbers are in parentheses following the numbers of the decisions being superseded.

California: CA78-5122 (CA80-5147)	Aug. 11, 1978.
Missouri:	
MO79-4071 (MO80-4093)	Aug. 3, 1979.
MO80-4040 (MO80-4094)	June 13, 1980.
New Mexico: NM80-4057 (NM80-4090)	July 18, 1980.

Cancellation of General Wage Determination Decisions

The general wage decision listed below is cancelled. Agencies with construction projects pending to which the cancelled decision would have been applicable should utilize the project determination procedure by submitting Form SF-308. See Regulations Part 1 (29 CFR), § 1.5. Contracts for which bids have been opened shall not be affected by this notice. Also consistent with 29 CFR, 1.7(b)(2), the incorporation of the cancelled decision in contract specifications, the opening of bids is within ten (10) days of this notice, need not be affected.

FL80-1041, Suwannee County, Florida—Building Construction in 45 FR 1344 dated January 4, 1980.

Signed at Washington, D.C. this 21st day of November 1980.

Dorothy P. Come,

Assistant Administrator, Wage and Hour Division.

BILLING CODE 4510-27-M

Modification Page 1

	Basic Hourly Rates	Fringe Benefits Payments			
		H & W	Pensions	Vacat on	Education and/or Appr. Tr.
DECISION #AR80-4079-Mod.#1 45FR74344-November 7, 1980 Garland, Hot Springs and Clark Counties, Arkansas CHANGE: SPRINKLER FITTERS	$12.53	.85	1.20		.08
DECISION #AR80-4080-Mod.#2 45FR72439-October 31, 1980 Jefferson County, Arkansas CHANGE: SPRINKLER FITTERS	12.53	.85	1.20		.08
DECISION #AR80-4081-Mod.#1 45FR74342-November 7, 1980 Sebastian, Crawford and Washington Cos., Arkansas CHANGE: SPRINKLER FITTERS	12.53	.85	1.20		.08
DECISION #AR80-4082-Mod.#1 45FR74345-November 7, 1980 Union & Ouachita Counties, Arkansas CHANGE: SPRINKLER FITTERS	12.53	.85	1.20		.08
DECISION #AR80-4083-Mod.#2 45FR72438-October 31, 1980 Pulaski County, Arkansas CHANGE: SPRINKLER FITTERS	12.53	.85	1.20		.08

Modification Page 2

	Basic Hourly Rates	Fringe Benefits Payments			
		H & W	Pensions	Vacation	Education and/or Appr. Tr.
DECISION NO. CO80-5137 - Mod. #2 (45 FR 70577 - Oct. 24, 1980) Adams, Arapahoe, Boulder, Clear Creek, Denver, Douglas, Eagle, Elbert, Gilpin, Grand, Jefferson, Lake, Larimer, Morgan, Park, Summit and Weld Counties, Colorado CHANGE: ELECTRICIANS: Larimer, Morgan and Weld Counties: Electricians	$14.85	.70	3%+1.25		3/10%
DECISION NO. CO80-5138 - Mod. #2 (45 FR 70682 - Oct. 24, 1980) El Paso County, Colorado CHANGE: Soft floor layers	$12.39	.80	1.05	.75	.10

Modification Page 3

	Basic Hourly Rates	Fringe Benefits Payments			
		H & W	Pensions	Vacation	Education and/or Appr. Tr.
DECISION NO. FL80-1072 - MOD. #4 (45 FR 32535 May 16, 1980) Cape Canaveral Air Force Station, Patrick Air Force Base, Kennedy Space Flight Center & Melabar Radar Site, Florida					
Change:					
Asbestos Workers	$ 13.25	.65	.65		.06
Ironworkers	11.28	.80	.90	.65	.05
Plumbers:					
Industrial	14.40	.88	.89		.05
DECISION NO. MD80-3061 - MOD. #1 (45 FR 70690 - October 30, 1980) Counties of Anne Arundel (excluding the D.C. Training School), Baltimore Baltimore City Maryland, and for Heavy Construction Projects in Harford and Howard Counties, Maryland					
CHANGE:					
Laborers, Heavy to read as follows:					
LABORERS, HEAVY (Excluding tunnel construction):					

Modification Page 4

	Basic Hourly Rates	Fringe Benefits Payments			
		H & W	Pensions	Vacation	Education and/or Appr. Tr.
DECISION NO. MA80-2070 - MOD. #1 (45 FR 57926 - August 29, 1980) Berkshire, Franklin, Hampden and Hampshire Counties, Massachusetts					
CHANGE:					
CARPENTERS: Soft Floor Layers, Drywall Carpenters:					
FRANKLIN COUNTY (Remainder of County); HAMPDEN, HAMPSHIRE COUNTIES	11.65	.60	1.00		.02
ELEVATOR CONSTRUCTORS	12.13	1.195	.95	a+b	.035
ELEVATOR CONSTRUCTORS' HELPERS	8.49	1.195	.95	a+b	.035
IRONWORKERS:					
HAMPSHIRE; HAMPDEN; FRANKLIN COS.; BERKSHIRE CO. (Becket, Washington, Lee, Sandisfield, New Marlboro, Hinsdale, Peru, Savoy, Monterey, Sheffield, Windsor, Otis, N. & E. Otis)	12.20	1.15	2.55		.09
BERKSHIRE CO. (Remainder of County)	12.55	.75	1.25		.04
LINE CONSTRUCTION:					
Linemen	13.50	.70	3%+.75	d	3/4 of1%
Equipment Operator	11.55	.70	3%+.75	d	3/4 of1%
Groundman	9.28	.70	3%+.75	d	3/4 of1%
Driver Groundman	10.35	.70	3%+.75	d	3/4 of1%
SIGN PAINTERS	10.25	.84	.50	.82	.04
PLUMBERS:					
FRANKLIN COUNTY (Orange Only)	11.71	.80	.65	.47	.05
FRANKLIN COUNTY (Remainder of County); HAMPSHIRE CO. (Remainder of County)	13.38	.10	1.60		.10
SPRINKLER FITTERS	14.28	.85	1.20		.08

DECISION NO. MA80-2070 - CONT'D

	Basic Hourly Rates	Fringe Benefits Payments			
		H & W	Pensions	Vacation	Education and/or Appr. Tr.
BUILDING CONSTRUCTION POWER EQUIPMENT OPERATORS:					
CLASS I	11.63	.95	1.00	a	.07
CLASS II	11.43	.95	1.00	a	.07
CLASS III	11.23	.95	1.00	a	.07
CLASS IV	10.86	.95	1.00	a	.07
CLASS V	9.84	.95	1.00	a	.07
CLASS VI	9.29	.95	1.00	a	.07
CLASS VII	8.39	.95	1.00	a	.07

BUILDING CONSTRUCTION POWER EQUIPMENT OPERATORS

CLASS I - Shovels, Cranes, Hydraulic Cranes 10 Ton Capacity or over, Draglines, Derricks, Elevator with Chicago Boom, Backhoes, Gradalls, Elevating Graders, Piledrivering Rigs, Concrete Road Pavers, three Drum Hoisting and Trenching Machines, Belt-type Loaders, Front End Loader-5½ yds. or over, Dual Drum Paver, Automatic Grader (i.e. C. M. I.) Combination Back Hoe-Loader-3/4 yd. hoe or over

CLASS II - Rotary Drill (with mounted compressor), Compressor House (3 to 6 compressors), Rock and Earth Boring machines (excluding McCarthy and similar drills), Graders, Front End Loaders - 4 yds. to 5½ yds.; two Drum Hoists, High Fork Lifts with Capacity of 15 feet and over, scrapers - 21 yds. and over (struck load), Sonic Hammer Console

CLASS III - Combination Backhoe - Loader - up to 3/4 Hoe, Bulldozers, Push Cats, Scraper - up to 21 yds. (struck load) - self-propelled or Tractor Drawn, Fireman, Front End Loaders - up to 4 yds., asphalt Paver, Asphalt Roller - 10 ton or over, Well Drillers, Mechanic, Welders, Pumpcrete Machines, Concrete Pumps and similar type Pumps, Engineer or Fireman on High Pressure Boiler (on-job), Self-Loader Batch plant, Well Point, Electric pumps used in Well Point System, Pumps - 12 inches and over (total discharge), Compressor (one or two) 900 cu. ft. and over, Powered Grease Truck, Automatic Elevators (manually or remote control) Grout Pumps, Boom Truck, Hydraulic Cranes - under 10 Ton

DECISION NO. MA80-2070 - CONT'D

BUILDING CONSTRUCTION POWER EQUIPMENT OPERATORS (CONT'D)

CLASS IV - Asphalt Roller - under 10 ton

CLASS V - Single Drum Hoist, Self-Propelled Roller, Self-Propelled Compactors, Power Pavement Breakers, Concrete Finishing Machines, Two Bag Mixers With Skip, McCarthy and similar Drills, Batch Plants (not self-loading) Buck Cement Plants, self-loading) Bulk Cement Plants, self-Propelled Material, A Frame Trucks, Fork Lifts up to 15 feet

CLASS VI - Compressors (one or two) 315 cu. ft. to 900 cu. ft., Pumps-4 inches Power Pavement Breakers, Concrete Finishing Machines, Two Bag Mixers with Skip, McCarthy and similar Drills, Batch Plants (not self-loading) Bulk Cement Plants, Self-Propelled Material Spreaders, A-Fram Trucks, Fork Lifts up to 15 Feet

CLASS VII - Compressors (up to 315 cu. ft.), Small Mixers, Pumps (up to 4 inches), Power Heaters, Welding Machines, Conveyors, Oiler, Helpers on Grease Truck, and Grease Truck with Hand Greasing Equipment

PAID HOLIDAYS:
A-New Year's Day; B-Memorial Day; C-Independence Day; D-Labor Day; E-Thanksgiving Day; F-Christmas Day

FOOTNOTES:

a. Holidays: A through F, Veterans' Day and Columbus Day

DECISION NO. MA80-2070 - CONT'D

	Basic Hourly Rates	Fringe Benefits Payments			
		H & W	Pensions	Vacation	Education and/or Appr. Tr.
HEAVY AND HIGHWAY CONSTRUCTION					
POWER EQUIPMENT OPERATORS:					
CLASS I	11.63	.95	1.00	a	.07
CLASS II	11.43	.95	1.00	a	.07
CLASS III	11.23	.95	1.00	a	.07
CLASS IV	10.86	.95	1.00	a	.07
CLASS V	9.84	.95	1.00	a	.07
CLASS VI	9.29	.95	1.00	a	.07
CLASS VII	8.39	.95	1.00	a	.07
CLASS VIII	12.13	.95	1.00	a	.07

HEAVY AND HIGHWAY CONSTRUCTION POWER EQUIPMENT OPERATORS

CLASS I - Shovels, Crawler and Truck Cranes, Derricks, Backhoes, Trenching Machines, Elevating Graders, Belt-type Loaders, Gradalls, Pile Drivers, Concrete Pavers, on Site Processing Plant (Engineer in charge), Dragline, Clam Shell, Cableways, Shaft Hoists, Mucking Machines, Front End Loader - 5½ yards and over, Tower Cranes, Self-propelled Hydraulic Cranes - 10 Tons and over, Dual Paver, Automatic Grader-Excavator (C.M.I. or equal), Scrapers, Towing Pan or Wagon, Tandem Dozers or Push Cats (2 units in tandem), Welder using Semi Automatic Welding Machine, Shotcrete Machine, Tunnel Boring Machine

CLASS II - Rotary Drill (with mounted Compressor), Compressor House (3 to 6 Compressors), Rock and Earth Boring Machines (excluding McCarthy and similar drills), Grader, Front End Loaders-4 yards to 5½ yards, Scraper-21 yards and over (struck load), Forklifts-7 ft. lift and over or 3 ton capacity & over; Sonic Hammer Console

CLASS III - Bulldozer, Push Cats, Scrapers-up to 21 yards (struck load) Self-propelled or Tractor Drawn, Self-powered Asphalt Paver, Front end Loaders up to 4 yards, Mechanics, Welders, Well Driller, Pumpcrete Machine, Engineer or Fireman on Highway Pressure Boiler (on job), Self-loading Batch Plant (on job), Well Point Operators, Electric Pumps used in Well Point System, Tirecon, Pumps-16 inches or over total Discharge, Compressors (1 or 2 cu. ft. and over Powered Grease Truck, Asphalt Roller-10 ton and over, Tunnel Locomotives and Dinkys, Grout Pumps, Hydraulic Jacks (jacking pipe, slip forms, etc.), Rough Terrain Self-propelled Hydraulic Cranes up to 10 Tons

DECISION NO. MA80-2070 - CONT'D

HEAVY AND HIGHWAY CONSTRUCTION POWER EQUIPMENT OPERATORS CONT'D

CLASS IV - Asphalt Roller-up to 10 tons

CLASS V - Hoists, Conveyors, self-powered Rollers and Compactors, Power Pavement Breaker, Self-propelled Material Spreader, Self-powered Concrete Finishing Machine, Two Bag Mixer with Skip, McCarthy and similar Drills, Batch Plant (not self-loading), Bulk Cement Plant

CLASS VI - Compressor (315 cu. ft. to 900 cu. ft., 1 or 2), Pumps 4" to 16" total Discharge, Tractor without Blade Drawing Sheeps-foot Roller, Rubber tired Roller or other type of Compactors including Machines for pulverizing and aerating Soil

CLASS VII - Compactor (up to 315 cu. ft.), Small Mixers with Skip, Oiler, Pumps up to 4", Grease Truck, Helper on Powered Grease Truck, Power Heaters, Welding Machines, A-Frame Trucks, Forklifts-up to 7 ft. lift and up to 3 ton capacity, Hydro Broom, Parts Man (in repair shop), Power Safety Boat

CLASS VIII - Operator of Cranes with 200 ft of boom or more

FOOTNOTES:

a. Holidays: New Year's Day; Washington's Birthday; Memorial Day; Independence Day; Labor Day; Columbus Day; Veteran's Day; Thanksgiving Day and Christmas Day

Modification Page 9

DECISION NO. NV79-5102 - Mod. #6
(44 FR 1322 - March 9, 1979)
Clark County (does not include the Nevada Test Site), Nevada

Change:
Laborers:

	Basic Hourly Rates	Fringe Benefits Payments			
		H & W	Pensions	Vacation	Education and/or Appr. Tr.
Group 1	$11.75	.81	$1.58		
Group 2	11.96	.81	1.58		
Group 3	12.06	.81	1.58		
Group 4	12.15	.81	1.58		
Group 5	12.25	.81	1.58		

DECISION NO. NV80-5100-Mod. #6
(45 FR 7451 - February 1, 1980)
Statewide (does not include the Nevada Test Site and Tonopah Test Range, and highway construction in Douglas County), Nevada

Change:
Laborers:
Clark, Esmeralda, Lincoln, Nye County (south half, including Hwy. #6):

Group 1	11.75	.81	1.58
Group 2	11.96	.81	1.58
Group 3	12.06	.81	1.58
Group 4	12.15	.81	1.58
Group 5	12.25	.81	1.58

Modification Page 10

DECISION NO. OH80-2052 - MOD. #5
(45 FR 45834 - July 7, 1980)
Statewide, Ohio

Change:
Line Construction:
Carroll (N. ½ incl. Fox, Harrison, Rose & Washington Twps.), Columbiana (Knox Twp.), Holmes, Mahoning (Smith Twp.), Stark, Tuscarawas (N. of Auburn, Clay, Rush, & York Twps.), & Wayne (S. of Baughman, Chester, Green & Wayne Twps.) Cos.:

	Basic Hourly Rates	Fringe Benefits Payments			
		H & W	Pensions	Vacation	Education and/or Appr. Tr.
Linemen	$14.61	.79	3%+.80		.3%

Modification Page 11

DECISION NO. PA80-3028 MOD. NO. 4 (45 FR 25019 - April 11, 1980) Berks County, Pennsylvania	Basic Hourly Rates	Fringe Benefits Payments			
		H & W	Pensions	Vacation	Education and/or Appr. Tr.
CHANGE:					
Line Construction:					
Lineman	$12.67	.60	3%		3/8%
Groundman	7.55	.60	3%		3/8%
Winch truck operator	8.86	.60	3%		3/8%
POWER EQUIPMENT OPERATORS					
Group 1	13.40	7.9%	10.3%	a	1.8%
Group 2	13.11	7.9%	10.3%	a	1.8%
Group 3	12.24	7.9%	10.3%	a	1.8%
Group 4	11.47	7.9%	10.3%	a	1.8%
Group 5	11.00	7.9%	10.3%	a	1.8%
Group 6	10.69	7.9%	10.3%	a	1.8%
Group 7	13.66	7.9%	10.3%	a	1.8%
Group 7-A	13.90	7.9%	10.3%	a	1.8%
Group 7-B	14.14	7.9%	10.3%	a	1.8%
Plumbers	13.53	.85	1.60		.14

DECISION NO. PA80-2044 MOD. NO. 2 (45 FR 49839 - July 25, 1980) Northumberland County, Pennsylvania	Basic Hourly Rates	H & W	Pensions	Vacation	Education and/or Appr. Tr.
CHANGE:					
Asbestos Workers	$12.275	.80	.90	a	.01
Marble & Tile Setters	11.00	.55	.65		
POWER EQUIPMENT OPERATORS:					
Group 1	13.40	7.9%	10.3%	a	1.8%
Group 2	13.11	7.9%	10.3%	a	1.8%
Group 3	12.24	7.9%	10.3%	a	1.8%
Group 4	11.47	7.9%	10.3%	a	1.8%
Group 5	11.00	7.9%	10.3%	a	1.8%
Group 6	10.69	7.9%	10.3%	a	1.8%
Group 7	13.66	7.9%	10.3%	a	1.8%
Group 7-A	13.90	7.9%	10.3%	a	1.8%
Group 7-B	14.14	7.9%	10.3%	a	1.8%

Modification Page 12

DECISION NO. PA80-3060 MOD. NO. 1 (45 FR 67531 - October 10, 1980) Lycoming County, Pennsylvania	Basic Hourly Rates	Fringe Benefits Payments			
		H & W	Pensions	Vacation	Education and/or Appr. Tr.
CHANGE:					
Bricklayers & Stonemasons	$10.80	1.05	.75		
POWER EQUIPMENT OPERATORS:					
Group 1	13.40	7.9%	10.3%	a	1.8%
Group 2	13.11	7.9%	10.3%	a	1.8%
Group 3	12.24	7.9%	10.3%	a	1.8%
Group 4	11.47	7.9%	10.3%	a	1.8%
Group 5	11.00	7.9%	10.3%	a	1.8%
Group 6	10.69	7.9%	10.3%	a	1.8%
Group 7	13.66	7.9%	10.3%	a	1.8%
Group 7-A	13.90	7.9%	10.3%	a	1.8%
Group 7-B	14.14	7.9%	10.3%	a	1.8%

DECISION NO. PA80-3071 MOD. NO. 1 (45 FR 70699 - October 23, 1980) Allegheny County, Pennsylvania	Basic Hourly Rates	H & W	Pensions	Vacation	Education and/or Appr. Tr.
CHANGE:					
Sheet Metal Workers	$13.79	1.12	1.66		.23
Painters	14.76	.37	1.50		.16

Modification Page 13

DECISION NO. WA80-5136 - Mod #2 (45 FR 69151 - October 17, 1980) Statewide Washington	Basic Hourly Rates	Fringe Benefits Payments			
		H & W	Pensions	Vacation	Education and/or Appr. Tr.
CHANGE:					
Truck Drivers (Area 2) All Counties and portions of Counties West of the 120th Meridian (Except those enumerated in area 3) including the Northern portion of Pacific County and all of Kittitas and Yakima Counties:					
Group 1	$15.18	1.06	1.33		.14
Group 2	15.23	1.06	1.33		.14
Group 3	15.28	1.06	1.33		.14
Group 4	15.39	1.06	1.33		.14
Group 5	15.45	1.06	1.33		.14
Group 6	15.49	1.06	1.33		.14
Group 7	15.50	1.06	1.33		.14
Group 8	15.56	1.06	1.33		.14
Group 9	15.61	1.06	1.33		.14
Group 10	15.63	1.06	1.33		.14
Group 11	15.66	1.06	1.33		.14
Group 12	15.76	1.06	1.33		.14
Group 13	15.78	1.06	1.33		.14
Group 14	15.82	1.06	1.33		.14
Group 15	15.94	1.06	1.33		.14
Group 16	15.98	1.06	1.33		.14
Group 17	16.10	1.06	1.33		.14
Group 18	16.15	1.06	1.33		.14
Group 19	16.31	1.06	1.33		.14
Group 20	16.47	1.06	1.33		.14
Group 21	16.63	1.06	1.33		.14
OMIT GROUP DESCRIPTIONS:					
Power Equipment Operators (Area 3) Clark, Cowlitz, Klickitat, Skamania, and Wahkiakum Counties and the Southern portion of Pacific Co					
Group 3					
Group 13					

Modification Page 14

DECISION NO. WA80-5136 (Cont'd)	Basic Hourly Rates	Fringe Benefits Payments			
		H & W	Pensions	Vacation	Education and/or Appr. Tr.
OMIT GROUP DESCRIPTIONS:					
Truck Drivers (Area 2) All Counties and portions of Counties West of the 120th Meridian (Except those enumerated in Area 3) including the Northern portion of Pacific County and all of Kittitas and Yakima Counties:					
Group 6					
Group 15					
Truck Drivers (Area 3) Clark, Cowlitz, Klickitat, Skamania, and Wahkiakum Counties and the Southern portion of Pacific County					
Group 8					

Modification Page 15

DECISION NO. WA80-5136 (Cont'd)

ADD GROUP DESCRIPTIONS:

Power Equipment Operators (Area 3)
Clark, Cowlitz, Klickitat, Skamania, and Wahkiakum Counties and the Southern part of Pacific County.

Group 3 Asphalt plant fireman; Pugmill operator (any type); Truck mounted asphalt spreader with screed; Compressor operator (any power) under 1250 Cu. ft. total capacity; Conveyor operator; Mixer box operator (C.T.B., dry batch, etc); Cement hog; Concrete saw; Concrete curing machine (riding type); Wire mat or brooming machine; Rock carrier operator (on job site); Bucket elevator loader, Barber Greene and similar type; Hydraulic pipe press; Pump operator (any power) 4" and over; Hydrostatic pump; Motorman; Ballast Jack tamper; Bell boy, phones, etc.; Tamping machine, mechanical self-propelled; Hydrographic seeder machine, straw, pulp, or seed; Broom operator, self propelled (on job site); Air filtration equipment; Welding machine operator.

Group 13 Blade operator, finish; Blade, externally controlled by electronic, mechanical hydraulic means; Blade, multi-engine; Concrete paving road mixer; Derrick under 100 tons; Hoist, stiff leg, Guy derrick or similar, 50 tons and over; Gantry operator 25 tons and over; Crane over 25 tons to and including 40 tons; Piledriver operator; Floating clamshell etc. under 2 cu yds; Floating crane (derrick barge) less than 20 tons; Elevating grader operated by tractor operator, Sierra, Euclid, or similar; Back filling machine; Shovel, etc, 1 cu yd and less than 3 cu yds; Grade-all 1 cu yd and over; Bridge crane operator, locomotive crane, gantry and overhead.

Truck Drivers (Area 2)
All Counties and portions of Counties West of the 120th Meridian (Except those enumerated in Area 3) including the Northern portion of Pacific County and all of Pittitas and Yakima Counties

Group 6 Transit-mix, 8 to and including 40 yards

Group 10 Dumpsters and similar equipment (as listed in Group 9) over 30 yds to and including 40 yds; Doubled and heavy duty trailer over 100 tons gross

Truck Drivers (Area 3)

Clark, Cowlitz, Klickitat, Skamania, and Wahkiakum Counties and the Southern portion of Pacific County

Group 8 Dump trucks, side, end and bottom dumps including coal trucks and trains or combinations thereof over 30 cu yd including 40 cu yds; Transit mix and wet or dry rock trucks over 11 cu yds including 13 cu yds; Water wagon (rated capacity) over 10,000 to 15,000 gallons

SUPERSEDEAS DECISION

STATE: California

COUNTIES: Imperial, Kern, Los Angeles, Orange, Riverside, San Bernardino, San Luis Obispo, Santa Barbara and Ventura

DECISION NUMBER: CA80-5147

DATE: Date of Publication

Supersedes Decision No. CA78-5122 date August 11, 1978, in 43 FR 35835

DESCRIPTION OF WORK: Residential Projects consisting of single family homes and apartments up to and including 4 stories

	Basic Hourly Rates	Fringe Benefits Payments			
		H & W	Pensions	Vacation	Education and/or Appr. Tr
ASBESTOS WORKERS	$18.74	$1.30	$1.45		.07
BOILERMAKERS	15.11	1.255	1.75	1.00	.04
BRICKLAYERS; Stonemasons:*					
Area 1*	14.09	1.13	1.34		.12
Area 2	15.45	1.15	1.65		.07
Area 3	15.25	1.15	2.20		.05
Area 4	14.95	1.20	2.35		.10
Area 5	15.32	1.45	2.00		.06
BRICK TENDERS	11.23	1.25	2.90	1.00	.12
CARPENTERS:					
Carpenters	13.81	1.63	2.21	1.00	.10
Saw Filers*	13.89	1.63	2.21	1.00	.10
Table Power Saw Operators	13.91	1.63	2.21	1.00	.10
Shavingers, Pile drivers, Bridge or Construction, Derrick Barge on Pile Sinker	13.94	1.63	2.21	1.00	.10
Hardwood Floor Layers	14.01	1.63	2.21	1.00	.10
Power Saw Handler	14.06	1.63	2.21	1.00	.10
Millwrights	14.31	1.63	2.21	1.00	.10
CEMENT MASONS:					
Cement Masons	13.61	1.30	1.85	1.25	.08
Cement Finishers and Terrazzo Finishers	13.86	1.30	1.85	1.25	.08
HIGHWAY, PARKING	14.63	1.63	2.21	.95	.09
ELECTRICIANS:*					
Area 1:					
Electricians	15.98	.75	38+1.45		
Cable Splicers	16.28	.75	38+1.45		
Area 2:					
Electricians; Technicians	19.00	1.10	38+1.95		.15
Cable Splicers	20.00	1.10	38+1.95		.15
Area 3:					
Electricians; Technicians	17.05	1.10	38+1.95		.15
Cable Splicers	18.05	1.10	38+1.95		.15
Area 4:					
Electricians	15.67	1.15	38+2.70		.12
Cable Splicers	15.97	1.15	38+2.70		.12

*See AREA Descriptions - Page 4

DECISION NO. CA80-5147 Page 2

	Basic Hourly Rates	Fringe Benefits Payments			
		H & W	Pensions	Vacation	Education and/or Appr. Tr.
ELECTRICIANS:* (Cont'd)					
Area 5:					
Electricians	$17.24	.81	3%+1.45		.02
Cable Splicers	18.03	.81	3%+1.45		.02
Area 6:					
Electricians	15.91	.81	3%+1.45		.04
Cable Splicers	16.41	.81	3%+1.45		.04
Area 7:					
Electrians	14.90	1.21	3%+2.90		.04
Cable Splicers	15.40	1.21	3%+2.90		.04
Area 8:					
Electriciains	16.98	1.23	3%+1.50		.03
Cable Splicers	18.68	1.23	3%+1.50		.03
Area 9:					
Electricians	20.80	1.30	3%+1.50		.03
Cable Splicers	22.30	1.30	3%+1.50		.03
Area 10:					
Electricians	18.05	1.30	3%+1.50		.03
Cable Splicers	19.55	1.30	3%+1.50		.03
Area 11:					
Electricians	16.71	1.20	3%+1.95		.02
Cable Splicers	18.38	1.20	3%+1.95		.02
ELEVATOR CONSTRUCTORS:*					
Area 1:					
Elevator Constructors	15.41	1.045	.82	a	.035
Elevator Constructors' Helpers	70%JR	1.045	.82	a	.035
Area 2:					
Elevator Constructors	16.37	.895	.82	a	.035
Elevator Constructors' Helpers	70%JR	.895	.82	a	.035
GLAZIERS:*					
Area 1	18.50	1.10	3.00		.07
IRONWORKERS:					
Fence Erectors	13.11	1.39	3.11	2.15	.07
Reinforcing	14.00	1.39	3.11	2.15	.07
Ornamental; Structural	14.00	1.39	3.11	2.15	.07
IRRIGATION and LAWN SPRINKLERS:*					
Area 1	11.12	10%	16%	13%	1½%

*See AREA Descriptions - Page 4

DECISION NO. CA80-5147 Page 3

	Basic Hourly Rates	Fringe Benefits Payments			
		H & W	Pensions	Vacation	Education and/or Appr. Tr.
LATHERS:*					
Area 1	$12.58	$1.15	$1.85	.90	.05
Area 2	14.00	1.26	1.99		.03
Area 3	15.63	1.63	2.21	1.00	.10
Area 4	13.60	.95	1.70	1.00	.03
PAINTERS:*					
Area 1:					
Brush; Paint Burners	14.26	1.23	1.43	.75	.07
Iron, steel and bridge (swing stage); Sheet Rock Taper	15.26	1.23	1.43	.75	.07
Brush (swing stage); Spray	14.51	1.23	1.43	.75	.07
Steeplejack	15.91	1.23	1.43	.75	.07
Area 2:					
Brush	13.46	1.29	1.33	.60	.10
Structural steel and bridge; Painter Burner	13.58	1.29	1.33	.60	.10
Tapers	14.06	1.29	1.33	.60	.10
Brush swing stage (13 stories or less); Paperhangers; Sandblasters; Spray	13.71	1.29	1.33	.60	.10
Brush swing stage (over 13 stories)	13.83	1.29	1.33	.60	.10
Structural steel and bridge, swing (13 stories and less)	13.71	1.29	1.33	.60	.10
Spray Sandblaster swing stage (13 stories or less); Past Machine; Special coating spray	13.96	1.29	1.33	.60	.10
Steeplejack	14.71	1.29	1.33	.60	.10
Area 3:					
Brush	11.03	.80	1.00	1.10	.03
Brush or roller, swing stage; Paperhangers; Taping joint sheet rock	11.28	.80	1.00	1.10	.03
Spray; Sandblasters	11.53	.80	1.00	1.10	.03

*See AREA Descriptions - Page 4

AREA DESCRIPTIONS

BRICKLAYERS; Stonemasons:
Area 1: Imperial County
Area 2: Los Angeles and Orange Counties
Area 3: Riverside and San Bernardino Counties
Area 4: Santa Barbara and San Luis Obispo Counties
Area 5: Ventura County

ELECTRICIANS:
Area 1: Imperial County
Area 2: Kern County (China Lake Naval Ordnance Test Station, Edwards Air Force Base)
Area 3: Kern County (remainder of County)
Area 4: Los Angeles County
Area 5: Orange County
Area 6: Riverside County
Area 7: San Bernardino County
Area 8: San Luis Obispo County
Area 9: Santa Barbara County (Vandenberg Air Force Base)
Area 10: Remainder of County
Area 11: Ventura County

ELEVATOR CONSTRUCTORS:
Area 1: Imperial County; Kern County (south of Tehachapi Range); Los Angeles, Orange, Riverside, San Bernardino, San Luis Obispo, Santa Barbara, and Ventura Counties
Area 2: Kern County (north of Tehachapi Range)

IRRIGATION and LAWN SPRINKLERS:
Area 1: Imperial, Los Angeles, Orange, Riverside, San Bernardino, San Luis Obispo, Santa Barbara and Ventura Counties

LATHERS:
Area 1: Kern County
Area 2: Los Angeles County (except City of Lancaster)
Area 3: Ventura County
Area 4: Orange County

PAINTERS:
Area 1: Imperial, Orange, Riverside, Los Angeles (Pomona Area); San Bernardino County (excluding western portion)
Area 2: Kern County (Lancaster, Mohave, Palmdale, China Lake Naval Ordnance Test Station and Edwards Air Force Base); Los Angeles County (except Pomona Area); San Bernardino (west of a line north of Trona including China Lake Area, Johannesburg, Boron, South including the Wrightwood area)
Area 3: Kern County (remainder of County)

	Basic Hourly Rates	Fringe Benefits Payments			
		H & W	Pensions	Vacation	Education and/or Appr. Tr.
PAINTERS:* (cont'd)					
Area 4:					
Brush; Pot Tender	$11.99	$1.07	$1.30		.03
Paperhangers; Paste Machine Operators; Iron and steel	12.12	1.07	1.30		.03
Spray; Taper; Sandblasters	12.37	1.07	1.30		.03
Sign Painter	12.31	1.07	1.30		.03
Steeplejack	12.87	1.07	1.30		.03
PLASTERERS:					
Area 1	12.335	.95	1.85		.12
Area 2	18.95				
Area 3	14.51	1.30	3.00		.02
PLASTERERS' TENDERS:*					
Area 1	13.32	1.25	2.90	1.00	
Area 2	14.25	1.25	2.90	1.00	
Area 3	11.25	1.25	2.90	1.00	
Area 4	13.32	1.25	2.90	1.00	
Area 5	13.175	1.25	2.90	1.20	
Area 6	12.48	1.25	2.90	1.20	
Area 7	13.83	1.05	2.45	1.10	
PLUMBERS:*					
Area 1	15.25	1.53	2.44	1.95	.11
Area 2	15.88	1.05	2.25	1.45	.17
REFRIGERATION and AIR CONDITIONING:*					
Area 1	10.70	.96	.85	1.00	.05
Area 2	13.52	2.00	2.00	1.52	.30
ROOFERS:*					
Area 1	12.79	.80	1.05	1.00	
Area 2	12.05	.80	.60		.02
Area 3	13.31	.97	2.05		.065
Area 4	13.37	.645	1.49		
Area 5	12.65	.80	1.00	1.25	
SHEET METAL WORKERS:*					
Area 1	14.96	1.04	2.24		.01
Area 2	13.67	1.04	1.80		.02
Area 3	14.51	1.14	1.80		.02
Area 4	15.16	1.14	2.52		.10
Area 5	14.16	1.14	2.52		.09
Area 6	13.90	1.14	2.64		.16
Area 7	16.37	1.20	2.52		.06

*See AREA Descriptions - Page 6

AREA DESCRIPTIONS

PAINTERS: (Cont'd)
Area 4: San Luis Obispo, Santa Barbara and Ventura Counties

PLASTERERS' TENDERS:
Area 1: Imperial, Riverside, and San Bernardino Counties
Area 2: Kern County (China Lake Naval Ordnance Test Station, Edwards Air Force Base)
Area 3: Kern County (remainder of County)
Area 4: Los Angeles and Orange Counties
Area 5: San Luis Obispo County
Area 6: Santa Barbara County
Area 7: Ventura County

PLUMBERS; Steamfitters:
Area 1: Imperial, Los Angeles, Orange, Riverside, San Bernardino, San Luis Obispo, Santa Barbara, and Ventura Counties
Area 2: Kern County

REFRIGERATION and AIR CONDITIONING:
Area 1: Riverside and San Bernardino Counties
Area 2: Los Angeles and Orange Counties

ROOFERS:
Area 1: Imperial County
Area 2: Kern County
Area 3: Los Angeles, Orange, and Ventura Counties
Area 4: San Luis Obispo and Santa Barbara Counties
Area 5: Riverside and San Bernardino Counties

SHEET METAL WORKERS:
Area 1: Imperial County
Area 2: Kern County(china Lake Naval Ordnance Test Station and Edwards Air Force Base)
ARea 3: Kern County (remainder of County); and Los Angeles County (that portion north of straight linedrawn between Gorman and Big Pines)
Area 4: Los Angeles County (remaining portion)
Area 5: Orange County
Area 6: Riverside and San Bernardino Counties
Area 7: San Luis Obispo, Santa Barbara and Ventura Counties

	Basic Hourly Rates	Fringe Benefits Payments			
		H & W	Pensions	Vacation	Education and/or Appr. Tr.
SOFT FLOOR LAYERS:*					
Area 1	$11.52	.81	$1.45		.10
Area 2	14.42	.75	1.20	.80	.08
Area 3	13.40	.90	.90	1.25	.09
SPRINKLER FITTERS:*					
Area 1	18.67	.85	1.20		.08
Area 2	16.83	.83	1.05		.09
TILE SETTERS:*					
Area 1	12.69	.81	1.17		.08
Area 2	10.50	1.20	1.85		.07
Area 3	14.60	1.15	2.20		
Area 4	11.20	.65	.55		
TILE FINISHERS:*					
Area 1	9.96	1.39	1.30		.13

PAID HOLIDAYS:
A-New Year's Day; B-Memorial Day; C-Independence Day; D-Labor Day; E-Thanksgiving Day; F-Christmas Day

FOOTNOTE:
a. Employer contributes 8% of basic hourly rate for over 5 years' service and 6% of basic hourly rate for 6 months to 5 years' service as Vacation Pay Credit. Six Paid Holidays: A thru F.

AREA DESCRIPTIONS

SOFT FLOOR LAYERS:
Area 1: Imperial County
Area 2: Los Angeles, Orange, Riverside, Santa Barbara, San Luis Obispo, San Bernardino, and Ventura Counties
Area 3: Kern County

SPRINKLER FITTERS:
Area 1: Imperial and Kern Counties; Orange County (except Santa Ana); Riverside County; San Bernardino County (except Ontario); San Luis Obispo, Santa Barbara, and Ventura Counties (except Santa Paula, Point Mugu and Port Hueneme)
Area 2: Los Angeles County (Los Angeles City and area within 25 miles, and Pomona); Orange County (Santa Ana); San Bernardino (Ontario); and Ventura County (Santa Paula, Point Mugu and Port Hueneme)

TILE SETTERS:
Area 1: Imperial County
Area 2: Los Angeles, Orange, and Ventura Counties
Area 3: San Luis Obispo, and Santa Barbara Counties
Area 4: Riverside and San Bernardino Counties
Area 5: Kern County

TILE FINISHERS:
Area 1: Los Angeles, Orange, and Ventura Counties

LABORERS	Basic Hourly Rates	Fringe Benefits Payments			
		H & W	Pensions	Vacation	Education and/or Appr. Tr.
GENERAL CLEAN-UP LABORER	$ 9.63	$1.25	$2.90	1.20	
GROUP 1	10.63	1.25	2.90	1.20	.12
GROUP 2	10.78	1.25	2.90	1.20	.12
GROUP 3	10.98	1.25	2.90	1.20	.12
GROUP 4	11.28	1.25	2.90	1.20	.12
GROUP 5	11.48	1.25	2.90	1.20	.12
GUNITE LABORERS					
Nozzleman and Rodman	12.62	1.25	2.90	1.20	.12
Gunman	11.97	1.25	2.90	1.20	.12
Reboundman	10.91	1.25	2.90	1.20	.12
Vandenberg AFB, Point Arguello, Camp Roberts, Naval Ordnance Test Station, Lawrence Mtn. LABORERS					
GENERAL CLEAN-UP LABORER	11.63	1.25	2.90	1.20	
GROUP 1	12.63	1.25	2.90	1.20	.12
GROUP 2	12.78	1.25	2.90	1.20	.12
GROUP 3	12.98	1.25	2.90	1.20	.12
GROUP 4	13.28	1.25	2.90	1.20	.12
GROUP 5	13.48	1.25	2.90	1.20	.12
GUNITE LABORERS					
Nozzleman and Rodman	14.62	1.25	2.90	1.20	.12
Gunman	13.97	1.25	2.90	1.20	.12
Reboundman	12.91	1.25	2.90	1.20	.12

Group 1: Boring Machine Tender (outside); Cleaning and Handling of Panels Forms; Concrete Screening for rough strike-off; Concrete, water curing; Demolition Laborer, the cleaning of brick and lumber; Dry of concrete, plugging, of Shee-bolt Holes; Fire Watcher, Laborer, Brush Loaders, Pilers and Debris Handlers; Flagman, gas, oil and/or water Pipe Line Laborer; Laborer, general or construction; Laborer, landscaping; Laborer, jetting; Laborer, temporary water and air lines; Material Hoveman (walls, slabs, floors and decks); Rigging and Signaling Sealer; Slip Form Pilers; Slurry Seal Crew, (Mixer Operator, Applicator Operator, Squeegee Man, Shuttle Man, Top Man); Striper, asphalt, concrete or other paved surfaces; Tarman and Mortar Man; Tool Crib or Tool House Laborer; Traffic Delineating Device Applicator; Window Cleaner; Wire Mesh Pulling, all concrete pouring operations

LABORERS (Cont'd).

Group 2: Asphalt Shoveler; Cement Dumper (on 1 yard or larger mixer and handling bulk cement); Cesspool Digger and Installer; Chucktender; Chute Man, pouring concrete, the handling of the chute from readymix trucks, such as walls, slabs, decks, floors, foundations, footings, curbs, gutters and sidewalks; Concrete Curer--Impervious Membrane and Form Oiler; Cutting torch operator (demolition); Fine Grader, highways and street paving, airport, runways, and similar type heavy construction; Gas, oil and/or water pipeline wrapper--pot tender and form man; Guinea Chaser; Headerboard man--Asphalt; Laborer, packing rod steel and pans; Power Broom Sweepers (small); Riprap Stonepaver, placing stone or wet sacked concrete; Roto Scraper and Tiller; Sandblasters (pot tender); Septic Tank Digger and Installer (leadman); Tank Scaler and Cleaner; Tree Climber, faller, chain saw operator, Pittsburgh Chipper and similar type Brush Shredders; Underground Laborer, including Caisson Bellower

Group 3: Asphalt Raker, Luteman, Ironer and Asphalt Spreader Boxes (all types); Buggymobile Man; Concrete Core Cutter, Grinder or Sander; Concrete Cutting Torch; Concrete Saw Man, cutting, scoring old or new concrete; Driller; Jackhammer, 2-1/2 ft. drill steel or longer; Dri Pak-it Machine; Gas, oil and/or Water Pipeline Wrapper--6" Pipe and over by any method, inside and out; Hydro Seeder and similar type; Impact Wrench, multi-plate; Kettlemen, Potmen and Men applying asphalt, lay-kold, creosote, lime caustic and similar type materials ("applying" means applying, dipping, brushing or handling of such materials for pipe wrapping and waterproofing); Operators of Pneumatic, gas, electric tools, Vibrating Machines, Pavement Breakers, Air Blasting, Come-alongs, and similar mechanical tools not separately classified herein; Pipelayer's Backup Man, coating, grouting making of joints, sealing, caulking, diapering and including rubber gasket joints, pointing and any and all other services; Rock Slinger; Rotary Scarifier or Multiple Head Concrete Chipping Scarifier; Steel Headerboard Man and Guideline Setter; Tampers, Barko, Wacker and similar type; Trenching Machine, hand propelled

Group 4: Cribber, Shorer, Lagging, Sheeting and Trench Bracing, hand-guided Lagging Hammer; Head Rock Slinger; Laser Beam; Oversize Concrete Vibrator Operator, 70 lbs. and over; Pipelayer, including water, sewage, solid, gas or air; Prefabricated Manhole Installer; Sandblaster (nozzleman), water blasting; Welding in connection with laborers' work

Group 5: Blasters Powderman--all work of loading holes, placing and blasting of all powder and explosives of whatever type, regardless of method used for such loading and placing; Driller: All power drills, excluding jackhammer, whether core, diamond, wagon, track, multiple unit, and any and all types of mechanical drills

POWER EQUIPMENT OPERATORS	Basic Hourly Rates	Fringe Benefits Payments			
		H & W	Pensions	Vacation	Education and/or Appr. Tr.
Group 1	$13.60	$1.10	$2.65	.90	.14
Group 2	13.88	1.10	2.65	.90	.14
Group 3	14.17	1.10	2.65	.90	.14
Group 4	14.31	1.10	2.65	.90	.14
Group 5	14.53	1.10	2.65	.90	.14
Group 6	14.64	1.10	2.65	.90	.14
Group 7	14.76	1.10	2.65	.90	.14
Group 8	14.93	1.10	2.65	.90	.14
Group 9	15.06	1.10	2.65		.14

POWER EQUIPMENT OPERATORS

Group 1: Brakeman; Compressor (less than 600 C.F.M.); Engineer Oiler; Generator; Heavy Duty Repairman; Helper; Pump; Signalman; Switchman

Group 2: Compressor (600 C.F.M. or larger); Concrete Mixer, skip type, Conveyor; Fireman; Hydrostatic Pump; Oiler Crusher (asphalt or concrete plant); Plant Operator; Generator, Pump or Compressor; Rotary Drill Helper (oilfield); Skiploader - wheel type up to 3/4 yd. w/o attachments; Soils Field Technician; Tar Pot Fireman; Temporary Heating Plant; Trenching Machine Oiler; Truck Crane Oiler

Group 3: A-Frame or Winch Truck; Elevator Operator (inside); Equipment Greaser (rack); Ford Ferguson (with dragtype attachments); Helicopter Radioman (ground); Power Concrete Curing Machine; Power Concrete Saw; Power driven Jumbo Form Setter Ross Carrier (job site); Stationary Pipe Wrapping and Cleaning Machine

Group 4: Asphalt Plant Fireman; Boring Machine; Boxman or Mixerman (asphalt or concrete); Chip Spreading Machine; Concrete Pump (small portable); Bridge type Unloader and Turntable; Dinkey Locomotive or Motorman (up to and including 10 tons); Equipment Greaser (greaser truck); Helicopter Hoist; Highline Cableway Signalman; Hydra-hammer-aero Stomper; Power Sweeper; Roller (compacting); Screed (asphalt or concrete); Trenching Machine (up to 6 ft.)

Group 5: Asphalt Plant Engineer; Backhoe (up to and including 3/4 yd.); Batch Plant Bit Sharpener; Concrete Joint Machine (canal and similar type); Concrete Planer; Deck Engine; Derrickman (oilfield type); Drilling Machine Operator (including water wells; Forklift (under 5-ton capacity); Hydrographic Seeder Machine (straw, pulp or seed); Machine Tool Operator; Maginnis Internal Full Slab Vibrator; Mechanical Berm, Curb or Gutter (concrete or asphalt); Mechanicial Finisher (concrete-Clary, Johnson, Bidwell or similar); Pavement Breaker (truck mounted); Road Oil Mixing Machine; Roller (asphalt or finish); Rubber-tired Earth moving Equipment (single engine, up to and including 25 yds. struck); Self-propelled Tar Pipelining Machine; Slip Form Pump (power-driven hydraulic lifting device for concrete forms); Sliploader (Crawler and wheel type over 3/4 yd. and up to and including 1½ yds.); Stinger Crane (Austin-Western or similar type); Tractor-Bulldozer

POWER EQUIPMENT OPERATORS (Cont'd)

Group 6: Asphalt or Concrete Spreading (tamping or finishing); Asphalt Paving Machine (Barber Greene or similar type); Bridge Crane Operator; Cast-in-place Pipe Laying Machine; Combination Mixer and Compressor (gunite work); Compactor, Self-propelled; Concrete Mixer - paving; Concrete Pump (truck mounted); Crane Operator up to and including 25 ton capacity) (Long-boom pay applicable); Crushing Plant; Drill Doctor; Elevating Grader; Forklift (over 5 tons); Grade Checker; Grade-all; Grouting Machine; Heading Shield; Heavy Duty Repairman; Hoist Operator (Chicago Boom and similar type); Kolman Belt Loader and similar type; LeTourneau Blob Compactor or similar type; Lift Mobile; Lift Slab Machine (Vagtborg and similar types); Loader (Athey, Euclid, Sierra and similar type); Material Hoist; Mucking Machine (1/4 yd. rubber tired, rail or track type); Pneumatic Concrete Placing Machine (Hackley-Presswell or similar type); Pneumatic Heading Shield (tunnel); Pumperete Gun; Rotary Drill (excluding caisson type); Rubber-tired Earth Moving Equipment (single engine-Caterpillar, Euclid, Athey Wagon, and similar types with any and all attachments over 25 yds. and up to and including 50 cu. yds. struck); Rubber-tired Earth Moving Equipment (multiple engine, up to and including 25 yds. struck); Rubber-tired Scraper (self-loading - paddle wheel type - John Deer, 1040 and similar single unit); Skiploader (crawler and wheel type - over 1½ yds. up to and including 6½ yds.); Surface Heaters and Planer; Trenching Machine (over 6 ft. depth capacity); Tower Crane; Tractor Compressor Drill Combination; Tractor (any type larger than D-5-100 flywheel h.p. and over, or similar); Bulldozer, Tamper, Scraper and Push Tractor single engine); Tractor (boom attachments); Traveling Pipe Wrapping, Cleaning and Bending Machine; Tunnel Locomotive (over 30 tons); Shovel, Backhoe, Dragline, Clamshell (over 3/4 yd. and up to 5 cu. yds. m.r.c.) (Long Boom Pay applicable); Self-propelled Curb and Gutter Machine

Group 7: Crane, over 25 ton up to and including 100 tons m.r.c. (long boom pay applicable); Derrick Barge (long boom pay applicable); Dual Drum Mixer; Heavy Duty Repairman-welder Combination; Hoist, Stiff-legs, Guy Derrick or similar type, up to and including 100 tons (long boom pay applicable); Mono-rail Locomotive (diesel), gas or electric); Motor Patrol-blade Operator (single engine); Multiple Engine Tractor (Euclid and similar type, except quad nine Cat); Rubber-tired Earth Moving Equipment (single engine, over 50 yds. struck); Rubber-tired Earth Moving Equipment (multiple engine, Euclid, Caterpillar and similar) (over 25 yds. and up to 50 cu. yds. struck); Shovel, Backhoe, Dragline, Clamshell (over 5 cu. yds. m.r.c.) (long boom pay applicable); Tower Crane Repairman; Tractor Loader (crawler and wheel type over 6½ yds.); Welder-certified; Woods Mixer and similar Pugmill Equipment

Group 8: Auto Grader; Automatic Slip Form; Crane-over 100 tons (long boom pay applicable); Hoist-stiff Legs, Guy Derrick or similar types (capable of hoisting 100 tons or more) (long boom pay applicable); Mass Excavator - less than 750 cu. yds.; Mechanical Finishing Machine; Mobile Form Traveler; Motor Patrol, multi-engine); Pipe Mobile Machine; Rubber-tired earth moving equipment (multiple engine, Euclid, Caterpillar and similar type over 50 cu. yds. struck); Rubber tired self-loading Scraper (paddle wheel-auger type self-loading-2 or more units); Rubber-tired Scraper - pushing one another w/o Push Cat. Push-pull (50¢ per hour additional to base rate); Tandem Equipment (2 units only); Tandem Tractor (Quad 9 or similar type); Tunnel Hole Boring Machine

Group 9: Canal Liner; Canal Trimmer; Helicopter Pilot; Highline Cableway; Remote Controlled Earth Moving Equipment ($1.00 p/h additional to base rate); Wheel Excavator (over 750 cu. yds.)

TRUCK DRIVERS	Basic Hourly Rates	Fringe Benefits Payments			
		H & W	Pensions	Vacation	Education and/or Appr. Tr.
Group 1:	$12.41	1.25	1.33	1.35	.15
Group 2:	12.99	1.25	1.33	1.35	.15
Group 3:	13.05	1.25	1.33	1.35	.15
Group 4:	13.14	1.25	1.33	1.35	.15
Group 5:	13.17	1.25	1.33	1.35	.15
Group 6:	13.19	1.25	1.33	1.35	.15
Group 7:	13.23	1.25	1.33	1.35	.15
Group 8:	13.24	1.25	1.33	1.35	.15
Group 9:	13.29	1.25	1.33	1.35	.15
Group 10:	13.32	1.25	1.33	1.35	.15
Group 11:	13.37	1.25	1.33	1.35	.15
Group 12:	13.39	1.25	1.33	1.35	.15
Group 13:	13.44	1.25	1.33	1.35	.15
Group 14:	13.69	1.25	1.33	1.35	.15
Group 15:	13.94	1.25	1.33	1.35	.15
Group 16:	14.04	1.25	1.33	1.35	.15
Group 17:	14.14	1.25	1.33	1.35	.15
Group 18:	14.44	1.25	1.33	1.35	.15
Group 19:	14.94	1.25	1.33	1.35	.15

TRUCK DRIVERS

Group 1: Warehouseman and Teamster

Group 2: Driver or vehicle or combinations of vehicles of 2 axles (including all vehicles less than six tons); Traffic Control Pilot Car, excluding moving heavy equipment permit load

Group 3: Truck mounted Power Broom

Group 4: Drivers of vehicles or combination of vehicles of 3 axles

Group 5: Bootman; Cement Distributor; Fuel Truck; Road Oil Spreader Truck; Water Truck, 2 axle

Group 6: Dump, of less than 16 yards

Group 7: Transit-mix, under 3 yards; Dumpcrete, less than 6½ yards

Group 8: Truck Repairman Helper

Group 9: Water Truck, 3 or more axles

Group 10: PB and similar type truck when performing within the Teamsters' jurisdiction; Pipeline and Utility working Truck including Winch, but limited to truck applicable to Pipeline and Utility Work, where a composite crew is used; Slurry Driver; Truck Greaser and Tireman (50¢ per hour additional for Tireman)

Group 11: Transit-mix, 3 yards or more; Dumpcrete, 6½ yards and over

Group 12: Driver of vehicle or combination of vehicles of 4 or more axles

Group 13: Dump, 16 yards but less than 25 yards

Group 14: A-Frame or Swedish Crane, or similar type of equipment driver; Fork Lift Driver; Ross Carrier, highway

Group 15: All-off-highway Equipment within Teamsters jurisdiction (off highway combination of vehicles or equipment with multiple power sources, $1.00 per hour additional); Dump, 25 yards or more; Truck Repairman

Group 16: Truck Repairman Welder

Group 17: Low Bed driver, 9 axle or over

Group 18: Water pull, single engine with attachments

Group 19: Water pull, twin engine with attachments

SUPERSEDEAS DECISION

STATE Missouri COUNTIES: Pettis and Saline
DECISION No.: MO80-4093 DATE: Date of Publication
Supersedes Decision No. MO79-4071 dated August 3, 1979 in 44 FR 45847
DESCRIPTION OF WORK: Building projects, (excluding single family homes and apartments up to and including 4 stories).

	Basic Hourly Rates	Fringe Benefits Payments			
		H & W	Pensions	Vacation	Education and/or Appr. Tr.
ASBESTOS WORKERS	$13.27	.60	1.55		.05
BOILERMAKERS	13.87	1.375	1.10		.05
BRICKLAYERS, Stonemasons, tile layers	11.70		.35		
CARPENTERS (Pettis County):					
Carpenters	10.85	.53	.20		.08
Millwrights	11.45	.53	.20		.08
Piledrivers	11.075	.53	.20		.08
CARPENTERS (Saline County):					
Carpenters	12.05	.60	.50		.07
Millwrights & piledrivermen	12.80	.60	.50		.07
CEMENT MASONS	11.68				
ELECTRICIANS (Pettis County):					
Contracts not exceeding 2000 man hours	13.68	.69	3%+.90	7%.95	.12
Contracts exceeding 2000 man hours	14.68	.69	3%+.90	7%.95	.12
Electricians (Saline County):					
Contracts not exceeding 2000 man hours	13.08	.69	3%+.90	7%.95	.12
Contracts exceeding 2000 man hours	14.68	.69	3%+.90	7%.95	.12
ELEVATOR CONSTRUCTORS:					
Elevator constructors	14.135	1:195	.95	8%+a	
Elevator constructors' helpers	70%JR	1:195	.95	8%+a	
GLAZIERS	11.18	.61	1.04	19.7%	.04
IRONWORKERS	12.35	.80	1.50	1.00	.05
PAINTERS:					
Brush	11.25				
Spray; Sandblasting	12.25				
Machine taping; outside work on swing stages, window jacks, with belts or boatswain's chair	11.75				
PIPEFITTERS	14.54	.72	1.60		.10
PLASTERERS	11.36				
PLUMBERS	14.52	1.12	1.20		.12
ROOFERS	13.05	.75	.75		.14

	Basic Hourly Rates	Fringe Benefits Payments			
		H & W	Pensions	Vacation	Education and/or Appr. Tr.
SHEET METAL WORKERS	$12.73	.75	1.20		.10
LATHERS	10.85				
MARBLE & TILE SETTERS	13.45	5%	5%		
MARBLE & TILE SETTERS FINISHERS	10.85				
TERRAZZO WORKERS	12.31	5%	4.25%		
LABORERS (Pettis County):					
GROUP 1	8.725	.60	.60		.10
GROUP 2	8.825	.60	.60		.10
GROUP 3	9.00	.60	.60		.10

LABORERS CLASSIFICATION DEFINITIONS

GROUP 1 - Carpenter tenders; track men; wreckers (alterations or entire project); reinforcing rod carriers; all other general laborers.
GROUP 2 - Plumber laborers; stonemasons tenders; air tool operators; sewer work; water lines; conduit pipe; drain tile & duct lines; batter board run or pipe & ditch work, pier hole men working below ground; vibrator man; scaleman; jackhammer; chipping hammer operators; material batch hopper man; spreader or screed man on asphalt machine; brush feeders on pulverizers; winging scaffold; cement handlers (bulk or sack); laser beam man; chain or concrete saw
GROUP 3 - Plaster tenders; hod carriers; brick tenders; cutting torch & burner men; asphalt rakers; barco tamper; jackson or any similar tamps; power buggy operator; powderman; mastic kettlemen; sandblasting & gunnite nozzleman; head pipe layer on sewer work; men working in tunnels; head form setters & stringline men; hot tar applicator

	Basic Hourly Rates	Fringe Benefits Payments			
		H & W	Pensions	Vacation	Education and/or Appr. Tr.
LABORERS (Saline County):					
GROUP 1	10.55	.45	.40		.10
GROUP 2	10.70	.45	.40		.10
GROUP 3	10.85	.45	.40		.10

LABORERS CLASSIFICATION DEFINITIONS

GROUP 1 - Common labor; wire mesh handlers or setters, carpenter tender; trackmen; flagmen; signalmen; salamander tenders; floor cleaners; landscape men; sod layers; wreckers (for alteration or entire projects
GROUP 2 - Plumber laborers (conduit pipe, sewer work , drain tile & duct lines, digging & back filling); power tool operators; pier hold diggers (over 10 ft.); vibrator, jackhammer & chipping hammer operators; chain saw operators, concrete saw operators; brush feeders on pulverizers; reinforcing steel handlers;air tamp operators; ditch witch operators; swinging scaffolds; cutting torch or burner men; georgia buggies (self-propelled): fork lift, hoseman; insulation men
GROUP 3 - Fork lift (masonry); brick tenders; plasterer tenders; stone mason tenders; barco, Jackson or similar tamp operators; asphalt raker; powdermen; mastic hot kettlemen; sandblasting & gunite nozzle men; wagon & churn drill operators

	Basic Hourly Rates	Fringe Benefits Payments			
		H & W	Pensions	Vacation	Education and/or Appr. Tr.
POWER EQUIPMENT OPERATORS:					
Building Construction (Zone 1)					
GROUP I	$13.10	.85	1.00	1.05	.15
GROUP II	12.75	.85	1.00	1.05	.15
GROUP III:					
(a)	9.75	.85	1.00	1.05	.15
(b)	10.85	.85	1.00	1.05	.15
(c)	10.35	.85	1.00	1.05	.15
(d)	11.10	.85	1.00	1.05	.15
GROUP IV	13.35	.85	1.00	1.05	.15
GROUP V	13.00	.85	1.00	1.05	.15
GROUP VI	13.60	.85	1.00	1.05	.15
GROUP VII:					
(a)	12.85	.85	1.00	1.05	.15
(b)	12.60	.85	1.00	1.05	.15
(c)	10.60	.85	1.00	1.05	.15
GROUP VIII	14.10	.85	1.00	1.05	.15
GROUP IX	13.60	.85	1.00	1.05	.15

CLASSIFICATION DEFINITIONS

POWER EQUIPMENT OPERATORS

GROUP I - Asphalt paver and spreader; asphalt plant mixer operator; asphalt plant operator; back fillers; backhoe; barber-greene load-loader; blade-power; boats-power; boilers (2); boring machines; cableways; cherry pickers; chip spreader; concrete ready-mixed plant, portable (job site); concrete mixer paver; crane-overhead; crusher, rock; derricks and derricks cars (power operated); ditching machines; dozers; dredges - any type power; grade-all - similar type; hoist, endless chain-power operated with power travel; loaders; mechanic and welder; mucking machine; orange peels; pumps - material; push cats; scoops; self-propelled rotary drill; shovel, power; side boom; skimmer scoop; testhole machine; throttle man

GROUP II - Boilers (1); Brooms - power operated; chip spreader (front man); clef plane operator; compressors (1) 125' or over; concrete saws, self-propelled); crab - power operated; curb finishing machine; firemen on rigs; flex plane; floating machine; form grader; greaser; hoist, endless chain - power operated; hopper - power operated; hydra hammer; lad-a-vator - similar type; rollers; siphons, jets, and jennies; sub-grader; tractors over 50 h.p.; compressors (2) 125' ft. or over not more than 20' apart; compressors-tandem; compressors single, truck mounted; elevator; finishing machine

GROUP III:
(a) Oilers
(b) Fork lift-masonry
(c) Oiler driver
(d) A-frame trucks; fork lift-all types (except masonry); mixers (w/side loaders); pumps (w/well points) dewatering systems, test or pressure pumps; tractors (except when hauling material) less than 50 h. p.

GROUP IV
Clamshells, 80 ft. of boom or over (inc. jib); crane or rigs; 80 ft. of boom or over (inc. jib); draglines; 80 ft. of boom or over (inc. jib); pile drivers, 80 ft. of boom or over (incl. jib)

GROUP V
Hoists-each additional drum over 1 drum

GROUP VI
Crane or rigs, over 200 ft. of boom

GROUP VII
Ready Mixed Concrete Plants:
(a) Crane operator
(b) Loader operator & plant man
(c) Conveyor operator

GROUP VIII
Master Mechanic

GROUP IX
Crane-tower or climbing

Unlisted classification needed for work not included within the scope of the classifications listed may be added after award only as provided in the labor standards contract clauses (29 CFR 515(a)(i)(ii))

SUPERSEDEAS DECISION

STATE: Missouri COUNTY: Pulaski
DECISION NO.: MO80-4094 DATE: Date of Publication
Supersedes Decision No. MO80-4040 dated June 13, 1980 in 45 FR 40418
DESCRIPTION OF WORK: Building Projects (excluding single family homes and apartments up to and including 4 stories)

	Basic Hourly Rates	Fringe Benefits Payments			
		H & W	Pensions	Vacation	Education and/or Appr. Tr.
ASBESTOS WORKERS	$12.82	.50	1.00		.04
BOILERMAKERS	14.02	1.375	1.10		.05
BRICKLAYERS, Stonemasons & Tile Layers	11.70		.35		
CARPENTERS:					
Projects under $250,000.00	10.46	.70	.80	.50	.02
Projects $250,000.00 & over	10.96	.70	.80	.50	.02
ELECTRICIANS:					
Electricians	12.795	.47	3%+1.00	6%	.02
Cable splicers	13.195	.47	3%+1.00	6%	.02
IRONWORKERS, structural, ornamental, reinforcing	13.575	.55	1.05		.09
LABORERS:					
Laborers, general	9.65	.60	.50		.10
Plumbers laborers, hod carriers, plaster tenders & mason tenders	10.00	.60	.50		.10
Powderman	10.65	.60	.50		.10
LATHERS	11.45				
PAINTERS:					
Brush & roller	10.25	1.00	.70	.50	
Taping, paperhanging & floor work	10.75	1.00	.70	.50	
Spray, structural steel & sandblasting	11.50	1.00	.70	.50	
PIPEFITTERS	14.05	2.435	1.64		
PLUMBERS	13.255	.80	.95	.90	.20
ROOFERS	7.90	.46	.20		
SHEET METAL WORKERS	11.94	.56+3%	.76	.96	.04
TRUCK DRIVERS:					
GROUP 1	8.50	.50	.50		
GROUP 2	8.90	.50	.50		
GROUP 3	8.97	.50	.50		
GROUP 4	9.02	.50	.50		
GROUP 5	9.17	.50	.50		
GROUP 6	10.00	.50	.50		
CEMENT MASONS	12.30				

	Basic Hourly Rates	Fringe Benefits Payments			
		H & W	Pensions	Vacation	Education and/or Appr. Tr.
TRUCK DRIVERS:					
Ft. Leonard Wood Only:					
GROUP 1	9.50	.50	.50		
GROUP 2	9.65	.50	.50		
GROUP 3	9.72	.50	.50		
GROUP 4	9.77	.50	.50		
GROUP 5	9.92	.50	.50		
GROUP 6	10.75	.50	.50		

TRUCK DRIVERS CLASSIFICATION DEFINITIONS

GROUP 1 - flat bed drivers; pick-ups and station wagons; tireman & station attendant; dump, single axle

GROUP 2 - Flat bed, tandem axle; dump, tandem; tank trucks, single axle

GROUP 3 - Agitator & transit-mix

GROUP 4 - Winch trucks; steel haulers, derrick & A-trucks; distributors drivers & operators; tank truck; tandem & semi-tractors; wheel tractors; oilers, greasers & mechanic helpers; heavy excavating & hauling euclids, dumpsters, etc.

GROUP 5 - Fork lifts & high lifts, etc., when unloading or carrying

GROUP 6 - Mechanics

	Basic Hourly Rates	Fringe Benefits Payments			
		H & W	Pensions	Vacation	Education and/or Appr. Tr.
POWER EQUIPMENT OPERATORS:					
GROUP 1	12.12	.75	1.00		
GROUP 2	12.12	.75	1.00		
GROUP 3	10.87	.75	1.00		
GROUP 4	10.27	.75	1.00		
GROUP 5:					
(a)	12.82	.75	1.00		
(b)	13.67	.75	1.00		
(c)	14.12	.75	1.00		
(d)	14.87	.75	1.00		
(e)	17.62	.75	1.00		
GROUP 6	13.12	.75	1.00		

POWER EQUIPMENT OPERATORS CLASSIFICATION DEFINITIONS

GROUP 1 - Backhoe; cableway; crane, crawler or truck; crane, hydraulic truck or cruiser mounted 16 tons & over; crane, locomotive, derrick, steam; derrick car & derrick boat; dragline; dredge; gradall, crawler or tire mounted; locomotive, gas, steam & other powers; piledriver, land or floating; scoop, skimmer; shovel, power (steam, gas, electric or other powers); switch boat; whirley

GROUP 2 - Air tugger w/air compressor; anchor placing barge; asphalt spreader; athey force feeder loader (self-propelled): backfilling machine; boat oper. push boat or tow boat (job site); boiler, high pressure breaking in period; boom truck, placing or erecting; boring machine, footing foundation; bull-float; cherry picker; combination concrete hoist & mixer such as mixermobile; compressor (when operator runs throttle); compressors, two not more than 50' apart; compressor-generator combination; compressor pump combination; compressor welder combination; concrete breaker (truck or tractor mounted); concrete pump, such as pumperete machine; concrete spreader; conveyor, large (not self-propelled) hoisting or moving brick & concrete into, or into & on floor level, one or both; crane, hydraulic rough terrain, self-propelled; crane, hydraulic truck or cruiser mounted under 16 tons; drilling machines, self-powered, used for earth or rock drilling or boring (wagon drills & any hand drills obtaining power from other sources including concrete breakers, jackhammers & barco equipment no engineer required); elevating grader, engine man, dredge; excavator or powerbelt machine; finishing machine, self-propelled oscillating screed; fork lift; grader, road with power blade; highlift; hoist, concrete & brick (brick cages or concrete skips operating in or on tower, tower mobile, or similar equipment); hoist, stack; hydro hammer; lad-a-vator, hoisting brick or concrete; loading machine (such as Barber-Greene); mechanic, on job site; mixer, paving; mixer-mobile; mucking machine; pipe wrapping machine; plant, asphalt; plant, concrete producing or ready-mix job site; plant, heating job site; plant, mixing job site; plant, power, generating job site; pumps, two self-power over 2" through 6"; pumps, electric submersible, one through three, over 4"; quad-track; roller, asphalt, top or subgrade; scoop, tractor drawn; spreader box; subgrader; tie tamper; tractor-crawler, or wheel type with or without power unit, power take offs, & attachments regardless of size; trenching machine, tunnel boring machine, vibrating machine, automatic, propelled; welding machines (gasoline or diesel) more than one but not over four (regardless of size); well drilling machine

GROUP 3 - Air tugger w/plant air; boiler, for power or heating shell of buildings or temporary enclosures in connection with construction work; boiler, temporary; compressor, air one; compressor, air (mounted on truck); concrete saw, (self-propelled); conveyor, large (not self-propelled) conveyor, large (not self-propelled) paving brick & concrete (distributing) on floor level; curb finishing machine, ditch paving machine; elevator (building construction or alteration); endless chain hoist; fireman; form grader; generator, one over 30 KW or any number developing over 30

POWER EQUIPMENT OPERATORS CLASSIFICATION DEFINITIONS (Cont'd)

GROUP 3 CONTD:
KW; greaser; hoist, one drum regardless of size (except brick or concrete); lad-a-vator; manlift; mixer, asphalt, over 8 cu. ft. capacity; mixer, if two or more mixers of one bag capacity or less are used by one Employer on job, an operator is required; mixer, without side loader, 2 bag capacity or more; mixers, with side loader, 2 bag capacity or more; mixer, with side loader, regardless of size; not paver; oiler on dredge; oiler on truck crane; pug mill operator; pump, sump-self-powered, automatic controlled over 2" during use in connection with construction work; scissor lift (used for hoisting); sweeper, street; tractor small wheel type 50 h.p. & under with grader blade & similar equipment; welding machine, one over 400 amp.; winch operating from truck; mechanic in shop

GROUP 4 - Boat operator outboard motor (job site); conveyors; such as con-vay-it) regardless of how used; oiler; sweeper, floor

GROUP 5 (a) - Air pressure; oiler engineer operating under ten pounds
(b) - Air-pressure; oiler engineer operating over ten pounds
(c) - Air pressure engineer operating under ten pounds
(d) - Air pressure oiler engineer operating over ten pounds
(e) - Crane, climbing (such as linden); crane, pile driving & extracting; crane, using rock socket tool; derrick, diesel, gas or electric, hoisting material erecting steel (150" or more above ground); dragline, 7 cu. yds. & over; hoist, three or more drums in use; scoop; tandem; shovel, power 7 cu. yds. & over; tractor; tandem crawler, tunnel man assigned to work in tunnel or tunnel shaft; wrecking; when machine is working on second or higher; crane-booms (including jib) 100 ft. to 150 feet

GROUP 6 - Crane, boom (including jib) 150 feet to 300 feet

Unlisted classifications needed for work not included within the scope of the classifications listed may be added after award only as provided in the labor standards contract clauses (29 CFR, 5.5 (a)(1)(ii).

SUPERSEDEAS DECISION

STATE: New Mexico COUNTY: Statewide
DECISION NO: NM80-4090 DATE: DATE OF PUBLICATION
Supersedes Decision No. NM80-4057 dated July 18, 1980 in 45 FR 63443

DESCRIPTION OF WORK: General Building and Heavy Engineering construction shall include the construction, alteration, repair and demolition of buildings, including residential buildings; office buildings, warehouses, industrial and commercial buildings; institutional and public buildings, and all airconditioning, conduit, heating and other mechanical and electrical works and site preparation for building or heavy engineering projects under this classification; stadia; and shall include electrical, gas, water, sewer lines, and other such utility construction which are part of projects under this classification and included within the property line or less than five (5) feet from the building or heavy engineering structure, whichever is closer, provided, however, regard to electrical utilities such construction shall include construction from the first attachment of incoming power source without regard to the property line or proximity to the building or the heavy engineering structure; and include construction, alteration, repair and demolition of heavy engineering work such as power generating plants, pump stations, natural gas compressing stations; covered reservoirs and covered sewage and water treatment facilities; concrete linings for canals; ditches and channels; concrete dams; earth dams of one million (1,000,000) cubic yards or over; radio towers, ovens, furnaces, kilns, silos, shafts and tunnels (other than highway shafts and tunnels), hydroelectric projects; and well drilling, telephone and electrical transmission lines which are part of general building and heavy engineering projects; mining appurtenances such as tipples, washeries and loading and discharging chutes, and specialized structures for testing, launching and recovering space and other rocket-type missiles, (ALSO INCLUDING RESIDENTIAL PROJECTS IN SANTA FE, BERNALILLO, RIO ARRIBA TAOS, SANDOVAL AND VALENCIA COUNTIES).

BUILDING & HEAVY CONSTRUCTION	Basic Hourly Rates	Fringe Benefits Payments			
		H & W	Pensions	Vacation	Education and/or Appr. Tr.
ASBESTOS WORKERS:					
(Statewide, except Union, Lea, Harding, Curry, Roosevelt and Quay Cos.)	$14.41	.50	1.45		.06
Union, Harding, Lea, Roosevelt, Curry and Quay Cos.	11.95	.80	1.25		.02
BOILERMAKERS	11.65	1.275	1.25	.75	.04
BRICKLAYERS -STONEMASONS:					
Zone I-A	12.31	.77	.40		.10
Zone I-B	13.81	.77	.40		.10
Zone I-C	14.66	.77	.40		.10
Zone II	12.40	.77	.50		.10
Zone III	13.90	.77	.50		.10
Zone IV	12.51	.77	.40		.10
Zone V	14.01	.77	.40		.10
Zone VIA	11.81	.77	.40		.10
Zone VIB	13.31	.77	.40		.10
Zone VII	12.41	.77	.40		.10
Zone VIII	13.54	.77	.30		.10
Zone IX	11.79	.77	.30		.10

BRICKLAYERS' ZONE DEFINITIONS

ZONE I - Union, Harding, Santa Fe, Valencia, Torrance, Taos, Socorro, McKinley, Sandoval, Catron, San Miguel, San Juan, Cibola, Rio Arriba, Bernalillo and Los Alamos Counties
From basing point of Albuquerque Main Post Office:
Zone I-A - 0 to 25 road miles
Zone I-B - 25 to 50 road miles
Zone I-C - Over 50 road miles
ZONE II - Curry and Roosevelt Counties
ZONE III - DeBaca, Guadalupe and Quay Counties
ZONE IV - Chaves County
ZONE V - Lincoln County
ZONE VIA - Lea and Eddy Counties (Except at Mine and Refinery sites outside Municipal Limits)
ZONE VIB - Lea and Eddy Counties (Employees at Mine and Refinery sites outside Municipal Limits)
ZONE VII - Otero Counties
ZONE VIII - Luna and Grant Counties, communites of Silver City, Bayard, Central, Hurley and new town site of Tyrone; Hidalgo and Sierra Counties
ZONE IX - Dona Ana County

BUILDING & HEAVY CONSTRUCTION	Basic Hourly Rates	Fringe Benefits Payments			
		H & W	Pensions	Vacation	Education and/or Appr. Tr.
CARPENTERS:					
Dwelling houses & apartments not to exceed two stories in height:					
Zone I-A	8.15	1.10	1.35		.20
Zone I-B	9.65	1.10	1.35		.20
Zone I-C	10.40	1.10	1.35		.20
General Building, Heavy & Residential Construction (Dwelling houses and apartments over two stories in height):					
Zone 2-A	12.05	1.10	1.35		.20
Zone 2-B	13.55	1.10	1.35		.20
Zone 2-C	14.30	1.10	1.35		.20

CARPENTERS' ZONE DEFINITIONS

CARPENTER (STATEWIDE) - From nearest basing points of the following cities of Towns: Alamogordo, Albuquerque, Artesia, Bayard, Belen, Carlsbad, Clovis, Deming, Espanola, Eunice, Farmington, Gallup, Grants, Hobbs, Las Cruces, Las Vegas, Lordsburg, Lovington, Portales, Raton, Roswell, Ruidoso, Santa Fe, Santa Rosa, Silver City, Socorro, Taos, and Tucumcari:
ZONE I - Dwelling houses & apartments not to exceed two stories in height:
Zone I-A - 0 - 15 road miles from nearest basing point
Zone I-B - 15 to 35 road miles from nearest basing point
Zone I-C - Over 35 road miles from nearest basing point
ZONE II - General Building & Heavy Construction & Residential Construction (Dwelling houses & apartments over two stories in height:
Zone 2-A - 0 - 15 road miles from nearest basing point
Zone 2-B - 15 to 35 road miles from nearest basing point
Zone 2-C - Over 35 road miles from nearest basing point

CARPENTERS - San Juan County Only					
Zone I	12.05	1.10	1.35		.20
Zone II	14.30	1.10	1.35		.20
Zone III	14.30	1.10	1.35		.20

SAN JUAN COUNTY ZONE DEFINITIONS FOR CARPENTERS

ZONE I - Within 15 road miles of the City of Farmington
ZONE II - More than 15 miles, but less than 35 miles from Farmington
ZONE III - 35 miles or more from the City of Farmington

	Basic Hourly Rates	Fringe Benefits Payments			
		H & W	Pensions	Vacation	Education and/or Appr. Tr.
CEMENT MASON:					
Area I	$10.37	.77	.70		.20
Area II:					
Zone 1	10.37	.77	.70		.20
Zone 2	11.87	.77	.70		.20
Zone 3	12.12	.77	.70		.20
Cement masons (Residential)		.77	.70		.20
Cement masons (Heavy)	10.47	.77	.70		.20
CEMENT MASONS:					
Composition & Machine Oprs.					
Area I	10.62	.77	.70		.20
Area II:					
Zone 1	10.62	.77	.70		.20
Zone 2	12.12	.77	.70		.20
Zone 3	12.37	.77	.70		.20

CEMENT MASONS AREA DEFINITIONS

AREA I - Statewide except Farmington, San Juan County

AREA II - Farmington, San Juan County
Zone I - 0 - 15 miles from Farmington City Hall
Zone II - 15-35 miles from Farmington City Hall
Zone III - 35 miles and over from Farmington City Hall

	Basic Hourly Rates	Fringe Benefits Payments			
		H & W	Pensions	Vacation	Education and/or Appr. Tr.
ELECTRICIANS:					
Zone I					
1-A	$13.45	.60	3%+.70		3/4%
1-B	14.53	.60	3%+.70		3/4%
1-C	15.33	.60	3%+.70		3/4%
1-D	16.81	.60	3%+.70		3/4%
Zone II	15.33	.60	3%+.70		3/4%
Zone III					
3-A	10.90	.60	3%		1/10%
3-B	12.35	.60	3%		1/10%
Zone IV					
4-A	12.95	.60	3%		.01
4-B	13.40	.60	3%		.01
4-C	13.55	.60	3%		.01
4-D	13.80	.60	3%		.01

	Basic Hourly Rates	Fringe Benefits Payments			
		H & W	Pensions	Vacation	Education and/or Appr. Tr.
CABLE SPLICERS:					
Zone I					
1-A	$14.80	.60	3%+.70		3/4%
1-B	15.88	.60	3%+.70		3/4%
1-C	16.68	.60	3%+.70		3/4%
1-D	18.16	.60	3%+.70		3/4%
Zone II	16.68	.60	3%+.70		3/4%
Zone III					
3-A	11.15	.60	3%		1/10%
3-B	12.60	.60	3%		1/10%
Zone IV					
4-A	13.30	.60	3%		.01
4-B	13.75	.60	3%		.01
4-C	13.90	.60	3%		.01
4-D	14.15	.60	3%		.01

ELECTRICIANS-CABLE SPLICERS ZONE DEFINITIONS

ZONE I
Area 1 - Bernalillo, Santa Fe, Torrance, DeBaca, Guadalupe, Quay, San Miguel, Mora, Harding, Union, Colfax, Taos, Rio Arriba, Grant, Sandoval, Valencia, Socorro, Catron, McKinley, Sierra, San Juan, Chaves, Curry, Lincoln and Roosevelt Counties
Area 1-A - From nearest basing point cities, towns and mileage from main post office in the following towns:
Albuquerque - 15 miles from main post office
Santa Fe - 15 miles from main post office
Las Vegas - 8 miles from main post office
Farmington - 8 miles from main post office
Raton - 6 miles from main post office
Tucumari - 6 miles from main post office
Aztec - 6 miles from main post office
Roswell - 12 miles from main post office
Ruidoso - 12 miles from main post office
Portales - 12 miles from main post office
Carrizozo - 12 miles from main post office
Clovis - 12 miles from main post office
Gallup - 10 miles from main post office
*Pojoaque - 2 miles from main post office
*All areas adjacent to Pojoaque that are over two (2) miles distant from the main post office in that town will be zoned out of Santa Fe.

ZONE I CONTD:
Area 1-B - extending up to 20 miles beyond Area 1-A

Area 1-C - extending up to 30 miles from Area 1-A

Area 1-D - anything beyond 30 miles from Area 1-A
ZONE II - Los Alamos County
ZONE III - Dona Ana, Otero, Luna, Hidalgo Counties
Zone 3-A - Within 10 miles radius from the post office in Las Cruces and within a 5 mile radius from the post office in Alamogordo.
Zone 3-B - Dona Ana, Otero, Luna, and Hidalgo Counties (except that area specified in Zone 3-A)
ZONE IV - Eddy and Lea Counties - the following zones shall be designated from the main post office in Artesia, Carlsbad, Hobbs and Lovington:
Zone 4-A - 0 -12 miles from main post office
Zone 4-B - 12 - 22 miles from main post office
Zone 4-C - 22 - 40 miles beyond main post office
Zone 4-D - 40 miles and beyond main post office

	Basic Hourly Rates	Fringe Benefits Payments			
		H & W	Pensions	Vacation	Education and/or Appr. Tr.
ELEVATOR CONSTRUCTORS: Bernalillo, Catron, Colfax, Curry, DeBaca, Guadalupe, Harding, Lincoln, Los Alamos, McKinley, Mora, Quay, Rio Arriba, Roosevelt, Sandoval, San Juan, San Miguel, Santa Fe, Socorro, Taos, Torrance, Union and Valencia Cos.:					
Elevator constructors	12.98	1.195	.82	4%+b+c	.035
Elevator constructors helpers	70%JR	1.195	.82	4%+b+c	.035
Chaves, Hidalgo, Dona Ana, Eddy, Grant, Lea, Luna, Otero and Sierra Cos.:					
Elevator constructors	8.88	.895	.69	4%+b+c	.035
Elevator constructors helper	70%JR	.895	.69	4%+b+c	.035
GLAZIERS	9.79	.70	.30		.04

	Basic Hourly Rates	Fringe Benefits Payments			
		H & W	Pensions	Vacation	Education and/or Appr. Tr.
IRONWORKERS:					
ZONE I	$12.55	.90	1.45		.18
ZONE II					
Area 1	12.55	.90	1.45		.18
Area 2	13.80	.90	1.45		.18
Area 3	14.55	.90	1.45		.18
Area 4	15.80	.90	1.45		.18
ZONE III	11.80	.55	1.65		.15
ZONE IV	12.80	.55	1.65		.15

IRONWORKERS ZONE DEFINITIONS

ZONE I - Bernalillo, Catron, Colfax, DeBaca, Guadalupe, Lincoln, Los Alamos, McKinley, Mora, Rio Arriba, Sandoval, Santa Fe, Socorro, Taos, Torrance, and Valencia Counties
ZONE II - Farmington, San Juan County
Area 1 - Shall extend a distance of 6 road miles inclusive beyond the City Hall
Area 2 - Shall extend a distance of 8 road miles inclusive beyond the outer perimeter of area 1
Area 3 - Shall extend a distance of 10 road miles inclusive beyond the outer limits of area 2
Area 4 - Shall extend a distance of 27 road miles inclusive beyond the outer limits of area 3
Other areas not within Area 1, 2, 3, and 4 shall revert to the $15.00 per day subsistence rate.
ZONE III - Dona Ana, county with the exception of that portion of the county that lies within the White Sands Missile Range; Chaves County, Eddy County except that Potash Basin and defined as the area 10 road miles on Highway 62 and Highway 180, east of Carlsbad.
ZONE IV - Curry, Harding, Quay, Union, Hidalgo, Grant, Lea, Luna, Otero and Sierra Counties; also Potash Basin, White Sands and McGregor Missile Ranges.

LABORERS: BUILDING					
Group I	8.18	.63	.80		.10
Group II	8.48	.63	.80		.10
Group III	8.48	.63	.80		.10
Group IV	8.78	.63	.80		.10
Group V	8.93	.63	.80		.10

LABORERS BUILDING CONSTRUCTION (FARMINGTON AREA - ONLY)
ZONE 1 - 0-15 miles from the City Hall in Farmington
ZONE II - 15-35 miles from the City Hall in Farmington
ZONE III- 35 miles and over from the City Hall in Farmington

FARMINGTON AREA ONLY LABORERS (BUILDING CONST.)	Basic Hourly Rates	Fringe Benefits Payments			
		H & W	Pensions	Vacation	Education and/or Appr. Tr.
ZONE I					
Group 1	$ 8.18	.63	.80		.10
Group 2	8.48	.63	.80		.10
Group 3	8.78	.63	.80		.10
Group 4	8.93	.63	.80		.10
ZONE II					
Group 1	9.28	.63	.80		.10
Group 2	9.58	.63	.80		.10
Group 3	9.88	.63	.80		.10
Group 4	10.03	.63	.80		.10
ZONE III					
Group 1	9.78	.63	.80		.10
Group 2	10.08	.63	.80		.10
Group 3	10.38	.63	.80		.10
Group 4	10.53	.63	.80		.10

BUILDING LABORERS CLASSIFICATION DEFINITION

GROUP I - Unskilled; building and common laborers, carpenter tenders, concrete workers, chainmen - stakedrivers, concrete buggy operators
GROUP II - Semi-skilled; air and power tool operator, asphalt rakers, demolition, gunite, rebound men, fog machine operator, power buggy operators, rodmen; sand blasterers (pot men), window washers, wagon, core diamond drillers tender; outside scaler, grade setter
GROUP III - Wagon core, diamond drillers
GROUP IV - Concrete burner, cement mason tenders, hod carriers, mortar mixers, plaster spreader operators, plaster tenders, gunite nozzlemen, pipelayers, pumpcrete nozzlemen
GROUP V - Powdermen and blasterers

LABORERS (HEAVY CONSTRUCTION AND SITE PREPARATION & DIRT WORK)

ZONE I - Statewide including 15 miles from Farmington Hall
ZONE II - 15 to 35 miles from Farmington Hall
ZONE III - 35 miles and over from Farmington Hall

LABORERS (HEAVY CONSTRUCTION)	Basic Hourly Rates	Fringe Benefits Payments			
		H & W	Pensions	Vacation	Education and/or Appr. Tr.
ZONE I					
Group 1	$ 8.18	.63	.80		.10
Group 2	8.48	.63	.80		.10
Group 3	8.58	.63	.80		.10
Group 4	8.78	.63	.80		.10
Group 5	8.93	.63	.80		.10
ZONE II					
Group 1	9.68	.63	.80		.10
Group 2	9.98	.63	.80		.10
Group 3	10.08	.63	.80		.10
Group 4	10.28	.63	.80		.10
Group 5	10.43	.63	.80		.10
ZONE III					
Group 1	10.18	.63	.80		.10
Group 2	10.48	.63	.80		.10
Group 3	10.58	.63	.80		.10
Group 4	10.78	.63	.80		.10
Group 4	10.93	.63	.80		.10
LABORERS (SITE PREPARATION AND DIRT WORK)					
ZONE I					
Group 1	7.61	.63	.77		.10
Group 2	7.91	.63	.77		.10
Group 3	8.01	.63	.77		.10
Group 4	8.21	.63	.77		.10
Group 5	8.36	.63	.77		.10
ZONE II					
Group 1	8.11	.63	.77		.10
Group 2	8.41	.63	.77		.10
Group 3	8.51	.63	.77		.10
Group 4	8.71	.63	.77		.10
Group 5	8.86	.63	.77		.10
ZONE III					
Group 1	8.61	.63	.77		.10
Group 2	8.91	.63	.77		.10
Group 3	9.01	.63	.77		.10
Group 4	9.21	.63	.77		.10
Group 5	9.36	.63	.77		.10

LABORERS (HEAVY CONSTRUCTION, SITE PREPARATION AND DIRT WORK)

CLASSIFICATION DEFINITIONS

GROUP I - Unskilled - Construction and general laborers, carpenter tenders, concrete workers, stakedrivers, concrete buggy operators

GROUP II - Semi-skilled - Air and power tool operators, asphalt rakers, cutting torch operators, demolition, gunite rebound men, rod and chainmen, grade setters, power buggy operators, sand blasters (pot men), nozzlemen, wagon core and diamond drillers' tenders, outside sealers, fog machine operators

GROUP III - Wagon core, diamond drillers

GROUP IV - Miscellaneous - concrete burner, cement mason tenders, hod carriers, mortar mixers, plaster spreader operators, plaster tenders, gunite nozzlemen, pipelayers, pumpcrete nozzleman

GROUP V - Powdermen and blasters

	Basic Hourly Rates	Fringe Benefits Payments			
		H & W	Pensions	Vacation	Education and/or Appr. Tr.
LABORERS RESIDENTIAL CONSTRUCTION					
Group I	5.02	.63	.80		.10
Group II	5.32	.63	.80		.10
Group III	5.62	.63	.80		.10

RESIDENTIAL LABORERS' CLASSIFICATION DEFINITIONS

GROUP I - Unskilled - Building and common laborers, carpenter tenders, concrete workers, chainmen - stakedrivers, concrete buggy operators, hand

GROUP II - Semi-skilled - air and power tool operator, asphalt rakers, demolition, gunnite rebound men, fog machine operator, power buggy operator, rodmen, sand blasterers (pot men), window washers, wagon, core and diamond drillers, tender outside

GROUP III- Concrete burner, cement mason tenders, hod carriers, mortar mixers, plaster spreader operators, plaster tenders, gunnite nozzlemen, pipelayer, pumpcrete nozzlemen

	Basic Hourly Rates	Fringe Benefits Payments			
		H & W	Pensions	Vacation	Education and/or Appr. Tr.
LATHERS:					
Zone I	$12.05	1.10	1.30		.20
Zone II	13.55	1.10	1.30		.20
Zone III	14.30	1.10	1.30		.20

LATHERS

BASING POINTS & ZONE DEFINITIONS:

Alamogordo, Albuquerque, Antonia, Bayard, Belen, Carlbad, Clovis, Deming, Espanola, Eunice, Farmington, Gallup, Grants, Hobbs, Las Cruces, Las Vegas, Lordobango, Lovington, Portales, Raton, Roswell, Ruidoso, Santa Fe, Santa Rosa, Silver City, Socorro, Toos, Tucumcari.

LATHERS ZONE DEFINITIONS

ZONE 1 - Jobs within 15 miles of Base points
ZONE II - Jobs 15 to 35 miles
ZONE III - Jobs 30 miles and more

	Basic Hourly Rates	Fringe Benefits Payments			
		H & W	Pensions	Vacation	Education and/or Appr. Tr.
LEAD BURNERS					
Zone I	13.25	.68	1.42		.16
Zone II	13.75	.68	1.42		.16
Zone III	15.00	.68	1.42		.16
Zone IV	13.88	.68	1.42		.16

LEAD BURNERS BASING POINT & AREA DEFINITIONS

BASING POINT CITIES OR TOWNS:

Albuquerque, Alamorgordo, Anthony, Artesia, Belen, Carlsbad, Clovis, Deming, Espanola, Farmington, Gallup, Grants, Hobbs, Las Cruces, Las Vegas, Lovington, Portales, Raton, Socorro, Roswell, Ruidoso, Santa Fe, Silver City, Santa Rosa, Taos, Tucumcari and Truth of Consequence

Zone I - Shall include a distance of seven road miles inclusive beyond the city or town limits

Zone II - Shall extend a distance of 4 road miles inclusive beyond the outer perimeter of area I.

Zone III- Shall apply to all areas not within 1 or 2, or not within the specific areas.

Zone IV (SPECIFIC AREA) - Los Alamos, White Rock, South Mesa, McGregor Range, White Sands Missile Range, and/or Proving Grounds

COMMERCIAL LINE WORK

Bernalillo, Colfax, Catron, Chaves, Curry, DeBaca, Grant, Guadalupe, Harding, Lincoln, Los Alamos, McKinley, Mora, Quay, Rio Arriba, Roosevelt, Sandoval, San Juan, San Miguel, Santa Fe, Sierra, Socorro, Taos, Torrance, Union, Valencia and White Sands Missile Range and that portion of Fort Bliss in New Mexico

ZONE I

Cities and Towns Basing Points - Miles from Main Post Offices

Albuquerque - 15 miles
Santa Fe - 10 miles
Las Vegas - 8 miles
Farmington - 6 miles
Raton - 6 miles
Tucumcari - 6 miles
Aztec - 6 miles
Roswell - 12 miles
Ruidoso - 12 miles
Portales - 12 miles
Carrisozo - 12 miles
Clovis - 12 miles
Gallup - 12 miles
*Pojoaque - 2 miles

COMMERCIAL LINE WORK CONTD:

*All areas adjacent to Pojoaque that are over two miles distant from the main post office in that town will be zoned out of Santa Fe.

ZONE II - Extending up to 20 miles beyond Zone 1
Zone III - Extending up to 30 miles beyond Zone 1
Zone IV - Anything beyond 30 miles from Zone 1

	Basic Hourly Rates	Fringe Benefits Payments			
		H & W	Pensions	Vacation	Education and/or Appr. Tr.
COMMERCIAL LINE WORK					
ZONE I					
Linemen - technicians	$13.45	.60	3%+.70		½%
Cable splicers	14.80	.60	3%+.70		½%
Equipment Operator (includes helicopter op.)	12.78	.60	3%+.70		½%
Equipment mechanic (includes Helicopter mechanic)	11.70	.60	3%+.70		½%
Powderman	11.70	.60	3%+.70		½%
Groundman & Jackhammer Oprs.	9.55	.60	3%+.70		½%
ZONE II					
Linemen - technicians	14.53	.60	3%+.70		½%
Cable splicers	15.88	.60	3%+.70		½%
Equipment Opr. (includes Helicopter op.)	13.86	.60	3%+.70		½%
Equipment Mechanic (includes Helicopter mechanic)	12.78	.60	3%+.70		½%
Powderman	12.78	.60	3%+.70		½%
Groundman & Jackhammer Oprs.	10.63	.60	3%+.70		½%
ZONE III					
Linemen - technicians	15.33	.60	3%+.70		½%
Cable splicers	16.68	.60	3%+.70		½%
Equipment Opr. (includes helicopter op.)	14.66	.60	3%+.70		½%
Equipment Mechanic (includes Helicopter mechanic)	13.58	.60	3%+.70		½%
Powderman	13.58	.60	3%+.70		½%
Groundman & Jackhammer Oprs.	11.43	.60	3%+.70		½%
ZONE IV					
Linemen - technicians	16.81	.60	3%+.70		½%
Cable splicers	18.16	.60	3%+.70		½%
Equipment Opr. (includes helicopter op.)	16.14	.60	3%+.70		½%
Equipment Mechanic (includes helicopter mechanic)	15.06	.60	3%+.70		½%
Powderman	15.06	.60	3%+.70		½%
Groundman & Jackhammer Oprs.	12.91	.60	3%+.70		½%

Las Alamos County - Use ZONE III rates.

COMMERCIAL LINE WORK

Applies to switching stations and substations adjacent to power plants in Zone 1 and zone 2 in Luna, Dona Ana, Otero and Hidalgo Counties, exclusive of White Sands Missile Range and that portion of Fort Bliss in New Mexico.

ZONE I

The area within 25 miles radius from the downtown Post Office of El Paso, Texas. Fort Bliss and Biggs Field; the area within a five mile radius of any city, town or municipality within which an employer establishes or maintains his place of business; the area within ten mile radius from the post office in Las Cruces, New Mexico, and within a five mile radius from the post office in Alamogordo, New Mexico.

ZONE II

All other areas of the jurisdiction except those specified in zone 1

	Basic Hourly Rates	Fringe Benefits Payments			
		H & W	Pensions	Vacation	Education and/or Appr. Tr.
ZONE I					
Linemen - technicians	$10.15	.60	3%		½%
Cable splicers	10.40	.60	3%		½%
Equipment opr. (includes helicopter opr.)	9.64	.60	3%		½%
Equipment mechanic (includes helicopter mechanic)	8.93	.60	3%		½%
Powderman	8.93	.60	3%		½%
Groundman & Jackhammer Oprs.	7.21	.60	3%		½%
ZONE II					
Linemen - technicians	11.60	.60	3%		½%
Cable splicers	11.85	.60	3%		½%
Equipment Opr. (includes helicopter opr.)	11.02	.60	3%		½%
Equipment Mechanic (includes helicopter mechanic)	10.21	.60	3%		½%
Powderman	10.21	.60	3%		½%
Groundman & Jackhammer Oprs.	8.24	.60	3%		½%

COMMERCIAL LINE WORK

Applies to switching stations adjacent to power plants in Eddy and Lea Counties; the following zones listed shall be designated from main Post Office of Artesia, Carlsbad, Hobbs & Lovington.

Zone A - 0 - 12 miles
Zone B - 12 - 22 miles
Zone C - 22 to 40 miles
Zone D - 40 miles and beyond

COMMERCIAL LINE WORK CONTD:	Basic Hourly Rates	Fringe Benefits Payments			
		H & W	Pensions	Vacation	Education and/or Appr. Tr.
ZONE A					
Linemen - technician	$12.20	.60	3%		½%
Cable splicers	12.55	.60	3%		½%
Equipment Opr. (includes helicopter opr.)	11.59	.60	3%		½%
Equipment mechanic (includes helicopter mechanic)	10.74	.60	3%		½%
Powderman	10.74	.60	3%		½%
Groundman & Jackhammer Oprs	8.66	.60	3%		½%
ZONE B					
Linemen - technician	12.55	.60	3%		½%
Cable splicers	12.90	.60	3%		½%
Equipment opr. (includes helicopter opr)	11.94	.60	3%		½%
Equipment mechanic (includes helicopter mechanic)	11.09	.60	3%		½%
Powderman	11.09	.60	3%		½%
Groundman & Jackhammer Oprs.	9.01	.60	3%		½%
ZONE C					
Linemen - technician	12.70	.60	3%		½%
Cable splicers	13.05	.60	3%		½%
Equipment opr. (includes helicopter opr)	12.09	.60	3%		½%
Equipment mechanic (includes helicopter mechanic)	11.24	.60	3%		½%
Powderman	11.24	.60	3%		½%
Groundman & Jackhammer Oprs.	9.16	.60	3%		½%
ZONE D					
Linemen - technician	12.95	.60	3%		½%
Cable splicers	13.30	.60	3%		½%
Equipment opr. (includes helicopter opr)	12.34	.60	3%		½%
Equipment mechanic (includes helicopter mechanic)	11.49	.60	3%		½%
Powderman	11.49	.60	3%		½%
Groundman & Jackhammer Oprs.	9.41	.60	3%		½%

	Basic Hourly Rates	Fringe Benefits Payments			
		H & W	Pensions	Vacation	Education and/or Appr. Tr.
MARBLE, TILE & TERRAZZO WORKERS	$10.55	.77			
MARBLE, TILE & TERRAZZO FINISHERS	8.74	.77			
MILLWRIGHTS & PILEDRIVERMEN:					
Zone 1	12.80	1.10	1.35		.20
Zone 2	14.30	1.10	1.35		.20
Zone 3	15.05	1.10	1.35		.20

MILLWRIGHTS & PILEDRIVERMEN ZONE DEFINITIONS

BASING POINT - FROM ALBUQUERQUE CITY LIMITS

Zone 1 - 0 to 15 road miles from basing point

Zone 2 - 15 to 35 road miles from basing point

Zone 3 - Over 35 road miles from basing point

	Basic Hourly Rates	Fringe Benefits Payments			
		H & W	Pensions	Vacation	Education and/or Appr. Tr.
PAINTERS: ZONE I					
Class-A	$10.30	.70	.50		.05
Class-B	10.80	.70	.50		.05
Class-C	10.55	.70	.50		.05
Class-D	10.88	.70	.50		.05
Class-E	10.63	.70	.50		.05
PAINTERS: ZONE II					
Class-A	9.30	.70	.50		.05
Class-B	10.30	.70	.50		.05
Class-C	9.95	.70	.50		.05
Class-D	10.15	.70	.50		.05
Class-E	10.88	.70	.50		.05
Class-F	10.63	.70	.50		.05
PAINTERS: (ZONE III)					
Class-A	8.23	.68			.02
Class-B	8.65	.68			.02
Class-C	8.375	.68			.02
Class-D	9.08	.68			.02

	Basic Hourly Rates	Fringe Benefits Payments			
		H & W	Pensions	Vacation	Education and/or Appr. Tr.
PAINTERS (cont'd)					
PAINTERS (ZONE IV)					
Residential Construction in Santa Fe, Taos and Rio Arriba Counties:					
Brush & roller	$ 8.60	.70	.50		.05
Spray and sandblast	9.25	.70	.50		.05
Paperhangers	8.82	.70	.50		.05
Drywall Finisher	10.63	.70	.50		.05
Drywall Finisher Tool	10.88	.70	.50		.05

PAINTERS' ZONE AND CLASSIFICATION DEFINITIONS

ZONE I - San Juan, McKinley, Bernalillo, Torrance, Guadalupe, Quay, Catron, Socorro, Lincoln, DeBaca, Roosevelt, Chaves, Valencia, Sierra, Grant, Hidalgo, Curry, Lea, Eddy and Sandoval Counties, New Mexico.

Class A - Painters, roller and hand textures
Class B - Painters, spray, sandblasting, painter on steel bridges, tanks towers, pipe and structural
Class C - Paperhanger
Class D - Drywall finisher, ames tool operator
Class E - Hand finisher machine texture

ZONE II - Colfax, Hardin, Los Alamos, Mora, San Miguel Rio Arriba, Taos, Union and Santa Fe Counties

Class A - Painters and roller
Class B - Paperhangers
Class C - Spray, sandblast, steel, special coating applicator
Class D - Sing Painters
Class E - Drywall finisher tool and machine texture
Class F - Hand finisher

ZONE III - Luna, Otero, and Dona Ana Counties

Class A - Brush, paperhangers
Class B - Spray, sandblasting, swing stage, striping machine
Class C - Ames tool and steel brush after erection
Class D - Radio towers, water tanks smoke stake 70 - 100 ft.

	Basic Hourly Rates	Fringe Benefits Payments			
		H & W	Pensions	Vacation	Education and/or Appr. Tr.
PLASTERERS	$11.61	.77	.70		.10
PLUMBERS-PIPEFITTERS:					
Area I	13.75	.73	1.57		.19
Area II	14.25	.73	1.57		.19
Area III	15.50	.73	1.57		.19
Specific Area	14.38	.73	1.57		.19
Residential	8.05	.68	.25		.16

PLUMBERS - PIPEFITTERS' ZONES DEFINITIONS

BASING POINT CITIES OR TOWNS:
Albuquerque, Alamogordo, Anthony, Artesia, Belen, Carlsbad, Clovis, Deming, Espanola, Farmington, Gallup, Grants, Hobbs, Las Cruces, Las Vegas, Lordsburg, Lovington, Portales, Raton, Roswell, Ruidoso, Santa Fe, Silver City, Santa Rosa, Taos, Tucumcari, Truth of Consequence and Socorro, New Mexico

Area I - Shall include a distance of seven road miles inclusive beyond the city or town limits.
Area II - Shall extend a distance of four road miles inclusive beyond the outer perimeter of area I.
Area III - Shall apply to all areas not within areas 1 or 2, or not within the specific area.
Specific Area - Los Alamos, White Rock, South Mesa, McGregor Range, White Sands Missile Range and/or Proving Grounds, Atlas Missile Complex Sites in Chaves and Lincoln Counties, and the Oro Grande Range Camp and Dona Ana and Otero Counties.

POWER EQUIPMENT OPERATORS					
RESIDENTIAL & GENERAL BUILDING CONSTRUCTION					
Group 1	9.58	.70	.60		.15
Group 2	10.62	.70	.60		.15
Group 3	10.70	.70	.60		.15
Group 4	10.76	.70	.60		.15
Group 5	10.82	.70	.60		.15
Group 6	10.92	.70	.60		.15
Group 7	11.02	.70	.60		.15
Group 8	12.10	.70	.60		.15

HEAVY CONSTRUCTION (POWER EQUIPMENT OPERATORS AREA DEFINITIONS)

AREA I - Statewide, except San Juan County

AREA II - Farmington, San Juan County

Zone I - 0-15 miles from Farmington City Hall

Zone II - 15 to 35 miles from Farmington City Hall

Zone III - Over 35 miles from Farmington City Hall

	Basic Hourly Rates	Fringe Benefits Payments			
		H & W	Pensions	Vacation	Education and/or Appr. Tr.
HEAVY CONSTRUCTION (AREA I):					
POWER EQUIPMENT OPERATORS:					
Group I	$ 9.53	.75	.60		.15
Group II	10.57	.75	.60		.15
Group III	10.65	.75	.60		.15
Group IV	10.71	.75	.60		.15
Group V	10.77	.75	.60		.15
Group VI	10.87	.75	.60		.15
Group VII	10.97	.75	.60		.15
Group VIII	12.05	.75	.60		.15
HEAVY CONSTRUCTION (AREA II)					
POWER EQUIPMENT OPERATORS:					
GROUP I					
Zone 1	9.53	.75	.60		.15
Zone 2	11.03	.75	.60		.15
Zone 3	11.53	.75	.60		.15
GROUP II					
Zone 1	10.57	.75	.60		.15
Zone 2	12.07	.75	.60		.15
Zone 3	12.57	.75	.60		.15
GROUP III					
Zone 1	10.65	.75	.60		.15
Zone 2	12.15	.75	.60		.15
Zone 3	12.65	.75	.60		.15
GROUP IV					
Zone 1	10.71	.75	.60		.15
Zone 2	12.21	.75	.60		.15
Zone 3	12.71	.75	.60		.15
GROUP V					
Zone 1	10.77	.75	.60		.15
Zone 2	12.27	.75	.60		.15
Zone 3	12.77	.75	.60		.15
GROUP VI					
Zone 1	10.87	.75	.60		.15
Zone 2	12.37	.75	.60		.15
Zone 3	12.87	.75	.60		.15
GROUP VII					
Zone 1	10.97	.75	.60		.15
Zone 2	12.47	.75	.60		.15
Zone 3	12.97	.75	.60		.15
GROUP VIII					
Zone 1	12.05	.75	.60		.15
Zone 2	13.55	.75	.60		.15
Zone 3	14.05	.75	.60		.15

POWER EQUIPMENT OPERATORS AREA DEFINITIONS

AREA I - Farmington, San Juan County

Zone I - 0 - 15 miles from Farmington City Hall

Zone II - 15-35 miles from Farmington City Hall

Zone III - 35-50 miles from Farmington City Hall

AREA II - Statewide, except San Juan County

	Basic Hourly Rates	Fringe Benefits Payments			
		H & W	Pensions	Vacation	Education and/or Appr. Tr.
AREA I (SITE PREPARATION & DIRT WORK)					
ZONE I					
Group 1	8.88	.75	.60		.15
Group 2	9.92	.75	.60		.15
Group 3	10.00	.75	.60		.15
Group 4	10.06	.75	.60		.15
Group 5	10.12	.75	.60		.15
Group 6	10.22	.75	.60		.15
Group 7	10.32	.75	.60		.15
Group 8	11.40	.75	.60		.15
ZONE II					
Group 1	$10.63	.75	.60		.15
Group 2	11.67	.75	.60		.15
Group 3	11.75	.75	.60		.15
Group 4	11.81	.75	.60		.15
Group 5	11.87	.75	.60		.15
Group 6	11.97	.75	.60		.15
Group 7	12.07	.75	.60		.15
Group 8	13.15	.75	.60		.15
ZONE III					
Group 1	11.13	.75	.60		.15
Group 2	12.17	.75	.60		.15
Group 3	12.25	.75	.60		.15
Group 4	12.31	.75	.60		.15
Group 5	12.37	.75	.60		.15
Group 6	12.47	.75	.60		.15
Group 7	12.57	.75	.60		.15
Group 8	13.65	.75	.60		.15
AREA II (SITE PREPARATION & DIRT WORK)					
Group 1	8.88	.75	.60		.15
Group 2	9.92	.75	.60		.15
Group 3	10.00	.75	.60		.15
Group 4	10.06	.75	.60		.15
Group 5	10.12	.75	.60		.15
Group 6	10.22	.75	.60		.15
Group 7	10.32	.75	.60		.15
Group 8	11.40	.75	.60		.15

POWER EQUIPMENT OPERATORS CLASSIFICATION DEFINITIONS
BUILDING, RESIDENTIAL, HEAVY CONSTRUCTION & SITE PREPARATION & DIRT WORK

GROUP I - Fireman, oiler, screedman, scale operator such as bin-a batch, rubber tired farm type tractor, tractors under 50 HP without attachments, breakman, concrete paving curing machine (bridge-type), helper; (mechanic, welder, grease truck)

GROUP II - Rollers, sheepsfoot or pneumatic self propelled w/o dozer, concrete conveyor, service truck operator (head oiler), air compressor (300 CFM & over), pumps (6" and over), screening plants, concrete mixers (under 1 CY), concrete saw or grinder-span type, 1 drum hoist, air tugger, elevating belt type loaders, forklift, lumber stacker, tractor farm type (under 50 HP with attachments) motorman and industrial locomotive operator, winch truck, front end loaders, (under 2 CY), power plants which generate over 15 KW, welding machines

GROUP III - Bituminous distributors, boilers, retort and hot oil heaters, concrete mixers (1 CY and over), concrete paver-single drum, drilling equipment, motor grades (rough), shaft and tunnel equipment; (refrigeration, slusher, jumbo forms), trenching machines (all types), pump crete and gunite machines, slipform paver, mechanical bullfloats, concrete slab spreading machine, concrete slab finishing machine, asphalt plants, bituminous finishing machines, crushing plants

GROUP IV - Front end loaders (2 thru 10 CY), rollers steel wheeled-all types, bulldozers, scrapers (motor or towed), elevating graders, concrete batching plants, self-propelled rollers -- equipped with dozer, twin-bowl scrapers and quad 8 or 9 pushers (35¢ over basic rate, three bowl scraper (60¢ over basic rate)

GROUP V - Hydraulic cranes-with less than 50 feet of boom (20 tons and under), concrete paver-double drum, cat cranes, hysters, side and swingboom cats, 2 drum hoists, auto fine grader

GROUP VI - Mucking machines - all types, motor grader (finish) mechanic - welder

GROUP VII - Steam engineers, loader (front end over 10 CY), concrete pump (snorkel type)

GROUP VIII - All shovel type equipment: cranes, draglines, backhoes, derricks, guy & stiff leg, pipemobile (No. 2 operator), piledriver, hydraulic cranes (20 tons & over), mine hoist, belt loader ("C.M.I." Type), booms & jibs 150 ft. through 199 ft. - 25¢ per hour above base pay. 200 ft. and over - 50¢ per hour above base pay. Shovel (wheel type), boring machine (tunnel or shaft mole), pipe mobile

	Basic Hourly Rates	Fringe Benefits Payments			
		H.& W	Pensions	Vacation	Education and/or Appr. Tr.
ROOFERS (Building Const.)	$9.50	.50			
ROOFERS (RESIDENTIAL CONST.)	8.30	.50			
SHEET METAL WORKERS:					
Zone 1	12.77	.53	1.31		.19
Zone 2	15.02	.53	1.31		.19
Zone 3	13.77	.53	1.31		.19
Zone 4	15.62	.53	1.31		.19
Zone 5	10.72	3%+.51	.485		.06

SHEET METAL WORKERS ZONE DEFINITIONS

ZONE I
Bernalillo, Catron, Chaves, Colfax, Curry, DeBaca, Guadalupe, Harding Lincoln, McKinley, Mora, Quay, Rio Arriba, Roosevelt, Sandoval, San Miguel, Santa Fe, Socorro, Taos, Torrance, Union and Valencia Counties, New Mexico

ZONE II
Any area except that described as zone I: Kirtland Air Force Base, East and West; Rio Rancho; Paradise Hills; and area including 10 miles each direction east and west of Interstate Highway 25 and extending north and south, terminating with but including Bernalillo and Belen; all area identified by corner reference points beginning at and including Pojoaque, to Chimayo, to Velarde to Abiquiu and back to Pojoaque

ZONE III
Los Alamos County

ZONE IV
San Juan County

ZONE V
Dona Ana, Eddy Grant, Hidalgo, Lea, Luna, Sierra and Otera Counties, including Holloman Air Force Base, White Sands and McGregor Ranges.

	Basic Hourly Rates	Fringe Benefits Payments			
		H & W	Pensions	Vacation	Education and/or Appr. Tr.
SPRINKLER FITTERS	$13.84	.85	1.20		.08
SOFT FLOOR LAYERS:					
Zone 1	8.50	.38	.10		.02
Zone 2	10.00	.70	.50		.04

SOFT FLOOR LAYERS' ZONE DEFINITIONS

ZONE 1 - Dona Ana, Luna and Otero Counties, New Mexico
ZONE 2 - Statewide (excluding Dona Ana, Luna and Otero Counties

SOUND INSTALLERS:					
SUPERVISOR					
Zone 1	$10.45	.60	38		[illegible]
Zone 2	11.64	.60	38		[illegible]
Zone 3	14.23	.60	38		[illegible]
Zone 4	12.95	.60	.30		.01
TECHNICIANS					
Zone 1	8.28	.60	38		[illegible]
Zone 2	9.57	.60	38		[illegible]
Zone 3	12.16	.60	38		[illegible]
Zone 4	10.26	.60	.31		.01
SOUND INSTALLERS					
Zone 1	6.73	.60	38		[illegible]
Zone 2	8.02	.60	38		[illegible]
Zone 3	10.61	.60	38		[illegible]
Zone 4	8.42	.60	.30		.01

SOUND INSTALLERS' ZONE DEFINITIONS

ZONE I - Thirty mile radius of main post office in Albuquerque
ZONE II - Remainder of Valencia, Sandoval, Santa Fe, Torrance, and Bernalillo Counties, the hourly rates of pay shall be increased to twelve and one-half (12½) percent of journeyman rate of pay for Zone I.
ZONE III - Chaves, Curry, Roosevelt, Lincoln, Guadalupe, DeBaca, Quay, San Miguel, Mora, Harding, Union, Colfax, Taos, Rio Arriba, Catron, Sierra, Grant, Los Alamos, San Juan, McKinley Counties, the hourly rates of pay shall be increased by thirty-seven and one-half (37.5) percent of the journeyman rate of pay for Zone I.
ZONE IV - Lea and Eddy

TRUCK DRIVERS' ZONE PAY BASING POINTS AND DEFINITIONS LISTED BELOW FOR BUILDING AND HEAVY CONSTRUCTION

BASING POINTS ARE AS FOLLOWS:
Alamogordo, Albuquerque, Artesia, Bayard, Belen, Carlsbad, Clovis, Deming, Espanola, Eunice, Farmington, Gallup, Grants, Hobbs, La Cruces, Las Vegas, Lordsburg, Lovington, Portales, Raton, Roswell, Ruidoso, Santa Fe, Santa Rosa, Silver City, Socorro, Taos, Tucumcari

ZONE I - Shall be jobs or projects within 15 road miles from the starting points listed above.
ZONE II - Shall be jobs or projects which are more than fifteen road miles, but less than thirty-five road miles from base points, also, includes all of Los Alamos County.
ZONE III - Shall be those jobs or projects which are thirty-five road miles or more from the base points.

	Basic Hourly Rates	Fringe Benefits Payments			
		H & W	Pensions	Vacation	Education and/or Appr. Tr.
BUILDING CONSTRUCTION:					
TRUCK DRIVERS (ZONE I)					
Group 1	$ 8.46	.77	.77		
Group 2	8.58	.77	.77		
Group 3	8.66	.77	.77		
Group 4	8.78	.77	.77		
Group 5	8.82	.77	.77		
Group 6	8.93	.77	.77		
Group 7	9.02	.77	.77		
Group 8	9.12	.77	.77		
Group 9	9.22	.77	.77		
TRUCK DRIVERS (ZONE II)					
Group 1	10.06	.77	.77		
Group 2	10.18	.77	.77		
Group 3	10.26	.77	.77		
Group 4	10.38	.77	.77		
Group 5	10.43	.77	.77		
Group 6	10.53	.77	.77		
Group 7	10.63	.77	.77		
Group 8	10.73	.77	.77		
Group 9	10.82	.77	.77		
TRUCK DRIVERS (ZONE III)					
Group 1	10.56	.77	.77		
Group 2	10.68	.77	.77		
Group 3	10.76	.77	.77		
Group 4	10.88	.77	.77		
Group 5	10.93	.77	.77		
Group 6	11.03	.77	.77		
Group 7	11.13	.77	.77		
Group 8	11.22	.77	.77		
Group 9	11.42	.77	.77		

	Basic Hourly Rates	Fringe Benefits Payments			
		H & W	Pensions	Vacation	Education and/or Appr. Tr.
RESIDENTIAL CONSTRUCTION:					
TRUCK DRIVERS					
Group 1	$ 8.16	.77	.77		
Group 2	8.28	.77	.77		
Group 3	8.36	.77	.77		
Group 4	8.48	.77	.77		
Group 5	8.53	.77	.77		
Group 6	8.63	.77	.77		
Group 7	8.73	.77	.77		
Group 8	8.87	.77	.77		
Group 9	9.02	.77	.77		
HEAVY CONSTRUCTION:					
TRUCK DRIVERS (ZONE I)					
Group 1	8.61	.77	.77		
Group 2	8.73	.77	.77		
Group 3	8.81	.77	.77		
Group 4	8.93	.77	.77		
Group 5	8.98	.77	.77		
Group 6	9.08	.77	.77		
Group 7	9.18	.77	.77		
Group 8	9.32	.77	.77		
Group 9	9.47	.77	.77		
TRUCK DRIVERS (ZONE II)					
Group 1	10.11	.77	.77		
Group 2	10.23	.77	.77		
Group 3	10.31	.77	.77		
Group 4	10.43	.77	.77		
Group 5	10.48	.77	.77		
Group 6	10.58	.77	.77		
Group 7	10.68	.77	.77		
Group 8	10.82	.77	.77		
Group 9	10.97	.77	.77		
TRUCK DRIVERS (ZONE III)					
Group 1	10.36	.77	.77		
Group 2	10.48	.77	.77		
Group 3	10.56	.77	.77		
Group 4	10.68	.77	.77		
Group 5	10.73	.77	.77		
Group 6	10.83	.77	.77		
Group 7	10.93	.77	.77		
Group 8	11.07	.77	.77		
Group 9	11.22	.77	.77		

TRUCK DRIVERS CLASSIFICATION DEFINITIONS (BUILDING, RESIDENTIAL CONSTRUCTION)

GROUP I - Pickup 3/4 ton and under, lubrication, light tire repair and washer, swamper, 2 or 4 and up.

GROUP II - Dump or batch truck under 8 C.Y.W.L.C.: flat bed (bobtail) 2 ton and under; warehouseman including material checker, fork lift under 5 tons MRC.

GROUP III - Dump trucks (including all highway and off highway) 8 up to 16 C.Y.W.L.C.; water, fuel or oil trucks less than 3,000 gal., flat bed (bobtail) over 2 tons

GROUP IV - Distributor driver; heavy tire repairman; lumber carrier driver; young buggy or similar equipment, transit mix or agitator 2 or 3 axle bobtail driver (flat-bed or van single axle); forklifts 5 ton and over MRC:

GROUP V - Dumpsters and dumpcrete driver; water, fuel or oil truck 3,000 to 6,000 gal; lowboys and light equipment driver; euclid type tank wagon under 6,000 gal.

GROUP VI - Vacuum truck; dump trucks (including all highway and off-highway 16 up to 22 C.Y.W.L.C.

GROUP VII - Transit mix or agitator semi or 4 axle equipment driver; flaherty truck type spreader box driver; slurry truck driver; bulk cement driver; semi-doubles; 4 axle bobtail; winch truck and "A" frame; dump truck (including all highway and off-highway) 22 CY up to 35 C.Y.W.L.C..

GROUP VIII - Euclid diesel power turnarocker; terra coba-DW20-LeTourneau Pulls and similar diesel powered equipment when used to haul materials and assigned to a teamster-lowboy heavy equipment driver; water, fuel or oil trucks 6,000 gal. and over including tank wagon drivers, semi-trailer driver (flat-bed or van tandems); light equipment mechanic; dump trucks (including all highway and off-highway) 35 C.Y.W.L.C. and over; truck and trailer or semi-trailer (flatbed); eject all

GROUP IX - Lowboy (heavy equipment double gooseneck); heavy equipment mechanic; welder (body and fender men)

TRUCK DRIVERS CLASSIFICATION DEFINITIONS (HEAVY CONSTRUCTION)

GROUP I - Pickup 3/4 ton and under, lubrication, light tire repair and washer, swamper, teamster 2 or 4 and up

GROUP II - Dump or batch truck, under 8 C.Y.W.L.C. flat bed (bobtail) 2 ton and under, warehouseman including material checker, cardex man, expeditor, forklift under 5 ton M.R.C.

GROUP III - Dump trucks (including all highway & off-highway) 8 up to 16 C.Y.W.L.C., water,fuel or oil trucks less than 3,000 gals., flatbed (bobtail) over 2 tons

GROUP IV - Distributor driver, heavy tire repair, lumber carrier driver, yound buggy or similar equipment, transit mix or agitator 2 or 3 axle bobtail equipment, scissor truck, bulk cement bobtail 2 or 3 axles, semi-trailer flatbed or van single axle, forklift 5 ton and over M.R.C.

GROUP V - Dumpster and dumpcrete driver, water, fuel or oil truck, 3,000 to 6,000 gals., capacity, lowboy, light equipment driver, euclid type tank wagon under 6,000 gallons

GROUP VI - Vacuum truck, dump trucks (including all highway & off-highway) 16 up to 22 C.Y.W.L.C.

GROUP VII - Transit mix or agitator semi or 4 axle equipment driver, flaherty truck type spreader box driver, slurry truck driver, bulk cement driver, semi-doubles, 4 axle bobtail, winch truck & "A" frame, dump trucks (including all highway and off-highway) 22 C.Y. up to 35 C.Y.W.L.C.

GROUP VIII - Euclid diesel powered turnarocker, terra cobra, DW 10, DW 20, LeTourneau pulls and similar diesel powered equipment when used to haul materials and assigned to a teamster, lowboy heavy equipment driver, water, fuel or oil truck 6,000 gallons and over (including tank wagon drivers), semi-trailer driver (flatbed or van tandems) light equipment mechanic, dump trucks (including all highway and off-highway) 35 C.Y.W.L.C. and over, truck and trailer or semi-trailer (flatbed), ejectall

GROUP IX - Lowboy (heavy equipment, double gooseneck), heavy equipment mechanic, welder (body and fender man)

[FR Doc. 80-30009 Filed 11-26-80; 8:45 am]
BILLING CODE 4510-27-C

PAID HOLIDAYS:
A-New Year's Day; B-Memorial Day; C-Independence Day; D-Labor Day; E-Thanksgiving Day; F-Christmas Day; G-Friday after Thanksgiving

FOOTNOTES:
a - Includes $.07 contribution to the Occupational Health Fund
b - 1st 6 months - none; 6 months to 5 years, 6%; over 5 years, 8% of basic hourly rate.
c - Holidays A through G

WELDERS - receive rate prescribed for craft performing operation to which welding is incidental.

Unlisted classifications needed for work not included within the scope of the classifications listed may be added after award only as provided in the labor standards contract clauses (29 CFR, 5.5 (a)(ii).

federal register

Friday
November 28, 1980

Part IV

Department of Transportation

Federal Aviation Administration

Operating Noise Limits for Certain Airplanes Engaged in United States Domestic or Foreign Air Commerce and for Certain Airplanes Operating Under Part 125; Final Rules

DEPARTMENT OF TRANSPORTATION

Federal Aviation Administration

14 CFR Part 91

[Docket No. 20813, Amdt. No. 91-170A]

Aircraft Operating Noise Limits for Airplanes Operating Under New Part 125; Amended Date of Designation of Applicable Rules

AGENCY: Federal Aviation Administration (FAA), DOT.

ACTION: Final rule: Request for comments.

SUMMARY: On October 9, 1980, the FAA published its final rule (Amendment No. 91-170) concerning the operating noise limits rule for certain aircraft operated under new Part 125, which becomes effective February 1, 1981 (45 FR 67258). That rule designates the provisions of the noise rule that apply to particular airplanes on a specified date before Part 125 becomes effective. The date of November 1, 1980, was used because the proposed amendments to the aircraft operator noise rule that are required to implement Title III of the Aviation Safety and Noise Abatement of 1979 (Notice No. 80-7) were scheduled to be effective before that date and must be reflected in the noise requirements for those affected airplanes operated under Part 125. However, issuance of those amendments has been delayed and, the date of November 1, 1980, is no longer viable to achieve the intended result. This action amends the date of designation of applicable rules in new § 91.302, adopted in Amendment No. 91-170 to read "Nov. 29, 1980," the day after the amendments to Subpart E of Part 91 implementing Title III of the Aviation Safety and Noise Abatement Act of 1979 became effective.

DATES: Effective date—February 1, 1981. Comments must be received on or before March 1, 1981.

ADDRESSES: Send comments on the rule in duplicate to: Federal Aviation Administration, Office of the Chief Counsel, Attn: Rules Docket (AGC-204), Docket No. 20813, 800 Independence Avenue, SW., Washington, DC 20591;

Or deliver comments in duplicate to: FAA Rules Docket, Room 916, 800 Independence Avenue, SW., Washington, DC.

Comments may be examined in the Rules Docket, weekdays except Federal Holidays, between 8:30 a.m. and 5:00 p.m.

FOR FURTHER INFORMATION CONTACT: Mr. Richard N. Tedrick, Noise Policy and Regulatory Branch (AEE-110), Noise Abatement Division, Office of Environment and Energy, Federal Aviation Administration, 800 Independence Ave., SW., Washington, DC 20591; telephone (202) 755-9027.

SUPPLEMENTARY INFORMATION:

Request for Comments on the Rule

Although this action is in the form of a final rule, comments are invited on the rule. It involves amendments to the provisions that designate applicable rules under § 91.302 to achieve the intended effect discussed in the preamble to Amendment No. 91-170; thus, it was not preceded by further notice and public procedure. When the comment period ends, the FAA will use any comments received, together with other available information, to review the regulation. After the review, if the FAA finds that changes are appropriate, it will initiate rulemaking proceedings to amend the regulation. Comments that provide the factual basis supporting the views and suggestions presented are particularly helpful in evaluating the effects of the rule and determining whether additional rulemaking is needed. Comments are specifically invited on the overall regulatory, economic, environmental, and energy aspects of the rule that might suggest a need to modify the rule.

Since the subjects and issues involved in this amendment, were already subject to notice and public procedure on the proposed rule, and this amendment is necessary to achieve the regulatory effects contemplated at the time of issuance of the final rule, I find that further notice and public procedure before issuing this amendment is not necessary.

Adoption of the Amendment

Accordingly, § 91.302 of Part 91 of the Federal Aviation Regulations (14 CFR Part 91) as adopted in Amendment 91-170 (45 FR 67259; October 2, 1960), is amended, effective February 1, 1981, by deleting the words "November 1, 1980," in each place they appear and by substituting for them the words "November 29, 1980,".

(Secs. 307, 313(a), 601, 603, 604, and 611, Federal Aviation Act of 1958, as amended (49 U.S.C. 1348, 1354(a), 1421, 1423, 1424, and 1431); sec. 6(c), Department of Transportation Act (49 U.S.C. 1655(c)); Title III, Aviation Safety and Noise Abatement Act of 1979 (94 Stat. 50)

Note.—The FAA has determined that this document involves a regulation which is not significant under Executive Order 12044, as implemented by DOT Regulatory Policies and Procedures (44 FR 11034; February 26, 1979). Since this regulatory action involves amendments that are corrective and editorial in nature and are needed to achieve the substance of the regulation contemplated under the final rule, the anticipated impact is so minimal that it does not warrant preparation of a separate regulatory evaluation.

Issued in Washington, DC, on November 17, 1980.

Langhorne Bond,

Administrator.

[FR Doc. 80-36522 Filed 11-20-80; 8:45 am]

BILLING CODE 4910-13-M

14 CFR Part 91

[Docket No. 20251; Amdt. No. 91-171]

Operating Noise Limits for Certain Turbojet Airplanes Engaged in Domestic or Foreign Air Commerce in the United States

AGENCY: Federal Aviation Administration (FAA), DOT.

ACTION: Final rule.

SUMMARY: This action amends the operating noise limits rule for airplanes engaged in United States domestic or foreign air commerce. That rule applies to operators of civil subsonic turbojet powered airplanes having maximum weights of more than 75,000 pounds and standard airworthiness certificates or their equivalents. Those aircraft, whether of U.S. or foreign registry, are required to comply with at least "Stage 2 noise levels" under Part 36 of the Federal Aviation Regulations in order to be operated to or from airports in the United States after specified dates. The Administrator intends to accept certain demonstrations of noise level compliance under portions of ICAO Annex 16 noise standards that are found to be substantially compatible with, and achieve results equivalent to those achievable under, Part 36 noise requirements. These amendments are adopted under § 611 of the Federal Aviation Act of 1958, as amended, to reflect Title III of the recently enacted Aviation Safety and Noise Abatement Act of 1979 (Pub. L. 96-193; 94 Stat. 50).

These amendments apply to foreign operators the same noise level requirements applied to U.S. operators and generally require final compliance by 1985. Statutory extensions of the compliance dates under specified terms and conditions are also implemented for both U.S. and foreign operators. Those statutory provisions provide an additional incentive to replace noncomplying two-engine and three-engine airplanes with the quieter "Stage 3 airplanes" and limited exemptions for two-engine airplanes to protect air

transportation services to small communities in the United States.

In the preamble to the operating noise limits rule adopted in 1976, the FAA announced its intention to take additional regulatory action, if an international agreement were not reached before 1980 on international operating noise requirements and a compliance schedule for achieving either the U.S. noise levels (FAR Part 36) or the international noise levels (ICAO Annex 16). The recently enacted Aviation Safety and Noise Abatement Act of 1979 reflects that policy statement and requires completion of portions of this regulatory action, in accordance with the Act.

DATES: Effective Date—November 28, 1980.

Compliance dates are summarized under the caption "II SYNOPSIS OF THE AMENDMENTS" and are detailed in the respective discussions of the rule.

FOR FURTHER INFORMATION CONTACT: Mr. Richard N. Tedrick, Noise Policy and Regulatory Branch (AEE-110), Noise Abatement Division, Office of Environment and Energy, Federal Aviation Administration, 800 Independence Avenue, SW., Washington, DC 20591; telephone: (202) 755-9027.

SUPPLEMENTARY INFORMATION:

I. Regulatory History

On April 14, 1980, the Federal Aviation Administration (FAA) published Notice No. 80-7 (45 FR 25355) proposing to amend Part 91 Subpart E, "Operating Noise Limits". That notice proposed the amendments described and discussed below to implement the provisions of Title III of the recently enacted Aviation Safety and Noise Abatement Act of 1979. Interested persons were invited to participate in this rulemaking by submitting written comments to the Rules Docket on the proposals contained in that notice. All comments received have been given full consideration in the promulgation of this amendment. Except as discussed below, this amendment adopts the proposals in Notice No. 80-7 without substantive change.

Pursuant to § 611(b)(1) of the Federal Aviation Act of 1958, as amended, the FAA has consulted with the Secretary of Transportation and the U.S. Environmental Protection Agency (EPA) prior to the adoption of this amendment. An environmental assessment regarding this amendment has been prepared in accordance with the National Environmental Policy Act of 1969, and implementing regulations and directives. Also, submission of this amendment to the EPA is in accordance with § 309 of the Clean Air Act, as amended (42 U.S.C. 1857h-7), and the regulations of the Council on Environmental Quality (40 CFR Part 1500).

Part 36 of the Federal Aviation Regulations "Noise Standards: Aircraft Type Certification" (34 FR 18355; November 18, 1969), which became effective December 1, 1969, originally prescribed noise measurement, evaluation, and level requirements for the issuance of type certificates, and changes to those certificates, for subsonic transport category large airplanes and for subsonic turbojet engine powered airplanes regardless of category and weight. That regulation initiated the regulatory, noise abatement program of the FAA under the statutory authority of Pub. L. 90-411 (July 21, 1968), which added § 611 to the Federal Aviation Act of 1958 (the "FA Act").

On December 17, 1976, after consultations with the Secretary of Transportation and the Administrator of the EPA, the FAA adopted Amendment 91-136 which added Subpart E to Part 91 (41 FR 56046; December 23, 1976). Prior to this amendment, Subpart E applied to U.S. registered civil subsonic airplanes with maximum weights of more than 75,000 pounds and having standard airworthiness certificates. It requires, as a condition to continuing operation after certain dates, that airplanes be shown to comply with the noise levels of Part 36. A phased compliance schedule applies to airplanes engaged in commercial and air carrier operations. Interim compliance dates of January 1, 1981, and January 1, 1983, apply to specified portions of those operators' fleets. Final compliance for all airplanes is required before January 1, 1985. Special provisions govern replacement of existing airplanes, apportionment of an operator's fleet between domestic and foreign commerce, and the limitation on the permissible use of the tradeoff provisions in Part 36 (§ C36.5(b)).

On December 13, 1979, after consultations with the Secretary and the EPA, the FAA adopted Amendment 91-161, entitled "Aircraft Operating Noise Limits: Compliance Plans and Expanded Definition of 'Replacement Airplanes'" (44 FR 75558; December 20, 1979; and 45 FR 6924; January 31, 1980). That amendment (1) redefines "replacement airplanes" to allow credit under the rule for certain reengined airplanes, and (2) requires periodic submission to the FAA of fleet operator compliance plans and status reports for achieving and maintaining compliance under the rule.

II. Synopsis of the Amendments

A. General Compliance Requirements

The purpose of these amendments is to bring Subpart E of Part 91 of the Federal Aviation Regulations (14 CFR Part 91) into conformance with Title III of the Aviation Safety and Noise Abatement Act of 1979 (Pub. L. 96-193; 94 Stat. 50; hereafter referred to as the "ASNA Act"). These amendments apply to airplane operators engaged in domestic or foreign air commerce in the United States. They cover civil subsonic turbojet engine powered airplanes with maximum weights of more than 75,000 pounds, regardless of the State of registry. They require compliance with specified noise levels under Part 36 (including the permissible use of tradeoff provisions) as a condition of operating to or from airports in the United States after specified dates. For subsonic airplanes engaged in foreign commerce, the Administrator may accept as complying noise levels under the rule the noise requirements applied to the airplane under the International Civil Aviation Organization (ICAO) Annex 16 when those requirements are shown to be substantially compatible with, and achieve noise levels equivalent to those achievable under, Part 36. Chapter 3 of ICAO Annex 16 is, for example, the practical equivalent of current Part 36 Stage 3 noise requirements. Also, ICAO Annex 16, Chapter 2, for four-engine airplanes is a practical equivalent of the Stage 2 noise requirements for those airplanes with engines that do not have a high bypass ratio; it does not generally achieve results equivalent to current Part 36 Stage 2 noise requirement for other airplanes. However, as applied to specific airplanes, that equivalency might be established.

Unless scheduled for replacement under a FAA approved plan or covered by a "service to small communities" or other exemption, each affected airplane must be shown to comply with the applicable Stage 2 or Stage 3 noise levels under Part 36 or it may not be operated in the United States on and after the following dates:

January 1, 1981—

a. At least one quarter of the airplanes operated by each operator in domestic air commerce that have four engines with no by-pass ratio or a by-pass ratio less than two; and

b. At least half of the airplanes powered by engines with any other bypass ratio or by another number of engines and engaged in domestic air commerce.

January 1, 1983—

a. At least one half of the airplanes operated by each operator in domestic air commerce that have four engines with no by-pass ratio or a by-pass ratio less than two; and

b. All the airplanes powered by engines with any other bypass ratio or by another number of engines and engaged in domestic air commerce.

January 1, 1985—

All airplanes engaged in domestic or foreign commerce in the United States, regardless of the State of registry.

U.S. operators of affected airplanes engaged in both domestic and foreign air commerce may elect to apportion those airplanes between the two types of operations in accordance with a FAA approved method of apportionment. (No need to apportion exists for foreign operators.)

Foreign operators of airplanes covered by the rule must achieve full compliance by January 1, 1985, for those airplanes operated to or from airports in the United States. However, those operators are eligible for the same extensions of compliance dates that are available to U.S. operators. Those provisions of the rule are summarized in the following discussion.

B. Extensions of Compliance Dates

The compliance date for a particular airplane may be extended under an approved replacement plan or a "service to small communities exemption," subject to a number of eligibility and termination requirements specified in the ASNA Act. Those dates specified are as follows:

After January 1, 1983—

A service to small communities exemption covering a two-engine airplane expires on the date of delivery to another person of an exempted two-engine airplane that is sold, or otherwise disposed of, to that other person.

On or Before January 1, 1985—

a. The authority to continue operations under an approved replacement plan, for the replacement of a three-engine or four-engine airplane expires on January 1, 1985, or on an earlier date specified in the plan; and

b. A service to small communities exemption covering a two-engine airplane with more than 100 passenger seats expires on January 1, 1985, unless the airplane is earlier sold, or otherwise disposed of, to another person.

On or Before January 1, 1986—

The authority to continue operations under an approved replacement plan for the replacement of a two-engine airplane expires on January 1, 1986, or on an earlier date specified in the plan.

On or Before January 1, 1988—

A service to small communities exemption covering a two-engine airplane with 100 passenger seats or less expires on January 1, 1988, unless the airplane is earlier sold, or otherwise disposed of, to another person.

To be eligible for approval of a plan for the replacement of two-engine and three-engine airplanes that would allow operations until the dates discussed above, an operator must enter into a binding contract before January 1, 1983, that specifies delivery of a "Stage 3 airplane" before the applicable compliance date. Approval of a plan will be considered if the replacement airplane achieves noise levels equivalent to a "Stage 3 airplane" because it has been certificated under ICAO Annex 16, Chapter 3. Approval of a replacement plan for any other airplane continues to be governed by the rule in effect before this amendment which allows operations until a date before January 1, 1985, when a plan (approved before the applicable phased compliance date) provides for a replacement airplane that either (1) has been shown to be a Stage 2 airplane before issuance of its original standard airworthiness certificate; or (2) has been reengined, or otherwise modified, and shown to be a Stage 3 airplane under Part 36. After the expiration of an exemption or the authority to continue operations under an approved replacement plan, compliance with Part 36 noise levels must be shown and maintained in order to operate that airplane in the United States.

For purposes of the service to small communities exemption for two-engine airplanes, the seat configuration of the airplane is governed by that seating capacity shown to exist on December 1, 1979, or an earlier date established for that airplane by the Administrator.

In bringing those affected operators engaged in foreign air commerce in the United States under Subpart E of Part 91, this amendment applies the same Part 36 noise limits and other requirements currently applicable under Subpart E. It also applies to all operators the provisions governing the service to small communities exemption and the authority to continue to operate a "Stage 1 airplane" under an approved replacement plan. For the reasons discussed later, as a potentially acceptable alternative, it allows operators of certain subsonic airplanes engaged in foreign air commerce to demonstrate that their airplanes comply with international noise standards (such as ICAO Annex 16, Chapter 3) if those standards are substantially compatible with, and achieve noise levels equivalent to those achievable under, Part 36.

Operators of aircraft in foreign air commerce are also reminded that in accordance with FAR Part 11 and § 611 of the FA Act, the Administrator may grant exemptions in the public interest from the FAA's nose control and abatement regulations. In considering the public interest, the Administrator reviews the need to provide air transportation services to those airports that would be affected. The Administrator also considers the factors contributing to a fair and reasonable access to U.S. airports by both domestic and foreign operators under substantially compatible requirements to achieve the requisite equivalent noise level reductions at those airports. Exercise of that discretionary authority, pursuant to § 611, ensures full consideration of the particular matters presented by a petitioner for relief from specific provisions of the regulation. The Administrator considers, among other things, whether the regulation, as applied to the petitioner, is economically reasonable, technologically practicable, and appropriate to the particular type of aircraft affected under the circumstances presented. It should be noted that under § 611, the FAA is required to consult with the Environmental Protection Agency and the Secretary of Transportation before granting an exemption from the rules. To ensure an adequate opportunity for review of any requests for exemption from operators engaged in foreign air commerce, and for operators to achieve compliance when any petition is denied, requests should be filed as early as practicable but no later than April 1, 1984. In reviewing requests for exemption applicable to an operator's service to the United States pursuant to a bilateral agreement, the FAA will consider whether there has been a demonstration that the service would be jeopardized without relief from the regulation. The Administrator will also consider the extent to which the applicant's compliance with ICAO Annex 16 noise requirements achieves results equivalent to those achievable under current Part 36 noise requirements.

This amendment revokes the current provision in Subpart E that limits use of Part 36 tradeoff provisions in demonstrating compliance with required Part 36 noise levels.

III. Aircraft Noise Rules

Pub. L. 90–411, 92–574, 95–609, and 96–193 were enacted to provide the statutory basis for promulgating regulations providing present and future relief and protection to the public health and welfare from noise and sonic boom from civil aircraft. Under § 611 of the FA Act, the FAA, after consultation with the Secretary of Transportation and the Administrator of the Environmental Protection Agency, is responsible for the adoption and amendment of rules which prescribe the necessary standards and regulations.

Since the adoption of Part 36 in 1969, the FAA has issued a number of other notices proposing amendments to its provisions and, subsequent to notice and public procedure, has adopted those amendments which have been found to be consistent with the provisions of § 611 of the FA Act. Those amendments have increased the protection of the public health and welfare by providing the necessary control and abatement of aircraft noise and sonic boom. In addition to the FAR Part 36 airplane noise certification rules, the FAA has adopted rules governing how airplanes should be operated for noise control purposes. On March 28, 1973, the FAA published an amendment to Part 91 (Amendment 91–112; 38 FR 8051) to prohibit unauthorized operation of civil aircraft at supersonic speeds over the United States. Amendment 91–134 (41 FR 52388; November 29, 1976), amended Part 91 for noise abatement purposes to require that a pilot in command of a civil turbojet-powered airplane use the lowest authorized flap setting consistent with safety. Amendment 91–136 (41 FR 56046; December 23, 1976) as previously discussed, added Subpart E to Part 91 to require phased compliance with the Part 36 noise limits by U.S. registered, civil subsonic turbojet engine powered airplanes with maximum weights of more than 75,000 pounds having standard airworthiness certificates and engaged in air commerce in the United States. Amendment 91–153 (43 FR 28406; June 29, 1978) strengthened the prohibition on sonic booms under § 91.55 and amended Subpart E to prohibit the operation to and from U.S. airports of all civil supersonic aircraft, except a limited number of Concorde SSTs, that do not meet FAR Part 36 noise standards. Amendment 91–161, as previously discussed, amended Subpart E to allow replacement credit during the phased compliance period for certain re-engined airplanes shown to comply with Stage 3 noise levels and to require U.S. operators to submit compliance plans and status reports under the rule.

IV. Need for Regulation

As discussed in Notice No. 80–7, operations by U.S. and foreign operators engaged in foreign air commerce create a significant noise impact at the international airports. Because of their longer flight distances, which require more fuel, international flights normally operate at higher gross weights and create higher noise levels during takeoff. The noise impact increases as operations increase and will become more significant by 1985 when, under existing rules, most U.S. airplanes used in domestic service must meet at least the Stage 2 noise levels of Part 36. Also, additional "gateway" cities are receiving international operations as more international routes are awarded.

In the Aviation Noise Abatement Policy issued by DOT/FAA on November 18, 1976, and again in the preamble to Subpart E, the FAA stated that U.S. regulatory action would be taken in the event an agreement for compliance was not reached in the ICAO by 1980. Such an agreement has not been reached. In fact, in May 1979, during their 97th session, the ICAO Council decided to request all member States to take no action before January 1, 1988, and then to limit any prohibition of operations by noncomplying airplanes only at the most noise sensitive airports. Since U.S. airports that are served by international flights tend to be among the largest and busiest U.S. airports, the noise impact on those airports is also among the most serious.

In light of the noise control and abatement objectives of § 611 of the FA Act and as a result of the recently enacted ASNA Act, the FAA must proceed with rule making requiring compliance by 1985 unless, for a limited period, an airplane is specifically excepted or exempted. At the same time, the FAA is fully aware of the expectations of foreign air carriers and commercial operators that 1985 would be the earliest noise compliance date they would face in the United States if the ICAO mechanism did not produce an agreement by January 1, 1980.

Without action to mitigate the noise contribution of airplanes engaged in foreign air commerce, the current rule (which does not apply in all cases to those aircraft) provides only partial relief, and places the responsibility for airport noise reduction primarily on the operators of U.S. registered aircraft not engaged in foreign commerce.

As a result of the impact of aircraft noise on airport neighbors, serious pressures have developed that could threaten the continued growth of healthy national and international air transportation systems. Those pressures have led to restrictions on airport usage such as curfews, restrictions on the use of certain aircraft, opposition to airport development and serious liability exposure for existing airports.

To provide an overall perspective, consider that there are over 13,000 public airports operating in the United States. Those airports vary widely in their size, closeness to populated areas, and aircraft mix. Some of those airports are among the busiest in the world, with 84 airports having more than 200,000 annual operations, 160 airports having more than 150,000 operations each year, and well over 200 airports having more than 100,000 annual operatons. The busiest airports are generally located in the vicinity of the larger metropolitan areas and, thus, affect a significant number of people.

Underlying this amendment to Part 91 of the Federal Aviation Regulations are several years of study by the FAA of the considerations and objectives of § 611 of the FA Act and the recently enacted statutory mandate. The conclusion is that, both from the standpoint of the quality of life in hub airport environments and from the standpoint of the preservation of strong national and international air transportation systems, Federal action is required to ensure that all aircraft operated to and from airports in the United States achieve noise levels at least equivalent to current Part 36 ("Stage 2") noise requirements.

V. Title III, Aviation Safety and Noise Abatement Act of 1979

Title III of the ASNA Act of 1979 requires the Secretary of Transportation, acting through the Administrator of the FAA, to make certain changes in the aircraft operating noise limits rule contained in Subpart E of Part 91. This amendment contains those required changes, outlined as follows:

Section 302 requires the completion of rulemaking to require both foreign and domestic operators engaged in foreign air commerce to comply with rules comparable to those currently contained in FAR Part 91, Subpart E. Under that section, the rulemaking would have had to conform to any pertinent agreement reached through the International Civil Aviation Organization (ICAO) by January 1, 1980. Although such an agreement was not reached, that section also permits the rules to require operators engaged in foreign commerce to comply with either the present domestic rule (contained in Parts 36 and 91) or ICAO Annex 16, if the Annex 16 standards "are substantially compatible" with the rule contained in

Parts 36 and 91. Thus, the FAA will examine, on a case-by-case basis, any requests for a determination of equivalency. It will determine whether, as applied to specific airplane models, the noise requirements of ICAO Annex 16 are substantially compatible with, and achieve results equivalent to those achievable under, current Part 36. Thus, this amendment requires compliance with the same noise requirements for all operators engaged in foreign air commerce in the United States, regardless of whether the operator is U.S. or foreign and regardless of the State of manufacture or registry of the airplane.

Section 303 provides a "new technology aircraft incentive" by permitting continued operation of noncomplying ("Stage 1"), two-engine and three-engine airplanes until no later than January 1, 1986, and January 1, 1985, respectively, if the airplane will be replaced by a "Stage 3 airplane." To qualify, the operator must have an FAA approved replacement plan based on a binding contract entered into before January 1, 1983, specifying a delivery date for the replacement airplane before the applicable compliance date.

Section 304 entitled "small community service exemption" provides for issuance of exemptions to operators of noncomplying ("Stage 1"), two-engine airplanes to provide air transportation services. Those exemptions expire on January 1, 1988, for airplanes with 100 passenger seats or less, and on January 1, 1985, for airplanes with more than 100 passenger seats (as those airplanes were configured on December 1, 1979, or at an earlier date established for any particular airplane). If an airplane covered by an exemption is sold, or otherwise disposed of, to another person after January 1, 1983, it is no longer exempted and is subject to the requirements that the airplane be brought into compliance before further operations in the United States.

Section 305 rescinds the current limitation in Subpart E concerning the permissible use of noise level "tradeoffs" when demonstrating compliance with Part 36.

VI. Comments and Responses

The FAA received 42 comments from a broad spectrum of interested persons in response to Notice No. 80-7, including domestic and foreign governmental bodies, aviation industry and trade organizations, and airplane operators, and airport owners and operators. Some commenters supported the proposals, particularly those granting relief from the original compliance schedules for two-engine and three-engine airplanes. Most foreign commenters objected strongly to extending the operating noise limits to foreign registered airplanes operated by foreign operators engaged in air commerce in the United States. Comments and FAA's response to them are discussed as follows:

Applicability to Airplanes Engaged in Foreign Air Commerce

Fourteen comments were received; most objected to the proposal to require foreign registered aircraft to meet the requirements of Subpart E of FAR Part 91. The commenters expressed their belief that matters affecting the economic operation of international air transport services should be resolved multilaterally, rather than through unilateral action by a single nation. In that connection, most of these commenters expressed their belief that noise standards affecting international operators should be developed by the International Civil Aviation Organization (ICAO).

One commenter (the Government of the United Kingdom) is representative of those views in stating:

> Civil aviation is an international activity, and cooperative efforts are essential to ensure both efficient air transport operations and the orderly development of international civil aviation. The chief forum for this cooperation is the International Civil Aviation Organization (ICAO) * * * It has been a common principle of action in this field that, while states may naturally introduce whatever regulations they wish for aircraft on their own national register, they should not introduce regulations for foreign-registered aircraft in the absence of international agreement.

The FAA basically agrees with these statements of principle, preferring requirements based on international agreement. In the Aviation Noise Abatement Policy issued on November 18, 1976, the DOT/FAA stated:

> The United States will seek early agreement through the International Civil Aviation Organization (ICAO) on noise standards and an international schedule for compliance with Annex 16 or Part 36. In the event that agreement is not reached within three years, from January 1, 1977, then regulatory action will be taken to require all airplanes operated by all international operators to meet the noise level standards of Part 36 or Annex 16 during the five-year period thereafter at a phased rate of compliance similar to that established for domestic operations. The ultimate requirements applied to U.S. international flag carriers will not be any more stringent than those applied to foreign competition. Where U.S. air carriers serve both domestic and foreign routes, the delayed international requirements will be applied only for that percentage of total operations that are in international service. These requirements may be superseded by agreement reached through ICAO, in which the United States concurs and which does not discriminate against U.S. carriers. (That policy statement is reflected in § 302 of the ASNA Act as statutory mandate.)

For the above reasons, application of Subpart E to aircraft engaged in foreign air commerce was effectively delayed for three years to give ICAO additional time to reach agreement. As adopted in 1976, Subpart E did not apply to foreign registered aircraft, while operators of U.S. registered aircraft engaged in foreign air commerce could elect to apportion their fleets. However, in accordance with the above stated policy and in accordance with § 302 of the ASNA Act, overriding concern for the health and welfare of the Nation's citizens and fairness to the Nation's domestic operators requires that in the absence of international agreement, the United States proceed with adopting appropriate rules for operating in the United States.

Many commenters asserted that, indeed, there had been an international agreement reached through ICAO. Indeed, enormous efforts were made within ICAO to resolve this question. However, on May 9, 1979, the Council of ICAO transmitted (by the Secretary General's June 19, 1979, letter AN 1/54.7-79/106) a request that all contracting states:

> (a) Not prohibit before January 1, 1988, the operation of foreign registered subsonic jet aeroplanes not conforming to the noise certification standards of Chapter 2, Part II of Annex 16 (Third Edition) into and out of their territories;
>
> (b) Limit prohibition of operations to those airports which have been identified by them as having noise problems and have been so declared through appropriate means and to inform ICAO accordingly.

No vote was taken in the ICAO Council; the decision was developed by consensus. Reservations of endorsement were recorded regarding the date in the first paragraph by the representatives of Canada, the Federal Republic of Germany, Japan, and the United States. The representative of the People's Republic of China recorded his abstention to the action as a whole.

The FAA does not agree that the ICAO Council decision constitutes the agreement contemplated by the 1976 policy statement or that it constitutes "noise standards and an international compliance schedule" as contemplated by § 302 of the ASNA Act. It proposes no action until 1988. It is silent on any actions during or after 1988 and, therefore, does not meet the stated needs of the United States as enunciated by the FAA and Department of

Transportation more than three and a half years ago. Accordingly, the United States must proceed to regulate airplane operations under U.S. law.

One international aviation body, the European Civil Aviation Conference (ECAC), reported on its earlier efforts to negotiate among members a different type of fleet noise level limitation. Their suggestion was to "offset" a limited number of noisy aircraft through the use of quieter aircraft. Their comment suggested that the FAA might consider this or some similar method as a basis for "finding a mutually satisfactory arrangement." While the FAA is considering several cumulative noise evaluation systems (in a separate regulatory action required by Title I of the ASNA Act) for use around U.S. airports, it is not practical at this time to apply that type of methodology to the regulation of aircraft fleet composition on a nation-by-nation or airline-by-airline basis.

The International Air Transport Association (IATA) suggested that the FAA could adopt the rule as proposed but add a clause to the effect that the rule would not apply where it is inconsistent with an obligation assumed by the United States to a foreign country in a treaty, convention or agreement. The United States would then, in good faith, negotiate mutually acceptable compliance dates with foreign governments, individually or collectively, covering their carriers who serve airports in the United States.

The FAA notes that the suggested additional clause is unnecessary since most regulations (not just Subpart E of Part 91) can be superseded by international agreement.

Use of Part 36 or Annex 16 Noise Levels

Sixteen comments addressed the issue of using either FAR Part 36 or ICAO Annex 16 certificated noise levels to determine compliance under Subpart E for foreign operators. Fourteen of those urged the use of Annex 16, while two suggested that compliance with either noise standard should be accepted under the rule.

Several reasons were advanced for adopting the Annex 16 method and levels. One stated that even if the objections to unilateral action did not exist, or can be resolved satisfactorily, it would be essential for the United States to accept the international standards for foreign-registered aircraft contained in ICAO Annex 16, Chapter 2, specifically the noise levels.

The commenters questioned the justification in the preamble to the notice for requiring Part 36 levels, stating it was "feeble and contains errors of logic." The commenters felt that in pointing to technical differences between Part 36 and Annex 16, the FAA failed to recognize that in practice those differences are "imperceptible." The commenters felt that while Annex 16 does not include operational requirements like those in Part 91, Subpart E, the preamble failed to note either that neither does Part 36 (which is the U.S. national "equivalent" of Annex 16) or that Annex 16 was referred to in the ICAO Council's May 9, 1979, request. The commenters stated that the preamble to the notice suggests that use of Annex 16 for the international portion of the U.S. rule could, for some U.S. operators, create two distinct fleets, but fails to recognize that use of part of Part 36 would, for some foreign operators already operating Annex 16 airplanes, create a second distinct fleet of the same type having to meet the U.S. requirements. The commenters frequently contended that use of Annex 16 would not tend to reduce the protection to the public health and welfare intended by the proposal, that the differences in reduction are effectively nonexistent, and that the proposed rule ignores the clear intent of Congress that Annex 16 be the standards applied to foreign air carriers, regardless of whether or not the U.S. accepts that ICAO has reached an agreement on the matter.

The FAA appreciates the views expressed in these comments. However, it should be noted that FAR Part 36 and ICAO Annex 16 are not competing or fundamentally differing aircraft noise standards. They are, indeed, a part of the same carefully coordinated international regulatory fabric. The Chicago Convention established the basic framework for close international cooperation in the development of a broad range of aviation standards, including noise. Article 37 of the convention commits each signatory to collaborate in securing the highest practicable degree of uniformity in international standards, such as Annex 16. However, Article 38 provides that any State which considers it necessary to adopt regulations or practices differing from those established by an international standard need only notify the ICAO of those particular differences. Article 38 thereby recognizes the right of any State to adopt regulations differing from those in an ICAO standard. In this connection, in certain respects, Annex 16, Chapter 2, is less stringent than the "Stage 2" noise requirements of Part 36 for two- and three-engine airplanes but achieves equivalent results for airplanes with four engines that do not have a high bypass ratio.

The United States has been, and remains an active contributor and participant in the development of Annex 16. As a result, Annex 16 and Part 36 share more characteristics than those in which they differ. They use the same noise unit and, generally, the same noise tests. In adopting the more stringent standards for new types of airplanes, both ICAO and the FAA promulgated nearly identical rules. As a result, ICAO Annex 16, Chapter 3, and FAR Part 36 "Stage 3" noise limits and test procedures are "substantially compatible" under the meaning of the ASNA Act of 1979. The two achieve the equivalent results. Therefore, it is the intent of the FAA to accept from operators engaged in foreign air commerce demonstrations of compliance with Chapter 3 of Annex 16 as meeting the noise requirements of Subpart E of Part 91. Of course, that accommodation does not waive or otherwise modify other requirements to demonstrate literal compliance with Part 36, such as actual certification for the issuance of U.S. type certificates and standard airworthiness certificates.

Other portions of Annex 16 are not "substantially compatible" with the corresponding requirements of Part 36 and do not assure equivalent results. Significant differences occur in test conditions, test equipment, and microphone locations, but the most important differences are in how the airplanes are flown during noise tests. Annex 16 allows engine power to be cut below that power allowed during Part 36 testing. Further, the Annex allows this cutback to be applied to two-engine and three-engine aircraft earlier than would be allowed under the U.S. specifications. For example, those differences, when applied to several widely used airplanes, could result in masking the following increases in takeoff noise level:

Takeoff

B-727—3.9 dB
B-737—4.5 dB
DC-9—4.9 dB
A-300—2.5 dB
BAC-1-11-500—5.5 dB

Further, increases of 1.5 to 2.5 decibels (dB) and 0.3 to 0.4 dB could occur on sideline and approach. An additional 1.0 dB tradeoff would also be allowed between takeoff, sideline, and approach noise measurements. Clearly, whether or not such increases were applied for these particular airplanes, standards that would allow such differences

cannot be said to be "substantially compatible" or equivalent in results. Details of the technical differences between the two standards are presented in the following table. It also presents a quantitative approximation of the impact of each difference in terms of certification noise levels and noise-limited takeoff gross weights.

ICAO Annex 16, Chapter 2/FAR 36 (in effect on Jan. 1, 1977), Stage 2 Differences Related to Notice No. 80-7

FAR 36, stage 2	ICAO annex 16, chapter 2	Estimated impact of differences
FAR 36, Appendix A	*Appendix 1, Annex 16*	
1. A36.1(b)(3). Ambient temperature test day lower limit 41° F.	2.2.3. Ambient temperature test day lower limit 36° F.	The difference in the lower limit on the test day weather window is not quantifiable. The lower value allowed by Annex 16 could result in test being conducted under conditions leading to large values of atmospheric absorption. This in turn would require larger corrections when adjusting the as measured data to reference day values.
2. A36.1(d)(3). * * * minimum distance of 370 ft at approach measuring point (1.0 NM from threshold).	Chapt. 2, Para 2.3.1(c). Approach measurement point 394 ft vertically below the 3° descent path at position 1.08 NM from threshold.	The approach path measurement location difference appears in several parts of the standards and will be discussed with the Appendix C test condition differences.
3. A36.2(d)(6). The amplitude resolution of the analyzer must be at least 0.25 dB.	3.4.6. The amplitude resolution of the analyzer shall be 0.5 dB or less.	The analyzer amplitude resolution requirements in FAR 36 inherently leads to greater measurement accuracy. The resulting noise level differences cannot be quantified; however, the analyzer specifications could result in less precision than would be expected with the FAR 36 specifications.
4. A36.2(d)(8). The dynamic range of the analyzer shall be at least 55 dB.	3.4.8. The dynamic range of the analyzer shall be at least 45 dB.	The analyzer dynamic range requirements in FAR 36 should lead to the acquisition of more noise data and hence to greater measurement accuracy. Again the resulting noise level differences cannot be quantified; however, the Annex 16 analyzer specifications could result in loss of data and in less precision than would be expected with the FAR 36 specifications.
5. A36.3(b)(3). * * * atmospheric environmental data, measured at hourly intervals or less during test.	5.2.3. * * * atmospheric environmental data measured immediately before, after, or during each test * * *.	The advantage of frequent atmospheric measurements depends on the length of the test period and the variability of the atmosphere. Again noise level differences cannot be quantified.
6. A36.3(d)(2)(a). * * * data corrected to approach aircraft height of 370 feet * * * (see A36.1(d)(3) above.	5.4.2.1(b). * * * data corrected to aproach height of 394 ft.	As with No. 2, this reference to approach conditions will be addressed below.
FAR 36, Appendix B	*Appendix 1, Annex 16*	
7. B36.5. Duration correction: If PNLT(k) at the 10 dB down points is 90 PNdB or less, the value of d may be taken as the time interval between the initial and the final times for which PNLT(k) equals 90 PNdB.	4.5.1.3. If PNLTM is less than 90 TPNdB, the duration correction shall be taken as equal to 0.	In this case, the Annex 16 correction was better than the FAR 36 correction. Actually neither was appropriate but in some cases the original B36.5 procedure, which was subsequently amended, erroneously resulted in negative corrections as large as 13 EPNdB. This amendment (Amendment 36-5) became effective on September 20, 1976; hence, some prior certification could include the improper correction.
FAR 36, Appendix C	*Chapter 2, Annex 16*	
8. C36.3(a). Takeoff point 3.5 nautical miles from start of <takeoff roll.	2.3.1(b). Takeoff point 6500 m (3.51 NM) (difference of 60.8 ft).	The small difference in takeoff measurement point location would result in less than 0.1 dB difference in measured takeoff noise levels.
9. C36.3(b). Approach point 1 nautical mile from threshold.....	2.3.1(c). Approach 2000 m (1.08 NM) from threshold. (486 ft difference in displacement; 394—369=25 ft. height).	The difference in approach measurement point location would result in Annex 16 measured noise levels approximately 0.3 to 0.4 dB lower than those measured in a FAR 36 certification.
10. C36.3(c). Sideline point 0.25 nautical miles from runway centerline except for more than three *turbojet* engines, this distance must be 0.35 nautical miles.	2.3.1(a). Lateral point 650 M (.351 NM) from runway centerline (Difference 6 ft for 4 engine aircraft and 613.7 ft for 2 and 3 engine aircraft; i.e., 2,132.7 vs. 1,519.0 ft).	The difference in sideline measurement point locations for two and three engine aircraft would result in Annex 16 measured noise levels approximately 1.5 to 2.5 EPNdB lower than those measured in a FAR 36 certification. For the four engine aircraft the measured noise levels would be the same under the two procedures.
11. C36.5(b). Tradeoff. Sum of exceedances not greater than 3 EPNdB and no exceedance greater than 2 EPNdB.	2.5.1. Sum of exceedances not greater than 4 EPNdB and no exceedance greater than 3 EPNdB.	The difference in tradeoffs would probably be noted at the takeoff or approach measurement points since Stage 2/Chapter 2 sideline values have generally been low enough to provide the trading margin. Under the <tradeoff provisions an increase of as much as 1 dB would be acceptable at one of these two points under an Annex 16 certification.
12. C36.7(b). Takeoff power or thrust must be used to the point at which altitude at least 1,000 ft above runway reached except for airplanes with more than three turbojet engines this altitude must not be less than 700 ft.	2.6.1.1. Takeoff thrust shall be used to a point at which height is at least 210 m (700 ft) above runway.	The difference resulting from the lower Annex 16 cutback altitude (700 ft), for two and three engine aircraft is particularly difficult to quantify since the best cutback altitude is usually identified as the result of an optimization process. Actually for two engine aircraft the optimum cutback altitude is probably above the 1,000 ft FAR 36 requirement, hence there should not be an impact on two engine aircraft noise certification levels. For three engine aircraft the lower allowed cutback altitude probably provides time for a noise reduction due to reduced thrust for the Annex 16 certification test which would not be allowed under a FAR 36 test. The magnitude of the reduction for three engine aircraft is aircraft specific (i.e., powered by high or low bypass engine, small narrow-body or large wide body, etc.), and could be approximately a 3 to 4 EPNdB lowering of certificated takeoff noise levels.
13. C36.7(c). * * * the power may not be reduced below that which will provide level flight with one engine inoperative or that which will maintain a climb gradient of at least 4 percent, whichever is greater.	2.6.1.1. * * * the thrust thereafter (i.e., after cutback), shall not be reduced below that thrust which will maintain a climb gradient of at least 4 percent.	The requirement specifying the thrust level after power cutback has possibly the largest impact in terms of differences in Annex 16, Chapter 2, and FAR 36, Stage 2 certification noise levels. The differences are noted in allowable maximum takeoff weight as well as in noise level and apply only for two and three engine aircraft. Noise level differences have been identified for aircraft with takeoff gross weight over 75,000 pounds ranging from 0.6 to 6.0 EPNdB. The two engine aircraft reported, specifically, the B-737-200, all DC-9's, BAC 1-11-500's, and the A-300 B1/B2 would have respectively, 4.5, 4.9, 5.5, and 2.5 EPNdB lower certificated noise levels if measured by Annex 16 instead of FAR 36 procedures. The three engine aircraft reported, namely the B-727-200 and the DC-10's would have, respectively, 0.9 and 1.0 EPNdB lower noise levels. In terms of impact on maximum allowable operational takeoff weight, the B-737, DC-9, and BAC 1-11 aircraft could operate at approximately 35,000 pounds greater weight under Annex 16, Chapter 2 than under FAR 36, Stage 2. Correspondingly, the A-300, B-727, and DC-10 could realize weight increases of 45,000, 10,000, and 33,000 pounds if certificated under Annex 16 rather than FAR 36.

In summary, the FAA concludes that these differences are collectively significant, particularly for two-engine aircraft which are eligible for exemption under § 91.307. The practical, immediate effect of the application of Part 36 noise requirements to those airplanes is, thus, greatly minimized. While the FAA intends to accept certain demonstrations of compliance under portions of ICAO, Annex 16, it is not adopting a less stringent standard for some foreign operators that might require, to avoid undue discrimination, the adoption of that same less stringent standard for all operators engaged in foreign air commerce in the United States. To do so would impinge upon the additional beneficial effects already achieved under Stage 2 noise levels of Part 36. It could also put in an unreasonable position those aircraft operators (especially U.S. domestic operators) who have already ordered or placed into service Part 36 equipment or replacement aircraft or who have placed operating limits on the certificates of their airplanes to meet the current Subpart E requirements. It could also contravene the nondiscriminatory requirement of § 302 of the ASNA Act.

The nondiscriminatory posture is not affected by a distinction between airplanes engaged in domestic air commerce and those in foreign commerce. That distinction was an essential element of the original 1976 rule. Accepting certain noise levels under ICAO Annex 16 that are shown to be the equivalent of those achieved under Part 36 removes the legal impediment to demonstrating and accepting noise levels that are equivalent. However, the noise levels must, in all cases, be shown under conditions fully consistent with the certification basis of the airplane as determined by the certificating authority. In other respects, the determination of equivalency is based solely on whether compliance with the requirements of Part 36 have been shown or would have been shown had compliance with the provisions of Part 36 been the objective.

An indiscriminate approval of Annex 16 as equivalent to Part 36 would result in noisier aircraft being introduced into this nation's airports. Such approval might also result in the application of less acoustical technology to existing airplanes than is already planned. Because of the logarithmic nature of sound pressure levels and their perceived effects on humans, much of the expected benefit of the compliance program would be lost forever to this Nation's citizens. As a result, such a decision could be expected to encourage the proliferation of local airport actions designed to counter the increasing noise impact. The FAA does not believe that this scenario would be beneficial to the orderly development of either air commerce or international comity.

The noise requirements proposed and those adopted apply the same noise standard to all operators of affected aircraft operated in foreign air commerce in the United States regardless of whether the operator is U.S. or foreign, and regardless of the State of manufacture and registry of the airplane. The FAA has carefully considered whether the same rule can properly apply across the board and concluded, for the reasons presented in the notice and this preamble, that the differences in treatment already built into the rule, together with those being adopted by this amendment, adequately and properly reflect the distinctions that can and should be made.

The FAA continues to be concerned about the artificial creation of two "complying" fleets. In fact, however, for most of those American-manufactured aircraft operated by foreign operators for which retrofit or reengining hardware has been developed and certificated, the modified airplanes meet Part 36 requirements. Information currently available to the FAA appears to indicate that only a very limited number of airplane models affected by the rule cannot meet the Stage 2 noise level requirements under Part 36 but can meet the requirements of ICAO Annex 16, Chapter 2, by using available technology. Under the rule, both foreign and domestic operators of these aircraft will have the same equipment and applied acoustical technologies. However, under the suggestions offered by commenters, if some Annex 16 airplanes were permitted to be flown under the rule and those airplanes are not shown to meet Part 36, they still could not be transferred to operations in domestic U.S. service after 1985. That would impose a needless burden on both U.S. operators and the FAA to segregate the two complying fleets.

This issue has several other facets. For one, British Aerospace reports that it has expended considerable funds in developing hushkits for its two-engine, BAC 1-11 series aircraft. Because of its research and development program, it has developed a hushkit available to retrofit existing BAC 1-11 aircraft, which is incorporated in all current production models. That kit, according to the commenter:

"Represents the best standard of silencing which can be built into this aircraft, and enables all varieties of BAC 1-11 to meet the standards of Annex 16. However, the later and more developed series of 1-11's, while being able to comply with Annex 16 by means of this hushkit cannot comply with the standards of Part 36, by a small margin. Several of these aircraft are operated by airlines into the United States of America, and would be affected by these proposed regulations. As the hushkit which is available represents the highest standard of silencing technology applicable to this aircraft type, we consider it is economically unreasonable and not in the public interest that these aircraft should be prohibited from continuing to conduct operations into the States".

Similar views were fully addressed in the 1976 preamble adopting the original rule and, thus, are not repeated here. However, FAR Part 11 exemption process provides an adequate administrative mechanism to grant relief from strict compliance in particular cases when found to be in the public interest and consistent with the provisions of the ASNA Act. While no predetermination can be made or should be inferred for any specific aircraft, operator, or situation, the FAA is mindful of the purposes and limitations under Part 11 as a mechanism providing the needed flexibility under the rules. We also note that the two-engine BAC 1-11 airplanes would be able to operate in the U.S. until January 1, 1985, or January 1, 1988, under the service to small communities exemption provisions of the rule for all two-engine airplanes.

Final Compliance Dates

Fifteen comments were received on the proposed January 1, 1985, compliance date for aircraft operated in foreign air commerce. Most of these comments were discussed previously under the discussion on applicability of the rules. However, the British Government pointed out that they have adopted a January 1, 1986, limit on the operation of aircraft not complying with Annex 16 on their aircraft register. They pointed out that the effect of the proposed regulations would be to prohibit the use of the affected UK-registered aircraft in the United States during the last year of their permitted

use in Great Britain. The commenter does not suggest that a large number of aircraft would be involved, but that the effect of such a prohibition could be serious for a number of their operators, particularly second-line operators and cargo operators, for whom no satisfactory, complying aircraft is available to replace aircraft on long range, "thin" routes, or on route developments which could not support larger aircraft.

While the FAA recognizes the cited needs that may arise in individual cases, the ASNA Act does not provide that discretion for not applying the 1985 date, except with regard to the two exemptions contained in the ASNA Act and the traditional Part 11 exemptions.

Phased Compliance

Several comments were received on the FAA's proposal not to prescribe for aircraft operated in foreign air commerce the same schedule for phased compliance imposed on U.S. registered airplanes. One commenter (the Town-Village Aircraft Safety and Noise Abatement Committee of the Town of Hempstead, New York) suggested that it would be very desirable to have an interim deadline in the rule so that the carriers affected would have to begin movement toward compliance before 1985 in enough time to ensure that the 1985 deadline will be met by all carriers affected. Other commenters welcomed the fact that no structured phased compliance schedule was proposed.

The imposition of phased compliance schedules would provide no meaningful relief. Nearly all foreign carriers serving the United States already own and operate some complying airplanes, and operate some airplanes entirely outside of the United States. Enforcement of any phased compliance rule would of necessity involve complex reporting and bookkeeping requirements to verify operation of specific airplanes in the United States and percentages of total operations by those airplanes. Experience with the domestic, phased-compliance rule has shown such enforcement to be time-consuming and laborious for both operators and government. While the domestic compliance plan requirements are an important complement of that rule, its successes are achieved in large part because all the aircraft are on the U.S. registry, are flown at least in part in the United States, and direct communications with the operator is possible. Such is not the case with foreign operators serving the United States with varied equipment and sometimes on an infrequent basis. Further, as a practical matter, complying airplanes serving the United States will necessarily be phased-in in order to meet final compliance dates. The rate of that compliance is less important to require by rule than is assuring there is a mechanism for monitoring the progress towards that compliance. That mechanism already exists for foreign operators. There is no indication that the rate of phased compliance would be greater were it prescribed in the rules.

Replacement Airplanes

Several commenters expressed their concern with the lack of replacement airplanes for those four-engine aircraft currently in their passenger or aircargo fleets. One commenter (Zantop International Airlines) suggested that procedures be established which will preserve the integrity of the current U.S. Civil Reserve Air Fleet, pending the availability of replacement of all-cargo aircraft. There is no substantial evidence of either a lack of complying passenger or all-cargo aircraft available on the free market, or a shortage of such aircraft that will develop between now and 1985. There is also no requirement that four-engine aircraft be replaced only by another four-engine aircraft. Therefore, there is no compelling reason to create a different set of regulations for the replacement of cargo aircraft from those covering replacement of passenger-carrying aircraft. However, the FAA will continue to monitor those situations carefully and will consider, if necessary, appropriate relief under § 611 of the Act and the ASNA Act.

Service to Small Communities Exemption

Fourteen comments were received on this feature of the proposal. Thirteen of those approved of the proposed exemption but expressed concern that the language in the notice did not correctly reflect the intent of the ASNA Act. Specifically, commenters questioned proposed § 91.307 because it appeared to create an element of administrative discretion in the granting of the service to small communities exemptions. They expressed the view that § 304 of the ASNA Act was clear and unambiguous and did not provide for such discretion. The only discretion authorized by § 304 is that limited authority to provide relief from the December 1, 1979, eligibility date for the 100-seat configuration standard in order to avoid unreasonable hardship or advantage for a carrier's ability to utilize the small community exemption provision.

The FAA agrees that § 304 of the ASNA Act does not confer discretion in granting service to small communities exemptions covering eligible aircraft under terms of the ASNA Act. Section 91.307 does not attempt to impose such a limitation but uses the statutory language to distinguish that special exemption from other exemptions issued under the Federal Aviation Act.

The FAA observes that in raising these objections to proposed § 91.307, the commenters did not contend that Congress enacted the exemption in § 304 for purposes other than maintaining small community service. As a practical matter, small community service in fact will be a primary result of the exemption. It is nevertheless apparent that Congress chose to avoid making definitive judgments or providing criteria as to what constitutes "small community service." The term is not defined in the ASNA Act or its legislative history. Persons familiar with airline operations know that such an attempt would either be futile or destroy the basic objective of § 304. Many airline and air cargo systems are fully integrated. Aircraft routing patterns simply do not permit assignments of particular aircraft to discrete missions such as "small community service."

In general, the FAA agrees with the views of those commenters who indicated the title "Small Community Service Exemption" does not legally impose any requirement of small community service as a condition for granting the exemption. The substance of the statutory and regulatory provisions (and the discussion in this preamble) were designed to promote that service to small communities.

Proposed § 91.307(a) says (in part), "the Administrator issues an exemption from the noise level requirements under this subpart to permit operation to provide services to small communities in the United States." The FAA did not propose and does not intend, to require operation to small communities either as a prior condition for the approval of the exemption or as a condition for continued operation under those exemptions. Nevertheless, to avoid future confusion on that point, § 91.307(a) has been edited to clarify that result.

There was one dissenter to providing the exemption prescribed by the ASNA Act for two-engine airplanes. A foreign government (United Kingdom) pointed out that the notice proposes less stringent requirements for two-engined airplanes on short haul flights in the United States. Since virtually all the noncomplying turbojets operating on the longer haul routes from Europe to the U.S. are four-engined airplanes, the commenter opined that the "small communities" exemption would likely

benefit only domestic U.S. operators. A domestic carrier operating the right type of airplane from a major airport to a small community could claim an exemption, whereas a foreign carrier operating the same type of airplane to the same major airport could not. Thus, the commenter felt there was an element of discrimination which is objectionable.

The FAA disagrees with that analysis. Since the exemption is available under the statute and the rule to all operators of two-engine airplanes, some of the most likely beneficiaries of the exemption are small operators engaged in air commerce including those providing air services between U.S. airports and various points in the Caribbean, Canada, and Latin America. It does not put foreign operators at a competitive disadvantage in serving the same markets. U.S. operators are no more able to use two-engine airplanes under the rule to serve U.S.-European markets than their foreign counterparts. Also, that commenter may have been influenced by the mistaken view that petitions for the exemption would be judged on the basis of the applicant actually providing service to small communities in the United States, rather than the Congressional basis for preserving aircraft capable of providing service to small communities. The statutory provision, which the Administrator must implement, limits the exemption to two-engine airplanes. The rule change cited above should allay that concern.

Many commenters stated that since the language of the ASNA Act provided for no discretion in issuing an exemption, § 91.307 should be rewritten to provide an "exception," rather than an "exemption," for two-engine airplanes. That approach to implementation was considered. However, the ASNA Act prescribes different termination dates based on prior seating capacities or future changes in ownership. Because of the administrative needs for monitoring and enforcing compliance status and plans, the FAA has determined that the small communities provision can be administered most effectively and expeditiously as an exemption. Thus, no change has been adopted as a result of that comment.

One commenter (Air Transport Association) noted that, as proposed, the two-engine airplane exemption expires on any date after January 1, 1983, upon which the exempted airplanes change ownership (but not later than January 1985 or 1988, as appropriate for the seating configuration). That provision appears to present an unintended stumbling block in corporate mergers and acquisitions, where legal ownership may change but the use of the airplane would not change. Accordingly, the commenter suggested adding a new paragraph to § 91.307 to read—

> The exemption does not terminate when ownership changes due to acquisition or merger, and the airplane remains in substantially the same type of service for which it was used prior to the change in ownership.

After careful consideration, the FAA concludes that, with clarification, it is a reasonable, general interpretation of the provision that is in line with the perceived legislative intent. Further, it could simplify the administration of the exemption and is the type of guideline that the FAA would itself have to use in order to administer the small communities exemption. However, the FAA concludes that there are several limitations that must be imposed on that general interpretation and that the interpretation should not be incorporated into the rule itself.

The FAA has no problem with the position that under § 304 of the ASNA Act an exemption issued to an operator covering eligible, two-engine airplanes does not terminate under that Act because of a simple change in the operator's name, a traditional corporate merger of two or more corporations (such as when Southern Airways, Inc. and Ozark Air Lines, Inc., legally merged under the State and Federal law to create Republic Airlines, Inc.) or because of a traditional corporate acquisition of one company by another (such as when Pan American World Airways, Inc., legally acquired the corporate assets and liabilities of National Airlines, Inc.). In other situations, however, the sale, lease, or other disposition of an airplane covered by an exemption would, by operation of § 304, terminate that exemption at the time of delivery of that airplane to another legally recognized "person." The form and effect of a particular disposition and subsequent use of affected airplanes may need to be examined to determine whether it is covered by the termination provisions of § 304. Thus, § 91.307 is a generally applicable rule which is not susceptible to adequate or proper expansion, as suggested by the commenter, to delineate regulatorily each factor and consideration that could affect the application of the law to every case. It would be neither wise nor prudent to attempt to do so. Accordingly, the interpretation and application § 91.307 in implementing § 304 will be a matter for determination on an individual basis.

In that regard, the FAA notes that exemptions under the Federal Aviation Regulations are issued to persons to whom a regulation applies and grant particularized relief from requirements under specific circumstances. Part 91, Subpart E, prescribes rules applicable to the operators of the specific airplanes covered by the rule. Similarly, exemptions, including those issued pursuant to § 91.307, are issued to operators and cover specific activities or airplanes. Monitoring of termination dates under § 91.307 necessarily can be achieved through that procedure because an exemption is not transferable with the airplane to another person and a new operator is not authorized to operate the airplane covered by an exemption issued to a previous operator. In the cases where the "exemption" authorized by § 304 does not terminate by operation of law, an exemption to the new operator would be issued routinely to cover the airplane and its operation by that operator. The procedures of FAR Part 11 apply to the application for and issuance of an exemption to an eligible operator. However, for an original issue exemption based on seating capacity on December 1, 1979, (covering an airplane not previously covered by such an exemption), the nondiscretionary aspect of § 304 authority to grant the exemption constitutes the requisite "good cause" for waiving the full 120-day filing requirement (§ 11.25(b)). Those petitions should be made at least 30 days before the proposed effective date of the exemption. Federal Register publication of notice of receipt of petitions (§§ 11.27(c) and (f)) and disposition of petitions (§ 11.27(e)) will occur, however. In other respects, petitioners for service to small community exemptions must follow Part 11 procedures and present sufficient information to determine their qualification for an exemption. It must provide information covering operation of specific, eligible airplanes and the seating capacity of each affected airplane to determine maximum duration of the exemption. The exemption, when issued, will specify the expiration date of the exemption for each airplane covered by the exemption document. Modification of the exemption after issuance will permit airplanes to be added or deleted from the exemption under the rules. Thus, an operator will need and will be issued only one service to small communities exemption document but that document

will cover all eligible airplanes covered by the exemption provisions.

Other Issues

No comments were received that specifically addressed either the use of "tradeoffs" in showing compliance with the provision of Subpart E or the proposal not to extend the compliance plan reporting requirements to foreign operators or to adjust the content requirements for plans. Those portions of Notice No. 80-7 are adopted as proposed.

Several foreign commenters suggested that the FAA not introduce noise certification as an operating rule for foreign operators because of the dangerous precedent this could create in respect of other airworthiness matters. One commenter in particular suggested that the proposed rule would be the equivalent of the United States failing to recognize as valid the certificates of airworthiness of foreign registered aircraft which do not comply with Part 36. Similar concerns were expressed by several commenters. Apparently, the basis for this concern was the perception of the unilateral action by the United States previously discussed and the effect that this perception could have on other aircraft certification and airworthiness agreements reached by ICAO under the Chicago Convention.

This amendment is directed at the operation of aircraft in the United States. It is not directed at airworthiness certification or authority of ICAO member States. Article 33 of the Chicago Convention requires reciprocal recognition of certificates of airworthiness by contracting States, provided that the requirements under which they are issued are equal to or more stringent than ICAO minimum standards. It was argued that, because of that requirement, the United States must accept for all operations foreign registered aircraft certificated to Annex 16 standards. What that argument fails to consider is that this amendment does not in any way affect U.S. recognition of foreign certificates of airworthiness. It is merely a restriction on operations of certain airplanes in and out of U.S. airports. Other operations of affected airplanes, such as overflights of U.S. territory, are not affected. If the United States were refusing to recognize those foreign airworthiness certificates, all operations including overflights would be prohibited. Thus, this amendment is clearly an operating rule and not an action refusing to recognize foreign certificates of airworthiness. The Chicago Convention, in Articles 11 and 12, recognizes the right of each contracting State to promulgate and enforce rules of the air, as long as they are applied to the aircraft of all contracting States without distinction as to nationality. Further, as previously discussed, Article 38 recognizes the right of any State to adopt necessary regulations that differ from those established by an international standard. This rule falls squarely within those authorities.

It is also important to note that the United States did not undertake lightly this action to promulgate an operating rule but did so only after repeated entreaties to ICAO to provide leadership in this matter and with adequate notice of U.S. needs and intentions. The subject was first brought under international discussion in an ICAO special meeting in November 1969. In November 1976, the United States announced its intention to require operators engaged in foreign commerce in the United States to comply with the operating noise limits rule by 1985. By that time more than 15 years will have elapsed since the matter was first broached in the ICAO. At this time, based on their May 1979 decision, there is no assurance that the ICAO will endorse an international standard governing operating noise levels even after the 1988 date in that decision.

One commenter expressed particular concern with the possibility that some United States airports would apply more stringent regulations of their own beyond these adopted by the FAA. That legitimate concern, however, is outside the scope of the subject and issues contained in Notice No. 80-7 which is based on Title III of the ASNA Act. It should be noted that Title I of that same Act delineates many of the actions that may be taken by airport proprietors and operators to identify and alleviate an airport community noise problem. Title I also provides for rules to govern submission of these proposed actions for FAA review on an airport-by-airport basis and charges the FAA with the responsibility to disapprove any proposed actions or combinations of actions that "create an undue burden on interstate or foreign commerce." At this time, the FAA is preparing regulatory action to implement Title I. Most, if not all, of the commenters' concerns will be addressed in that rulemaking proceeding.

Several commenters noted that the Conference Report for the ASNA Act urged the FAA to give consideration to hardship situations involving smaller carriers operating four-engine airplanes where the carrier is making a good faith compliance effort but needed technology is either delayed or unavailable and rigid adherence to compliance deadlines could work financial havoc and deprive the public of valuable airline service. Some of those commenters recommended expanding this rulemaking action to provide specific criteria for granting that relief. After careful review, the FAA finds that it cannot meaningfully improve on the admonition of the Conference Report or on the provisions of FAR §§ 11.25 and 11.27 which contain specific procedures for petitioning and for granting such petitions under the rules in the particular cases presented. Therefore, while attention is specifically directed to the guidance provided by the Congress, no regulatory expansion or amendment is needed.

Three commenters included in their submissions requests for waivers or exemptions for specific foreign scheduled air carriers. The FAA cannot consider such requests in the context of this general rulemaking proceeding, but will consider each fully documented request submitted in accordance with § 11.25 of Part 11. However, pending adoption of this amendment, those requests were premature in seeking relief from requirements not yet issued or evaluated by those commenters to determine whether or what form of relief should be sought.

VIII. Section-by-Section Analysis of the Amendment

This action amends Subpart E of Part 91 of the Federal Aviation Regulations (14 CFR Part 91) which contains the operating noise limits and related requirements that apply to the operation of affected aircraft to or from airports in the United States. The following discussion outlines the changes to each affected provision reflecting Title III of the Aviation Safety and Noise Abatement Act of 1979.

A. Applicability to airplanes engaged in foreign air commerce

Section 91.301(a)(1) is amended to reflect the expanded applicability to Subpart E for civil subsonic airplanes engaged in foreign air commerce in the United States, regardless of the State of registry of the airplane. The provision is restructured and a new paragraph added to provide comparable treatment for foreign registered airplanes with maximum weights of more than 75,000 pounds. The new paragraph indicates that Subpart E applies if the airplane would be required by the Federal Aviation Regulations to have a U.S. standard airworthiness certificate in order to conduct the operations intended for that airplane were it registered in the United States. It also clarifies that the rule applies to operations to or from U.S.

airports, not to overflights of the United States. A new paragraph (a)(2) is added to indicate that there is no substantial need, and, thus, no requirement at this time for foreign operators to submit compliance plans and status reports. Compliance status of airplanes operated in the United States by foreign operators can be adequately monitored through the existing mechanisms covering those operations and airplanes. Accordingly, this amendment does not change § 91.308 to expand its application to foreign operators. Current paragraph (a)(2), concerning civil supersonic airplanes not affected by the proposals, is redesignated as paragraph (a)(3).

B. Relationship to Part 36

Paragraph 91.301(b) is revised to expressly incorporate the Part 36 definitions of "Stage 2" and "Stage 3" noise levels and of airplanes described in terms of those noise levels ("Stage 2 airplanes" and "Stage 3 airplanes"). Those terms are used whenever appropriate to identify more specifically the applicable Part 36 noise levels under Part 91, Subpart E. The paragraph is also expanded to provide the regulatory basis for the Administrator to determine that, solely for purposes of Subpart E, noise certifications under certain portions of ICAO Annex 16 are substantially compatible with, and achieve results equivalent to those achievable under, Part 36. Those determinations apply only to subsonic airplanes engaged in foreign air commerce.

C. Tradeoff provisions

Paragraph 91.301(c), governing the limited applicability of the tradeoff provisions of § C36.5(b) in showing compliance with Subpart E, is deleted. That change implements the legislative authorization to use "tradeoffs" in showing compliance with the provision of Subpart E (§ 305 of the ASNA Act).

D. Final compliance dates

Section 91.303 is amended to reflect the legislative authorization (§§ 303(b) and 304, ASNA Act) for extending the final compliance dates beyond January 1, 1985. (For some airplanes, full compliance is required before January 1, 1983, under § 91.305(b)(2)(ii).) The affected provisions govern two-engine or three-engine airplanes under FAA approved replacement plans (§ 91.305(d)(1)) or under the small communities exemption provisions for two-engine airplanes (§ 91.306). In other respects, the Stage 2 or Stage 3 noise levels still must be achieved according to the phased compliance schedule and by all affected subsonic airplanes by January 1, 1985, in order to operate in the United States.

E. Phased compliance

Section 91.305 prescribes the phased compliance schedule for U.S. registered airplanes operated under Parts 121 or 135, including provisions for extending those dates up to January 1, 1985, under an FAA approved plan for "replacement airplanes" that have been shown to comply with specified Part 36 noise levels. This amendment expands the general applicability of that section to include all affected airplanes operated in domestic U.S. air commerce, regardless of their State of registry. (That change is necessary to ensure that the noise abatement objectives of the rule are not inadvertently subverted in those cases where U.S. operators operate foreign registered airplanes in the United States under the recently adopted provisions of the International Air Transportation Competition Act of 1979.) For purposes of phased compliance, the rule distinguishes between airplanes operated in domestic U.S. air commerce, and those operated in foreign air commerce in the United States. The proposed amendment has been rewritten to clarify the applicability of each provision, including the continued applicability of phased compliance to U.S. operators of airplanes engaged in domestic and foreign air commerce in the United States. The notable exceptions are those airplanes covered by approved apportionment plans to engage in foreign air commerce and the airplanes operated under service to small communities exemptions (§ 91.307(a)). The exception provision of § 91.305(b) has been clarified to indicate that for purposes of phased compliance airplanes covered by one or the other of the exceptions are not counted among the number of airplanes for which noise level compliance must be shown or which may not be operated in the United States. Accordingly, the proportional, phased compliance must be achieved by the remaining, unexcepted airplanes.

For all airplanes engaged in foreign air commerce in the United States, regardless of the State of registry, compliance is required as follows:

(1) By January 1, 1985, for all affected airplanes (except those identified in paragraphs (2) and (3) below), including those previously operated under—

(a) An approved method of appointment (§ 91.305(c));

(b) An approved replacement plan (§ 91.306 (b) and (c); and

(c) A service to small communities exemption (§ 91.307(a)(3)).

(2) By January 1, 1986, for two-engine airplanes scheduled to be replaced under an approved plan (§ 91.306(a)); and

(3) By January 1, 1988, for two-engine airplanes having 100 passenger seats or less and previously operated under a service to small communities exemption (§ 91.307(a)(2)).

The provision for apportionment of airplanes engaged in foreign air commerce by U.S. operators under § 91.307 is redesignated under § 91.305(c). That provision is rewritten but continues to permit persons operating airplanes in both domestic and foreign air commerce in the United States to apportion those airplanes between the two kinds of operations. That is accomplished by electing to comply with the requirements for airplanes operated in foreign air commerce with respect to that portion of the airplanes operated by that person shown, under an FAA approved method of apportionment, to be engaged in foreign air commerce in the United States.

F. Replacement airplanes

Under this amendment, § 91.305(c), governing replacement airplanes, is redesignated and revised under new § 91.306. Specific, additional statutory requirements are implemented for replacement of two-engine and three-engine airplanes in accordance with the ASNA Act. The contract must be executed before January 1, 1983, and specify delivery of a Stage 3 airplane before January 1, 1985, for replacing three-engine airplanes and before January 1, 1986 for replacing two-engine airplanes. This amendment incorporates those requirements and dates while preserving the existing rule for other airplanes covered by Subpart E.

Under the existing rule, the effect of which is unchanged for other than certain two-engine and three-engine airplanes, § 91.305(c) permits continued operation of a noncomplying ("Stage 1") airplane after the applicable phase compliance date, if it will be replaced before the final compliance date. To continue to be operated, the airplane must be covered by an FAA approved replacement plan (before the phased compliance date) with a scheduled delivery (before January 1, 1985) of an eligible replacement airplane. To be eligible, that airplane must have been shown to comply either (1) with Stage 2 or Stage 3 noise levels before issuance of an original standard airworthiness certificate or (2) with Stage 3 noise levels before issuance of a standard airworthiness certificate other than original issue (for airplanes that have

been reengined or otherwise modified). The existing provisions are rewritten to apply only to airplanes not covered by the ASNA Act "new technology aircraft incentive" (§ 303) and to clarify that the replacement airplane "ordered and * * * scheduled for delivery" must be under a "binding contract," not merely an option to buy, as discussed below. In all cases, operation of the airplane to be replaced may continue until the dates specified in the rule but, as prescribed in the rule, not beyond the date specified in the approved plan. Accordingly, the ASNA Act does not address any replacement of airplanes subject to the existing January 1, 1981, compliance date. To operate those airplanes to be replaced after that date still requires FAA approved replacement plans and binding contracts for replacement airplanes *before* the applicable 1981 phased compliance dates.

In order to determine whether acceptable contractual obligations supporting a replacement plan have been executed by the operator of the Stage 1 airplanes, the amendment provides for the submission of a certified application for approval of the replacement plan. Paragraph 91.306(d) applies to each replacement plan, including any revised plan, submitted for approval to the FAA. It requires operators of the airplanes to be replaced to submit to the FAA, Director of the Office of Environment and Energy, an application containing specified information constituting the plan, and certified as true and correct (under penalty of 18 U.S.C. 1001), upon which the FAA may rely in considering whether to approve the replacement plan. More than one airplane may be the subject of a single replacement plan. On the basis of the application and replacement plan, the FAA should be able to determine whether a mutually binding contract between the operator and an aircraft manufacturer, or other source, for actual and timely delivery of an eligible replacement airplane has been entered into as contemplated under § 303 of the ASNA Act and new FAR § 91.306.

The information required to be included in the application should simplify the process of applying for and considering approvals. It should avoid, in most cases, the need for submitting the actual contracts and complex financing documents for review before a replacement plan can be approved. It should provide the requisite assurances that replacement of the airplanes covered will in fact occur and an eligible replacement airplane will be put into service as contemplated. In that regard, an approved replacement plan will permit the continued operation of the Stage 1 airplane only until the date specified in the plan or its expiration under the rule and only so long as the material facts and representations made by the operator and relied upon in giving an approval continue to apply. The FAA contemplates that commercially sound transactions must be presented in order to obtain approval of each replacement plan. To ensure that the FAA has adequate information to make that determination, the amendment includes authority to request from the applicant any additional information or documentation when needed.

G. Service to small communities exemption.

The statute provides for issuance of limited exemptions to permit Stage 1 airplanes powered by two engines to be operated after otherwise applicable interim and final compliance dates (§ 304 of the ASNA Act). That provision is implemented under a new § 91.307. Under that section, the Administrator issues to operators exemptions covering specific two-engine airplanes operating in air commerce in the United States. Paragraph (a) of the new section provides the statutory dates for termination of the exemption; that is, January 1, 1985, for airplanes with more than 100 passenger seats and January 1, 1988, for airplanes with 100 passenger seats or less. Also, as specified in the ASNA Act, if an airplane covered by an exemption is sold, or otherwise disposed of, to another person on or after January 1, 1983, the exemption terminates on the date of delivery to that person. Because exemptions are issued to operators, are nontransferable, and cover specified airplanes, operation of an exempted airplane by another person will require the new operator to show any required compliance, or, if eligible, obtain an exemption covering its operation of that airplane, before operating it. Paragraph (b) contains the statutory provision indicating that the airplane's seating capacity, which dictates the maximum duration of the exemption, is governed by that shown to exist on December 1, 1979, or an earlier date established for that airplane by the Administrator.

H. Compliance plans and status.

Amendments to § 91.308 do not include any extension of the requirements for submitting compliance plans and status reports to foreign operators. However, several changes in the rule, primarily affecting U.S. operators engaged in both domestic and foreign air commerce, are adopted to reflect more clearly the changes in the operating noise limit requirements. Paragraph (a) is amended to cover airplanes under foreign registry that are operated by U.S. operators in the United States. Editorial changes are made in paragraphs (b)(2) and (3) to reflect the Amendments to other sections. Paragraph (c)(3) is amended so affected U.S. operators can break down the total number of airplanes engaged in domestic U.S. air commerce and in foreign air commerce in the United States, as well as the total number of airplanes in each of those classes that are powered by—(1) four turbojet engines with no bypass ratio or with a bypass ratio less than two; and (2) any other bypass ratio engines or number of engines. U.S. operators can also report the number of two-engine airplanes in each class operated under a service to small communities exemption. Under this amendment, current paragraph (c)(4)(x) is amended to govern only retirements of DC-8 and B-707 airplanes operated in domestic U.S. air commerce and a new paragraph (c)(4)(xi) covers those airplanes operated in foreign air commerce in the United States. Several paragraphs are redesignated and a new paragraph (c)(4)(xiv) is added to cover each airplane operated under an exemption issued to the operator, including those operated under a service to small communities exemption. Corresponding reporting codes are amended or added to paragraph (c)(5) to reflect those Amendments to the compliance plan and status reporting requirements affected by the ASNA Act. Compliance plans and status reports providing the information in the changed rule will not be required until the operator submits a new or revised plan and report after the effective date of this Amendment.

Effective and Compliance Dates

In light of the objectives and effects of this amendment, it is being made effective upon publication in the Federal Register. The amendments of §§ 91.303—91.308 include specific relief from the current requirements of Subpart E for domestic operations. Since some of those operators must meet the first phased compliance on January 1, 1981, those amendments should become effective as soon as possible to provide the relief contemplated under the ASNA Act. For foreign operators brought under Part 91 Subpart E by this action, the amendment requires compliance by January 1, 1985, 1986, or 1988 (depending on the airplane affected), regardless of when the amendment becomes effective. This, it provides compliance dates that exceed the required 30-day prior notice of regulatory requirements. Accordingly,

I find that good cause exists for making this amendment to Subpart E of Part 91 effective upon its publication in the Federal Register.

Adoption of the Amendment

Accordingly, Subpart E of Part 91 of the Federal Aviation Regulations (14 CFR Part 91) is amended, effective November 28, 1980, as follows:

PART 91—GENERAL OPERATING AND FLIGHT RULES

* * * * *

Subpart E—Operating Noise Limits

1. By amending § 91.301 as follows:

a. By revoking paragraph (c) and marking it "[Reserved]."

b. By redesignating paragraph (a)(2) as paragraph (a)(3) and by adding a new paragraph (a)(2) and amending paragraphs (a)(1) and (b) to read as follows:

§ 91.301 Applicability; relation to Part 36.

(a) * * *

(1) Sections 91.303, 91.305, 91.306, and 91.307 apply to civil subsonic turbojet airplanes with maximum weights of more than 75,000 pounds and—

(i) If U.S. registered, that have standard airworthiness certificates; or

(ii) If foreign registered, that would be required by this chapter to have a U.S. standard airworthiness certificate in order to conduct the operations intended for the airplane were it registered in the United States.

Those sections apply to operations to or from airports in the United States under this part and Parts 121, 123, 129, and 135 of this chapter.

(2) Section 91.306 applies to U.S. operators of civil subsonic turbojet airplanes covered by this subpart. That section applies to operators operating to or from airports in the United States under this part and Parts 121, 123, and 135 but not to those operating under Part 129 of this chapter.

* * * * *

(b) Unless otherwise specified, as used in this subpart "Part 36" refers to 14 CFR Part 36, including the noise levels under Appendix C of that part, notwithstanding the provisions of that part excepting certain airplanes from the specified noise requirements. For purposes of this subpart, the various stages of noise levels, the terms used to describe airplanes with respect to those levels, and the terms "subsonic airplane" and "supersonic airplane" have the meanings specified under Part 36 of this chapter. For purposes of this subpart, for subsonic airplanes operated in foreign air commerce in the United States, the Administrator may accept compliance with the noise requirements under Annex 16 of the International Civil Aviation Organization when those requirements have been shown to be substantially compatible with, and achieve results equivalent to those achievable under, Part 36 for that airplane. Determinations made under these provisions are subject to the limitations of § 36.5 of this chapter as if those noise levels were Part 36 noise levels.

2. By revising § 91.303 to read as follows:

§ 91.303 Final compliance: Subsonic airplanes.

Except as provided in §§ 91.306 and 91.307, on and after January 1, 1985, no person may operate to or from an airport in the United States any subsonic airplane covered by this subpart, unless that airplane has been shown to comply with Stage 2 or Stage 3 noise levels under Part 36 of this chapter.

3. By revising § 91.305 to read as follows:

§ 91.305 Phased compliance under Parts 121, and 135: Subsonic airplanes.

(a) *General.* Each person operating airplanes under Parts 121 or 135 of this chapter, regardless of the State of registry of the airplane, shall comply with this section with respect to subsonic airplanes covered by this subpart.

(b) *Compliance schedule.* Except for airplanes shown to be operated in foreign air commerce under paragraph (c) of this section or covered by an exemption (including those issued under § 91.307), airplanes operated by U.S. operators in air commerce in the United States must be shown to comply with Stage 2 or Stage 3 noise levels under Part 36, in accordance with the following schedule, or they may not be operated to or from airports in the United States:

(1) By January 1, 1981:

(i) At least one quarter of the airplanes that have four engines with no bypass ratio or with a bypass ratio less that two.

(ii) At least half of the airplanes powered by engines with any other bypass ratio or by another number of engines.

(2) By January 1, 1983:

(i) At least one half of the airplanes that have four engines with no bypass ratio or with a bypass ratio less than two.

(ii) All airplanes powered by engines with any other bypass ratio or by another number of engines.

(c) *Apportionment of airplanes.* For purposes of paragraph (b) of this section, a person operating airplanes engaged in domestic and foreign air commerce in the United States may elect not to comply with the phased schedule with respect to that portion of the airplanes operated by that person shown, under an approved method of apportionment, to be engaged in foreign air commerce in the United States.

4. By adding a new § 91.306 to read as follows:

§ 91.306 Replacement airplanes.

A Stage 1 airplane may be operated after the otherwise applicable compliance dates prescribed under §§ 91.303 and 91.305 if, under an approved plan, a replacement airplane has been ordered by the operator under a binding contract as follows:

(a) For replacement of an airplane powered by two engines, until January 1, 1986, but not after the date specified in the plan, if the contract is entered into by January 1, 1983, and specifies delivery before January 1, 1986, of a replacement airplane which has been shown to comply with Stage 3 noise levels under Part 36 of this chapter.

(b) For replacement of an airplane powered by three engines, until January 1, 1985, but not after the date specified in the plan, if the contract is entered into by January 1, 1983, and specifies delivery before January 1, 1985, of a replacement airplane which has been shown to comply with Stage 3 noise levels under Part 36 of this chapter.

(c) For replacement of any other airplane, until January 1, 1985, but not after the date specified in the plan, if the contract specifies delivery before January 1, 1985, of a replacement airplane which—

(1) Has been shown to comply with Stage 2 or Stage 3 noise levels under Part 36 of this chapter prior to issuance of an original standard airworthiness certificate; or

(2) Has been shown to comply with Stage 3 noise levels under Part 36 of this chapter prior to issuance of a standard airworthiness certificate other than original issue.

(d) Each operator of a Stage 1 airplane for which approval of a replacement plan is requested under this section shall submit to the FAA Director of the Office of Environment and Energy an application constituting the proposed replacement plan (or revised Plan) that contains the information specified under this paragraph and which is certified (under penalty of 18 U.S.C. 1001) as true and correct. Each application for approval must provide information corresponding to that specified in the contract, upon which the FAA may rely in considering its approval, as follows:

(1) Name and address of the applicant.

(2) Aircraft type and model and registration number for each airplane to be replaced under the plan.

(3) Aircraft type and model of each replacement airplane.

(4) Scheduled dates of delivery and introduction into service of each replacement airplane.

(5) Name and addresses of the parties to the contract and any other persons who may effectively cancel the contract or otherwise control the performance of any party.

(6) Information specifying the anticipated disposition of the airplanes to be replaced.

(7) A statement that the contract represents a legally enforceable, mutual agreement for delivery of an eligible replacement airplane.

(8) Any other information or documentation requested by the Director, Office of Environment and Energy reasonably necessary to determine whether the plan should be approved.

5. By revoking § 91.307 and substituting for it a new § 91.307 to read as follows:

§ 91.307 Service to small communities exemption: Two-engine, subsonic airplanes.

(a) A Stage 1 airplane powered by two engines may be operated after the compliance dates prescribed under §§ 91.303, 91.305, and 91.306, when, with respect to that airplane, the Administrator issues an exemption to the operator from the noise level requirements under this subpart. Each exemption issued under this section terminates on the earlier of the following dates—

(1) For an exempted airplane sold, or otherwise disposed of, to another person on or after January 1, 1983—on the date of delivery to that person;

(2) For an exempted airplane with a seating configuration of 100 passenger seats or less—on January 1, 1988; or

(3) For an exempted airplane with a seating configuration of more than 100 passenger seats—on January 1, 1985.

(b) For purposes of this section, the seating configuration of an airplane is governed by that shown to exist on December 1, 1979, or an earlier date established for that airplane by the Administrator.

6. By amending § 91.308 as follows:

a. By amending the section heading to read as follows:

§ 91.308 Compliance plans and status: U.S. operators of subsonic airplanes.

b. By amending paragraph (a) by deleting the words "Each operator of a civil subsonic airplane covered by this subpart" and substituting for them the words "Each U.S. operator of a civil subsonic airplane covered by this subpart (regardless of the State of registry)."

c. By amending paragraph (b)(2) by deleting the words "airplane types" and substituting for them the word "airplanes."

d. By amending paragraph (b)(3) after the words "applicable to that airplane" by deleting the word "type" and after the words "through 1985" by adding the words "or until any later compliance date for that airplane prescribed under this subpart,".

e. By amending paragraph (c)(3) to read as follows:

* * * * *

(c) * * *

(3) The total number of airplanes covered by this section and in each of the following classes and subclasses:

(i) Airplanes engaged in domestic air commerce.

(A) Airplanes powered by four turbojet engines with no bypass ratio or with a bypass ratio less than two.

(B) Airplanes powered by engines with any other bypass ratio or by another number of engines.

(C) Airplanes covered by an exemption issued under § 91.307 of this subpart.

(ii) Airplanes engaged in foreign air commerce under an approved apportionment plan.

(A) Airplanes powered by four turbojet engines with no bypass ratio or with a bypass ratio less than two.

(B) Airplanes powered by engines with any other bypass ratio or by another number of engines.

(C) Airplanes covered by an exemption issued under § 91.307 of this subpart.

* * * * *

f. By amending paragraph (c)(4)(x) after the words "For DC-8 and B-707 airplanes" by adding the words "operated in domestic U.S. air commerce."

g. By revoking paragraph (c)(4)(vii) and marking it "[Reserved]".

h. By amending paragraph (c)(4)(xii) by deleting the reference to "§ 91.307 of this subpart" and substituting for it the words "§ 91.305(c) of this subpart."

i. By redesignating paragraphs (c)(4)(xi), (xii), (xiii), and (xiv) as paragraphs "(c)(4)(xii)," "(c)(4)(xiii)," "(c)(4)(xv)," and "(c)(4)(xvi)," respectively, and adding two new paragraphs "(c)(4)(xi)," and "(c)(4)(xiv)" to read as follows:

* * * * *

(c) * * *

(4) * * *

(xi) For DC-8 and B-707 airplanes operated in foreign air commerce in the United States, which have been or will be retired from service in the United States without replacement between April 14, 1980, and January 1, 1985, the appropriate code prescribed under paragraph (c)(5) of this section followed by the actual or scheduled month and year of retirement of the airplane from service;

* * * * *

(xiv) For airplanes covered by an exemption issued to the operator granting relief from noise level requirements of this subpart, the appropriate code prescribed under paragraph (c)(5) of this section followed by the actual or scheduled month and year of expiration of the exemption and the appropriate code and applicable dates which indicate the compliance strategy planned or implemented for the airplane.

* * * * *

j. By amending paragraph (c)(5) by amending the description for code "RET" and by adding two new codes "RFC" and "EXD" after the code "RET" to read as follows:

RET—For DC-8 and B-707 airplanes operated in domestic U.S. air commerce and retired from service in the United States without replacement between January 24, 1977, and January 1, 1985.

RFC—For DC-8 and B-707 airplanes operated by U.S. operators in foreign air commerce in the United States and retired from service in the United States without replacement between April 14, 1980, and January 1, 1985.

EXD—For airplanes exempted from showing compliance with the noise level requirements of this subpart.

(Secs., 307, 313(a), 601(a), 603, and 611(b), Federal Aviation Act of 1958, as amended (49 U.S.C. 1348, 1354(a), 1421(a), 1423, and 1431(b)); sec. 6(c), Department of Transportation Act (49 U.S.C. 1655(c)); Title III, Aviation Safety and Noise Abatement Act of 1979 (Pub. L. 96-193; 94 Stat. 50); 49 CFR 1.47(m); Title I, National Environmental Policy Act of 1969 (42 U.S.C. 4321 et seq.); Executive Order 11514, March 5, 1970))

Note.—The FAA has determined that this document involves a regulation which is not significant under Executive Order 12044 as implemented by DOT Regulatory Policies and Procedures (44 FR 11034; February 26, 1979). A copy of the regulatory evaluation prepared for this action is contained in the regulatory docket. A copy of it may be obtained by contacting the person identified above under the caption "For Further Information Contact".

Issued in Washington, D.C., on November 17, 1980.

Langhorne Bond,

Administrator.

[FR Doc. 80-36523 Filed 11-26-80; 8:45 am]

BILLING CODE 4910-13-M

federal register

Friday
November 28, 1980

Part V

Environmental Protection Agency

Water Quality Criteria Documents; Availability

ENVIRONMENTAL PROTECTION AGENCY

[FRL 1623-3]

Water Quality Criteria Documents; Availability

AGENCY: Environmental Protection Agency.

ACTION: Notice of Water Quality Criteria Documents.

SUMMARY: EPA announces the availability and provides summaries of water quality criteria documents for 64 toxic pollutants or pollutant categories. These criteria are published pursuant to section 304(a)(1) of the Clean Water Act.

AVAILABILITY OF DOCUMENTS: Summaries of both aquatic-based and health-based criteria from the documents are published below. Copies of the complete documents for individual pollutants may be obtained from the National Technical Information Service (NTIS), 5285 Port Royal Road, Springfield, VA 22161, (703-487-4650). A list of the NTIS publication order numbers for all 64 criteria documents is published below. These documents are also available for public inspection and copying during normal business hours at: Public Information Reference Unit, U.S. Environmental Protection Agency, Room 2404 (rear), 401 M St., S.W., Washington, D.C. 20460. As provided in 40 CFR Part 2, a reasonable fee may be charged for copying services. Copies of these documents are also available for review in the EPA Regional Office libraries.

Copies of the documents are not available from the EPA office listed below. Requests sent to that office will be forwarded to NTIS or returned to the sender.

1. Acenaphthene, PB81-117269.
2. Acrolein, PB81-117277.
3. Acrylonitrile, PB81-117285.
4. Aldrin/Dieldrin, PB81-117301.
5. Antimony, PB81-117319.
6. Arsenic, PB81-117327.
7. Asbestos, PB81-117335.
8. Benzene, PB81-117293.
9. Benzidine, PB81-117343.
10. Beryllium, PB81-117350.
11. Cadmium, PB81-117368.
12. Carbon Tetrachloride, PB81-117376.
13. Chlordane, PB81-117384.
14. Chlorinated benzenes, PB81-117392.
15. Chlorinated ethanes, PB81-117400.
16. Chloroalkyl ethers, PB81-117418.
17. Chlorinated naphthalene, PB81-117426.
18. Chlorinated phenols, PB81-117434.
19. Chloroform, PB81-117442.
20. 2-chlorophenol, PB81-117459.
21. Chromium, PB81-117467.
22. Copper, PB81-117475.
23. Cyanides, PB81-117483.
24. DDT, PB81-117491.
25. Dichlorobenzenes, PB81-117509.
26. Dichlorobenzidine, PB81-117517.
27. Dichloroethylenes, PB81-117525.
28. 2,4-dichlorophenol, PB81-117533.
29. Dichloropropanes/propenes, PB81-117541.
30. 2,4-dimethylphenol, PB81-117558.
31. Dinitrotoluene, PB81-117566.
32. Diphenylhydrazine, PB81-117731.
33. Endosulfan, PB81-117574.
34. Endrin, PB81-117582.
35. Ethylbenzene, PB81-117590.
36. Fluoranthene, PB81-117608.
37. Haloethers, PB81-117616.
38. Halomethanes, PB81-117624.
39. Heptachlor, PB81-117632.
40. Hexachlorobutadiene, PB81-117640.
41. Hexachlorocyclohexane, PB81-117657.
42. Hexachlorocyclopentadiene, PB81-117665.
43. Isophorone, PB81-117673.
44. Lead, PB81-117681.
45. Mercury, PB81-117699.
46. Naphthalene, PB81-117707.
47. Nickel, PB81-117715.
48. Nitrobenzene, PB81-117723.
49. Nitrophenols, PB81-117749.
50. Nitrosamines, PB81-117756.
51. Pentachlorophenol, PB81-117764.
52. Phenol, PB81-117772.
53. Phthalate esters, PB81-117780.
54. Polychlorinated biphenyls (PCBs), PB81-117798.
55. Polynuclear aromatic hydrocarbons, PB81-117806.
56. Selenium, PB81-117814.
57. Silver, PB81-117822.
58. Tetrachloroethylene, PB81-117830.
59. Thallium, PB81-117848.
60. Toluene, PB81-117855.
61. Toxaphene, PB81-117863.
62. Trichloroethylene, PB81-117871.
63. Vinyl chloride, PB81-117889.
64. Zinc, PB81-117897.

FOR FURTHER INFORMATION CONTACT: Dr. Frank Gostomski, Criteria and Standards Division (WH-585), United States Environmental Protection Agency, 401 M Street, S.W., Washington, D.C. 20460, (202) 245-3042.

SUPPLEMENTARY INFORMATION:

Background

Pursuant to section 304(a)(1) of the Clean Water Act, 33 U.S.C. 1314(a)(1), EPA is required to periodically review and publish criteria for water quality accurately reflecting the latest scientific knowledge:

(A) on the kind and extent of all identifiable effects on health and welfare including, but not limited to, plankton, fish, shellfish, wildlife, plant life, shorelines, beaches, esthetics, and recreation which may be expected from the presence of pollutants in any body of water, including groundwater, (B) on the concentration and dispersal of pollutants, or their byproducts, through biological, physical, and chemical processes, and (C) on the effects of pollutants on biological community diversity, productivity, and stability, including information on the factors affecting rates of eutrophication and rates of organic and inorganic sedimentation for varying types of receiving waters.

EPA is today announcing the availability of criteria documents for 64 of the 65 pollutants designated as toxic under section 307(a)(1) of the Act. The document on TCDD (Dioxin) will be published within the next month after review of recent studies. Criteria for the section 307(a)(1) toxic pollutants being published today will replace the criteria for those same pollutants found in the EPA publication, *Quality Criteria for Water*, (the "Red Book.") Criteria for all other pollutants and water constituents found in the "Red Book" remain valid. The criteria published today have been derived using revised methodologies for determining pollutant concentrations that will, when not exceeded, reasonably protect human health and aquatic life. Draft criteria documents were made available for public comment (44 FR 15926, March 15, 1979, 44 FR 43660, July 25, 1979, 44 FR 56628, October 1, 1979). These final criteria have been derived after consideration of all comments received.

These criteria documents are also issued in satisfaction of the Settlement Agreement in *Natural Resources Defense Council, et al.* v. *Train*, 8 E.R.C. 2120 (1976), modified, 12 E.R.C. 1833 (D.D.C. 1979). Pursuant to paragraph 11 of that agreement, EPA is required to publish criteria documents for the 65 pollutants which Congress, in the 1977 amendments to the Act, designated as toxic under section 307(a)(1). These documents contain recommended maximum permissible pollutant concentrations consistent with the protection of aquatic organisms, human health, and some recreational activities. Although paragraph 11 imposes certain obligations on the Agency, it does not create additional authority.

The Development of Water Quality Criteria

Section 304(a)(1) criteria contain two essential types of information: (1) discussions of available scientific data on the effects of pollutants on public health and welfare, aquatic life and recreation, and (2) quantitative concentrations or qualitative assessments of the pollutants in water which will generally ensure water

quality adequate to support a specified water use. Under section 304(a)(1), these criteria are based solely on data and scientific judgments on the relationship between pollutant concentrations and environmental and human health effects. Criteria values do not reflect considerations of economic or technological feasibility.

Publication of water quality criteria of this type has been an ongoing process which EPA, and its predecessor Agency, the Federal Water Pollution Control Administration, have been engaged in since 1968. At that time the first Federal compilation of water quality criteria, the so-called "Green Book" *(Water Quality Criteria)*, was published. As now, these criteria contained both narrative discussions of the environmental effects of pollutants on a range of possible uses and concentrations of pollutants necessary to support these uses. Since that time, water quality criteria have been revised and expanded with publication of the "Blue Book" *(Water Quality Criteria 1972)* in 1973 and the "Red Book" *(Quality Criteria for Water)* in 1976.

Since publication of the Red Book there have been substantial changes in EPA's approach to assessing scientific data and deriving section 304(a)(1) criteria. Previous criteria were derived from a limited data base. For many pollutants, an aquatic life criterion was derived by multiplying the lowest concentration known to have acute lethal effect on half of a test group of an aquatic species (the LC50 value) by an application factor in order to protect against chronic effects. If data showed a substance to be bioaccumulative or to have other significant long-term effects, a factor was used to reduce the indicated concentrations to a level presumed to be protective. Criteria for the protection of human health were similarly derived by considering the pollutants' acute, chronic, and bioaccumulative effects on non-human mammals and humans.

Although a continuation of the process of criteria development, the criteria published today were derived using revised methodologies (Guidelines) for calculating the impact of pollutants on human health and aquatic organisms. These Guidelines consist of systematic methods for assessing valid and appropriate data concerning acute and chronic adverse effects of pollutants on aquatic organisms, non-human mammals, and humans. By use of these data in prescribed ways, criteria are formulated to protect aquatic life and human health from exposure to the pollutants. For some pollutants, bioconcentration properties are used to formulate criteria protective of aquatic life uses. For almost all of the pollutants, bioconcentration properties are used to assess the relative extent of human exposure to the pollutant either directly through ingestion of water or indirectly through consumption of aquatic organisms. Human health criteria for carcinogens are presented as incremental risks to man associated with specific concentrations of the pollutant in ambient water. The Guidelines used to derive criteria protective of aquatic life and human health are fully described in appendices B and C, respectively, of this Notice.

The Agency believes that these Guidelines provide criteria which more accurately reflect the effects of these pollutants on human health and on aquatic organisms and their uses. They are based on a more rational and consistent approach for using scientific data. These Guidelines were developed by EPA scientists in consultation with scientists from outside the Agency and they have been subjected to intensive public comment.

Neither the Guidelines nor the criteria are considered inflexible doctrine. Even at this time, EPA is taking action to employ the resources of peer review groups, including the Science Advisory Board, to evaluate recently published data, and EPA is conducting its own evaluation of new data to determine whether revisions to the criteria documents would be warranted.

The criteria published today are based solely on the effect of a single pollutant. However, pollutants in combination may have different effects because of synergistic, additive, or antagonistic properties. It is impossible in these documents to quantify the combined effects of these pollutants, and persons using criteria should be aware that site-specific analysis of actual combinations of pollutants may be necessary to give more precise indications of the actual environmental impacts of a discharge.

Relationship of the Section 304(a)(1) Criteria to Regulatory Programs

Section 304(a)(1) criteria are not rules and they have no regulatory inpact. Rather, these criteria present scientific data and guidance on the enviromental effect of pollutants which can be useful to derive regulatory requirements based on considerations of water quality impacts. Under the Clean Water Act, these regulatory requirements may include the promulgation of water quality-based effluent limitations under section 302, water quality standards under section 303, or toxic pollutant effluent standards under section 307. States are encouraged to begin to modify or, if necessary, develop new programs necessary to support the implementation of regulatory controls for toxic pollutants. As appropriate, States may incorporate criteria for toxic pollutants, based on this guidance, into their water quality standards.

Section 304(a)(1) criteria have been most closely associated with the development of State water quality standards, and the "Red Book" values have, in the past, been the basis for EPA's assessments of the adequacy of State requirements. However, EPA is now completing a major review of its water quality standards policies and regulations. After consideration of comments received on an Advance Notice of Proposed Rulemaking (43 FR 29588, July 10, 1978) and the draft criteria documents, the Agency intends to propose, by the end of this year, a revised water quality standards regulation which will clarify the Agency's position on a number of significant standards issues.

With the publication of these criteria, however, it is appropriate to discuss EPA's current thinking on standards issues relating to their use. This discussion does not establish new regulatory requirements and is intended as guidance on the possible uses of these criteria and an indication of future rulemaking the Agency may undertake. No substantive requirements will be established without further opportunity for public comment.

Water Quality Standards

Section 303 of the Clean Water Act provides that water quality standards be developed for all surface waters. A water quality standard consists basically of two parts: (1) A "designated use" for which the water body is to be protected (such as "agricultural," "recreation" or "fish and wildlife"), and (2) "criteria" which are numerical pollutant concentration limits or narrative statements necessary to preserve or achieve the designated use. A water quality standard is developed through State or Federal rulemaking proceedings and must be translated into enforceable effluent limitations in a point source (NPDES) permit or may form the basis of best management practices applicable to nonpoint sources under section 208 of the Act.

Relationship of Section 304(a)(1) Criteria to the Criteria Component of State Water Quality Standards:

In the ANPRM, EPA announced a policy of "presumptive applicability" for

section 304(a)(1) criteria codified in the "Red Book." Presumptive applicability meant that a State had to adopt a criterion for a particular water quality parameter at least as stringent as the recommendation in the Red Book unless the State was able to justify a less stringent criterion based on: natural background conditions, more recent scientific evidence, or local, site-specific information. EPA is rescinding the policy of presumptive applicability because it has proven to be too inflexible in actual practice.

Although the section 304(a)(1) criteria represent a reasonable estimate of pollutant concentrations consistent with the maintenance of designated water uses, States may appropriately modify these values to reflect local conditions. In certain circumstances, the criteria may not accurately reflect the toxicity of a pollutant because of the effect of local water quality characteristics or varying sensitivities of local populations. For example, in some cases, ecosystem adaptation may enable a viable, balanced aquatic population to exist in waters with high natural background levels of certain pollutants. Similarly, certain compounds may be more or less toxic in some waters because of differences in alkalinity, temperature, hardness, and other factors.

Methods for adjusting the section 304(a)(1) criteria to reflect these local differences are discussed below.

Relationship of Section 304(a)(1) Criteria to Designated Water Uses:

The criteria published today can be used to support the designated uses which are generally found in State standards. The following section discusses the relationship between the criteria and individual use classifications. Where a water body is designated for more than one use, criteria necessary to protect the most sensitive use should be applied.

1. *Recreation:* Recreational uses of water include such activities as swimming, wading, boating and fishing. Although insufficient data exist on the effects of toxic pollutants resulting from exposure through such primary contact as swimming, section 304(a)(1) criteria based on human health effects may be used to support this designated use where fishing is included in the State definition of "recreation." In this situation only the portion of the criterion based on fish consumption should be used.

2. *Protection and Propagation of Fish and Other Aquatic Life:* The section 304(a)(1) criteria based on toxicity to aquatic life may be used directly to support this designated use.

3. *Agricultural and Industrial Uses:* The section 304(a)(1) criteria were not specifically developed to reflect the impact of pollutants on agricultural and industrial uses. However, the criteria developed for human health and aquatic life are sufficiently stringent to protect these other uses. States may establish criteria specifically designed to protect these uses.

4. *Public Water Supply:* The drinking water exposure component of the human health effects criteria can apply directly to this use classification or may be appropriately modified depending upon whether the specific water supply system falls within the auspices of the Safe Drinking Water Act's (SDWA) regulatory control, and the type and level of treatment imposed upon the supply before delivery to the consumer. The SDWA controls the presence of toxic pollutants in finished ("end-of-tap") drinking water. A brief description of relevant sections of this Act is necessary to explain how the SDWA will work in conjunction with section 304(a)(1) criteria in protecting human health from the effects of toxics due to consumption of water.

Pursuant to section 1412 of the SDWA, EPA has promulgated "National Interim Primary Drinking Water Standards" for certain organic and inorganic substances. These standards establish "maximum contaminant levels" ("MCLs") which specify the maximum permissible level of a contaminant in water which may be delivered to a user of a public water system now defined as serving a minimum of 25 people. MCLs are established based on consideration of a range of factors including not only the health effects of the contaminants but also technological and economic feasibility of the contaminants' removal from the supply. EPA is required to establish revised primary drinking water regulations based on the effects of a contaminant on human health, and include treatment capability, monitoring availability, and costs. Under Section 1401(1)(D)(i) of the SDWA, EPA is also allowed to establish the minimum quality criteria for water which may be taken into a public water supply system.

Section 304(a)(1) criteria provide estimates of pollutant concentrations protective of human health, but do not consider treatment technology, costs and other feasibility factors. The section 304(a)(1) criteria also include fish bioaccumulation and consumption factors in addition to direct human drinking water intake. These numbers were not developed to serve as "end of tap" drinking water standards, and they have no regulatory significance under the SDWA. Drinking water standards are established based on considerations, including technological and economic feasibility, not relevant to section 304(a)(1) criteria. Section 304(a)(1) criteria may be analogous to the recommended maximum contaminant levels (RMCLs) under section 1412(b)(1)(B) of the SDWA in which, based upon a report from the National Academy of Sciences, the Administrator should set target levels for contaminants in drinking water at which "no known or anticipated adverse effects occur and which allows an adequate margin of safety". RMCLs do not take treatment, cost, and other feasibility factors into consideration. Section 304(a)(1) criteria are, in concept, related to the health-based goals specified in the RMCLs. Specific mandates of the SDWA such as the consideration of multi-media exposure, as well as different methods for setting maximum contaminant levels under the two Acts, may result in differences between the two numbers.

MCLs of the SDWA, where they exist, control toxic chemicals in finished drinking water. However, because of variations in treatment and the fact that only a relatively small number of MCLs have been developed, ambient water criteria may be used by the States as a supplement to SDWA regulations. States will have the option of applying MCLs, section 304(a)(1) human health effects criteria, modified section 304(a)(1) criteria or controls more stringent than these three to protect against the effects of toxic pollutants by ingestion from drinking water.

For untreated drinking water supplies, States may control toxics in the ambient water through either use of MCLs (if they exist for the pollutants of concern), section 304(a)(1) human health effects criteria, or a more strigent contaminant level than the former two options.

For treated drinking water supplies serving less than 25 people, States may choose toxics control through application of MCLs (if they exist for the pollutants of concern and are attainable by the type of treatment) in the finished drinking water. States also have the options to control toxics in the ambient water by choosing section 304(a)(1,) criteria, adjusted section 304(a)(1) criteria resulting from the reduction of the direct drinking water exposure component in the criteria calculation to the extent that the treatment procedure reduces the level of pollutants, or a more stringent contaminant level than the former three options.

For treated drinking water supplies serving 25 people or greater, States *must* control toxics down to levels at least as stringent as MCLs (where they exist for

the pollutants of concern) in the finished drinking water. However, States also have the options to control toxics in the ambient water by choosing section 304(a)(1) criteria, adjusted section 304(a)(1) criteria resulting from the reduction of the direct drinking water exposure component in the criteria calculation to the extent that the treatment process reduces the level of pollutants, or a more stringent contaminant level than the former three options.

Inclusion of Specific Pollutants in State Standards:

To date, EPA has not required that a State address any specific pollutant in its standards. Although all States have established standards for most conventional pollutants, the treatment of toxic pollutants has been much less extensive. In the ANPRM, EPA suggested a policy under which States would be required to address a set of pollutants and incorporate specific toxic pollutant criteria into water quality standards. If the State failed to incorporate these criteria, EPA would promulgate the standards based upon these criteria pursuant to section 303(c)(4)(B).

In the forthcoming proposed revision to the water quality standard regulations, a significant change in policy will be proposed relating to the incorporation of certain pollutants in State water quality standards. This proposal will differ from the proposal made in the ANPRM. The ANPRM proposed an EPA-published list of pollutants for which States would have had to develop water quality standards. This list might have contained some (or all) of the 65 toxic pollutants. However, the revised water quality standards regulation will propose a process by which EPA will assist States in identifying specific toxic pollutants required for assessment for possible inclusion in State water quality standards. For these pollutants, States will have the option of adopting the published criteria or of adjusting those criteria based on site-specific analysis.

These pollutants would generally represent the greatest threat to sustaining a healthy, balanced ecosystem in water bodies or to human health due to exposure directly or indirectly from water. EPA is currently developing a process to determine which pollutants a State must assess for possible inclusion in its water quality standards. Relevant factors might include the toxicity of the pollutant, the frequency and concentration of its discharge, its geographical distribution, the breadth of data underlying the scientific assessment of its aquatic life and human health effects, and the technological and economic capacity to control the discharge of the pollutant. For some of the pollutants, all States may be required to assess them for possible inclusion in their standards. For others, assessment would be restricted to States or limited to specific water bodies where the pollutants pose a particular site-specific problem.

Criteria Modification Process

Flexibility is available in the application of these and any other valid water quality criteria to regulatory programs. Although in some cases they may be used by the States as developed, the criteria may be modified to refect local environmental conditions and human exposure patterns before incorporation into programs such as water quality standards. If significant impacts of site-specific water quality conditions in the toxicities of pollutants can be demonstrated or significantly different exposure patterns of these pollutants to humans can be shown, section 304(a)(1) criteria may be modified to reflect these local conditions. The term "local" may refer to any appropriate geographic area where common aquatic environmental conditions or exposure patterns exist. Thus, "local" may signify a Statewide, regional, river reach, or entire river basin area. On the other hand, the criteria of some pollutants might be applicable nationwide without the need for adaptation to reflect local conditions. The degree of toxicity toward aquatic organisms and humans characteristic of these pollutants would not change significantly due to local water quality conditions.

EPA is examining a series of environmental factors or water quality parameters which might realistically be expected to affect the laboratory-derived water quality criterion recommendation for a specific pollutant. Factors such as hardness, pH, suspended solids, types of aquatic organisms present, etc. could impact on the chemical's effect in the aquatic environment. Therefore, local information can be assembled and analyzed to adjust the criterion recommendation if necessary.

The Guidelines for deriving criteria for the protection of aquatic life suggest several approaches for modifying the criteria. First, toxicity data, both acute and chronic, for local species could be substituted for some or all of the species used in deriving criteria for the water quality standard. The minimum data requirements should still be fulfilled in calculating a revised criterion. Second, criteria may be specifically tailored to a local water body by use of data from toxicity tests performed with that ambient water. A procedure such as this would account for local environmental conditions in formulating a criterion relevant to the local water body. Third, site-specific water quality characteristics resulting in either enhancement or mitigation of aquatic life toxicity for the pollutant could be factored into final formulation of the criterion. Finally, the criteria may be made more stringent to ensure protection of an individual species not otherwise adequately protected by any of the three modification procedures previously mentioned.

EPA does not intend to have States assess every local stream segment and lake in the country on an individual basis before determining if an adjustment is necessary. Rather, it is envisioned that water bodies having similar hydrological, chemical, physical, and biological properties will be grouped for the purpose of criteria adjustment. The purpose of this effort is to assist States in adapting the section 304(a) criteria to local conditions where needed, thereby precluding the setting of arbitrary and perhaps unnecessarily stringent or underprotective criteria in a water body. In all cases, EPA will still be required, pursuant to section 303(c), to determine whether the State water quality standards are consistent with the goals of the Act, including a determination of whether State-established criteria are adequate to support a designated use.

Criteria for the Protection of Aquatic Life

Interpretation of the Criteria

The aquatic life criteria issued today are summarized in Appendix A of this Federal Register notice. Criteria have been formulated by applying a set of Guidelines to a data base for each pollutant. The criteria for the protection of aquatic life specify pollutant concentrations which, if not exceeded, should protect most, but not necessarily all, aquatic life and its uses. The Guidelines specify that criteria should be based on an array of data from organisms, both plant and animal, occupying various trophic levels. Based on these data, criteria can be derived which should be adequate to protect the types of organisms necessary to support an aquatic community.

The Guidelines are not designed to derive criteria which will protect all life stages of all species under all conditions. Generally some life stage of one or more tested species, and

probably some untested species, will have sensitivities below the maximum value or the 24-hour average under some conditions and would be adversely affected if the highest allowable pollutant concentrations and the worst conditions existed for a long time. In actual practice, such a situation is not likely to occur and thus the aquatic community as a whole will normally be protected if the criteria are not exceeded. In any aquatic community there is a wide range of individual species sensitivities to the effects of toxic pollutants. A criterion adequate to protect the most susceptible life stage of the most sensitive species would in many cases be more stringent than necessary to protect the overall aquatic community.

The aquatic life criteria specify both maximum and 24-hour average values. The combination of the two values is designed to provide adequate protection of aquatic life and its uses from acute and chronic toxicity and bioconcentration without being as restrictive as a one-number criterion would have to be to provide the same amount of protection. A time period of 24 hours was chosen in order to ensure that concentrations not reach harmful levels for unacceptably long periods. Averaging for longer periods, such as a week or a month for example, could permit high concentrations to persist long enough to produce significant adverse effects. A 24-hour period was chosen instead of a slightly longer or shorter period in recognition of daily fluctuations in waste discharges and of the influence of daily cycles of sunlight and darkness and temperature on both pollutants and aquatic organisms.

The maximum value, which is derived from acute toxicity data, prevents significant risk of adverse impact to organisms exposed to concentrations above the 24-hour average. Merely specifying the average value over a specified time period is insufficient because concentrations of chemicals higher than the average value can kill or cause irreparable damage in short periods. Furthermore, for some chemicals the effect of intermittent high exposures is cumulative. It is therefore necessary to place an upper limit on pollutant concentrations to which aquatic organisms might be exposed. The two-number criterion is intended to describe the highest average ambient water concentration which will produce a water quality generally suited to the maintenance of aquatic life while restricting the extent and duration of the excursions over that average to levels which will not cause harm. The only way to assure the same degree of protection with a one-number criterion would be to use the 24-hour average as a concentration that is not to be exceeded at any time in any place.

Since some substances may be more toxic in freshwater than in saltwater, or vice versa, provision is made for deriving separate water quality criteria for freshwater and for saltwater for each substance. However, for some substances sufficient data may not be available to derive one or both of these criteria using the Guidelines.

Specific aquatic life criteria have not been developed for all of the 65 toxic pollutants. In those cases where there were insufficient data to allow the derivation of a criterion, narrative descriptions of apparent threshold levels for acute and/or chronic effects based on the available data are presented. These descriptions are intended to convey a sense of the degree of toxicity of the pollutant in the absence of a criterion recommendation.

Summary of the Aquatic Life Guidelines

The Guidelines for Deriving Water Quality Criteria for the Protection of Aquatic Life and its Uses were developed to describe an objective, internally consistent, and appropriate way of ensuring that water quality criteria for aquatic life would provide, on the average, a reasonable amount of protection without an unreasonable amount of overprotection or underprotection. The resulting criteria are not intended to provide 100 percent protection of all species and all uses of aquatic life all of the time, but they are intended to protect most species in a balanced, healthy aquatic community. The Guidelines are published as Appendix B of this Notice. Responses to public comments on these Guidelines are attached as Appendix D.

Minimum data requirements are identified in four areas: acute toxicity to animals (eight data points), chronic toxicity to animals (three data points), toxicity to plants, and residues. Guidance is also given for discarding poor quality data.

Data on acute toxicity are needed for a variety of fish and invertebrate species and are used to derive a Final Acute Value. By taking into account the number and relative sensitivities of the tested species, the Final Acute Value is designed to protect most, but not necessarily all, of the tested and untested species.

Data on chronic toxicity to animals can be used to derive a Final Chronic Value by two different means. If chronic values are available for a specified number and array of species, a final chronic value can be calculated directly. If not, an acute-chronic ratio is derived and then used with the Final Acute Value to obtain the Final Chronic Value.

The Final Plant Value is obtained by selecting the lowest plant toxicity value based on measured concentrations.

The Final Residue Value is intended to protect wildlife which consume aquatic organisms and the marketability of aquatic organisms. Protection of the marketability of aquatic organisms is, in actuality, protection of a use of that water body ("commercial fishery"). Two kinds of data are necessary to calculate the Final Residue Value: a bioconcentration factor (BCF) and a maximum permissible tissue concentration, which can be an FDA action level or can be the result of a chronic wildlife feeding study. For lipid soluble pollutants, the BCF is normalized for percent lipids and then the Final Residue Value is calculated by dividing the maximum permissible tissue concentration by the normalized BCF and by an appropriate percent lipid value. BCFs are normalized for percent lipids since the BCF measured for any individual aquatic species is generally proportional to the percent lipids in that species.

If sufficient data are available to demonstrate that one or more of the final values should be related to a water quality characteristic, such as salinity, hardness, or suspended solids, the final value(s) are expressed as a function of that characteristic.

After the four final values (Final Acute Value, Final Chronic Value, Final Plant Value, and Final Residue Value) have been obtained, the criterion is established with the Final Acute Value becoming the maximum value and the lowest of the other three values becoming the 24-hour average value. All of the data used to calculate the four final values and any additional pertinent information are then reviewed to determine if the criterion is reasonable. If sound scientific evidence indicates that the criterion should be raised or lowered, appropriate changes are made as necessary.

The present Guidelines have been revised from the earlier published versions (43 FR 21506, May 18, 1978; 43 FR 29028, July 5, 1978; 44 FR 15926, March 15, 1979). Details have been added in many places and the concept of a minimum data base has been incorporated. In addition, three adjustment factors and the species sensitivity factor have been deleted. These modifications were the result of the Agency's analysis of public comments and comments received from the Science Advisory Board on earlier

versions of the Guidelines. These comments and the Resultant modifications are addressed fully in Appendix D to this notice.

Criteria for the Protection of Human Health

Interpretation of the Human Health Criteria

The human health criteria issued today are summarized in Appendix A of this Federal Register notice. Criteria for the protection of human health are presented for 62 of the 65 pollutants based on their carcinogenic, toxic, or organoleptic (taste and odor) properties. The meanings and practical uses of the criteria values are distinctly different depending on the properties on which they are based.

The objective of the health assessment portions of the criteria documents is to estimate ambient water concentrations which, in the case of non-carcinogens, prevent adverse health effects in humans, and in the case of suspect or proven carcinogens, represent various levels of incremental cancer risk.

Health assessments typically contain discussions of four elements: Exposure, pharmacokinetics, toxic effects, and criterion formulation.

The exposure section summarizes information on exposure routes: ingestion directly from water, indirectly from consumption of aquatic organisms found in ambient water, other dietary sources, inhalation, and dermal contact. Exposure assumptions are used to derive human health criteria. Most criteria are based solely on exposure from consumption of water containing a specified concentration of a toxic pollutant and through consumption of aquatic organisms which are assumed to have bioconcentrated pollutants from the water in which they live. Other multimedia routes of exposure such as air, non-aquatic diet, or dermal are not factored into the criterion formulation for the vast majority of pollutants due to lack of data. The criteria are calculated using the combined aquatic exposure pathway and also using the aquatic organism ingestion exposure route alone. In criteria reflecting both the water consumption and aquatic organism ingestion routes of exposure, the relative exposure contribution varies with the propensity of a pollutant to bioconcentrate, with the consumption of aquatic organisms becoming more important as the bioconcentration factor (BCF) increases. As additional information on total exposure is assembled for pollutants for which criteria reflect only the two specified aquatic exposure routes, adjustments in water concentration values may be made. The Agency intends to publish guidance which will permit the States to identify significantly different exposure patterns for their populations. If warranted by the demonstration of significantly different exposure patterns, this will become an element of a process to adapt/modify human health-based criteria to local conditions, somewhat analogous to the aquatic life criteria modification process discussed previously. It is anticipated that States at their discretion will be able to set appropriate human health criteria based on this process.

The pharmacokinetics section reviews data on absorption, distribution, metabolism, and excretion to assess the biochemical fate of the compounds in the human and animal system. The toxic effects section reviews data on acute, subacute, and chronic toxicity, synergistic and antagonistic effects, and specific information on mutagenicity, teratogenicity, and carcinogenicity. From this review, the toxic effect to be protected against is identified taking into account the quality, quantity, and weight of evidence characteristic of the data. The criterion formulation section reviews the highlights of the text and specifies a rationale for criterion development and the mathematical derivation of the criterion number.

Within the limitations of time and resources, current published information of significance was incorporated into the human health assessments. Review articles and reports were used for data evaluation and synthesis. Scientific judgment was exercised in reviewing and evaluating the data in each criteria document and in identifying the adverse effects for which protective criteria were published.

Specific health-based criteria are developed only if a weight of evidence supports the occurrence of the toxic effect and if dose/response data exist from which criteria can be estimated.

Criteria for suspect or proven carcinogens are presented as concentrations in water associated with a range of incremental cancer risks to man. Criteria for non-carcinogens represent levels at which exposure to a single chemical is not anticipated to produce adverse effects in man. In a few cases, organoleptic (taste and odor) data form the basis for the criterion. While this type of criterion does not represent a value which directly affects human health, it is presented as an estimate of the level of a pollutant that will not produce unpleasant taste or odor either directly from water consumption or indirectly by consumption of aquatic organisms found in ambient waters. A criterion developed in this manner is judged to be as useful as other types of criteria in protecting designated water uses. In addition, where data are available, toxicity-based criteria are also presented for pollutants with derived organoleptic criteria. The choice of criteria used in water quality standards for these pollutants will depend upon the designated use to be protected. In the case of a multiple use water body, the criterion protecting the most sensitive use will be applied. Finally, for several pollutants no criteria are recommended due to a lack of information sufficient for quantitative criterion formulation.

Risk Extrapolation

Because methods do not now exist to establish the presence of a threshold for carcinogenic effects, EPA's policy is that there is no scientific basis for estimating "safe" levels for carcinogens. The criteria for carcinogens, therefore, state that the recommended concentration for maximum protection of human health is zero. In addition, the Agency has presented a range of concentrations corresponding to incremental cancer risks of 10^{-7} to 10^{-5} (one additional case of cancer in populations ranging from ten million to 100,000, respectively). Other concentrations representing different risk levels may be calculated by use of the Guidelines. The risk estimate range is presented for information purposes and does not represent an Agency judgment on an "acceptable" risk level.

Summary of the Human Health Guidelines

The health assessments and corresponding criteria published today were derived based on *Guidelines and Methodology Used in the Preparation of Health Effect Assessment Chapters of the Consent Decree Water Criteria Documents* (the Guidelines) developed by EPA's Office of Reserch and Development. The estimation of health risks associated with human exposure to environmental pollutants requires predicting the effect of low doses for up to a lifetime in duration. A combination of epidemiological and animal dose/response data is considered the preferred basis for quantitative criterion derivation. The complete Guidelines are presented as Appendix C. Major issues associated with these Guidelines and responses to public comments are presented as Appendix E.

No-effect (non-carcinogen) or specified risk (carcinogen) concentrations were estimated by extrapolation from animal toxicity or

human epidemiology studies using the following basic exposure assumptions: a 70-kilogram male person (*Report of the Task Group on Reference Man,* International Commission for Radiation Protection, November 23, 1957) as the exposed individual; the average daily consumption of freshwater and estuarine fish and shellfish products equal to 6.5 grams/day; and the average ingestion of two liters/day of water (*Drinking Water and Health,* National Academy of Sciences, National Research Council, 1977). Criteria based on these assumptions are estimated to be protective of an adult male who experiences average exposure conditions.

Two basic methods were used to formulate health criteria, depending on whether the prominent adverse effect was cancer or other toxic manifestations. The following sections detail these methods.

Carcinogens

Extrapolation of cancer responses from high to low doses and subsequent risk estimation from animal data is performed using a linearized multi-stage model. This procedure is flexible enough to fit all monotonically-increasing dose response data, since it incorporates several adjustable parameters. The multi-stage model is a linear non-threshold model as was the "one-hit" model originally used in the proposed criteria documents. The linearized multi-stage model and its characteristics are described fully in Appendix C. The linear non-threshold concept has been endorsed by the four agencies in the Interagency Regulatory Liaison Group and is less likely to underestimate risk at the low doses typical of environmental exposure than other models that could be used. Because of the uncertainties associated with dose response, animal-to-human extrapolation and other unknown factors, because of the use of average exposure assumptions, and because of the serious public health consequences that could result if risk were underestimated, EPA believes that it is prudent to use conservative methods to estimate risk in the water quality criteria program. The linearized multistage model is more systematic and invokes fewer arbitrary assumptions than the "one-hit" procedure previously used.

It should be noted that extrapolation models provide estimates of risk since a varitey of assumptions are built into any model. Models using widely different assumptions may produce estimates ranging over several orders of magnitude. Since there is at present no way to demonstrate the scientific validity of any model, the use of risk extrapolation models is a subject of debate in the scientific community. However, risk extrapolation is generally recognized as the only tool available at this time for estimating the magnitude of health hazards associated with non-threshold toxicants and has been endorsed by numerous Federal agencies and scientific organizations, including EPA's Carcinogen Assessment Group, the National Academy of Sciences, and the Interagency Regulatory Liaison Group as a useful means of assessing the risks of exposure to various carcinogenic pollutants.

Non-Carcinogens

Health criteria based on toxic effects of pollutants other than carcinogenicity are estimates of concentrations which are not expected to produce adverse effects in humans. They are based upon Acceptable Daily Intake (ADI) levels and are generally derived using no-observed-adverse-effect-level (NOAEL) data from animal studies although human data are used wherever available. The ADI is calculated using safety factors to account for uncertainties inherent in extrapolation from animal to man. In accordance with the National Research Council recommendations (*Drinking Water and Health,* National Academy of Sciences, National Research Council, 1977), safety factors of 10, 100, or 1,000 are used depending on the quality and quantity of data. In some instances extrapolations are made from inhalation studies or limits to approximate a human response from ingestion using the Stokinger-Woodward model (Journal of American Water Works Association, 1958). Calculations of criteria from ADIs are made using the standard exposure assumptions (2 liters of water, 6.5 grams of edible aquatic products, and an average body weight of 70 kg).

Dated: October 24, 1980.

Douglas M. Costle,

Administrator.

Appendix A—Summary of Water Quality Criteria

Acenaphthene

Freshwater Aquatic Life

The available data for acenaphthene indicate that acute toxicity to freshwater aquatic life occurs at concentrations as low as 1,700 μg/l and would occur at lower concentrations among species that are more sensitive than those tested. No data are available concerning the chronic toxicity of acenaphthene to sensitive freshwater aquatic animals but toxicity to freshwater algae occur at concentrations as low as 520 μg/l.

Saltwater Aquatic Life

The available data for acenaphthene indicate that acute and chronic toxicity to saltwater aquatic life occur at concentrations as low as 970 and 710 μg/l, respectively, and would occur at lower concentrations among species that are more sensitive than those tested. Toxicity to algae occurs at concentrations as low as 500 μg/l.

Human Health

Sufficient data is not available for acenaphthene to derive a level which would protect against the potential toxicity of this compound. Using available organoleptic data, for controlling undesirable taste and odor quality of ambient water, the estimated level is 20 μg/l. It should be recognized that organoleptic data as a basis for establishing a water quality criteria have limitations and have no demonstrated relationship to potential adverse human health effects.

Acrolein

Freshwater Aquatic Life

The available data for acrolein indicate that acute and chronic toxicity to freshwater aquatic life occurs at concentrations as low as 68 and 21 μg/l, respectively, and would occur at lower concentrations among species that are more sensitive than those tested.

Saltwater Aquatic Life

The available data for acrolein indicate that acute toxicity to saltwater aquatic life occurs at concentrations as low as 55 μg/l and would occur at lower concentrations among species that are more sensitive than those tested. No data are available concerning the chronic toxicity of acrolein to sensitive saltwater aquatic life.

Human Health

For the protection of human health from the toxic properties of acrolein ingested through water and contaminated aquatic organisms, the ambient water criterion is determined to be 320 μg/l.

For the protection of human health from the toxic properties of acrolein ingested through contaminated aquatic organisms alone, the ambient water criterion is determined to be 780 μg/l.

Acrylonitrile

Freshwater Aquatic Life

The available data for acrylonitrile indicate that acute toxicity to freshwater aquatic life occurs at concentrations as

low as 7,550 μg/l and would occur at lower concentrations among species that are more sensitive than those tested. No definitive data are available concerning the chronic toxicity of acrylonitrile to sensitive freshwater aquatic life but mortality occurs at concentrations as low as 2,600 μg/l with a fish species exposed for 30 days.

Saltwater Aquatic Life

Only one saltwater species has been tested with acrylonitrile and no statement can be made concerning acute or chronic toxicity.

Human Health

For the maximum protection of human health from the potential carcinogenic effects due to exposure of acrylonitrile through ingestion of contaminated water and contaminated aquatic organisms, the ambient water concentration should be zero based on the non-threshold assumption for this chemical. However, zero level may not be attainable at the present time. Therefore, the levels which may result in incremental increase of cancer risk over the lifetime are estimated at 10^{-5}, 10^{-6}, and 10^{-7}. The corresponding criteria are .58 μg/l, .058 μg/l and .006 μg/l, respectively. If the above estimates are made for consumption of aquatic organisms only, excluding consumption of water, the levels are 6.5 μg/l, .65 μg/l, and .065 μg/l, respectively. Other concentrations representing different risk levels may be calculated by use of the Guidelines. The risk estimate range is presented for information purposes and does not represent an Agency judgment on an "acceptable" risk level.

Aldrin-Dieldrin

Dieldrin

Freshwater Aquatic Life

For dieldrin the criterion to protect fresh water aquatic life as derived using the Guidelines is 0.0019 μg/l as a 24-hour average and the concentration should not exceed 2.5 μg/l at any time.

Saltwater Aquatic Life

For dieldrin the criterion to protect saltwater aquatic life as derived using the Guidelines is 0.0019 μg/l as a 24-hour average and the concentration should not exceed 0.71 μg/l at any time.

Human Health

For the maximum protection of human health from the potential carcinogenic effects due to exposure of dieldrin through ingestion of contaminated water and contaminated aquatic organisms, the ambient water concentration should be zero based on the non-threshold assumption for this chemical. However, zero level may not be attainable at the present time. Therefore, the levels which may result in incremental increase of cancer risk over the lifetime are estimated at 10^{-5}, 10^{-6}, and 10^{-7}. The corresponding criteria are .71 ng/l, .071 ng/l, and .0071 ng/l, respectively. If the above estimates are made for consumption of aquatic organisms only, excluding consumption of water, the levels are .76 ng/l, .076 ng/l, and .0076 ng/l respectively. Other concentrations representing different risk levels may be calculated by use of the Guidelines. The risk estimate range is presented for information purposes and does not represent an Agency judgment on an "acceptable" risk level.

Aldrin

Freshwater Aquatic Life

For freshwater aquatic life the concentration of aldrin should not exceed 3.0 μg/l at any time. No data are available concerning the chronic toxicity of aldrin to sensitive freshwater aquatic life.

Saltwater Aquatic Life

For saltwater aquatic life the concentration of aldrin should not exceed 1.3 μg/l at any time. No data are available concerning the chronic toxicity of aldrin to sensitive saltwater aquatic life.

Human Health

For the maximum protection of human health from the potential carcinogenic effects due to exposure of aldrin through ingestion of contaminated water and contaminated aquatic organisms, the ambient water concentration should be zero based on the non-threshold assumption for this chemical. However, zero level may not be attainable at the present time. Therefore, the levels which may result in incremental increase of cancer risk over the lifetime are estimated at 10^{-5}, 10^{-6}, and 10^{-7}. The corresponding criteria are .74 ng/1, .074 ng/1, and .0074 ng/1, respectively. If the above estimates are made for consumption of aquatic organisms only, excluding consumption of water, the levels are .79 ng/1, .079 ng/1, and .0079 ng/1, respectively. Other concentrations respresenting different risk levels may be calculated by use of the Guidelines. The risk estimate range is presented for information purposes and does not represent an Agency judgment on an "acceptable" risk level.

Antimony

Freshwater Aquatic Life

The available data for antimony indicate that acute and chronic toxicity to freshwater aquatic life occur at concentrations as low as 9,000 and 1,600 μg/l, respectively, and would occur at lower concentrations among species that are more sensitive than those tested. Toxicity to algae occurs at concentrations as low as 610 μg/l.

Saltwater Aquatic Life

No saltwater organisms have been adequately tested with antimony, and no statement can be made concerning acute or chronic toxicity.

Human Health

For the protection of human health from the toxic properties of antimony ingested through water and contaminated aquatic organisms, the ambient water criterion is determined to be 146 μg/l.

For the protection of human health from the toxic properties of antimony ingested through contaminated aquatic organisms alone, the ambient water criterion is determined to be 45,000 μg/l.

Arsenic

Freshwater Aquatic Life

For freshwater aquatic life the concentration of total recoverable trivalent inorganic arsenic should not exceed 440 μg/l at any time. Short-term effects on embryos and larvae of aquatic vertebrate species have been shown to occur at concentrations as low as 40 μg/l.

Saltwater Aquatic Life

The available data for total recoverable trivalent inorganic arsenic indicate that acute toxicity to saltwater aquatic life occurs at concentrations as low as 508 μg/l and would occur at lower concentrations among species that are more sensitive than those tested. No data are available concerning the chronic toxicity of trivalent inorganic arsenic to sensitive saltwater aquatic life.

Human Health

For the maximum protection of human health from the potential carcinogenic effects due to exposure of arsenic through ingestion of contaminated water and contaminated aquatic organisms, the ambient water concentration should be zero based on the non-threshold assumption for this chemical. However, zero level may not be attainable at the present time. Therefore, the levels which may result in incremental increase of cancer risk over the lifetime are

estimated at 10^{-5}, 10^{-6}, and 10^{-7}. The corresponding criteria are 22 ng/l, 2.2 ng/l, and .22 ng/l, respectively. If the above estimates are made for consumption of aquatic organisms only, excluding consumption of water, the levels are 175 ng/l, 17.5 ng/l, and 1.75 ng/l, respectively. Other concentrations representing different risk levels may be calculated by use of the Guidelines. The risk estimate range is presented for information purposes and does not represent an Agency judgment on an "acceptable" risk level.

Asbestos

Freshwater Aquatic Life

No freshwater organisms have been tested with any asbestiform mineral and no statement can be made concerning acute or chronic toxicity.

Saltwater Aquatic Life

No saltwater organisms have been tested with any asbestiform mineral and no statement can be made concerning acute or chronic toxicity.

Human Health

For the maximum protection of human health from the potential carcinogenic effects due to exposure of asbestos through ingestion of contaminated water and contaminated aquatic organisms, the ambient water concentration should be zero based on the non-threshold assumption for this chemical. However, zero level may not be attainable at the present time. Therefore, the levels which may result in incremental increase of cancer risk over the lifetime are estimated at 10^{-5}, 10^{-6}, and 10^{-7}. The corresponding criteria are 300,000 fibers/1,30,000 fibers/1, and 3,000 fibers/1, respectively. Other concentrations representing different risk levels may be calculated by use of the Guidelines. The risk estimate range is presented for information purposes and does not represent an Agency judgment on an "acceptable" risk level.

Benzene

Freshwater Aquatic Life

The available data for benzene indicate that acute toxicity to freshwater aquatic life occurs at concentrations as low as 5,300 μg/l and would occur at lower concentrations among species that are more sensitive than those tested. No data are available concerning the chronic toxicity of benzene to sensitive freshwater aquatic life.

Saltwater Aquatic Life

The available data for benzene indicate that acute toxicity to saltwater aquatic life occurs at concentrations as low as 5,100 μg/l and would occur at lower concentrations among species that are more sensitive than those tested. No definitive data are available concerning the chronic toxicity of benzene to sensitive saltwater aquatic life, but adverse effects occur at concentrations as low as 700 μg/l with a fish species exposed for 168 days.

Human Health

For the maximum protection of human health from the potential carcinogenic effects due to exposure of benzene through ingestion of contaminated water and contaminated aquatic organisms, the ambient water concentration should be zero based on the non-threshold assumption for this chemical. However, zero level may not be attainable at the present time. Therefore, the levels which may result in incremental increase of cancer risk over the lifetime are estimated at 10^{-5}, 10^{-6}, and 10^{-7}. The corresponding criteria are 6.6 μg/l, .66 μg/l, and .066 μg/l, respectively. If the above estimates are made for consumption of aquatic organisms only, excluding consumption of water, the levels are 400 μg/l, 40.0 μg/l, and 4.0 μg/l, respectively. Other concentrations representing different risk levels may be calculated by use of the Guidelines. The risk estimate range is presented for information purposes and does not represent an Agency judgment on an "acceptable" risk level.

Benzidine

Freshwater Aquatic Life

The available data for benzidine indicate that acute toxicity to freshwater aquatic life occurs at concentrations as low as 2,500 μg/l and would occur at lower concentrations among species that are more sensitive than those tested. No data are available concerning the chronic toxicity of benzidine to sensitive freshwater aquatic life.

Saltwater Aquatic Life

No saltwater organisms have been tested with benzidine and no statement can be made concerning acute and chronic toxicity.

Human Health

For the maximum protection of human health from the potential carcinogenic effects due to exposure of benzidine through ingestion of contaminated water and contaminated aquatic organisms, the ambient water concentration should be zero based on the non-threshold assumption for this chemical. However, zero level may not be attainable at the present time. Therefore, the levels which may result in incremental increase of cancer risk over the lifetime are estimated at 10^{-5}, 10^{-6}, and 10^{-7}. The corresponding criteria are 1.2 ng/1, .12 ng/1, and .01 ng/1, respectively. If the above estimates are made for consumption of aquatic organisms only, excluding consumption of water, the levels are 5.3 ng/1, .53 ng/1, and .05 ng/1, respectively. Other concentrations representing different risk levels may be calculated by use of the Guidelines. The risk estimate range is presented for information purposes and does not represent an Agency judgment on an "acceptable" risk level.

Beryllium

Freshwater Aquatic Life

The available data for beryllium indicate that acute and chronic toxicity to freshwater aquatic life occurs at concentrations as low as 130 and 5.3 μg/l, respectively, and would occur at lower concentrations among species that are more sensitive than those tested. Hardness has a substantial effect on acute toxicity.

Salt water Aquatic Life

The limited saltwater data base available for beryllium does not permit any statement concerning acute or chronic toxicity.

Human Health

For the maximum protection of human health from the potential carcinogenic effects due to exposure of beryllium through ingestion of contaminated water and contaminated aquatic organisms, the ambient water concentration should be zero based on the non-threshold assumption for this chemical. However, zero level may not be attainable at the present time. Therefore, the levels which may result in incremental increase of cancer risk over the lifetime are estimated at 10^{-5}, 10^{-6}, and 10^{-7}. The corresponding criteria are 37 ng/l, 3.7 ng/l, and .37 ng/l, respectively. If the above estimates are made for consumption of aquatic organisms only, excluding consumption of water, the levels are 641 ng/l, 64.1 ng/l, and 6.41 ng/l, respectively. Other concentrations representing different risk levels may be calculated by use of the Guidelines. The risk estimate range is presented for information purposes and does not represent an Agency judgment on an "acceptable" risk level.

Cadmium

Freshwater Aquatic Life

For total recoverable cadmium the criterion (in μg/l) to protect freshwater aquatic life as derived using the Guidelines is the numerical value given

by $e^{(1.05[\ln(hardness)]-8.53)}$ as a 24-hour average and the concentration (in μg/l) should not exceed the numerical value given by $e^{(1.05[\ln(hardness)]-3.73)}$ at any time. For example, a hardnesses of 50, 100, and 200 mg/l as $CaCO_3$ the criteria are 0.012, 0.025, and 0.051 μg/l, respectively, and the concentration of total recoverable cadmium should not exceed 1.5, 3.0 and 6.3 μg/l, respectively, at any time.

Saltwater Aquatic Life

For total recoverable cadmium the criterion to protect saltwater aquatic life as derived using the Guidelines is 4.5 μg/l as a 24-hour average and the concentration should not exceed 59 μg/l at any time.

Human Health

The ambient water quality criterion for cadmium is recommended to be identical to the existing drinking water standard which is 10 μg/l. Analysis of the toxic effects data resulted in a calculated level which is protective of human health against the ingestion of contaminated water and contaminated aquatic organisms. The calculated value is comparable to the present standard. For this reason a selective criterion based on exposure solely from consumption of 6.5 grams of aquatic organisms was not derived.

Carbon Tetrachloride

Freshwater Aquatic Life

The available date for carbon tetrachloride indicate that acute toxicity to freshwater aquatic life occurs at concentrations as low as 35,200 μg/l and would occur at lower concentrations among species that are more sensitive than those tested. No data are available concerning the chronic toxicity of carbon tetrachloride to sensitive freshwater aquatic life.

Saltwater Aquatic Life

The available data for carbon tetrachloride indicate that acute toxicity to saltwater aquatic life occurs at concentrations as low as 50,000 μg/l and would occur at lower concentrations among species that are more sensitive that those tested. No data are available concerning the chronic toxicity of carbon tetrachloride to sensitive saltwater aquatic life.

Human Health

For the maximum protection of human health from the potential carcinogenic effects due to exposure of carbon tetrachloride through ingestion of contaminated water and contaminated aquatic organisms the ambient water concentration should be zero based on the non-threshold assumption for this chemical. However, zero level may not be attainable at the present time. Therefore, the levels which may result in incremental increase of cancer risk over the lifetime are estimated at 10^{-5}, 10^{-6}, and 10^{-7}. The corresponding criteria are 4.0μg/l, .40 μg/l, and .04 μg/l, respectively. If the above estimates are made for consumption of aquatic organisms only, excluding consumption of water, the levels are 69.4 μg/l, 6.94 μg/l, and .69 μg/l, respectively. Other concentrations representing different risk levels may be calculated by use of the Guidelines. The risk estimate range is presented for information purposes and does not represent an Agency judgment on an "acceptable" risk level.

Chlordane

Freshwater Aquatic Life

For chlordane the criterion to protect freshwater aquatic life as derived using the Guidelines is 0.0043 μg/l as a 24-hour average and the concentration should not exceed 2.4 μg/l at any time.

Saltwater Aquatic Life

For chlordane the criterion to protect saltwater aquatic life as derived using the Guidelines is 0.0040 μg/l as a 24-hour average and the concentration should not exceed 0.09 μg/l at any time.

Human Health

For the maximum protection of human health from the potential carcinogenic effects due to exposure of chlordane through ingestion of contaminated water and contaminated aquatic organisms, the ambient water concentration should be zero based on the non-threshold assumption for this chemical. However, zero level may not be attainable at the present time. Therefore, the levels which may result in incremental increase of cancer risk over the lifetime are estimated at 10^{-5}, 10^{-6}, and 10^{-7}. The corresponding criteria are 4.6 ng/l, .46 ng/l, and .046 ng/l, respectively. If the above estimates are made for consumption of aquatic organisms only, excluding consumption of water, the levels are 4.8 ng/l, .48 ng/l, and .048 ng/l, respectively. Other concentrations representing different risk levels may be calculated by use of the Guidelines. The risk estimate range is presented for information purposes and does not represent an Agency judgment on an "acceptable" risk level.

Chlorinated Benzenes

Freshwater Aquatic Life

The available data for chlorinated benzenes indicate that acute toxicity to freshwater aquatic life occurs at concentrations as low as 250 μg/l and would occur at lower concentrations among species that are more sensitive than those tested. No data are available concerning the chronic toxicity of the more toxic of the chlorinated benzenes to sensitive freshwater aquatic life but toxicity occurs at concentrations as low as 50 μg/l for a fish species exposed for 7.5 days.

Saltwater Aquatic Life

The available data for chlorinated benzenes indicate that acute and chronic toxicity to saltwater aquatic life occur at concentrations as low as 160 and 129 μg/l, respectively, and would occur at lower concentrations among species that are more sensitive than those tested.

Human Health

For the maximum protection of human health from the potential carcinogenic effects due to exposure of hexachlorobenzene through ingestion of contaminated water and contaminated aquatic organisms, the ambient water concentration should be zero based on the non-threshold assumption for this chemical. However, zero level may not be attainable at the present time. Therefore, the levels which may result in incremental increase of cancer risk over the lifetime are estimated at 10^{-5}, 10^{-6}, and 10^{-7}. The corresponding recommended criteria are 7.2 ng/l, .72 ng/l, and .072 ng/l, respectively. If the above estimates are made for consumption of aquatic organisms only, excluding consumption of water, the levels are 7.4 ng/l, .74 ng/l, and .074 ng/l, respectively.

For the protection of human health from the toxic properties of 1,2,4,5-tetrachlorobenzene ingested through water and contaminated aquatic organisms, the ambient water criterion is determined to be 38 μg/l.

For the protection of human health from the toxic properties of 1,2,4,5-tetrachlorobenzene ingested through contaminated aquatic organisms alone, the ambient water criterion is determined to be 48 μg/l.

For the protection of human health from the toxic properties of pentachlorobenzene ingested through water and contaminated aquatic organisms, the ambient water criterion is determined to be 74 μg/l.

For the protection of human health from the toxic properties of pentachlorobenzene ingested through contaminated aquatic organisms alone, the ambient water criterion is determined to be 85 μg/l.

Using the present guidelines, a satisfactory criterion cannot be derived

at this time due to the insufficiency in the available data for trichlorobenzene.

For comparison purposes, two approaches were used to derive criterion levels for monochlorobenzene. Based on available toxicity data, for the protection of public health, the derived level is 488 μg/l. Using available organoleptic data, for controlling undesirable taste and odor quality of ambient water, the estimated level is 20 μg/l. It should be recognized that organoleptic data as a basis for establishing a water quality criteria have limitations and have no demonstrated relationship to potential adverse human health effects.

Chlorinated Ethanes

Freshwater Aquatic Life

The available freshwater data for chlorinated ethanes indicate that toxicity increases greatly with increasing chlorination, and that acute toxicity occurs at concentrations as low as 118,000 μg/l for 1,2-dichloroethane, 18,000 μg/l for two trichloroethanes, 9,320 μg/l for two tetrachloroethanes, 7,240 μg/l for pentachloroethane, and 980 μg/l for hexachloroethane. Chronic toxicity occurs at concentrations as low as 20,000 μg/l for 1,2-dichloroethane, 9,400 μg/l for 1,1,2-trichloroethane, 2,400 μg/l for 1,1,2,2,-tetrachloroethane, 1,100 μg/l for pentachloroethane, and 540 μg/l for hexachloroethane. Acute and chronic toxicity would occur at lower concentrations among species that are more sensitive than those tested.

Saltwater Aquatic Life

The available saltwater data for chlorinated ethanes indicate that toxicity increases greatly with increasing chlorination and that acute toxicity to fish and invertebrate species occurs at concentrations as low as 113,000 μg/l for 1,2-dichloroethane, 31,200 μg/l for 1,1,1-trichloroethane, 9,020 μg/l for 1,1,2,2-tetrachloroethane, 390 μg/l for pentachloroethane, and 940 μg/l for hexachloroethane. Chronic toxicity occurs at concentrations as low as 281 μg/l for pentachloroethane. Acute and chronic toxicity would occur at lower concentrations among species that are more sensitive than those tested.

Human Health

For the maximum protection of human health from the potential carcinogenic effects due to exposure of 1,2-dichloroethane through ingestion of contaminated water and contaminated aquatic organisms, the ambient water concentration should be zero based on the non-threshold assumption for this chemical. However, zero level may not be attainable at the present time. Therefore, the levels which may result in incremental increase of cancer risk over the lifetime are estimated at 10^{-5}, 10^{-6}, and 10^{-7}. The corresponding criteria are 9.4 μg/l, .94 μg/l, and .094 μg/l, respectively. If the above estimates are made for consumption of aquatic organisms only, excluding consumption of water, the levels are 2,430 μg/l, 243 μg/l, and 24.3 μg/l respectively. Other concentrations representing different risk levels may be calculated by use of the Guidelines. The risk estimate range is presented for information purposes and does not represent an Agency judgment on an "acceptable" risk level.

For the protection of human health from the toxic properties of 1,1,1-trichloroethane ingested through water and contaminated aquatic organism, the ambient water criterion is determined to be 18.4 mg/l.

For the protection of human health from the toxic properties of 1,1,1,-trichloroethane ingested through contaminated aquatic organisms alone, the ambient water criterion is determined to be 1.03 g/l.

For the maximum protection of human health from the potential carcinogenic effects due to exposure of 1,1,2-trichloroethane through ingestion of contaminated water and contaminated aquatic organisms, the ambient water concentration should be zero based on the non-threshold assumption for this chemical. However, zero level may not be attainable at the present time. Therefore, the levels which may result in incremental increase of cancer risk over the lifetime are estimated at 10^{-5}, 10^{-6}, and 10^{-7}. The corresponding criteria are 6.0 μg/l, .6 μg/l, and .06 μg/l, respectively. If the above estimates are made for consumption of aquatic organisms only, excluding consumption of water, the levels are 418 μg/l, 41.8 μg/l, and 4.18 μg/l respectively. Other concentrations representing different risk levels may be calculated by use of the Guidelines. The risk estimate range is presented for information purposes and does not represent an Agency judgment on an "acceptable" risk level.

For the maximum protection of human health from the potential carcinogenic effects due to exposure of 1,1,2,2-tetrachloroethane through ingestion of contaminated water and contaminated aquatic organisms, the ambient water concentration should be zero based on the non-threshold assumption for this chemical. However, zero level may not be attainable at the present time. Therefore, the levels which may result in incremental increase of cancer risk over the lifetime are estimated at 10^{-5}, 10^{-6}, and 10^{-7}. The corresponding criteria are 1.7 μg/l, .17 μg/l, and .017 μg/l, respectively. If the above estimates are made for consumption of aquatic organisms only, excluding consumption of water, the levels are 107 μg/l, 10.7 μg/l, and 1.07 μg/l, respectively. Other concentrations representing different risk levels may be calculated by use of the Guidelines. The risk estimate range is presented for information purposes and does not represent an Agency judgment on an "acceptable" risk level.

For the maximum protection of human health from the potential carcinogenic effects due to exposure of hexachloroethane through ingestion of contaminated water and contaminated aquatic organisms, the ambient water concentration should be zero based on the non-threshold assumption for this chemical. However, zero level may not be attainable at the present time. Therefore, the levels which may result in incremental increase of cancer risk over the lifetime are estimated at 10^{-5}, 10^{-6}, and 10^{-7}. The corresponding criteria are 19 μg/l, 1.9 μg/l, and .19 μg/l, respectively. If the above estimates are made for consumption of aquatic organisms only, excluding consumption of water, the levels are 87.4 μg/l, 8.74 μg/l, and .87 μg/l, respectively. Other concentrations representing different risk levels may be calculated by use of the Guidelines. The risk estimate range is presented for information purposes and does not represent an Agency judgment on an "acceptable" risk level.

Using the present guidelines, a satisfactory criterion cannot be derived at this time due to the insufficiency in the available data for monochloroethane.

Using the present guidelines, a satisfactory criterion cannot be derived at this time due to the insufficiency in the available data for 1,1,-dichloroethane.

Using the present guidelines, a satisfactory criterion cannot be derived at this time due to the insufficiency in the available data for 1,1,1,2-tetrachloroethane.

Using the present guidelines, a satisfactory criterion cannot be derived at this time due to the insufficiency in the available data for pentachloroethane.

Chlorinated Naphthalenes

Freshwater Aquatic Life

The available data for chlorinated naphthalenes indicate that acute toxicity to freshwater aquatic life occurs at concentrations as low as 1,600 μg/l and would occur at lower concentrations among species that are

more sensitive than those tested. No data are available concerning the chronic toxicity of chlorinated naphthalenes to sensitive freshwater aquatic life.

Saltwater Aquatic Life

The available data for chlorinated napthalenes indicate that acute toxicity to saltwater aquatic life occurs at concentrations as low as 7.5 μg/l and would occur at lower concentrations among species that are more sensitive than those tested. No data are available concerning the chronic toxicity of chlorinated naphthalenes to sensitive saltwater aquatic life.

Human Health

Using the present guidelines, a satisfactory criterion cannot be derived at this time due to the insufficiency in the available data for chlorinated napthalenes.

Chlorinated Phenols

Freshwater Aquatic Life

The available freshwater data for chlorinated phenols indicate that toxicity generally increases with increasing chlorination, and that acute toxicity occurs at concentrations as low as 30 μg/l for 4-chloro-3-methylphenol to greater than 500,000 μg/l for other compounds. Chronic toxicity occurs at concentrations as low as 970 μg/l for 2,4,6-trichlorophenol. Acute and chronic toxicity would occur at lower concentrations among species that are more sensitive than those tested.

Saltwater Aquatic Life

The available saltwater data for chlorinated phenols indicate that toxicity generally increases with increasing chlorination and that acute toxicity occurs at concentrations as low as 440 μg/l for 2,3,5,6-tetrachlorophenol and 29,700 μg/l for 4-chlorophenol. Acute toxicity would occur at lower concentrations among species that are more sensitive than those tested. No data are available concerning the chronic toxicity of chlorinated phenols to sensitive saltwater aquatic life.

Human Health

Sufficient data is not available for 3-monochlorophenol to derive a level which would protect against the potential toxicity of this compound. Using available organoleptic data, for controlling undesirable taste and odor quality of ambient water, the estimated level is 0.1 μg/l. It should be recognized that organoleptic data as a basis for establishing a water quality criteria have limitations and have no demonstrated relationship to potential adverse human health effects.

Sufficient data is not available for 4-monochlorophenol to derive a level which would protect against the potential toxicity of this compound. Using available organoleptic data, for controlling undesirable taste and odor quality of ambient water, the estimated level is 0.1 μg/l. It should be recognized that organoleptic data as a basis for establishing a water quality criteria have limitations and have no demonstrated relationship to potential adverse human health effects.

Sufficient data is not available for 2,3-dichlorophenol to derive a level which would protect against the potential toxicity of this compound. Using available organoleptic data, for controlling undesirable taste and odor quality of ambient water, the estimated level is .04 μg/l. It should be recognized that organoleptic data as a basis for establishing a water quality criteria have limitations and have no demonstrated relationship to potential adverse human health effects.

Sufficient data is not available for 2,5-dichlorophenol to derive a level which would protect against the potential toxicity of this compound. Using available organoleptic data, for controlling undesirable taste and odor quality of ambient water, the estimated level is .5 μg/l. It should be recognized that organoleptic data as a basis for establishing a water quality criteria have limitations and have no demonstrated relationship to potential adverse human health effects.

Sufficient data is not available for 2,6-dichlorophenol to derive a level which would protect against the potential toxicity of this compound. Using available organoleptic data, for controlling undesirable taste and odor quality of ambient water, the estimated level is .2 μg/l. It should be recognized that organoleptic data as a basis for establishing a water quality criteria have limitations and have no demonstrated relationship to potential adverse human health effects.

Sufficient data is not available for 3,4-dichlorophenol to derive a level which would protect against the potential toxicity of this compound. Using available organoleptic data, for controlling undesirable taste and odor quality of ambient water, the estimated level is .3 μg/l. It should be recognized that organoleptic data as a basis for establishing a water quality criteria have limitations and have no demonstrated relationship to potential adverse human health effects.

Sufficient data is not available for 2,3,4,6-tetrachlorophenol to derive a level which would protect against the potential toxicity of this compound. Using available organoleptic data, for controlling undesirable taste and odor quality of ambient water, the estimated level is 1 μg/l. It should be recognized that organoleptic data as a basis for establishing a water quality criteria have limitations and have no demonstrated relationship to potential adverse human health effects.

For comparison purposes, two approaches were used to derive criterion levels for 2,4,5-trichlorophenol. Based on available toxicity data, for the protection of public health, the derived level is 2.6 mg/l. Using available organoleptic data, for controlling undesirable taste and odor quality of ambient water, the estimated level is 1.0 μg/l. It should be recognized that organoleptic data as a basis for establishing a water quality criteria have limitations and have no demonstrated relationship to potential adverse human health effects.

For the maximum protection of human health from the potential carcinogenic effects due to exposure of 2,4,6-trichlorophenol through ingestion of contaminated water and contaminated aquatic organisms, the ambient water concentration should be zero based on the non-threshold assumption for this chemical. However, zero level may not be attainable at the present time. Therefore, the levels which may result in incremental increase of cancer risk over the lifetime are estimated at 10^{-5}, 10^{-6}, and 10^{-7}. The corresponding criteria are 12 μg/l, 1.2 μg/l, and .12 μg/l respectively. If the above estimates are made for consumption of aquatic organisms only, excluding consumption of water, the levels are 36 μg/l, 3.6 μg/l, and .36 μg/l, respectively. Other concentrations representing different risk levels may be calculated by use of the Guidelines. The risk estimate range is presented for information purposes and does not represent an Agency judgment on an "acceptable" risk level.

Using available organoleptic data, for controlling undesirable taste and odor quality of ambient water, the estimated level is 2 μg/l. It should be recognized that organoleptic data as a basis for establishing a water quality criterion have limitations and have no demonstrated relationship to potential adverse human health effects.

Sufficient data is not available for 2-methyl-4-chlorophenol to derive a level which would protect against any potential toxicity of this compound. Using available organoleptic data, for controlling undesirable taste and odor quality of ambient water, the estimated level is 1800 μg/l. It should be

recognized that organoleptic data as a basis for establishing a water quality criterion have limitations and have no demonstrated relationship to potential adverse human health effects.

Sufficient data is not available for 3-methyl-4-chlorophenol to derive a level which would protect against the potential toxicity of this compound. Using available organoleptic data, for controlling undesirable taste and odor quality of ambient water, the estimated level is 3000 μg/l. It should be recognized that organoleptic data as a basis for establishing a water quality criterion have limitations and have no demonstrated relationship to potential adverse human health effects.

Sufficient data is not available for 3-methyl-6-chlorophenol to derive a level which would protect against the potential toxicity of this compound. Using available organoleptic data, for controlling undesirable taste and odor quality of ambient water, the estimated level is 20 μg/l. It should be recognized that organoleptic data as a basis for establishing a water quality criterion have limitations and have no demonstrated relationship to potential adverse human health effects.

Chloroalkyl Ethers

Freshwater Aquatic Life

The available data for chloroalkyl ethers indicate that acute toxicity to freshwater aquatic life occurs at concentrations as low as 238,000 μg/l and would occur at lower concentrations among species that are more sensitive than those tested. No definitive data are available concerning the chronic toxicity of chloroalkyl ethers to sensitive freshwater aquatic life.

Saltwater Aquatic Life

No saltwater organisms have been tested with any chloroalkyl ether and no statement can be made concerning acute and chronic toxicity.

Human Health

For the maximum protection of human health from the potential carcinogenic effects due to exposure of bis-(chloromethyl)-ether through ingestion of contaminated water and contaminated aquatic organisms, the ambient water concentration should be zero based on the non-threshold assumption for this chemical. However, zero level may not be attainable at the present time. Therefore, the levels which may result in incremental increase of cancer risk over the lifetime are estimated at 10^{-5}, 10^{-6}, and 10^{-7}. The corresponding criteria are .038 ng/l, .0038 ng/l, and .00038 ng/l, respectively. If the above estimates are made for consumption of aquatic organisms only, excluding consumption of water, the levels are 18.4 ng/l, 1.84 ng/l, and .184 ng/l, respectively. Other concentrations representing different risk levels may be calculated by use of the Guidelines. The risk estimate range is presented for information purposes and does not represent an Agency judgment on an "acceptable" risk level.

For the maximum protection of human health from the potential carcinogenic effects due to exposure of bis (2-chloroethyl) ether through ingestion of contaminated water and contaminated aquatic organisms, the ambient water concentration should be zero based on the non-threshold assumption for this chemical. However, zero level may not be attainable at the present time. Therefore, the levels which may result in incremental increase of cancer risk over the lifetime are estimated at 10^{-5}, 10^{-6}, and 10^{-7}. The corresponding criteria are .3 μg/l, .03 μg/l, and .003 μg/l, respectively. If the above estimates are made for consumption of aquatic organisms only, excluding consumption of water, the levels are 13.6 μg/l, 1.36 μg/l, and .136 μg/l, respectively. Other concentrations representing different risk levels may be calculated by use of the Guidelines. The risk estimate range is presented for information purposes and does not represent an Agency judgment on an "acceptable" risk level.

For the protection of human health from the toxic properties of bis (2-chloroisopropyl) ether ingested through water and contaminated aquatic organisms, the ambient water criterion is determined to be 34.7 μg/l.

For the protection of human health from the toxic properties of bis (2-chloroisopropyl) ether ingested through contaminated aquatic organisms alone, the ambient water criterion is determined to be 4.36 mg/l.

Chloroform

Freshwater Aquatic Life

The available data for choloroform indicate that acute toxicity to freshwater aquatic life occurs at concentrations as low as 28,900 μg/l, and would occur at lower concentrations among species that are more sensitive than the three tested species. Twenty-seven-day LC50 values indicate that chronic toxicity occurs at concentrations as low as 1,240 μg/l, and could occur at lower concentrations among species or other life stages that are more sensitive than the earliest life cycle stage of the rainbow trout.

Saltwater Aquatic Life

The data base for saltwater species is limited to one test and no statement can be made concerning acute or chronic toxicity.

Human Health

For the maximum protection of human health from the potential carcinogenic effects due to exposure of chloroform through ingestion of contaminated water and contaminated aquatic organisms, the ambient water concentration should be zero based on the non-threshold assumption for this chemical. However, zero level may not be attainable at the present time. Therefore, the levels which may result in incremental increase of cancer risk over the lifetime are estimated at 10^{-5}, 10^{-6}, and 10^{-7}. The corresponding criteria are 1.90 μg/l, .19 μg/l, and .019 μg/l, respectively. If the above estimates are made for consumption of aquatic organisms only, excluding consumption of water, the levels are 157 μg/l, 15.7 μg/l, and 1.57 μg/l, respectively. Other concentrations representing different risk levels may be calculated by use of the Guidelines. The risk estimate range is presented for information purposes and does not represent an Agency judgment on an "acceptable" risk level.

2-Chlorophenol

Freshwater Aquatic Life

The availabe data for 2-chlorophenol indicate that acute toxicity to freshwater aquatic life occurs at concentrations as low as 4,380 μg/l and would occur at lower concentrations among species that are more sensitive that those tested. No definitive data are available concerning the chronic toxicity of 2-chlorophenol to sensitive freshwater aquatic life but flavor impairment occurs in one species of fish at concentrations as low as 2,000 μg/l.

Saltwater Aquatic Life

No saltwater organisms have been tested with 2-chlorophenol and no statement can be made concerning acute and chronic toxicity.

Human Health

Sufficient data is not available for 2-chlorophenol to derive a level which would protect against the potential toxicity of this compound. Using available organoleptic data, for controlling undesirable taste and odor quality of ambient water, the estimated level is 0.1 μg/l. It should be recognized that organoleptic data as a basis for establishing a water quality criteria have limitations and have no

demonstrated relationship to potential adverse human health effects.

Chromium

Freshwater Aquatic Life

For total recoverable hexavalent chromium the criterion to protect freshwater aquatic life as derived using the Guidelines is 0.29 μg/l as a 24-hour average and the concentration should not exceed 21 μg/l at any time.

For freshwater aquatic life the concentration (in μg/l) of total recoverable trivalent chromium should not exceed the numerical value given by "e[1.08[ln(hardness)]+3.48]" at any time. For example, at hardnesses of 50, 100 and 200 mg/l as $CaCO_3$ the concentration of total recoverable trivalent chromium should not exceed 2,200, 4,700, and 9,900 μg/l, respectively, at any time. The available data indicate that chronic toxicity to freshwater aquatic life occurs at concentrations as low a 44 μg/l and would occur at lower concentrations among species that are more sensitive than those tested.

Saltwater Aquatic Life

For total recoverable hexavalent chromium the criterion to protect saltwater aquatic life as derived using the Guidelines is 18 μg/l as a 24-hour average and the concentration should not exceed 1,260 μg/l at any time.

For total recoverable trivalent chromium, the availabe data indicate that acute toxicity to saltwater aquatic life occurs at concentrations as low as 10,300 μg/l, and would occur at lower concentrations amoung species that are more sensitive than those tested. No data are available concerning the chronic toxicity of trivalent chromium to sensitive saltwater aquatic life.

Human Health

For the protection of human health from the toxic properties of Chromium III ingested through water and contaminated aquatic organisms, the ambient water criterion is determined to be 170 mg/l.

For the protection of human health from the toxic properties of Chromium III ingested through contaminated aquatic organisms alone, the ambient water criterion is determined to be 3433 mg/l.

The ambient water quality criterion for total Chromium VI is recommended to be identical to the existing drinking water standard which is 50 μg/l. Analysis of the toxic effects data resulted in a calculated level which is protective of human health against the ingestion of contaminated water and contaminated aquatic organisms. The calculated value is comparable to the present standard. For this reason a selective criterion based on exposure solely from consumption of 6.5 grams of aquatic organisms was not derived.

Copper

Freshwater Aquatic Life

For total recoverable copper the criterion to protect freshwater aquatic life as derived using the Guidelines is 5.6 μg/l as a 24-hour average and the concentration (in μg/l) should not exceed the numerical value given by e[0.94[ln(hardness)]-1.23] at any time. For example, at hardnesses of 50, 100, and 200 mg/l $CaCO_3$ the concentration of total recoverable copper should not exceed 12, 22, and 43 μg/l at any time.

Saltwater Aquatic Life

For total recoverable copper the criterion to protect saltwater aquatic life as derived using the Guidelines is 4.0 μg/l as a 24-hour average and the concentration should not exceed 23 μg/l at any time.

Human Health

Sufficient data is not available for copper to derive a level which would protect against the potential toxicity of this compound. Using available organoleptic data, for controlling undesirable taste and odor quality of ambient water, the estimated level is 1 mg/l. It should be recognized that organoleptic data as a basis for establishing a water quality criteria have limitations and have no demonstrated relationship to potential adverse human health effects.

Cyanide

Freshwater Aquatic Life

For free cyanide (sum of cyanide present as HCN and CN^-, expressed as CN) the criterion to protect freshwater aquatic life as derived using the Guidelines is 3.5 μg/l as a 24-hour average and the concentration should not exceed 52 μg/l at any time.

Saltwater Aquatic Life

The available data for free cyanide (sum of cyanide present as HCN and CN^-, expressed as CN) indicate that acute toxicity to saltwater aquatic life occurs at concentrations as low as 30 μg/l and would occur at lower concentrations among species that are more sensitive than those tested. If the acute-chronic ratio for saltwater organisms is similar to that for freshwater organisms, chronic toxicity would occur at concentrations as low as 2.0 μg/l for the tested species and at lower concentrations among species that are more sensitive than those tested.

Human Health

The ambient water quality criterion for cyanide is recommended to be identical to the existing drinking water standard which is 200 μg/l. Analysis of the toxic effects data resulted in a calculated level which is protective of human health against the ingestion of contaminated water and contaminated aquatic organisms. The calculated value is comparable to the present standard. For this reason a selective criterion based on exposure solely from consumption of 6.5 grams of aquatic organisms was not derived.

DDT and Metabolites

Freshwater Aquatic Life

DDT

For DDT and its metabolites the criterion to protect freshwater aquatic life as derived using the Guidelines is 0.0010 μg/l as a 24-hour average and the concentration should not exceed 1.1 μg/l at any time.

TDE

The available data for TDE indicate that acute toxicity to freshwater aquatic life occurs at concentrations as low as 0.6 μg/l and would occur at lower concentrations among species that are more sensitive than those tested. No data are available concerning the chronic toxicity of TDE to sensitive freshwater aquatic life.

DDE

The available data for DDE indicate that acute toxicity to freshwater aquatic life occurs at concentrations as low as 1,050 μg/l and would occur at lower concentrations among species that are more sensitive than those tested. No data are available concerning the chronic toxicity of DDE to sensitive freshwater aquatic life.

Saltwater Aquatic Life

DDT

For DDT and its metabolites the criterion to protect saltwater aquatic life as derived using the Guidelines is 0.0010 μg/l as a 24-hour average and the concentration should not exceed 0.13 μg/l at any time.

TDE

The available data for TDE indicate that acute toxicity to saltwater aquatic life occurs at concentrations as low as 3.6 μg/l and would occur at lower concentrations among species that are more sensitive than those tested. No data are available concerning the

chronic toxicity of TDE to sensitive saltwater aquatic life.

DDE

The available data for DDE indicate that acute toxicity to saltwater aquatic life occurs at concentrations as low as 14 μg/l and would occur at lower concentrations among species that are more sensitive than those tested. No data are available concerning the chronic toxicity of DDE to sensitive saltwater aquatic life.

Human Health

For the maximum protection of human health from the potential carcinogenic effects due to exposure of DDT through ingestion of contaminated water and contaminated aquatic organisms, the ambient water concentration should be zero based on the non-threshold assumption for this chemical. However, zero level may not be attainable at the present time. Therefore, the levels which may result in incremental increase of cancer risk over the lifetime are estimated at 10^{-5}, 10^{-6}, and 10^{-7}. The corresponding criteria are .24 ng/l, .024 ng/l, and .0024 ng/l, respectively. If the above estimates are made for consumption of aquatic organisms only, excluding consumption of water, the levels are .24 ng/l, .024 ng/l, and .0024 ng/l, respectively. Other concentrations representing different risk levels may be calculated by use of the Guidelines. The risk estimate range is presented for information purposes and does not represent an Agency judgment of an "acceptable" risk level.

Dichlorobenzenes

Freshwater Aquatic Life

The available data for dichlorobenzenes indicate that acute and chronic toxicity to freshwater aquatic life occurs at concentrations as low as 1,120 and 763 μg/l, respectively, and would occur at lower concentrations among species that are more sensitive than those tested.

Saltwater Aquatic Life

The available data for dichlorobenzenes indicate that acute toxicity to saltwater aquatic life occurs at concentrations as low as 1,970 μg/l and would occur at lower concentrations among species that are more sensitive than those tested. No data are available concerning the chronic toxicity of dichlorobenzenes to sensitive saltwater aquatic life.

Human Health

For the protection of human health from the toxic properties of dichlorobenzenes (all isomers) ingested through water and contaminated aquatic organisms, the ambient water criterion is determined to be 400 μg/l.

For the protection of human health from the toxic properties of dichlorobenzenes (all isomers) ingested through contaminated aquatic organisms alone, the ambient water criterion is determined to be 2.6 mg/l.

Dichlorobenzidines

Freshwater Aquatic Life

The data base available for dichlorobenzidines and freshwater organisms is limited to one test on bioconcentration of 3,3'-dichlorobenzidine and no statement can be made concerning acute or chronic toxicity.

Saltwater Aquatic Life

No saltwater organisms have been tested with any dichlorobenzidine and no statement can be made concerning acute or chronic toxicity.

Human Health

For the maximum protection of human health from the potential carcinogenic effects due to exposure of dichlorobenzidine through ingestion of contaminated water and contaminated aquatic organisms, the ambient water concentration should be zero base on the non-threshold assumption for this chemical. However, zero level may not be attainable at the present time. Therefore, the levels which may result in incremental increase of cancer risk over the lifetime are estimated at 10^{-5}, 10^{-6}, and 10^{-7}. The corresponding criteria are .103 μg/l, .0103 μg/l, and .00103 μg/l, respectively. If the above estimates are made for consumption of aquatic organisms only, excluding consumption of water, the levels are .204 μg/l, .0204 μg/l, and .00204 μg/l, respectively. Other concentrations representing different risk levels may be calculated by use of the Guidelines. The risk estimate range is presented for information purposes and does not represent an Agency judgment on an "acceptable" risk level.

Dichloroethylenes

Freshwater Aquatic Life

The available data for dichloroethylenes indicate that acute toxicity to freshwater aquatic life occurs at concentrations as low as 11,600 μg/l and would occur at lower concentrations among species that are more sensitive than those tested. No definitive data are available concerning the chronic toxicity of dichlorethylenes to sensitive freshwater aquatic life.

Saltwater Aquatic Life

The available data for dichlorethylenes indicate that acute toxicity to saltwater aquatic life occurs at concentrations as low as 224,000 μg/l and would occur at lower concentrations among species that are more sensitive than those tested. No data are available concerning the chronic toxicity dichloroethylenes to sensitive saltwater aquatic life.

Human Health

For the maximum protection of human health from the potential carcinogenic effects due to exposure of 1,1-dichloroethylene through ingestion of contaminated water and contaminated aquatic organisms, the ambient water concentration should be zero based on the non-threshold assumption for this chemical. However, zero level may not be attainable at the present time. Therefore, the levels which may result in incremental increase of cancer risk over the lifetime are estimated at 10^{-5}, 10^{-6}, and 10^{-7}. The corresponding criteria are .33 μg/l, .033 μg/l, and .0033 μg/l, respectively. If the above estimates are made for consumption of aquatic organisms only, excluding consumption of water, the levels are 18.5 μg/l, 1.85 μg/l, and .185 μg/l, respectively. Other concentrations representing different risk levels may be calculated by use of the Guidelines. The risk estimate range is presented for information purposes and does not represent an Agency judgment on an "acceptable" risk level.

Using the present guidelines, a satisfactory criterion cannot be derived at this time due to the insufficency in the available data for 1,2-dichloroethylene.

2,4-Dichlorophenol

Freshwater Aquatic Life

The available data for 2,4-dichlorophenol indicate that acute and chronic toxicity to freshwater aquatic life occurs at concentrations as low as 2,020 and 365 μg/l, respectively, and would occur at lower concentrations among species that are more sensitive that those tested. Mortality to early life stages of one species of fish occurs at concentrations as low as 70 μg/l.

Saltwater Aquatic Life

Only one test has been conducted with saltwater organisms on 2,4-dichlorophenol and no statement can be made concerning acute or chronic toxicity.

Human Health

For comparison purposes, two approaches were used to derive criterion levels for 2,4-dichlorophenol.

Based on available toxicity data, for the protection of public health, the derived level is 3.09 mg/l. Using available organoleptic data, for controlling undesirable taste and odor quality of ambient water, the estimated level is 0.3 μg/l. It should be recognized that organoleptic data as a basis for establishing a water quality criteria have limitations and have no demonstrated relationship to potential adverse human health effects.

Dichloropropanes/Dichloropropenes

Freshwater Aquatic Life

The available data for dichloropropanes indicate that acute and chronic toxicity to freshwater aquatic life occurs at concentrations as low as 23,000 and 5,700 μg/l, respectively, and would occur at lower concentrations among species that are more sensitive than those tested.

The available data for dichloropropenes indicate that acute and chronic toxicity to freshwater aquatic life occurs at concentrations as low as 6,060 and 244 μg/l, respectively, and would occur at lower concentrations among species that are more sensitive than those tested.

Saltwater Aquatic Life

The available data for dichloropropanes indicate that acute and chronic toxicity to saltwater aquatic life occurs at concentrations as low as 10,300 and 3,040 μg/l, respectively, and would occur at lower concentrations among species that are more sensitive than those tested.

The available data for dichloropropenes indicate that acute toxicity to saltwater aquatic life occurs at concentrations as low a as 790 μg/l, and would occur at lower concentrations among species that are more sensitive than those tested. No data are available concerning the chronic toxicity of dichloropropenes to sensitive saltwater aquatic life.

Human Health

Using the present guidelines, a satisfactory criterion cannot be derived at this time due to the insufficiency in the available data for dichloropropanes.

For the protection of human health from the toxic properties of dichloropropenes ingested through water and contaminated aquatic organisms, the ambient water criterion is determined to be 87 μg/l.

For the protection of human health from the toxic properties of dichloropropenes ingested through contaminated aquatic organisms alone, the ambient water criterion is determined to be 14.1 mg/l.

2,4-Dimethylphenol

Freshwater Aquatic Life

The available data for 2,4-dimethylphenol indicate that acute toxicity to freshwater aquatic life occurs at concentrations as low as 2,120 μg/l and would occur at lower concentrations among species that are more sensitive than those tested. No data are available concerning the chronic toxicity of dimethylphenol to sensitive freshwater aquatic life.

Saltwater Aquatic Life

No saltwater organisms have been tested with 2,4-dimethylphenol and no statement can be made concerning acute and chronic toxicity.

Human Health

Sufficient data are not available for 2,4-dimethylphenol to derive a level which would protect against the potential toxicity of this compound. Using available organoleptic data, for controlling undersirable taste and odor quality of ambient water, the estimated level is 400 μg/l. It should be recognized that organoleptic data as a basis for establishing a water quality criteria have limitations and have no demonstrated relationship to potential adverse human health effects.

2,4-Dinitrotoluene

Freshwater Aquatic Life

The available data for 2,4-dinitrotoluene indicate that acute and chronic toxicity to freshwater aquatic life occurs at concentrations as low as 330 and 230 μg/l, respectively, and would occur at lower concentrations among species that are more sensitive than those tested.

Saltwater Aquatic Life

The available data for 2,4-dinitrotoluenes indicate that acute toxicity to saltwater aquatic life occurs at concentrations as low as 590 μg/l and would occur at lower concentrations among species that are more sensitive than those tested. No data are available concerning the chronic toxicity of 2,4-dinitrotoluenes to sensitive saltwater aquatic life but a decrease in algal cell numbers occurs at concentrations as low as 370 μg/l.

Human Health

For the maximum protection of human health from the potential carcinogenic effects due to exposure of 2,4-dinitrotoluene through ingestion of contaminated water and contaminated aquatic organisms, the ambient water concentration should be zero based on the non-threshold assumption for this chemical. However, zero level may not be attainable at the present time. Therefore, the levels which may result in incremental increase of cancer risk over the lifetime are estimated at 10^{-5}, 10^{-6}, and 10^{-7}. The corresponding criteria are 1.1 μg/l, 0.11 μg/l, and 0.011 μg/l, respectively. If the above estimates are made for consumption of aquatic organisms only, excluding consumption of water, the levels are 91 μg/l, 9.1 μg/l, and 0.91 μg/l, respectively. Other concentrations representing different risk levels may be calculated by use of the Guidelines. The risk estimate range is presented for information purposes and does not represent an Agency judgment on an "acceptable" risk level.

1,2-Diphenylhydrazine

Freshwater Aquatic Life

The available data for 1,2-diphenylhydrazine indicate that acute toxicity to freshwater aquatic life occurs at concentrations as low as 270 μg/l and would occur at lower concentrations among species that are more sensitive than those tested. No data are available concerning the chronic toxicity of 1,2-diphenylhydrazine to sensitive freshwater aquatic life.

Saltwater Aquatic Life

No saltwater organisms have been tested with 1,2-diphenylhydrazine and no statement can be made concerning acute and chronic toxicity.

Human Health

For the maximum protection of human health from the potential carcinogenic effects due to exposure of 1,2-diphenylhydrazine through ingestion of contaminated water and contaminated aquatic organisms, the ambient water concentration should be zero based on the non-threshold assumption for this chemical. However, zero level may not be attainable at the present time. Therefore, the levels which may result in incremental increase of cancer risk over the lifetime are estimated at 10^{-5}, 10^{-6}, and 10^{-7}. The corresponding criteria are 422 ng/l, 42 ng/l, and 4 ng/l, respectively. If the above estimates are made for consumption of aquatic organisms only, excluding consumption of water, the levels are 5.6 μg/l, 0.56 μg/l, and 0.056 μg/l, respectively. Other concentrations representing different risk levels may be calculated by use of the Guidelines. The risk estimate range is presented for information purposes and does not

represent an Agency judgment on an "acceptable" risk level.

Endosulfan

Freshwater Aquatic Life

For endosulfan the criterion to protect freshwater aquatic life as derived using the Guidelines is 0.056 μg/l as a 24-hour average and the concentration should not exceed 0.22 μg/l at any time.

Saltwater Aquatic Life

For endosulfan the criterion to protect saltwater aquatic life as derived using the Guidelines is 0.0087 μg/l as a 24-hour average and the concentration should not exceed 0.034 μg/l at any time.

Human Health

For the protection of human health from the toxic properties of endosulfan ingested through water and contaminated aquatic organisms, the ambient water criterion is determined to be 74 μg/l.

For the protection of human health from the toxic properties of endosulfan ingested through contaminated aquatic organisms alone, the ambient water criterion is determined to be 159 μg/l.

Endrin

Freshwater Aquatic Life

For endrin the criterion to protect freshwater aquatic life as derived using the Guidelines is 0.0023 μg/l as a 24-hour average and the concentration should not exceed 0.18 μg/l at any time.

Saltwater Aquatic Life

For endrin the criterion to protect saltwater aquatic life as derived using the Guidelines is 0.0023 μg/l as a 24-hour average and the concentration should not exceed 0.037 μg/l at any time.

Human Health

The ambient water quality criterion for endrin is recommended to be identical to the existing drinking water standard which is 1 μg/l. Analysis of the toxic effects data resulted in a calculated level which is protective of human health against the ingestion of contaminated water and contaminated aquatic organisms. The calculated value is comparable to the present standard. For this reason a selective criterion based on exposure solely from consumption of 6.5 grams of aquatic organisms was not derived.

Ethylbenzene

Freshwater Aquatic Life

The available data for ethylbenzene indicate that acute toxicity to freshwater aquatic life occurs at concentrations as low as 32,000 μg/l and would occur at lower concentrations among species that are more sensitive than those tested. No definitive data are available concerning the chronic toxicity of ethylbenzene to sensitive freshwater aquatic life.

Saltwater Aquatic Life

The available data for ethylbenzene indicate that acute toxicity to saltwater aquatic life occurs at concentrations as low as 430 μg/l and would occur at lower concentrations among species that are more sensitive than those tested. No data are available concerning the chronic toxicity of ethylbenzene to sensitive saltwater aquatic life.

Human Health

For the protection of human health from the toxic properties of ethylbenzene ingested through water and contaminated aquatic organisms, the ambient water criterion is determined to be 1.4 mg/l.

For the protection of human health from the toxic properties of ethylbenzene ingested through contaminated aquatic organisms alone, the ambient water criterion is determined to be 3.28 mg/l.

Fluoranthene

Freshwater Aquatic Life

The available data for fluoranthene indicate that acute toxicity to freshwater aquatic life occurs at concentrations as low as 3980 μg/l and would occur at lower concentrations among species that are more sensitive than those tested. No data are available concerning the chronic toxicity of fluoranthene to sensitive freshwater aquatic life.

Saltwater Aquatic Life

The available data for fluoranthene indicate that acute and chronic toxicity to saltwater aquatic life occur at concentrations as low as 40 and 16 μg/l, respectively, and would occur at lower concentrations among species that are more sensitive than those tested.

Human Health

For the protection of human health from the toxic properties of fluoranthene ingested through water and contaminated aquatic organisms, the ambient water criterion is determined to be 42 μg/l.

For the protection of human health from the toxic properties of fluoranthene ingested through contaminated aquatic organisms alone, the ambient water criterion is determined to be 54 μg/l.

Haloethers

Freshwater Aquatic Life

The available data for haloethers indicate that acute and chronic toxicity to freshwater aquatic life occur at concentrations as low as 360 and 122 μg/l, respectively, and would occur at lower concentrations among species that are more sensitive than those tested.

Saltwater Aquatic Life

No saltwater organisms have been tested with any haloether and no statement can be made concerning acute or chronic toxicity.

Human Health

Using the present guidelines, a satisfactory criterion cannot be derived at this time due to the insufficiency in the available data for haloethers.

Halomethanes

Freshwater Aquatic Life

The available data for halomethanes indicate that acute toxicity to freshwater aquatic life occurs at concentrations as low as 11,000 μg/l and would occur at lower concentrations among species that are more sensitive than those tested. No data are available concerning the chronic toxicity of halomethanes to sensitive freshwater aquatic life.

Saltwater Aquatic Life

The available data for halomethanes indicate that acute and chronic toxicity to saltwater aquatic life occur at concentrations as low as 12,000 and 6,400 μg/l, respectively, and would occur at lower concentrations among species that are more sensitive than those tested. A decrease in algal cell numbers occurs at concentrations as low as 11,500 μg/l.

Human Health

For the maximum protection of human health from the potential carcinogenic effects due to exposure of chloromethane, bromomethane, dichloromethane, bromodichloromethane, tribromomethane, dichlorodifluoromethane, trichlorofluoromethane, or combinations of these chemicals through ingestion of contaminated water and contaminated aquatic organisms, the ambient water concentration should be zero based on the non-threshold assumption for this chemical. However, zero level may not be attainable at the present time. Therefore, the levels which may result in incremental increase of cancer risk, over the lifetimes are estimated at 10^{-5}, 10^{-6}, and 10^{-7}. The corresponding criteria are

1.9 μg/l, 0.19 μg/l, and 0.019 μg/l, respectively. If the above estimates are made for consumption of aquatic organisms only, excluding consumption of water, the levels are 157 μg/l, 15.7 μg/l, and 1.57 μg/l, respectively. Other concentrations representing different risk levels may be calculated by use of the Guidelines. The risk estimate range is presented for information purposes and does not represent an Agency judgment on an "acceptable" risk level.

Heptachlor

Freshwater Aquatic Life

For heptachlor the criterion to protect freshwater aquatic life as derived using the Guidelines is 0.0038 μg/l as a 24-hour average and the concentration should not exceed 0.52 μg/l at any time.

Saltwater Aquatic Life

For heptachlor the criterion to protect saltwater aquatic life as derived using the Guidelines is 0.0036 μg/l as a 24-hour average and the concentration should not exceed 0.053 μg/l at any time.

Human Health

For the maximum protection of human health from the potential carcinogenic effects due to exposure of heptachlor through ingestion of contaminated water and contaminated aquatic organisms, the ambient water concentration should be zero based on the non-threshold assumption for this chemical. However, zero level may not be attainable at the present time. Therefore, the levels which may result in incremental increase of cancer risk, over the lifetimes are estimated at 10^{-5}, 10^{-6}, and 10^{-7}. The corresponding criteria are 2.78 ng/l, .28 ng/l, and .028 ng/l, respectively. If the above estimates are made for consumption of aquatic organisms only, excluding consumption of water, the levels are 2.85 ng/l, .29 ng/l, and .029 ng/l, respectively. Other concentrations representing different risk levels may be calculated by use of the Guidelines. The risk estimate range is presented for information purposes and does not represent an Agency judgment on an "acceptable" risk level.

Hexachlorobutadiene

Freshwater Aquatic Life

The available data for hexachlorobutadiene indicate that acute and chronic toxicity to freshwater aquatic life occur at concentrations as low as 90 and 9.3 μg/l, respectively, and would occur at lower concentrations among species that are more sensitive than those tested.

Saltwater Aquatic Life

The available data for hexachlorobutadiene indicate that acute toxicity to saltwater aquatic life occurs at concentrations as low as 32 μg/l and would occur at lower concentrations among species that are more sensitive that those tested. No data are available concerning the chronic toxicity of hexachlorobutadiene to sensitive saltwater aquatic life

Human Health

For the maximum protection of human health from the potential carcinogenic effects due to exposure of hexachlorobutadiene through ingestion of contaminated water and contaminated aquatic organisms, the ambient water concentration should be zero based on the non-threshold assumption for this chemical. However, zero level may not be attainable at the present time. Therefore, the levels which may result in incremental increase of cancer risk, over the lifetimes are estimated at 10^{-5}, 10^{-6}, and 10^{-7}. The corresponding criteria are 4.47 μg/l, 0.45 μg/l, and 0.045 μg/l, respectively. If the above estimates are made for consumption of aquatic organisms only, excluding consumption of water, the levels are 500 μg/l, 50 μg/l, and 5 μg/l respectively. Other concentrations representing different risk levels may be calculated by use of the Guidelines. The risk estimate range is presented for information purposes and does not represent an Agency judgment on an "acceptable" risk level.

Hexachlorocyclohexane

Lindane

Freshwater Aquatic Life

For Lindane the criterion to protect freshwater aquatic life as derived using the Guidelines is 0.080 μg/l as a 24-hour average and the concentration should not exceed 2.0 μg/l at any time.

Saltwater Aquatic Life

For saltwater aquatic life the concentration of lindane should not exceed 0.16 μg/l at any time. No data are available concerning the chronic toxicity of lindane to sensitive saltwater aquatic life.

BHC

Freshwater Aquatic Life

The available date for a mixture of isomers of BHC indicate that acute toxicity to freshwater aquatic life occurs at concentrations as low as 100 μg/l and would occur at lower concentrations among species that are more sensitive than those tested. No data are available concerning the chronic toxicity of a mixture of isomers of BHC to sensitive freshwater aquatic life.

Saltwater Aquatic Life

The available date for a mixture of isomers of BHC indicate that acute toxicity to saltwater aquatic life occurs at concentrations as low as 0.34 μg/l and would occur at lower concentrations among species that are more sensitive than those tested. No data are available concerning the chronic toxicity of a mixture of isomers of BHC to sensitive saltwater aquatic life.

Human Health

For the maximum protection of human health from the potential carcinogenic effects due to exposure of alpha-HCH through ingestion of contaminated water and contaminated aquatic organisms, the ambient water concentration should be zero based on the non-threshold assumption for this chemical. However, zero level may not be attainable at the present time. Therefore, the levels which may result in incremental increase of cancer risk, over the lifetimes are estimated at 10^{-5}, 10^{-6}, and 10^{-7}. The corresponding criteria are 92 ng/l, 9.2 ng/l, and .92 ng/l, respectively. If the above estimates are made for consumption of aquatic organisms only, excluding consumption of water, the levels are 310 ng/l, 31.0 ng/l, and 3.1 ng/l respectively. Other concentrations representing different risk levels may be calculated by use of the Guidelines. The risk estimate range is presented for information purposes and does not represent an Agency judgment on an "acceptable" risk level.

For the maximum protection of human health from the potential carcinogenic effects due to exposure of beta-HCH through ingestion of contaminated water and contaminated aquatic organisms, the ambient water concentration should be zero based on the non-threshold assumption for this chemical. However, zero level may not be attainable at the present time. Therefore, the levels which may result in incremental increase of cancer risk, over the lifetimes are estimated at 10^{-5}, 10^{-6}, and 10^{-7}. The corresponding criteria are 163 ng/l, 16.3 ng/l, and 1.63 ng/l, respectively. If the above estimates are made for consumption of aquatic organisms only, excluding consumption of water, the levels are 547 ng/l, 54.7 ng/l, and 5.47 ng/l, respectively. Other concentrations representing different risk levels may be calculated by use of the Guidelines. The risk estimate range is presented for information purposes and does not

represent an Agency judgment on an "acceptable" risk level.

For the maximum protection of human health from the potential carcinogenic effects due to exposure of tech-HCH through ingestion of contaminated water and contaminated aquatic organisms, the ambient water concentration should be zero based on the non-threshold assumption for this chemical. However, zero level may not be attainable at the present time. Therefore, the levels which may result in incremental increase of cancer risk, over the lifetimes are estimated at 10^{-5}, 10^{-6}, and 10^{-7}. The corresponding criteria are 123 ng/l, 12.3 ng/l, and 1.23 ng/l, respectively. If the above estimates are made for consumption of aquatic organisms only, excluding consumption of water, the levels are 414 ng/l, 41.4 ng/l, and 4.14 ng/l, respectively. Other concentrations representing different risk levels may be calculated by use of the Guidelines. The risk estimate range is presented for information purposes and does not represent an Agency judgment on an "acceptable" risk level.

For the maximum protection of human health from the potential carcinogenic effects due to exposure of gamma-HCH through ingestion of contaminated water and contaminated aquatic organisms, the ambient water concentrations should be zero based on the non-threshold assumption for this chemical. However, zero level may not be attainable at the present time. Therefore, the levels which may result in incremental increase of cancer risk over the lifetime are estimated at 10^{-5}, 10^{-6}, and 10^{-7}. The corresponding criteria are 186 ng/l, 18.6 ng/l, and 1.86 ng/l, respectively. If the above estimates are made for consumption of aquatic organisms only, excluding consumption of water, the levels are 625 ng/l, 62.5 ng/l, 6.25 ng/l, respectively. Other concentrations representing different risk levels may be calculated by use of the Guidelines. The risk estimate range is presented for information purposes and does not represent an Agency judgment on an "acceptable" risk level.

Using the present guidelines, a satisfactory criterion cannot be derived at this time due to the insufficiency in the available data for delta-HCH.

Using the present guidelines, a satisfactory criterion cannot be derived at this time due to the insufficiency in the available data for epsilon-HCH.

Hexachlorocyclopentadiene

Freshwater Aquatic Life

The available data for hexachlorocyclopentadiene indicate that acute and chronic toxicity to freshwater aquatic life occurs at concentrations as low as 7.0 and 5.2 μg/l, respectively, and would occur at lower concentrations among species that are more sensitive than those tested.

Saltwater Aquatic Life

The available data to hexachlorocyclopentadiene indicate that acute toxicity to saltwater aquatic life occurs at concentrations as low as 7.0 μg/l and would occur at lower concentrations among species that are more sensitive than those tested. No data are available concerning the chronic toxicity of hexachlorocyclopentadiene to sensitive saltwater aquatic life.

Human Health

For comparison purposes, two approaches were used to derive criterion levels for hexachlorocyclopentadiene. Based on available toxicity data, for the protection of public health, the derived level is 206 μg/l. Using available organoleptic data, for controlling undesirable taste and odor quality of ambient water, the estimated level is 1.0 μg/l. It should be recognized that organoleptic data as a basis for establishing a water quality criterion have limitations and have no demonstrated relationship to potential adverse human health effects.

Isophorone

Freshwater Aquatic Life

The available data for isophorone indicate that acute toxicity to freshwater aquatic life ocurs at concentrations as low as 117,000 μg/l and would occur at lower concentrations among species that are more sensitive than those tested. No data are available concerning the chronic toxicity of isophorone to sensitive freshwater aquatic life.

Saltwater Aquatic Life

The available data for isophorone indicate that acute toxicity to saltwater aquatic life occurs at concentrations as low as 12,900 μg/l and would occur at lower concentrations among species that are more sensitive than those tested. No data are available concerning the chronic toxicity of isophorone to sensitive saltwater aquatic life.

Human Health

For the protection of human health from the toxic properties of isophorone ingested through water and contaminated aquatic organisms, the ambient water criterion is determined to be 5.2 mg/l.

For the protection of human health from the toxic properties of isophorone ingested through contaminated aquatic organisms alone, the ambient water criterion is determined to be 520 mg/l.

Lead

Freshwater Aquatic Life

For total recoverable lead the criterion (in μg/l) to protect freshwater aquatic life as derived using the Guidelines is the numerical value given by e(2.35[ln(hardness)]-9.48) as a 24-hour average and the concentration (in μg/l) should not exceed the numerical value given by e(1.22[ln(hardness)]-0.47) at any time. For example, at hardnesses of 50, 100, and 200 mg/l as $CaCO_3$ the criteria are 0.75, 3.8, and 20 μg/l, respectively, as 24-hour averages, and the concentrations should not exceed 74, 170, and 400 μg/l, respectively, at any time.

Saltwater Aquatic Life

The available data for total recoverable lead indicate that acute and chronic toxicity to saltwater aquatic life occur at concentrations as low as 668 and 25 μg/l, respectively, and would occur at lower concentrations among species that are more sensitive than those tested.

Human Health

The ambient water quality criterion for lead is recommended to be identical to the existing drinking water standard which is 50 μg/l. Analysis of the toxic effects data resulted in a calculated level which is protective to human health against the ingestion of contaminated water and contaminated aquatic organisms. The calculated value is comparable to the present standard. For this reason a selective criterion based on exposure solely from consumption of 6.5 grams of aquatic organisms was not derived.

Mercury

Freshwater Aquatic Life

For total recoverable mercury the criterion to protect freshwater aquatic life as derived using the Guidelines is 0.00057 μg/l as a 24-hour average and the concentration should not exceed 0.0017 μg/l at any time.

Saltwater Aquatic Life

For total recoverable mercury the criterion to protect saltwater aquatic life as derived using the Guidelines is 0.025 μg/l as a 24-hour average and the concentration should not exceed 3.7 μg/l at any time.

Human Health

For the protection of human health from the toxic properties of mercury

ingested through water and contaminated aquatic organisms, the ambient water criterion is determined to be 144 ng/l.

For the protection of human health from the toxic properties of mercury ingested through contaminated aquatic organisms alone, the ambient water criterion is determined to be 146 ng/l.

Note.—These values include the consumption of freshwater, estuarine, and marine species.

Naphthalene

Freshwater Aquatic Life

The available data to naphthalene indicate that acute and chronic toxicity to freshwater aquatic life occur at concentrations as low as 2,300 and 620 μg/l, respectively, and would occur at lower concentrations among species that are more sensitive than those tested.

Saltwater Aquatic Life

The available data for naphthalene indicate that acute toxicity to saltwater aquatic life occurs at concentrations as low as 2,350 μg/l and would occur at lower concentrations among species that are more sensitive than those tested. No data are available concerning the chronic toxicity of naphthalene to sensitive saltwater aquatic life.

Human Health

Using the present guidelines, a satisfactory criterion cannot be derived at this time due to the insufficiency in the available data for naphthalene.

Nickel

Freshwater Aquatic Life

For total recoverable nickel the criterion (in μg/l) to protect freshwater aquatic life as derived using the Guidelines is the numerical value given by e(0.76 [ln (hardness)] +1.06) as a 24-hour average and the concentration (in μg/l) should not exceed the numerical value given by e(0.76[ln (hardness)] + 4.02) at any time. For example, at hardnesses of 50, 100, and 200 mg/l as $CaCO_3$ the criteria are 56, 96, and 160 μg/l, respectively, as 24-hour averages, and the concentrations should not exceed 1,100, 1,800, and 3,100 μg/l, respectively, at any time.

Saltwater Aquatic Life

For total recoverable nickel the criterion to protect saltwater aquatic life as derived using the Guidelines is 7.1 μg/l as a 24-hour average and the concentration should not exceed 140 μg/l at any time.

Human Health

For the protection of human health from the toxic properties of nickel ingested through water and contaminated aquatic organisms, the ambient water criterion is determined to be 13.4 μg/l.

For the protection of human health from the toxic properties of nickel ingested through contaminated aquatic organisms alone, the ambient water criterion is determined to be 100 μg/l.

Nitrobenzene

Freshwater Aquatic Life

The available data for nitrobenzene indicate that acute toxicity to freshwater aquatic life occurs at concentrations as low as 27,000 μg/l and would occur at lower concentrations among species that are more sensitive than those tested. No definitive data are available concerning the chronic toxicity of nitrobenzene to sensitive freshwater aquatic life.

Saltwater Aquatic Life

The available data for nitrobenzene indicate that acute toxicity to saltwater aquatic life occurs at concentrations as low as 6,680 μg/l and would occur at lower concentrations among species that are more sensitive than those tested. No data are available concerning the chronic toxicity of nitrobenzene to sensitive saltwater aquatic life.

Human Health

For comparison purposes, two approaches were used to derive criterion levels for nitrobenzene. Based on available toxicity data, for the protection of public health, the derived level is 19.8 mg/l. Using available organoleptic data, for controlling undesirable taste and odor quality of ambient water, the estimated level is 30 μg/l. It should be recognized that organoleptic data as a basis for establishing a water quality criteria have limitations and have no demonstrated relationship to potential adverse human health effects.

Nitrophenols

Freshwater Aquatic Life

The available data for nitrophenols indicate that acute toxicity to freshwater aquatic life occurs at concentrations as low as 230 μg/l and would occur at lower concentrations among species that are more sensitive than those tested. No data are available concerning the chronic toxicity of nitrophenols to sensitive freshwater aquatic life but toxicity to one species of algae occurs at concentrations as low as 150 μg/l.

Saltwater Aquatic Life

The available data for nitrophenols indicate that acute toxicity to saltwater aquatic life occurs at concentrations as low as 4,850 μg/l and would occur at lower concentrations among species that are more sensitive than those tested. No data are available concerning the chronic toxicity of nitrophenols to sensitive saltwater aquatic life.

Human Health

For the protection of human health from the toxic properties of 2,4-dinitro-o-cresol ingested through water and contaminated aquatic organisms, the ambient water criterion is determined to be 13.4 μg/l.

For the protection of human health from the toxic properties of 2,4-dinitro-o-cresol ingested through contaminated aquatic organisms alone, the ambient water criterion is determined to be 765 μg/l.

For the protection of human health from the toxic properties of dinitrophenol ingested through water and contaminated aquatic organisms, the ambient water criterion is determined to be 70 μg/l.

For the protection of human health from the toxic properties of dinitrophenol ingested through contaminated aquatic organisms alone, the ambient water criterion is determined to be 14.3 mg/l.

Using the present guidelines, a satisfactory criterion cannot be derived at this time due to the insufficiency in the available data for mononitrophenol.

Using the present guidelines, a satisfactory criterion cannot be derived at this time due to the insufficiency in the available data for tri-nitrophenol.

Nitrosamines

Freshwater Aquatic Life

The available data for nitrosamines indicate that acute toxicity to freshwater aquatic life occurs at concentrations as low as 5,850 μg/l and would occur at lower concentrations among species that are more sensitive than those tested. No data are available concerning the chronic toxicity of nitrosamines to sensitive freshwater aquatic life.

Saltwater Aquatic Life

The available data for nitrosamines indicate that acute toxicity to saltwater aquatic life occurs at concentrations as low as 3,300,000 μg/l and would occur at lower concentrations among species that are more sensitive than those tested. No data are available concerning the chronic toxicity of nitrosamines to sensitive saltwater aquatic life.

Human Health

For the maximum protection of human health from the potential carcinogenic effects due to exposure of n-nitrosodimethylamine through ingestion of contaminated water and contaminated aquatic organisms, the ambient water concentration should be zero based on the non-threshold assumption for this chemical. However, zero level may not be attainable at the present time. Therefore, the levels which may result in incremental increase of cancer risk, over the lifetimes are estimated at 10^{-5}, 10^{-6}, and 10^{-7}. The corresponding criteria are 14 ng/l, 1.4 ng/l, and .14 ng/l, respectively. If the above estimates are made for consumption of aquatic organisms only, excluding consumption of water, the levels are 160,000 ng/l, 16,000 ng/l, and 1,600 ng/l, respectively. Other concentrations representing different risk levels may be calculated by use of the Guidelines. The risk estimate range is presented for information purposes and does not represent an Agency judgment on an "acceptable" risk level.

For the maximum protection of human health from the potential carcinogenic effects due to exposure of n-nitrosodiethylamine through ingestion of contaminated water and contaminated aquatic organisms, the ambient water concentration should be zero based on the non-threshold assumption for this chemical. However, zero level may not be attainable at the present time. Therefore, the levels which may result in incremental increase of cancer risk, over the lifetimes are estimated at 10^{-5}, 10^{-6}, and 10^{-7}. The corresponding criteria are 8 ng/l, 0.8 ng/l, and 0.08 ng/l, respectively. If the above estimates are made for consumption of aquatic organisms only, excluding consumption of water, the levels are 12,400 ng/l, 1,240 ng/l, and 124 ng/l, respectively. Other concentrations representing different risk levels may be calculated by use of the Guidelines. The risk estimate range is presented for information purposes and does not represent an Agency judgment on an "acceptable" risk level.

For the maximum protection of human health from the potential carcinogenic effects due to exposure in n-nitrosodi-n-butylamine through ingestion of contaminated water and contaminated aquatic organisms, the ambient water concentration should be zero based on the non-threshold assumption for this chemical. However, zero level may not be attainable at the present time. Therefore, the levels which may result in incremental increase of cancer risk, over the lifetimes are estimated at 10^{-5}, 10^{-6}, and 10^{-7}. The corresponding criteria are 64 ng/l 6.4 ng/l and .064 ng/l, respectively. If the above estimates are made for consumption of aquatic organisms only, excluding consumption of water, the levels are 5,868 ng/l, 587 ng/l, and 58.7 ng/l, respectively. Other concentrations representing different risk levels may be calculated by use of the Guidelines. The risk estimate range is presented for information purposes and does not represent an Agency judgment on an "acceptable" risk level.

For the maximum protection of human health from the potential carcinogenic effects due to exposure in n-nitrosodiphenylamine through ingestion of contaminated water and contaminated aquatic organisms, the ambient water concentration should be zero based on the non-threshold assumption for this chemical. However, zero level may not be attainable at the present time. Therefore, the levels which may result in incremental increase of cancer risk, over the lifetimes are estimated at 10^{-5}, 10^{-6}, and 10^{-7}. The corresponding criteria are 49,000 ng/l 4,900 ng/l and 490 ng/l, respectively. If the above estimates are made for consumption of aquatic organisms only, excluding consumption of water, the levels are 161,000 ng/l, 16,100 ng/l, and 1,610 ng/l, respectively. Other concentrations representing different risk levels may be calculated by use of the Guidelines. The risk estimate range is presented for information purposes and does not represent an Agency judgment on an "acceptable" risk level.

For the maximum protection of human health from the potential carcinogenic effects due to exposure in n-nitrosopyrrolidine through ingestion of contaminated water and contaminated aquatic organisms, the ambient water concentration should be zero based on the non-threshold assumption for this chemical. However, zero level may not be attainable at the present time. Therefore, the levels which may result in incremental increase of cancer risk, over the lifetimes are estimated at 10^{-5}, 10^{-6}, and 10^{-7}. The corresponding criteria are 160 ng/l 16.0 ng/l and 1.60 ng/l, respectively. If the above estimates are made for consumption of aquatic organisms only, excluding consumption of water, the levels are 919,000 ng/l, 91,900 ng/l, and 9,190 ng/l, respectively. Other concentrations representing different risk levels may be calculated by use of the Guidelines. The risk estimate range is presented for information purposes and does not represent an Agency judgment on an "acceptable" risk level.

Pentachlorophenol

Freshwater Aquatic Life

The available data for pentachlorophenol indicate that acute and chronic toxicity to freshwater aquatic life occur at concentrations as low as 55 and 3.2 μg/l, respectively, and would occur at lower concentrations among species that are more sensitive than those tested.

Saltwater Aquatic Life

The available data for pentachlorophenol indicate that acute and chronic toxicity to saltwater aquatic life occur at concentrations as low as 53 and 34 μg/l, respectively, and would occur at lower concentrations among species that are more sensitive than those tested.

Human Health

For comparison purposes, two approaches were used to derive criterion levels for pentachlorophenol. Based on available toxicity data, for the protection of public health, the derived level is 1.01 mg/l. Using available organoleptic data, for controlling undesirable taste and odor quality of ambient water, the estimated level is 30 μg/l. It should be recognized that organoleptic data as a basis for establishing a water quality criterion have limitations and have no demonstrated relationship to potential adverse human health effects.

Phenol

Freshwater Aquatic Life

The available data for phenol indicate that acute and chronic toxicity to freshwater aquatic life occur at concentrations as low as 10,200 and 2,560 μg/l, respectively, and would occur at lower concentrations among species that are more sensitive than those tested.

Saltwater Aquatic Life

The available data for phenol indicate that acute toxicity to saltwater aquatic life occurs at concentrations as low as 5,800 ug/l and would occur at lower concentrations among species that are more sensitive than those tested. No data are available concerning the chronic toxicity of phenol to sensitive saltwater aquatic life.

Human Health

For comparison purposes, two approaches were used to derive criterion levels for phenol. Based on available toxicity data, for the protection of public health, the derived level is 3.5 mg/l. Using available organoleptic data, for controlling

undesirable taste and odor quality of ambient water, the estimated level is 0.3 mg/l. It should be recognized that organoleptic data as a basis for establishing a water quality criterion have limitations and have no demonstrated relationship to potential adverse human health effects.

Phthalate Esters

Freshwater Aquatic Life

The available data for phthalate esters indicate that acute and chronic toxicity to freshwater aquatic life occur at concentrations as low as 940 and 3 μg/l, respectively, and would occur at lower concentrations among species that are more sensitive than those tested.

Saltwater Aquatic Life

The available data for phthalate esters indicate that acute toxicity to saltwater aquatic life occurs at concentrations as low as 2944 μg/l and would occur at lower concentrations among species that are more sensitive than those tested. No data are available concerning the chronic toxicity of phthalate esters to sensitive saltwater aquatic life but toxicity to one species of algae occurs at concentrations as low as 3.4 μg/l.

Human Health

For the protection of human health from the toxic properties of dimethylphthalate ingested through water and contaminated aquatic organisms, the ambient water criterion is determined to be 313 mg/l.

For the protection of human health from the toxic properties of dimethylphthalate ingested through contaminated aquatic organisms alone, the ambient water criterion is determined to be 2.9 g/l.

For the protection of human health from the toxic properties of diethylphthalate ingested through water and contaminated aquatic organisms, the ambient water criterion is determined to be 350 mg/l.

For the protection of human health from the toxic properties of diethylphthalate ingested through contaminated aquatic organisms alone, the ambient water criterion is determined to be 1.8 g/l.

For the protection of human health from the toxic properties of dibutylphthalate ingested through water and contaminated aquatic organisms, the ambient water criterion is determined to be 34 mg/l.

For the protection of human health from the toxic properties of dibutylphthalate ingested through contaminated aquatic organisms alone, the ambient water criterion is determined to be 154 mg/l.

For the protection of human health from the toxic properties of di-2-ethylhexyl-phthalate ingested through water and contaminated aquatic organisms, the ambient water criterion is determined to be 15 mg/l.

For the protection of human health from the toxic properties of di-2-ethylhexyl-phthalate ingested through contaminated aquatic organisms alone, the ambient water criterion is determined to be 50 mg/l.

Polychlorinated Biphenyls

Freshwater Aquatic Life

For polychlorinated biphenyls the criterion to protect freshwater aquatic life as derived using the Guidelines is 0.014 μg/l as a 24-hour average. The available data indicate that acute toxicity to freshwater aquatic life probably will only occur at concentrations above 2.0 μg/l and that the 24-hour average should provide adequate protection against acute toxicity.

Saltwater Aquatic Live

For polychlorinated biphenyls the criterion to protect saltwater aquatic life as derived using the Guidelines is 0.030 μg/l as a 24-hour average. The available data indicate that acute toxicity to saltwater aquatic life probably will only occur at concentrations above 10 μg/l and that the 24-hour average should provide adequate protection against acute toxicity.

Human Health

For the maximum protection of human health from the potential carcinogenic effects due to exposure of PCBs through ingestion of contaminated water and contaminated aquatic organisms, the ambient water concentration should be zero based on the non-threshold assumption for this chemical. However, zero level may not be attainable at the present time. Therefore, the levels which may result in incremental increase of cancer risk over the lifetime are estimated at 10^{-5}, 10^{-6}, and 10^{-7}. The corresponding criteria are .79 ng/l, 0.79 ng/l, and .0079 ng/l, respectively. If the above estimates are made for consumption of aquatic organisms only, excluding consumption of water, the levels are .79 ng/l, .079 ng/l, and .0079 ng/l, respectively. Other concentrations representing different risk levels may be calculated by use of the Guidelines. The risk estimate range is presented for information purposes and does not represent an Agency judgment on an "acceptable" risk level.

Polynuclear Aromatic Hydrocarbons (PAHs)

Freshwater Aquatic Life

The limited freshwater data base available for polynuclear aromatic hydrocarbons, mostly from short-term bioconcentration studies with two compounds, does not permit a statement concerning acute or chronic toxicity.

Saltwater Aquatic Life

The available data for polynuclear aromatic hydrocarbons indicate that acute toxicity to saltwater aquatic life occurs at concentrations as low as 300 ug/l and would occur at lower concentrations among species that are more sensitive than those tested. No data are available concerning the chronic toxicity of polynuclear aromatic hydrocarbons to sensitive saltwater aquatic life.

Human Health

For the maximum protection of human health from the potential carcinogenic effects due to exposure of PAHs through ingestion of contaminated water and contaminated aquatic organisms, the ambient water concentration should be zero based on the non-threshold assumption for this chemical. However, zero level may not be attainable at the present time. Therefore, the levels which may result in incremental increase of cancer risk over the lifetime are estimated at 10^{-5}, 10^{-6}, and 10^{-7}. The corresponding criteria are 28 ng/l, 2.8 ng/l, and .28 ng/l, respectively. If the above estimates are made for consumption of aquatic organisms only, excluding consumption of water, the levels are 311 ng/l, 31.1 ng/l, and 3.11 ng/l, respectively. Other concentrations representing different risk levels may be calculated by use of the Guidelines. The risk estimate range is presented for information purposes and does not represent an Agency judgment on an "acceptable" risk level.

Selenium

Freshwater Aquatic Life

For total recoverable inorganic selenite the criterion to protect freshwater aquatic life as derived using the Guidelines is 35 μg/l as a 24-hour average and the concentration should not exceed 260 μg/l at any time.

The available data for inorganic selenate indicate that acute toxicity to freshwater aquatic life occurs at concentrations as low as 760 μg/l and would occur at lower concentrations among species that are more sensitive

than those tested. No data are available concerning the chronic toxicity of inorganic selenate to sensitive freshwater aquatic life.

Saltwater Aquatic Life

For total recoverable inorganic selenite the criterion to protect saltwater aquatic life as derived using the Guidelines is 54 μg/l as a 24-hour average and the concentration should not exceed 410 μg/l at any time.

No data are available concerning the toxicity of inorganic selenate to saltwater aquatic life.

Human Health

The ambient water quality criterion for selenium is recommended to be identical to the existing drinking water standard which is 10 μg/l. Analysis of the toxic effects data resulted in a calculated level which is protective of human health against the ingestion of contaminated water and contaminated aquatic organisms. The calculated value is comparable to the present standard. For this reason a selective criterion based on exposure solely from consumption of 6.5 grams of aquatic organisms was not derived.

Silver

Freshwater Aquatic Life

For freshwater aquatic life the concentration (in μg/l) of total recoverable silver should not exceed the numerical value given by "e[1.72(ln (hardness)-6.52)]" at any time. For example, at hardnesses of 50, 100, 200 mg/l as $CaCO_3$ the concentration of total recoverable silver should not exceed 1.2, 4.1, and 13 μg/l, respectively, at any time. The available data indicate that chronic toxicity to freshwater aquatic life may occur at concentrations as low as 0.12 μg/l.

Saltwater Aquatic Life

For saltwater aquatic life the concentration of total recoverable silver should not exceed 2.3 μg/l at any time. No data are available concerning the chronic toxicity of silver to sensitive saltwater aquatic life.

Human Health

The ambient water quality criterion for silver is recommended to be identical to the existing drinking water standard which is 50 μg/l. Analysis of the toxic effects data resulted in a calculated level which is protective of human health against the ingestion of contaminated water and contaminated aquatic organisms. The calculated value is comparable to the present standard. For this reason a selective criterion based on exposure solely from consumption of 6.5 grams of aquatic organisms was not derived.

Tetrachloroethylene

Freshwater Aquatic Life

The available data for tetrachloroethylene indicate that acute and chronic toxicity to freshwater aquatic life occur at concentrations as low as 5,280 and 840 μg/l, respectively, and would occur at lower concentrations among species that are more sensitive than those tested.

Saltwater Aquatic Life

The available data for tetrachloroethylene indicate that acute and chronic toxicity to saltwater aquatic life occur at concentrations low as 10,200 and 450 μg/l, respectively, and would occur at lower concentrations among species that are more sensitive than those tested.

Human Health

For the maximum protection of human health from the potential carcinogenic effects due to exposure of tetrachloroethylene through ingestion of contaminated water and contaminated aquatic organisms, the ambient water concentration should be zero based on the non-threshold assumption for this chemical. However, zero level may not be attainable at the present time. Therefore, the levels which may result in incremental increase of cancer risk over the lifetime are estimated at 10^{-5}, 10^{-6}, and 10^{-7}. The corresponding criteria are 8 μg/l, .8 μg/l, and .08 μg/l, respectively. If the above estimates are made for consumption of aquatic organisms only, excluding consumption of water, the levels are 88.5 μg/l, 8.85 μg/l, and .88 μg/l, respectively. Other concentrations representing different risk levels may be calculated by use of the Guidelines. The risk estimate range is presented for information purposes and does not represent an Agency judgment on an "acceptable" risk level.

Thallium

Freshwater Aquatic Life

The available data for thallium indicate that acute and chronic toxicity to freshwater aquatic life occur at concentrations as low as 1,400 and 40 μg/l, respectively, and would occur at lower concentrations among species that are more sensitive than those tested. Toxicity to one species of fish occurs at concentrations as low as 20 μg/l after 2,600 hours of exposure.

Saltwater Aquatic Life

The available data for thallium indicate that acute toxicity to saltwater aquatic life occurs at concentrations as low as 2,130 μg/l and would occur at lower concentrations among species that are more sensitive than those tested. No data are available concerning the chronic toxicity of thallium to sensitive saltwater aquatic life.

Human Health

For the protection of human health from the toxic properties of thallium ingested through water and contaminated aquatic organisms, the ambient water criterion is determined to be 13 μg/l.

For the protection of human health from the toxic properties of thallium ingested through contaminated aquatic organisms alone, the ambient water criterion is determined to be 48 μg/l.

Toluene

Freshwater Aquatic Life

The available data for toluene indicate that acute toxicity to freshwater aquatic life occurs at concentrations as low as 17,500 μg/l and would occur at lower concentrations among species that are more sensitive than those tested. No data are available concerning the chronic toxicity of toluene to sensitive freshwater aquatic life.

Saltwater Aquatic Life

The available data for toluene indicate that acute and chronic toxicity to saltwater aquatic life occur at concentrations as low as 6,300 and 5,000 μg/l, respectively, and would occur at lower concentrations among species that are more sensitive than those tested.

Human Health

For the protection of human health from the toxic properties of toluene ingested through water and contaminated aquatic organisms, the ambient water criterion is determined to be 14.3 mg/l.

For the protection of human health from the toxic properties of toluene ingested through contaminated aquatic organisms alone, the ambient water criterion is determined to be 424 mg/l.

Toxaphene

Freshwater Aquatic Life

For toxaphene the criterion to protect freshwater aquatic life as derived using the Guidelines is 0.013 μg/l as a 24-hour average and the concentration should not exceed 1.6 μg/l at any time.

Saltwater Aquatic Life

For saltwater aquatic life the concentration of toxaphene should not exceed 0.070 μg/l at any time. No data

are available concerning the chronic toxicity of toxaphene to sensitive saltwater aquatic life.

Human Health

For the maximum protection of human health from the potential carcinogenic effects due to exposure of toxaphene through ingestion of contaminated water and contaminated aquatic organisms, the ambient water concentration should be zero based on the non-threshold assumption for this chemical. However, zero level may not be attainable at the present time. Therefore, the levels which may result in incremental increase of cancer risk over the lifetime are estimated at 10^{-5}, 10^{-6}, and 10^{-7}. The corresponding criteria are 7.1 ng/l, .71 ng/l, and .07 ng/l, respectively. If the above estimates are made for consumption of aquatic organisms only, excluding consumption of water, the levels are 7.3 ng/l, .73 ng/l, and .07 ng/l, respectively. Other concentrations representing different risk levels may be calculated by use of the Guidelines. The risk estimate range is presented for information purposes and does not represent an Agency judgment on an "acceptable" risk level.

Trichloroethylene

Freshwater Aquatic Life

The available data for trichloroethylene indicate that acute toxicity to freshwater aquatic life occurs at concentrations as low as 45,000 μg/l and would occur at lower concentrations among species that are more sensitive than those tested. No data are available concerning the chronic toxicity of trichloroethylene to sensitive freshwater aquatic life but adverse behavioral effects occurs to one species at concentrations as low as 21,900 μg/l.

Saltwater Aquatic Life

The available data for trichloroethylene indicate that acute toxicity to saltwater aquatic life occurs at concentrations as low as 2,000 μg/l and would occur at lower concentrations among species that are more sensitive than those tested. No data are available concerning the chronic toxicity of trichloroethylene to sensitive saltwater aquatic life.

Human Health

For the maximum protection of human health from the potential carcinogenic effects due to exposure of trichloroethylene through ingestion of contaminated water and contaminated aquatic organisms, the ambient water concentration should be zero based on the non-threshold assumption for this chemical. However, zero level may not be attainable at the present time. Therefore, the levels which may result in incremental increase of cancer risk over the lifetime are estimated at 10^{-5}, 10^{-6}, and 10^{-7}. The corresponding criteria are 27 μg/l, 2.7 μg/l, and .27 μg/l, respectively. If the above estimates are made for consumption of aquatic organisms only, excluding consumption of water, the levels are 807 μg/l, 80.7 μg/l, and 8.07 μg/l, respectively. Other concentrations representing different risk levels may be calculated by use of the Guidelines. The risk estimate range is presented for information purposes and does not represent an Agency judgment on an "acceptable" risk level.

Vinyl Chloride

Freshwater Aquatic Life

No freshwater organisms have been tested with vinyl chloride and no statement can be made concerning acute or chronic toxicity.

Saltwater Aquatic Life

No saltwater organisms have been tested with vinyl chloride and no statement can be made concerning acute or chronic toxicity.

Human Health

For the maximum protection of human health from the potential carcinogenic effects due to exposure of vinyl chloride through ingestion of contaminated water and contaminated aquatic organisms, the ambient water concentration should be zero based on the non-threshold assumption for this chemical. However, zero level may not be attainable at the present time. Therefore, the levels which may result in incremental increase of cancer risk over the lifetime are estimated at 10^{-5}, 10^{-6}, and 10^{-7}. The corresponding criteria are 20 μg/l, 2.0 μg/l, and .2 μg/l, respectively. If the above estimates are made for consumption of aquatic organisms only, excluding consumption of water, the levels are 5,246 μg/l, 525 μg/l, and 52.5 μg/l, respectively. Other concentrations representing different risk levels may be calculated by use of the Guidelines. The risk estimate range is presented for information purposes and does not represent an Agency judgment on an "acceptable" risk level.

Zinc

Freshwater Aquatic Life

For total recoverable zinc the criterion to protect freshwater aquatic life as derived using the Guidelines is 47 μg/l as a 24-hour average and the concentration (in μg/l) should not exceed the numerical value given by $e^{(0.83[\ln(\text{hardness})] + 1.99)}$ at any time. For example, at hardnesses of 50, 100, and 200 mg/l as $CaCO_3$ the concentration of total recoverable zinc should not exceed 180, 320, and 570 μg/l at any time.

Saltwater Aquatic Life

For total recoverable zinc the criterion to protect saltwater aquatic life as derived using the Guidelines is 58 μg/l as a 24-hour average and the concentration should not exceed 170 μg/l at any time.

Human Health

Sufficient data is not available for zinc to derive a level which would protect against the potential toxicity of this compound. Using available organoleptic data, for controlling undesirable taste and odor quality of ambient water, the estimated level is 5 mg/l. It should be recognized that organoleptic data as a basis for establishing a water quality criteria have limitations and have not demonstrated relationship to potential adverse human health effects.

Appendix B—Guidelines for Deriving Water Quality Criteria for the Protection of Aquatic Life and Its Uses

Introduction

This version of the Guidelines provides clarifications, additional details, and technical and editorial changes in the last version published in the Federal Register [44 FR 15970 (March 15, 1979)]. This version incorporates changes resulting from comments on previous versions and from experience gained during U.S. EPA's use of the previous versions. Future versions of the Guidelines will incorporate new ideas and data as their usefulness is demonstrated.

Criteria may be expressed in several forms. The numerical form is commonly used, but descriptive and procedural forms can be used if numerical criteria are not possible or desirable. The purpose of these Guidelines is to describe an objective, internally consistent and appropriate way of deriving numerical water quality criteria for the protection of the uses of, as well as the presence of, aquatic organisms.

A numerical criterion might be thought of as an estimate of the highest concentration of a substance in water which does not present a significant risk to the aquatic organisms in the water and their uses. Thus the Guidelines are intended to derive criteria which will protect aquatic communities by protecting most of the species and their uses most of the time, but not

necessarily all of the species all of the time. Aquatic communities can tolerate some stress and occasional adverse effects on a few species, and so total protection of all of the species all of the time is not necessary. Rather, the Guidelines attempt to provide a reasonable and adequate amount of protection with only a small possibility of considerable overprotection or underprotection. Within these constraints, it seems appropriate to err on the side of overprotection.

The numerical aquatic life criteria derived using the Guidelines are expressed as two numbers, rather than the traditional one number, so that the criteria can more accurately reflect toxicological and practical realities. The combination of both a maximum value and a 24-hour average value is designed to provide adequate protection of aquatic life and its uses from acute and chronic toxicity to animals, toxicity to plants and bioconcentration by aquatic organisms without being as restrictive as a one-number criterion would have to be to provide the same amout of protection. The only way to assure the same degree of protection with a one-number criterion would be to use the 24-hour average as a concentration that is not to be exceeded at any time in any place.

The two-number criterion is intended to identify an average pollutant concentration which will produce a water qualtiy generally suited to the maintenance of aquatic life and its uses while restricting the extent and duration of excursions over the average so that the total exposure will not cause unacceptable adverse effects. Merely specifying an average value over a time period is insufficient, unless the period of time is rather short, because of concentration higher than the average value can kill or cause substantial damage in short periods. Furthermore, for some substances the effect of intermittent high exposures is cumulative. It is therefore necessary to place an upper limit on pollutant concentrations to which aquatic organisms might be exposed, especially when the maximum value is not much higher than the average value. For some substances the maximum may be so much higher than the 24-hour average that in any real-world situation the maximum will never be reached if the 24-hour average is achieved. In such cases the 24-hour average will be limiting and the maximum will have no practical significance, except to indicate that elevated concentrations are acceptable as long as the 24-hour average is achieved.

These Guidelines have been developed on the assumption that the results of laboratory tests are generally useful for predicting what will happen in field situations. The resulting criteria are meant to apply to most bodies of water in the United States, except for the Great Salt Lake. All aquatic organisms and their common uses are meant to be considered, but not necessarily protected, if relevant data are available, with at least one specific exception. This exception is the accumulation of residues of organic compounds in the siscowet subspecies of lake trout which occurs in Lake Superior and contains up to 67% fat in the fillets (Thurston, C.E., 1962, Physical Characteristics and Chemical Composition of Two Subspecies of Lake Trout, J. Fish. Res. Bd. Canada 19:39–44). Neither siscowet nor organisms in the Great Salt Lake are intentionally protected by these Guidelines because both may be too atypical.

With appropriate modifications these Guidelines can be used to derive criteria for any specified geographical area, body of water (such as the Great Salt Lake), or group of similar bodies of water. Thus with appropriate modifications the Guidelines can be used to derive national, state, or local criteria if adequate information is available concerning the effects of the substance of concern on appropriate species and their uses. However, the basic concepts described in the Guidelines should be modified only when sound scientific evidence indicates that a criterion produced using the Guidelines would probably significantly overprotect or underprotect the presence or uses of aquatic life.

Criteria produced by these Guidelines are not enforceable numbers. They may be used in developing enforceable numbers, such as water quality standards and effluent standards. However, the development of standards may take into account additional factors such as social, legal, economic, and hydrological considerations, the environmental and analytical chemistry of the substance, the extrapolation from laboratory data to field situations, and the relationship between the species for which data are available and the species which are to be protected.

Because fresh water and salt water (including both estuarine and marine waters) have basically different chemical compositions and because freshwater and saltwater species rarely inhabit the same water simultaneously, separate criteria should be derived for these two kinds of waters. However, for some substances sufficient data may not be available to allow derivation of one or both of these criteria using the Guidelines.

These Guidelines are meant to be used after a decision is made that a criterion is needed for a substance. The Guidelines do not address the rationale for making that decision. If the potential for adverse effects on aquatic life and its uses are part of the basis for deciding whether or not a criterion is needed for a substance, these Guidelines may be helpful in the collection and interpretation of relevant data.

I. Define the Substance for Which the Criterion Is To Be Derived

A. Each separate chemical which would not ionize significantly in most natural bodies of water should usually be considered a separate substance, except possibly for structurally similar organic compounds that only differ in the number and location of atoms of a specific halogen, and only exist in large quantities as commercial mixtures of the various compounds, and apparently have similar chemical, biological, and toxicological properties.

B. For chemicals, which would ionize significantly in most natural bodies of water, such as inorganic salts, organic acids and phenols, all forms that would be in chemical equilibrium should usually be considered one substance. For metals, each different valence and each different covalently bonded organometallic compound should usually be considered a separate substance.

C. The definition of the substance may also need to take into account the analytical chemistry and fate of the substance.

II. Collect and Review Available Data

A. Collect all available data on the substance concerning (1) toxicity to, and bioaccumulation by, aquatic animals and plants, (2) FDA action levels, and (3) chronic feeding studies with wildlife.

B. Discard all data that are not available in hard copy (publication, manuscript, letter, memorandum, etc.) with enough supporting information to indicate that acceptable test procedures were used and that the results are reliable. Do not assume that all published data are acceptable.

C. Discard questionable data. For example, discard data from tests for which no control treatment existed, in which too many organisms in the control treatment died or showed signs of stress or disease, or in which distilled or deionized water was used as the dilution water for aquatic organisms. Discard data on formulated mixtures and emulsifiable concentrates of the

substance of concern, but not necessarily data on technical grade material.

D. Do not use data obtained using:

1. Brine shrimp, because they usually only occur naturally in water with salinity greater than 35 g/kg.

2. Species that do not have reproducing wild populations resident in—but not necessarily native to—North America. Resident North American species of fishes are defined as those listed in "A List of Common and Scientific Names of Fishes from the United States and Canada", 3rd ed., Special Publication No. 6, American Fisheries Society, Washington, D.C., 1970. Data obtained with non-resident species can be used to indicate relationships and possible problem areas, but cannot be used in the derivation of criteria.

3. Organisms that were previously exposed to significant concentrations of the test material or other pollutants.

III. Minimum Data Base

A. A minimum amount of data should be available to help ensure that each of the four major kinds of possible adverse effects receives some consideration. Results of acute and chronic toxicity tests with a reasonable number and variety of aquatic animals are necessary so that data available for tested species can be considered a useful indication of the sensitivities of the numerous untested species. The requiurements concerning toxicity to aquatic plants are less stringent because procedures for conducting tests with plants are not as well developed and the interpretation of the results is more questionable. Data concerning bioconcentration by aquatic organisms can only be used if other relevant data are available.

B. To derive a criterion for freshwater aquatic life, the following should be available:

1. Acute tests (see Section IV) with freshwater animals in at least eight different families provided that of the eight species:

—at least one is a salmonid fish
—at least one is a non-salmonid fish
—at least one is a planktonic crustacean
—at least one is a benthic crustacean
—at least one is a benthic insect
—at least one of the benthic species is a detritivore

2. Acute-chronic ratios (see Section VI) for at least three species of aquatic animals provided that of the three species:

—at least one is a fish
—at least one is an invertebrate
—at least one is a freshwater species (the other two may be saltwater species)

3. At least one test with a freshwater alga or a chronic test with a freshwater vascular plant (see Section VIII). If plants are among the aquatic organisms that are most sensitive to the substance, tests with more than one species should be available.

4. At least one acceptable bioconcentration factor determined with an aquatic animal species, if a maximum permissible tissue concentration is available (see Section IX).

C. To derive a criterion for saltwater aquatic life, the following should be available:

1. Acute tests (see Section IV) with saltwater animals in at least eight different families provided that of the eight species:

—at least two different fish families are included
—at least five different invertebrate families are included
—either the Mysidae or Penaeidae family or both are included
—at least one of the invertebrate families is in a phylum other than Arthropoda

2. Acute-chronic ratios (see Section VI) for at least three species of aquatic animals provided that of the three species:

—at least one is a fish
—at least one is an invertebrate
—at least one is a saltwater species (the other two may be freshwater species)

3. At least one test with a saltwater alga or a chronic test with a saltwater vascular plant (see Section VIII). If plants are among the aquatic organisms most sensitive to the substance, tests with more than one species should be available.

4. At least one acceptable bioconcentration factor determined with an aquatic animal species, if a maximum permissible tissue concentration is available (see Section IX).

D. If all the requirements of the minimum data base are met, a criterion can usually be derived, except in special cases. For example, a criterion might not be possible if the acute-chronic ratios vary greatly with no apparent pattern. Also, if a criterion is to be related to a water quality characteristic, (see Sections V and VII), more data will be necessary.

Similarly, if the minimum data requirements are not satisfied, generally a criterion should not be derived, except in special cases. One such special case would be when less than the minimum amount of acute and chronic data are available, but the available data clearly indicate that the Final Residue Value would be substantially lower then either the Final Chronic Value or the Final Plant Value.

IV. Final Acute Value

A. Appropriate measures of the acute (short-term) toxicity of the substance to various species of aquatic animals are used to calculate the Final Acute Value. If acute values are available for fewer than twenty species, the Final Acute Value probably should be lower than the lowest value. On the other hand, if acute values are available for more than twenty species, the Final Acute Value probably should be higher than the lowest value, unless the most sensitive species is an important one. Although the procedure used to calculate the Final Acute Value has some limitations, it apparently is the best of the procedures currently available.

B. Acute toxicity tests should be conducted using procedures such as those described in:

ASTM Standard E 729–80, Practice for Conducting Acute Toxicity Tests with Fishes, Macroinvertebrates, and Amphibians. American Society for Testing and Materials, 1916 Race Street, Philadelphia, PA 19103.

ASTM Standard E 724–80, Practice for Conducting Static Acute Toxicity Tests with Larvae of Four Species of Bivalve Molluscs. American Society for Testing and Materials, 1916 Race Street, Philadelphia, PA 19103.

C. Results of acute tests in which food was added to the test solutions should not be used, because this may unnecessarily affect the results of the test.

D. Results of acute tests conducted with embryos should not be used (but see Section IV.E.2), because this is often an insensitive life stage.

E. Acute values should be based on endpoints and lengths of exposure appropriate to the life stage of the species tested. Therefore, only the following kinds of data on acute toxicity to aquatic animals should be used:

1. 48-hr EC50 values based on immobilization and 48-hr LC50 values for first-instar (less than 24 hours old) daphnids and other cladocerans, and second- or third-instar midge larvae.

2. 48- to 96-hr EC50 values based on incomplete shell development and 48- to 96-hr LC50 values for embryos and larvae of barnacles, bivalve molluscs (clams, mussels, oysters, and scallops), sea urchins, lobsters, crabs, shrimps, and abalones.

3. 96-hr EC50 values based on decreased shell deposition for oysters.

4. 96-hr EC50 values on immobilization or loss of equilibrium or both and 96-hr LC50 values for aquatic animals, except for cladocerans, midges, and animals whose behavior or physiology allows them to avoid

exposure to toxicant or for whom the acute adverse effect of the exposure cannot be adequately measured. Such freshwater and saltwater animals include air-breathing molluscs, unionid clams, operculate snails, and bivalve molluscs, except for some species that cannot "close up" and thus prevent exposure to toxicant, such as the bay scallop (*Argopecten irradians*).

F. For the use of LC50 or EC50 values for durations shorter and longer than those listed above, see Section X.

G. If the acute toxicity of the substance to aquatic animals has been shown to be related to a water quality characteristic such as hardness for freshwater organisms or salinity for saltwater organisms, a Final Acute Equation should be derived based on that water quality characteristic. Go to Section V.

H. If the acute toxicity of the substance has not been adequately shown to be related to a water quality characteristic, for each species for which at least one acute value is available, calculate the geometric mean of the results of all flow-through tests in which the toxicant concentrations were measured. For a species for which no such result is available, calculate the geometric mean of all available acute values, i.e., results of flow-through tests in which the toxicant concentrations were not measured and results of static and renewal tests based on initial total toxicant concentrations.

Note.—The geometric mean of N numbers is obtained by taking the Nth root of the product of N numbers. Alternatively, the geometric mean can be calculated by adding the logarithms of the N numbers, dividing the sum by N, and taking the antilog of the quotient. The geometric mean of two numbers can also be calculated as the square root of the product of the two numbers. The geometric mean of one number is that number. Either natural (base e) or common (base 10) logarithms can be used to calculate geometric means as long as they are used consistently within each set of data, i.e., the antilog used must match the logarithm used.

I. Count the number=N of species for which a species mean acute value is available.

J. Order the species mean acute values from low to high. Take the common logarithms of the N values (log mean values).

K. The intervals (cell widths) for the lower cumulative proportion calculations are 0.11 common log units apart, starting from the lowest log value. The value of 0.11 is an estimate of average precision and was calculated from replicate species acute values.

L. Starting with the lowest log mean value, separate the N values into intervals (or cells) calculated in Step IV. K.

M. Calculate cumulative proportions for each non-empty interval by summing the number of values in the present and all lower intervals and dividing by N. These calculations only need to be done for the first three non-empty intervals (or cells).

N. Calculate the arithmetic mean of the log mean values for each of the three intervals.

O. Using the two interval mean acute values and cumulative proportions closest to 0.05, linearly extrapolate or interpolate to the 0.05 log concentration. The Final Acute Value is the antilog of the 0.05 concentration.

In other words, where

Prop(1) and conc(1) are the cumulative proportion and mean log value for the lowest non-empty interval.

Prop(2) and conc(2) are the cumulative proportion and mean log value for the second lowest non-empty interval.

A=Slope of the cumulative proportions

B=The 0.05 log value

Then:

$A=[0.05-Prop(1)]/[Prop(2)-Prop(1)]$

$B=conc(1)+A\ [conc(2)-conc(1)]$

Final Acute Value$=10^B$

P. If for an important species, such as a recreationally or commercially important species, the geometric mean of the acute values from flow-through tests in which the toxicant concentrations were measured is lower than the Final Acute Value, then that geometric mean should be used as the Final Acute Value.

Q. Go to Section VI.

V. Final Acute Equation

A. When enough data are available to show that acute toxicity to two or more species is similarly affected by a water quality characteristic, this effect can be taken into account as described below. Pooled regression analysis should produce similar results, although data available for individual species would be weighted differently.

B. For each species for which comparable acute toxicity values are available at two or more different values of a water quality characteristic which apparently affects toxicity, perform a least squares regression of the natural logarithms of the acute toxicity values on the natural logarithms of the values of the water quality characteristic. (Natural logarithms [logarithms to the base e, denoted as ln] are used herein merely because they are easier to use on some hand calculators and computers than common logarithms [logarithms to the base 10]. Consistent use of either will produce the same result.) No transformation or a different transformation may be used if it fits the data better, but appropriate changes will be necessary throughout this section.

C. Determine whether or not each acute slope is meaningful, taking into account the range and number of values of the water quality characteristic tested. For example, a slope based on four data points may be of limited value if it is based only on data for a narrow range of values of the water quality characteristic. On the other hand, a slope based on only two data points may be meaningful if it is consistent with other information and if the two points cover a broad enough range of the water quality characteristic. If meaningful slopes are not available for at least two species or if the available slopes are not similar, return to Section IV. H., using the results of tests conducted under conditions and in water similar to those commonly used for toxicity tests with the species.

D. Calculate the mean acute slope (V) as the arithmetic average of all the meaningful acute slopes for individual species.

E. For each species calculate the geometric mean (W) of the acute toxicity values and the geometric mean (X) of the related values of the water quality characteristic.

F. For each species calculate the logarithmic intercept (Y) using the equation: $Y=\ln W-V(\ln X)$.

G. For each species calculate the species mean acute intercept as the antilog of Y.

H. Obtain the Final Acute Intercept by using the procedure described in Section IV. I–O, except insert "Intercept" for "Value".

I. If for an important species, such as a recreationally or commercially important species, the intercept calculated only from results of flow-through tests in which the toxicant concentrations were measured is lower than the Final Acute Intercept, then that intercept should be used as the Final Acute Intercept.

J. The Final Acute Equation is written as $e^{(V[\ln(\text{water quality characteristic})]+\ln Z)}$, where V=mean acute slope and Z=Final Acute Intercept.

VI. Final Chronic Value

A. The Final Chronic Value can be calculated in the same manner as the Final Acute Value or by dividing the Final Acute Value by the Final Acute-Chronic Ratio, depending on the data available. In some cases it will not be possible to calculate a Final Chronic Value.

B. Use only the results of flow-through (except renewal is acceptable for

daphnids) chronic tests in which the concentrations of toxicant in the test solutions were measured.

C. Do not use the results of any chronic test in which survival, growth, or reproduction among the controls was unacceptably low.

D. Chronic values should be based on endpoints and lengths of exposure appropriate to the species. Therefore, only the results of the following kinds of chronic toxicity tests should be used:

1. Life-cycle toxicity tests consisting of exposures of each of several groups of individuals of a species to a different concentration of the toxicant throughout a life cycle. To ensure that all life stages and life processes are exposed, the test should begin with embryos or newly hatched young less than 48 hours old (less than 24 hours old for daphnids), continue through maturation and reproduction, and with fish should end not less than 24 days (90 days for salmonids) after the hatching of the next generation. For fish, data should be obtained and analyzed on survival and growth of adults and young, maturation of males and females, embryos spawned per female, embryo viability (salmonids only) and hatchability. For daphnids, data should be obtained and analyzed on survival and young per female.

2. Partial life-cycle toxicity tests consisting of exposures of each of several groups of individuals of a species of fish to a different concentration of the toxicant through most portions of a life cycle. Partial life-cycle tests are conducted with fish species that require more than a year to reach sexual maturity, so that the test can be completed in less than 15 months, but still expose all major life stages to the toxicant. Exposure to the toxicant begins with immature juveniles at least 2 months prior to active gonad development, continues through maturation and reproduction, and ends not less than 24 days (90 days for salmonids) after the hatching of the next generation. Data should be obtained and analyzed on survival and growth of adults and young, maturation of males and females, embryos spawned per female, embryo viability (salmonids only) and hatchability.

3. Early-life-stage toxicity tests consisting of 28- to 32-days (60 days post-hatch for salmonids) exposures of the early life stages of a species of fish from shortly after fertilization through embryonic, larval, and early juvenile development. Data should be obtained and analyzed on survival and growth.

E. Do not use the results of an early-life-stage test if results of a life-cycle or partial life-cycle test with the same species are available.

F. A chronic value is obtained by calculating the geometric mean of the lower and upper chronic limits from a chronic test. A lower chronic limit is the highest tested concentration (1) in an acceptable chronic test, (2) which did not cause the occurrence (which was statistically significantly different from the control at $p=0.05$) of a specified adverse effect, and (3) below which no tested concentration caused such an occurrence. An upper chronic limit is the lowest tested concentration (1) in an acceptable chronic test, (2) which did cause the occurrence (which was statistically significantly different from the control at $p=0.05$) of a specified adverse effect and (3) above which all tested concentrations caused such an occurrence.

Note.—Various authors have used a variety of terms and definitions to interpret the results of chronic tests, so reported results should be reviewed carefully.

G. If the chronic toxicity of the substance to aquatic animals has been adequately shown to be related to a water quality characteristic such as hardness for freshwater organisms or salinity for saltwater organisms, a Final Chronic Equation should be derived based on that water quality characteristic. Go to Section VII.

H. If chronic values are available for eight species as described in Section III. B.1 or III. C.1, a species mean chronic value should be calculated for each species for which at least one chronic value is available by calculating the geometric mean of all the chronic values for the species. The Final Chronic Value should then be obtained using the procedures described in Section IV. I–O. Then go to Section VI. M.

I. For each chronic value for which at least one appropriate acute value is available, calculate an acute-chronic ratio, using for the numerator the arithmetic average of the results of all standard flow-through acute tests in which the concentrations were measured and which are from the same study as the chronic test. If such an acute test is not available, use for the numerator the results of a standard acute test performed at the same laboratory with the same species, toxicant and dilution water. If no such acute test is available, use the species mean acute value for the numerator.

Note.—If the acute toxicity or chronic toxicity or both of the substance have been adequately shown to be related to a water quality characteristic, the numerator and the denominator must be based on tests performed in the same water.

J. For each species, calcuate the species mean acute-chronic ratio as the geometric mean of all the acute-chronic ratios available for that species.

K. For some substances the species mean acute-chronic ratio seems to be the same for all species, but for other substances the ratio seems to increase as the species mean acute value increases. Thus the Final Acute-Chronic Ratio can be obtained in two ways, depending on the data available.

1. If no major trend is apparent and the acute-chronic ratios for a number of species are within a factor of ten, the final Acute-Chronic Ratio should be calculated as the geometric mean of all the species mean acute-chronic ratios available for both freshwater and saltwater species.

2. If the species mean acute-chronic ratio seems to increase as the species mean acute value increases, the value of the acute-chronic ratio for species whose acute values are close to the Final Acute Value should be chosen as the Final Acute-Chronic Ratio.

L. Calculate the Final Chronic Value by dividing the Final Acute Value by the Final Acute-Chronic Ratio.

M. If the species mean chronic value of an important species, such as a commercially or recreationally important species, is lower than the Final Chronic Value, then that species mean chronic value should be used as the Final Chronic Value.

N. Go to Section VIII.

VII. Final Chronic Equation

A. For each species for which comparable chronic toxicity values are available at two or more different values of a water quality characteristic which apparently affects chronic toxicity, perform a least squares regression of the natural logarithms of the chronic toxicity values on the natural logarithms of the water quality characteristic values. No transformation or a different transformation may be used if it fits the data better, but appropriate changes will be necessary throughout this section. It is probably preferable, but not necessary, to use the same transformation that was used with the acute values in Section V.

B. Determine whether or not each chronic slope is meaningful, taking into account the range and number of values of the water quality characteristic tested. For example, a slope based on four data points may be of limited value if it is based only on data for a narrow range of values of the water quality characteristic. On the other hand, a slope based on only two data points may be meaningful if it is consistent with other information and if the two points cover a broad enough range of the water quality characteristic. If a

meaningful chronic slope is not available for at least one species, return to Section VI. H.

C. Calculate the mean chronic slope (L) as the arithmetic average of all the meaningful chronic slopes for individual species.

D. For each species calculate the geometric mean (M) of the toxicity values and the geometric mean (P) of the related values of the water quality characteristic.

E. For each species calculate the logarithmic intercept (Q) using the equation: $Q = \ln M - L(\ln P)$.

F. For each species calculate a species mean chronic intercept as the antilog of Q.

G. Obtain the Final Chronic Intercept by using the procedure described in Section IV. I–O, except insert "Intercept" for "Value".

H. If the species mean chronic intercept of an important species, such as a commercially or recreationally important species, is lower than the Final Chronic Intercept, then that species mean chronic intercept should be used as the Final Chronic Intercept.

I. The Final Chronic Equation is written as $e^{(L\ln(\text{Water quality characteristic})+\ln R)}$, where L=mean chronic slope and R= Final Chronic Intercept.

VIII. Final Plant Value

A. Appropriate measures of the toxicity of the substance to aquatic plants are used to compare the relative sensitivities of aquatic plants and animals.

B. A value is a concentration which decreased growth (as measured by dry weight, chlorophyll, etc.) in a 96-hr or longer test with an alga or in a chronic test with an aquatic vascular plant.

C. Obtain the Final Plant Value by selecting the lowest plant value from a test in which the toxicant concentrations were measured.

IX. Final Residue Value

A. The Final Residue Value is derived in order to (1) prevent commercially or recreationally important aquatic organisms from exceeding relevant FDA action levels and (2) protect wildlife, including fishes and birds, that eat aquatic organisms from demonstrated adverse effects. A residue value is calculated by dividing a maximum permissible tissue concentration by an appropriate bioconcentration factor (BCF), where the BCF is the quotient of the concentration of a substance in all or part of an aquatic organism divided by the concentration in water to which the organism has been exposed. A maximum permissible tissue concentration is either (1) an action level from the FDA Administrative Guidelines Manual for fish oil or for the edible portion of fish or shellfish, or (2) a maximum acceptable dietary intake based on observations on survival, growth or reproduction in a chronic wildlife feeding study. If no maximum permissible tissue concentration is available, go to Section X because no Final Residue Value can be derived.

B. 1. A BCF determined in a laboratory test should be used only if it was calculated based on measured concentrations of the substance in the test solution and was based on an exposure that continued until either steady-state or 28-days was reached. Steady-state is reached when the BCF does not change significantly over a period of time, such as two days or 16 percent of the length of the exposure, whichever is longer. If a steady-state BCF is not available for a species, the available BCF for the longest exposure over 28 days should be used for that species.

2. A BCF from a field exposure should be used only when it is known that the concentration of the substance was reasonably constant for a long enough period of time over the range of territory inhabited by the organisms.

3. If BCF values from field exposures are consistently lower or higher than those from laboratory exposures, then only those values from field exposures should be used if possible.

4. A BCF should be calculated based on the concentration of the substance and its metabolites, which are structurally similar and are not much more soluble in water than the parent compound, in appropriate tissue and should be corrected for the concentration in the organisms at the beginning of the test.

5. A BCF value obtained from a laboratory or field exposure that caused an observable adverse effect on the test organism may be used only if it is similar to that obtained with unaffected organisms at lower concentrations in the same test.

6. Whenever a BCF is determined for a lipid-soluble substance, the percent lipids should also be determined in the tissue for which the BCF was calculated.

C. A BCF calculated using dry tissue weights must be converted to a wet tissue weight basis by multiplying the dry weight BCF value by 0.1 for plankton and by 0.2 for individual species of fishes and invertebrates.

Note.—The values of 0.2 and 0.1 were derived from data published in:

McDiffett, W. F., 1970. Ecology 51:975–988.
Brocksen, R. W., et al. 1968. J. Wildlife Management 32:52–75.
Cummins, K. W., et al. 1973. Ecology 54: 336–345.
Pesticide Analytical Manual, Volume I, Food and Drug Administration, 1969.
Love, R. M., 1957. In The Physiology of Fishes, Vol. I, M. E. Brown, ed. Academic Press, New York. p. 411.
Ruttner, F., 1963. Fundamentals of Limnology. 3rd ed. Trans. by D. G. Frey and F. E. J. Fry. Univ. of Toronto Press, Toronto.

Some additional values can be found in:

Sculthorpe, C. D., 1967. The Biology of Aquatic Vascular Plants. Arnold Publishing Ltd., London.

D. If enough pertinent data exist, several residue values can be calculated by dividing maximum permissible tissue concentrations by appropriate BCF values.

1. For each available maximum acceptable dietary intake derived from a chronic feeding study with wildlife, including birds and aquatic organisms, the appropriate BCF is based on the whole body of aquatic species which constitute or represent a major portion of the diet of the tested wildlife species.

2. For an FDA action level, the appropriate BCF is the highest geometric mean species BCF for the edible portion (muscle for decapods, muscle with or without skin for fishes, adductor muscle for scallops and total living tissue for other bivalve molluscs) of a consumed species. The highest species BCF is used because FDA action levels are applied on a species-by-species basis.

E. For lipid-soluble substances, it may be possible to calculate additional residue values. Because steady-state BCF values for a lipid-soluble chemical seem to be proportional to percent lipids from one tissue to another and from one species to another, extrapolations can be made from tested tissues or species to untested tissues or species on the basis of percent lipids.

1. For each BCF for which the percent lipids is known for the same tissue for which the BCF was measured, the BCF should be normalized to a one percent lipid basis by dividing the BCF by the percent lipids. This adjustment to a one percent lipid basis makes all the measured BCF values comparable regardless of the species or tissue for which the BCF was measured.

2. Calculate the geometric mean normalized BCF. Data for both saltwater and freshwater species can be used to determine the mean normalized BCF, because the normalized BCF seems to be about the same for both kinds of organisms.

3. Residue values can then be calculated by dividing the maximum permissible tissue concentrations by the mean normalized BCF and by a percent lipids value appropriate to the maximum permissible tissue concentration, *i.e.*,

$$\text{Residue Value} = \frac{\text{(maximum permissible tissue concentration)}}{\text{(mean normalized BCF)(appropriate percent lipids)}}$$

a. For an FDA action level for fish oil, the appropriate percent lipids value is 100.

b. For an FDA action level for fish, the appropriate percent lipids value is 15 for freshwater criteria and 16 for saltwater criteria because FDA action levels are applied on a species-by-species basis to commonly consumed species. The edible portion of the freshwater lake trout averages about 15 percent lipids, and the edible portion of the saltwater Atlantic herring averages about 16 percent lipids (Sidwell, V. D., et al. 1974 Composition of the Edible Portion of Raw (Fresh or Frozen) Crustaceans, Finfish, and Mollusks. I. Protein, Fat, Moisture, Ash, Carbohydrate, Energy Value, and Cholesterol. Marine Fisheries Review 36:21–35).

c. For a maximum acceptable dietary intake derived from a chronic feeding study with wildlife, the appropriate percent lipids is the percent lipids of an aquatic species or group of aquatic species which constitute a major portion of the diet of the wildlife species.

F. The Final Residue Value is obtained by selecting the lowest of the available residue values. It should be noted that in many cases the Final Residue Value will not be low enough. For example, a residue value calculated from an FDA action level would result in an average concentration in the edible portion of a fatty species that is at the action level. On the average half of the individuals of the species would have concentrations above the FDA action level. Also, the results of many chronic feeding studies are concentrations that cause adverse effects.

X. Other Data

Pertinent information that could not be used in earlier sections may be available concerning adverse effects on aquatic organisms and their uses. The most important of these are data on flavor impairment, reduction in survival, growth, or reproduction, or any other adverse effect that has been shown to be biologically significant. Especially important are data for species for which no other data are available. Data from behavioral, micorcosm, field, and physiological studies may also be available.

XI. Criterion

A. The criterion consists of two concentrations, one that should not be exceeded on the average in a 24-hour period and one that should not be exceeded at any time during the 24-hour period. This two-number criterion is intended to identify water quality conditions that should protect aquatic life and its uses from acute and chronic adverse effects of both cumulative and noncumulative substances without being as restrictive as a one-number criterion would have to be to provide the same degree of protection.

B. The maximum concentration is the Final Acute Value or is obtained from the Final Acute Equation.

C. The 24-hour average concentration is obtained from the Final Chronic Value, the Final Plant Value, and the Final Residue Value by selecting the lowest available value, unless other data (see Section X) from tests in which the toxicant concentrations were measured show that a lower value should be used. If toxicity is related to a water quality characteristic, the 24-hour average concentration is obtained from the Final Chronic Equation, the Final Plant Value, and the Final Residue Value by selecting the one that results in the lowest concentrations in the normal range of the water quality characteristic, unless other data (see Section X) from tests in which the toxicant concentrations were measured show that a lower value should be used.

D. The criterion is (the 24-hour average concentration) as a 24-hour average and the concentration should not exceed (the maximum concentration) at any time.

XII. Review

A. On the basis of all available pertinent laboratory and field information, determine if the criterion is consistent with sound scientific evidence. If it is not, another criterion, either higher or lower, should be derived using appropriate modifications of the Guidelines.

These Guidelines were written by Charles E. Stephan, Donald I. Mount, David J. Hansen, John H. Gentile, Gary A. Chapman and William A. Brungs of the U.S.E.P.A. Environmental Research Laboratories in Corvallis, Oregon, Duluth, Minnesota, Gulf Breeze, Florida, and Narragansett, Rhode Island. Numerous other people, many of whom do not work for U.S.E.P.A., provided assistance and suggestions.

Appendix C–Guidelines and Methodology Used in the Preparation of Health Effect Assessment Chapters of the Consent Decree Water Criteria Documents

I. Objective

The objective of the health effect assessment chapters of the ambient water criteria documents is to estimate ambient water concentrations which do not represent a significant risk to the public. These assessments should constitute a review of all relevant information on individual chemicals or chemical classes in order to derive criteria that represent, in the case of suspect or proven carcinogens, various levels of incremental cancer risk, or, in the case of other pollutants, estimates of no-effect levels.

Ideally, ambient water quality criteria should represent levels for compounds in ambient water that do not pose a hazard to the human population. However, in any realistic assessment of human health hazard, a fundamental distinction must be made between absolute safety and the recognition of some risk. Criteria for absolute safety would have to be based on detailed knowledge of dose-response relationships in humans, including all sources of chemical exposure, the types of toxic effects elicited, the existence of thresholds for the toxic effects, the significance of toxicant interactions, and the variances of sensitivities and exposure levels within the human population. In practice, such absolute criteria cannot be established because of deficiencies in both the available data and the means of interpreting this information. Consequently, the individual human health effects chapters propose criteria which minimize or specify the potential risk of adverse human effects due to substances in ambient water. Potential social or economic costs and benefits are not considered in the formulation of the criteria.

II. Types of Criteria

Ambient water quality criteria are based on three types of biological endpoints: carcinogenicity, toxicity (i.e., all adverse effects other than cancer), and organoleptic effects.

For the purpose of deriving ambient water quality criteria, carcinogenicity is regarded as a non-threshold phenomenon. Using this assumption, "safe" or "no effect" levels for carcinogens cannot be established because even extremely small doses must be assumed to elicit a finite increase in the incidence of the response. Consequently, water quality

criteria for carcinogens are presented as a range of pollutant concentrations associated with corresponding incremental risks.

For compounds which do not manifest any apparent carcinogenic effect, the threshold assumption is used in deriving a criterion. This assumption is based on the premise that a physiological reserve capacity exists within the organism which is thought to be depleted before clinical disease ensues. Alternatively, it may be assumed that the rate of damage will be insignificant over the life span of the organism. Thus, ambient water quality criteria are derived for non-carcinogenic chemicals, and presumably result in no observable-adverse-effect levels (NOAELs) in the exposed human population.

In some instances, criteria are based on organoleptic characteristics, i.e., thresholds for taste or odor. Such criteria are established when insufficient information is available on toxicologic effects or when the estimate of the level of the pollutant in ambient water based on organoleptic effects is lower than the level calculated from toxicologic data. It should be recognized that criteria based solely on organoleptic effects do not necessarily represent approximations of acceptable risk levels for human health.

Several ambient water quality criteria documents deal with classes of compounds which include chemicals exhibiting varying degrees of structural similarity. Because prediction of biological effects based solely on structural parameters is difficult, the derivation of compound-specific criteria is preferable to a class criterion. A compound-specific criterion is defined as a level derived from data on each individual subject compound that does not represent a significant risk to the public. For some chemical classes, however, a compound-specific criterion cannot be derived for each member of a class. In such instances, it is sometimes justifiable to derive a class criterion in which available data on one member of a class may be used to estimate criteria for other chemicals of the class because a sufficient data base is not available for those compounds.

For some chemicals and chemical classes, the data base was judged to be insufficient for the derivation of a criterion. In those cases, deficiencies in the available information are detailed.

III. Approach

The human health effects chapters attempt to summarize all information on the individual chemicals or classes of chemicals which might be useful in the risk assessment process to develop water quality criteria. Although primary emphasis is placed on identifying epidemiologic and toxicologic data, these assessments typically contain discussions on four topics: existing levels of human exposure, pharmacokinetics, toxic effects, and criterion formulation.

For all documents, an attempt is made to include the known relevant information. Review articles and reports are often used in the process of data evaluation and synthesis. Scientific judgment is exercised in the review and evaluation of the data in each document and in the identification of the adverse effects against which protective criteria are sought. In addition, each of these documents is reviewed by a peer committee of scientists familiar with the specific compound(s). These work groups evaluate the quality of the available data, the completeness of the data summary, and the validity of the derived criterion.

In the analysis and organization of the data, an attempt is made to be consistent with respect to the format and the application of acceptable scientific principles. Evaluation procedures used in the hazard assessment process follow the principles outlined by the National Academy of Sciences in *Drinking Water and Health* (1977) and the guidelines of the Carcinogen Assessment Group of the U.S. EPA.

A. Exposure

The exposure section of the health effects chapters reviews known information on current levels of human exposure to the individual pollutant from all sources. Much of the data was obtained from monitoring studies of air, water, food, soil, and human or animal tissue residues. The major purpose of this section is to provide background information on the contribution of water exposure relative to all other sources. Consequently, the exposure section includes subsections reviewing different routes of exposure including water and food ingestion, inhalation, and dermal contact.

Information on exposure can be valuable in developing and assessing a water quality criterion. In these documents exposure from consumption of contaminated water and contaminated fish and shellfish products is used in criterion formulation. Data for all modes of exposure are useful in relating total intake to the expected contribution from contaminated water, fish, and shellfish. In addition, information for all routes of exposure, not limited to drinking water and fish and shellfish ingestion, can be used to justify or assess the feasibility of the formulation of criteria for ambient water.

The use of fish consumption as an exposure factor requires the quantitation of pollutant residues in the edible portions of the ingested species. Accordingly, bioconcentration factors (BCFs) are used to relate pollutant residues in aquatic organisms to the pollutant concentration in the ambient waters in which they reside.

To estimate the average per capita intake of a pollutant due to consumption of contaminated fish and shellfish the results of a diet survey were analyzed to calculate the average consumption of freshwater and estuarine fish and shellfish (U.S. EPA, 1980). A species is considered to be a consumed freshwater or estuarine fish and shellfish species if at some stage in its life cycle, it is harvested from fresh or estuarine water for human consumption in significant quantities (Stephan, 1980).

Three different procedures are used to estimate the weighted average BCF depending upon the lipid solubility of the chemical and the availability of bioconcentration data.

For lipid-soluble compounds, the average BCF is calculated from the weighted average percent lipids in the edible portions of consumed freshwater and estuarine fish and shellfish which was calculated from data on consumption of each species and its corresponding percent lipids to be 3.0 percent (Stephan, 1980). Because the steady-state BCFs for lipid-soluble compounds are proportional to percent lipids, bioconcentration factors for fish and shellfish can be adjusted to the average percent lipids for aquatic organisms consumed by Americans. For many lipid-soluble pollutants, there exists at least one BCF for which the percent lipid value was measured for the tissues for which the BCF is determined.

With 3.0 percent as the weighted average percent lipids for freshwater and estuarine fish and shellfish in the average diet, a BCF, and a corresponding percent lipid value, the weighted average bioconcentration factor can be calculated.

Example:

Weighted average percent lipids for average diet=3.0 percent

Measured BCF of 17 for trichloroethylene with bluegills at 4.8 percent lipids

Weighted average BCF for average diet equals

$$17 \times \frac{3.0\%}{4.8\%} = 10.6$$

As an estimate, 10.6 is used for the BCF.

In those cases where an appropriate bioconcentration factor is not available, the equation "Log BCF=(0.85 Log P)-0.70" can be used (Veith, et al. 1979) to estimate the BCF for aquatic organisms containing about 7.6 percent lipids (Veith, 1980) from the octanol/water partition coefficient P. An adjustment for percent lipids in the average diet versus 7.6 percent is made in order to derive the weighted average bioconcentration factor.

For non-lipid-soluble compounds, the available BCFs for the edible portion of consumed freshwater and estuarine fish and shellfish are weighted according to consumption factors to determine a weighted BCF representative of the average diet.

B. Pharmacokinetics

This section summarizes the available information on the absorption, distribution, metabolism, and elimination of the compound(s) in humans and experimental mammals. Conceptually, such information is useful in validation of inter- and intraspecies extrapolations, and in characterizing the modes of toxic action. Sufficient information on absorption and excretion in animals, together with a knowledge of ambient concentrations in water, food, and air, could be useful in estimating body burdens of chemicals in the human population. Distribution data which suggest target organs or tissues are desirable for interspecies comparison techniques. In terms of the derivation of criteria, pharmacokinetic data are essential to estimate equivalent oral doses based on data from inhalation or other routes of exposure.

C. Effects

This section summarizes information on biological effects in both humans and experimental mammals resulting in: acute, subacute, and chronic toxicity, synergism and/or antagonism, teratogenicity, mutagenicity, or carcinogenicity.

The major goal of this section is to survey the suitability of the data for use in assessment of hazard and to determine which biological end-point, i.e., non-threshold, threshold, or organoleptic, should be selected for use in criterion formulation.

Because this section attempts to assess potential human health effects, data on documented human effects are thoroughly evaluated. However, several factors inherent in human epidemiological studies usually preclude the use of such data in generating water quality criteria. These problems, as summarized by the National Academy of Sciences (NAS, 1977) are as follows:

1. Epidemiology cannot tell what effects a material will have until after humans have been exposed. One must not conduct what might be hazardous experiments on man.
2. If exposure has been ubiquitous, it may be impossible to assess the effects of a material, because there is no unexposed control group. Statistics of morbidity obtained before use of a new material can sometimes be useful, but when latent periods are variable and times of introduction and removal of materials overlap, historical data on chronic effects are usually unsatisfactory.
3. It is usually difficult to determine doses in human exposures.
4. Usually, it is hard to identify small changes in common effects, which may nonetheless be important if the population is large.
5. Interactions in a "nature-designed" experiment usually cannot be controlled.

Although these problems often prevent the use of epidemiological data in quantitative risk assessments, qualitative similarities or differences between documented effects in humans and observed effects in experimental mammals are extremely useful in testing the validity of animal-to-man extrapolations. Consequently, in each case, an attempt is made to identify and utilize both epidemiologic and animal dose-response data. Criteria derived from such a confirmed data base are considered to be reliable.

The decision to establish a criterion based on a non-threshold model is made after evaluating all available information on carcinogenicity and supportive information on mutagenicity. The approach and conditions for the qualitative decision of carcinogenicity are outlined in the U.S. EPA Interim Cancer Guidelines (41 FR 21402), in a report by Albert, et al. (1977), and in the Interagency Regulatory Liaison Group (IRLG) guidelines on carcinogenic risks (IRLG, 1979). It is assumed that a substance which induces a statistically significant carcinogenic response in animals has the capacity to cause cancer in humans. A chemical which has not induced a significant cancer response in humans or experimental animals is not identified as a carcinogen, even though its metabolites or close structural analogues might induce a carcinogenic response or it was shown to be mutagenic in an *in vitro* system.

It is recognized that some potential human carcinogens may not be identified by the guidelines given above. For example, compounds for which there is plausible but weak qualitative evidence of carcinogenicity in experimental animal systems (such as data from mouse skin painting or strain A mouse pulmonary adenoma) would be included in this category. The derivation of a criterion for human consumption from these studies in not valid, regardless of the qualitative outcome. In addition, there are certain compounds (e.g., nickel and beryllium) which were shown to be carcinogenic in humans after inhalation exposure by chemical form, but have induced thus far no response in animals or humans via ingesting their soluble salts. Nevertheless, a non-threshold criterion is developed for beryllium because tumors have been produced in animals at a site removed from the site of administration; in contrast, a threshold criterion is recommended for nickel because there is no evidence of tumors at sites distant resulting from administration of nickel solutions by either ingestion or injection.

For those compounds which were not reported to induce carcinogenic effects or for those compounds for which carcinogenic data are lacking or insufficient, an attempt is made to estimate a no-effect level. In many respects, the hazard evaluation from these studies is similar to that of bioassays for carcinogenicity. In order to more closely approximate conditions of human exposure, preference is given to chronic studies involving oral exposures in water or diet over a significant portion of the animal life span. Greatest confidence is placed in those studies which demonstrate dose-related adverse effects as well as no-effect levels.

There is considerable variability in the biological endpoints used to define a no-effect level. They may range from gross effects, such as mortality, to more subtle biochemical, physiological, or pathological changes. Teratogenicity, reproductive impairment, and behavioral effects are significant toxic consequences of environmental contamination. In instances where carcinogenic or other chronic effects occur at exposure levels below those causing teratogenicity, reproductive impairment, or behavioral effects, the former are used in deriving the criterion. For most of the compounds evaluated thus far, teratogenicity and reproductive impairment occur at doses near maximum tolerated levels with dose administration schedules well above estimated environmental exposure levels. Moreover, information on behavioral effects, which could be of

significance, is not available for most of the compounds under study. Consequently, most NOAELs derived from chronic studies are based either on gross toxic effects or on effects directly related to functional impairment or defined pathological lesions.

For compounds on which adequate chronic toxicity studies are not available, studies on acute and subacute toxicity assume greater significance. Acute toxicity studies usually involve single exposures at lethal or near lethal doses. Subacute studies often involve exposures exceeding 10 percent of the life span of the test organism, e.g., 90 days for the rat with an average life span of 30 months. Such studies are useful in establishing the nature of the compound's toxic effects and other parameters of compound toxicity, such as target organ effects, metabolic behavior, physiological/biochemical effects, and patterns of retention and tissue distribution. The utility of acute and subacute studies in deriving environmentally meaningful NOELs is uncertain, although McNamara (1976) has developed application factors for such derivations.

In some cases where adequate data are not available from studies utilizing oral routes of administration, no-effect levels for oral exposures may be estimated from dermal or inhalation studies. Such estimates involve approximations of the total dose administered based on assumptions about breathing rates and/or magnitude of absorption.

D. Criterion Rationale

This section reviews existing standards for the chemical(s), summarizes data on current levels of human exposure, attempts to identify special groups at risk, and defines the basis for the recommended criterion.

Information on existing standards is included primarily for comparison with the proposed water quality criteria. Some of the present standards, such as those recommended by the Occupational Safety and Health Administration (OSHA) or the American Conference of Governmental Industrial Hygienists (ACGIH), are based on toxicologic data but are intended as acceptable levels for occupational rather than environmental exposure. Other levels, such as those recommended by the National Academy of Sciences in *Drinking Water and Health* (1977) or in the U.S. EPA Interim Primary Drinking Water Standards, are more closely related to proposed water quality criteria. Emphasis is placed on detailing the basis for the existing standards wherever possible.

Summaries of current levels of human exposure, presented in this section, specifically address the suitability of the data to derive water quality criteria. The identification of special groups at risk, either because of geographical or occupational differences in exposure or biological differences in susceptibility to the compound(s), focuses on the impact that these groups should have on the development of water quality criteria.

The basis for the recommended criteria section summarizes and qualifies all of the data used in developing the criteria.

IV. Guidelines for Criteria Derivation

The derivation of water quality criteria from laboratory animal toxicity data is essentially a two-step procedure. First, a total daily intake for humans must be estimated which establishes either a defined level of risk for non-threshold effects or a no-effect level for threshold effects. Secondly, assumptions must be made about the contribution of contaminated water and the consumption of fish/shellfish to the total daily intake of the chemical. These estimates are then used to establish the tolerable daily intake and consequently the water quality criterion.

A. Non-Threshold Effects

After the decision has been made that a compound has the potential for causing cancers in humans and that data exist which permit the derivation of a criterion, the water concentration which is estimated to cause a lifetime carcinogenic risk of 10^{-5} is determined. The lifetime carcinogenicity risk is the probability that a person would get cancer sometime in his or her life assuming continuous exposure to the compound. The water concentration is calculated by using the low-dose extrapolation procedure proposed by Crump (1980). This procedure is an improvement on the multistage low dose extrapolation procedure by Crump, et al. (1977).

The data used for quantitative estimates are of two types: (1) lifetime animal studies, and (2) human studies where excess cancer risk has been associated with exposure to the agent. In animal studies it is assumed, unless evidence exists to the contrary, that if a carcinogenic response occurs at the dose levels used in the study, then proportionately lower responses will also occur at all lower doses, with an incidence determined by the extrapolation model discussed below.

1. Choice of Model.

There is no really solid scientific basis for any mathematical extrapolation model which relates carcinogen exposure to cancer risks at the extremely low levels of concentration that must be dealt with in evaluating the environmental hazards. For practical reasons, such low levels of risk cannot be measured directly either using animal experiments or epidemiologic studies. We must, therefore, depend on our current understanding of the mechanisms of carcinogenesis for guidance as to which risk model to use. At the present time, the dominant view of the carcinogenic process involves the concept that most agents which cause cancer also cause irreversible damage to DNA. This position is reflected by the fact that a very large proportion of agents which cause cancer are also mutagenic. There is reason to expect that the quantal type of biological response that is characteristic of mutagenesis is associated with a linear non-threshold dose-response relationship. Indeed, there is substantial evidence from mutagenesis studies with both ionizing radiation and with a wide variety of chemicals that this type of dose-response model is the appropriate one to use. This is particularly true at the lower end of the dose-response curve; at higher doses, there can be an upward curvature, probably reflecting the effects of multistage processes on the mutagenic response. The linear non-threshold dose-response relationship is also consistent with the relatively few epidemiological studies of cancer responses to specific agents that contain enough information to make the evaluation possible (e.g., radiation-induced leukemia, breast and thyroid cancer, skin cancer induced by arsenic in drinking water, and liver cancer induced by aflatoxin in the diet). There is also some evidence from animal experiments that is consistent with the linear non-threshold hypothesis (e.g., liver tumors induced in mice by 2-acetylaminofluorene in the large scale ED_{01} study at the National Center of Toxicological Research, and the initiation stage of the two-stage carcinogenesis model in the rat liver and the mouse skin).

Because it has the best, albeit limited, scientific basis of any of the current mathematical extrapolation models, the linear non-threshold model has been adopted as the primary basis for risk extrapolation to low levels of the dose-response relationship. The risk assessments made with this model should be regarded as conservative, representing the most plausible upper limit for the risk; i.e., the true risk is not likely to be higher than the estimate, but it could be smaller.

The mathematical formulation chosen to describe the linear, non-threshold dose-response relationship at low doses is the improved multistage model developed by Crump (1980). This model employs enough arbitrary constants to be able to fit almost any monotonically increasing dose-response data and it incorporates a procedure for estimating the largest possible linear slope (in the 95 percent confidence limit sense) at low extrapolated doses that is consistent with the data at all dose levels of the experiment. For this reason, it may be called a "linearized" multistage model.

2. Procedure of Low-Dose Extrapolation Based on Animal Carcinogenicity Data.

A. Description of the Extrapolation Model

Let P(d) represent the lifetime risk (probability) of cancer at dose d. The multistage model has the form

$$P(d)=1-\exp[-(q_0+q_1d+q_2d^2+\ldots+q_kd^k)]$$

where:

$q_i>0$, and $i=0, 1, 2, \ldots, k$

Equivalently,

$$A(d)=1-\exp[-(q_1d+q_2d^2+\ldots+q_kd^k)]$$

where:

$$A(d) = \frac{P(d) - P(o)}{1 - P(o)},$$

is the extra risk over background rate at dose d.

The point estimate of the coefficients q_i, $i=0, 1, 2, \ldots, k$, and consequently the extra risk function A(d) at any given dose d, is calculated by maximizing the likelihood function of the data.

The point estimate and the 95 percent upper confidence limit of the extra risk A(d) are calculated by using the computer program GLOBAL 79 developed by Crump and Watson (1979). Upper 95 percent confidence limits on the extra risk and lower 95 percent confidence limits on the dose producing a given risk are determined from a 95 percent upper confidence limit, q_1^*, on parameter q_1. Whenever $q_1 \neq 0$, at low doses extra risk A(d) has approximately the form $A(d)=q_1 \times d$. Therefore, $q_1 \times d$ is a 95 percent upper confidence limit on the extra risk and R/q_1^* is a 95 percent lower confidence limit on the dose producing an extra risk of R. Let L_0 be the maximum value of the log-likelihood function. The upper limit q_1^* is calculated buy increasing q_1 to a value q_1^* such that when the log-likelihood is again maximized subject to this fixed value q_1^* for the linear coefficient, the resulting maximum value of the log-likelihood L_1 satisfies the equation $2(L_0-L_1)=2.70554$ where 2.70554 is the cumulative 90 percent point of the chi-square distribution with one degree of freedom, which corresponds to a 95 percent upper limit (one-sided). This approach of computing the upper confidence limit for the extra risk A(d) is an improvement on the Crump, et al. (1977) model. The upper confidence limit for the extra risk calculated at low doses is always linear. This is conceptually consistent with the linear nonthreshold concept discussed earlier. The slope q_1^* is taken as an upper bound of the potency of the chemical in inducing cancer at low doses.

In fitting the dose-response model, the number of terms in the polynomial g is chosen equal to (h–1), where h is the number of dose groups in the experiment, including the control group.

Whenever the multistage model does not fit the data sufficiently, data at the highest dose is deleted and the model is refitted to the rest of the data. This is continued until an acceptable fit to the data is obtained. To determine whether or not a fit is acceptable, the chi-square statistic:

$$X^2 = \sum_{i=1}^{h} \frac{(X_i - N_iP_i)^2}{N_iP_i\,(1 - P_i)}$$

is calculated, where N_i is the number of animals in the ith dose group, X_i is the number of animals in the ith dose group with a tumor response, P_i is the probability of a response in the ith dose group estimated by fitting the multistage model to the data, and h is the number of remaining groups.

The fit is determined to be unacceptable whenever chi-square (X^2) is larger than the cumulative 99 percent point of the chi-square distribution with f degrees of freedom, where f equals the number of dose groups minus the number of non-zero multistage coefficients.

3. Selection and Form of Data used to Estimate Parameters in the Extrapolation Model.

For some chemicals, several studies in different animal species, strains, and sexes each conducted at several doses and different routes of exposure are available. A choice must be made as to which of the data sets from several studies are to be used in the model. It is also necessary to correct for metabolism differences between species and for differences in absorption via different routes of administration. The procedures, listed below, used in evaluating these data are consistent with the estimate of a maximum-likely-risk.

a. The tumor incidence data are separated according to organ sites or tumor types. The set data (i.e., dose and tumor incidence) used in the model is set where the incidence is statistically significantly higher than the control for at least one test dose level and/or where the tumor incidence rate shows a statistically significant trend with respect to dose level. The data set which gives the highest estimate of lifetime carcinogenic risk q_1^* is selected in most cases. However, efforts are made to exclude data sets which produce spuriously high risk estimates because of a small number of animals. That is, if two sets of data show a similar dose-response relationship and one has a very small sample size, the set of data which has the larger sample size is selected for calculating the carcinogenic potency.

b. If there are two or more data sets of comparable size which are identical with respect to species, strain, sex, and tumor sites, the geometric mean of q_1^*, estimated from each of these data sets is used for risk assessment. The geometric mean of numbers $A_1, A_2, \ldots, A_m$ is defined as $(A_1 \times A_2 \times \ldots \times A_m)^{1/m}$

c. If sufficient data exist for two or more significant tumor sites in the same study, the number of animals with at least one of the specific tumor sites under consideration is used as incidence data in the model.

d. Following the suggestion of Mantel and Schneiderman (1975), we assume that mg/surface area/day is an equivalent dose between species. Since to a close approximation the surface area is proportional to the ⅔rds power of the weight as would be the case for a perfect sphere, the exposure in mg/⅔rds power of the body weight/day is similarly considered to be an equivalent exposure. In an animal experiment, this equivalent dose is computed in the following manner:

Let:

L_e = duration of experiment
l_e = duration of exposure
m = average dose per day in mg during administration of the agent (i.e., during l_e)
W = average weight of the experimental animal.

Then, the lifetime average exposure is

$$d = \frac{l_e \times m}{L_e \times W^{2/3}}$$

Often exposures are not given in units of mg/day, and it becomes necessary to convert the given exposures into mg/day. For example, in most feeding studies, exposure is expressed as ppm in the diet. In this case the exposure (mg/day) is derived by: $m=ppm \times F \times r$

where ppm is parts per million of the carcinogenic agent in the diet, F is the weight of the food consumed per day in kgms, and r is the absorption fraction.

In the absence of any data to the contrary, r is assumed to be one. For a uniform diet the weight of the food consumed is proportional to the calories required, which, in turn, is proportional to the surface area or the ⅔rds power of the weight, so that: $m \alpha ppm \times W^{2/3} \times r$ or

$$\frac{m}{rW^{2/3}} \alpha \text{ ppm}$$

As a result, ppm in the diet is often assumed to be an equivalent exposure between species. However, we feel that this is not justified since the calories/kg of food is significantly different in the diet of man vs. laboratory animals, primarily due to moisture content differences. Instead, we use an empirically derived food factor, $f=F/W$, which is the fraction of a species body weight that is consumed per day as food. We use the rates given below.

Species	W	f
Man	70	0.028
Rat	0.35	0.05
Mice	0.03	0.13

Thus, when the exposure is given as a certain dietary concentration in ppm, the exposure in $mg/W^{2/3}$ is

$$\frac{m}{r \times W^{2/3}} = \frac{ppm \times F}{W^{2/3}} =$$

$$\frac{ppm \times f \times W}{W^{2/3}} = ppm \times f \times W^{1/3}$$

When exposure is given in terms of $mg/kg/day = m/Wr = s$ the conversion is simply:

$$\frac{m}{rW^{2/3}} = s \times W^{1/3}$$

When exposure is via inhalation, the calculation of dose can be considered for two cases where (1) the carcinogenic agent is either a completely water-soluble gas or an aerosol and is absorbed proportionally to the amount of air breathed in, and (2) where the carcinogen is a poorly water-soluble gas which reaches an equilibrium between the air breathed and the body compartments. After equilibrium is reached, the rate of absorption of these agents is expected to be proportional to metabolic rate, which in turn is proportional to the rate of oxygen consumption, which in turn is a function of surface area.

Case 1

Agents that are in the form of particulate matter or virtually completely absorbed gases such as SO_2 can reasonably be expected to be absorbed proportional to the breathing rate. In this case the exposure in mg/day may be expressed as: $m = I \times v \times r$ where I is inhalation rate per day in m^3, v is mg/m^3 of the agent in air, and r is the absorption fraction.

The inhalation rates, I, for various species can be calculated from the observation (FASEB, 1974) that 25 gm mice breathe 34.5 liters/day and 113 gm rats breathe 105 liters/day. For mice and rats of other weights, W, (expressed in kg), the surface area proportionality can be used to determine breathing rates (in m^3/day) as follows:

For mice, $I = 0.0345\ (W/0.025)^{2/3} m^3/day$

For rats, $I = 0.105\ (W/0.113)^{2/3} m^3/day$

For humans, the values of 20 m^3/day* is adopted as a standard breathing rate (ICRP, 1977).

The equivalent exposure in $mg/W^{2/3}$ for these agents can be derived from the air intake data in a way analogous to the food intake data. The empirical factors for the air intake per kg per day, $i = I/W$ based upon the previously stated relationships, are as tabulated below:

Species	W	i=I/W
Man	70	0.29
Rat	0.35	0.64
Mice	0.03	1.3

Therefore, for particulates or completely absorbed gases, the equivalent exposure in $mg/W^{2/3}$ is:

$$\frac{m}{W^{2/3}} = \frac{Ivr}{W^{2/3}} = \frac{iWvr}{W^{2/3}} = iW^{1/3}\ vr$$

In the absence of empirical data or a sound theoretical argument to the contrary, the fraction absorbed, r, is assumed to be the same for all species.

Case 2

The dose in mg/day of partially soluble vapors is proportional to the O_2 consumption which in turn is proportional to $W^{2/3}$ and to the solubility of gas in body fluids, which can be expressed as an absorption coefficient r for the gas. Therefore, when expressing the O_2 consumption as $O_2 = k\ W^{2/3}$, where k is a constant independent of species, it follows that $m = k\ W^{2/3} \times v \times r$ or

$$d = \frac{m}{W^{2/3}} = kvr$$

As with Case 1, in the absence of experimental information or a sound theoretical argument to the contrary, the absorption fraction, r, is assumed to be the same for all species. Therefore, for these substances a certain concentration in ppm or μ/m^3 in experimental animals is equivalent to the same concentration in humans. This is supported by the observation that the minimum alveolar concentration, necessary to produce a given "stage" of anesthesia, is similar in man and animals (Dripps, et al. 1977). When the animals were exposed via the oral route and human exposure is via inhalation or vice-versa, the assumption is made, unless there is pharmacokinetic evidence to the contrary, that absorption is equal by either exposure route.

e. If the duration of experiment (L_e) is less than the natural life span of the test animal (L), the slope q_1^*, or more generally the exponent g(d), is increased by multiplying a factor $(L/L_e)^3$. We assume that if the average dose, d, is continued, the age specific rate of cancer will continue to increase as a constant function of the background rate. The age specific rates for humans increase at least by the 2nd power of the age and often by a considerably higher power, as demonstrated by Doll (1971). Thus, we would expect the cumulative tumor rate to increase by at least the 3rd power of age. Using this fact, we assume that the slope q_1^*, or more generally, the exponent g(d), would also increase by at least the 3rd power of age. As a result, if the slope q_1^* [or g(d)] is calculated at age L_e, we would expect that if the experiment had been continued for the full-life span, L, at the given average exposure, the slope q_1^* [or g(d)] would have been increased by at least $(L/L_e)^3$.

This adjustment is conceptually consistent to the proportional hazard model proposed by Cox (1972) and the time-to-tumor model considered by Crump, et al. (1977) where the probability of cancer at age t and dose d is given by $P(d,t) = 1 - \exp[-f(t) \times g(d)]$

4. Calculation of Carcinogenic Potency Based on Human Data. If human epidemiology studies and sufficiently valid exposure information are available for the compound, they are always used in some way. If they show a carcinogenic effect, the data are analyzed to give an estimate of the linear dependence of cancer rates on lifetime average dose, which is equivalent to the factor q_1^*. If they show

* From "Recommendation of the International Commission on Radiological Protection," page 9, the average breathing rate is 10^7 cm^3 per 8-hour work day and 2×10^7 cm^3 in 24 hours.

no carcinogenic effect when positive animal evidence is available, then it is assumed that a risk does exist but it is smaller than could have been observed in the epidemiologic study, and an upper limit of the cancer incidence is calculated assuming hypothetically that the true incidence is just below the level of detection in the cohort studied, which is determined largely by the cohort size. Whenever possible, human data are used in perference to animal bioassay data.

In human studies, the response is measured in terms of the relative risk of the exposed cohort of individuals compared to the control group. In the analysis of this data, it is assumed that the excess risk, or relative risk minus one, R(X)−1, is proportional to the lifetime average exposure, X, and that it is the same for all ages. It follows that the carcinogenic potency is equal to [R(X)−1]/X multiplied by the lifetime risk at that site in the general population. Except for an unusually well-documented human study, the confidence limit for the excess risk is not calculated, due to the difficulty in accounting for the uncertainty inherent in the data (exposure and cancer response).

5. Calculation of Water Quality Criteria. After the value of q_1^* in $(mg/kg/day)^{-1}$ has been determined, the lifetime risk, P, from an average daily exposure of x mg/kg/day is found from the equation $P=q_1^*x$. Therefore, if the lifetime risk is set at $P=10^{-5}$ for calculation purposes, the intake, I, in mg/day for a 70 kg person can be found by the equation: $I=70\times10^{-5}/q_1^*$ The intake of the agent from ambient water is assumed to come from two sources: (1) drinking an average of 2 liters of water per day, and (2) ingesting an average of 6.5 grams of fish per day. Because of accumulation of residues in fish, the amount of the pollutant in fish (mg/kg of edible fish) is equal to a factor R times the water concentration (mg/kg of water). Therefore, the total intake I can be written as sum of two terms: $I(mg/day)=C(mg/l)\times R(l/kg\ fish)\times0.0065\ kg\ fish/day+C(mg/l\times2l/day=C(2+0.0065R)$ where C is the water concentration in mg/l. Therefore, the water concentration in mg/l corresponding to a lifetime risk of 10^{-5} for a 70 kg person is calculated by the formula:

$$C = \frac{70 \times 10^{-5}}{q_1^*(2 + 0.0065\ R)}$$

B. Threshold Effects

1. Use of Animal Toxicity Data (Oral). In developing guidelines for deriving criteria based on noncarcinogenic responses, five types of response levels are considered:

NOEL—No-Observed-Effect-Level
NOAEL—No-Observed-Adverse-Effect-Level
LOEL—Lowest-Observed-Effect-Level
LOAEL—Lowest-Observed-Adverse-Effect-Level
FEL—Frank-Effect-Level

Adverse effects are defined as any effects which result in functional impairment and/or pathological lesions which may affect the performance of the whole organism, or which reduce an organism's ability to respond to an additional challenge.

One of the major problems encountered in consideration of these concepts regards the reporting of "observed effect levels" as contrasted to "observed adverse effect levels". The terms "adverse" vs. "not adverse" are at times satisfactorily defined, but due to increasingly sophisticated testing protocols, more subtle responses are being identified, resulting in a need for judgment regarding the exact definition of adversity.

The concepts listed above (NOEL, NOAEL, LOEL, LOAEL) have received much attention because they represent landmarks which help to define the threshold region in specific experiments. Thus, if a single experiment yields a NOEL, a NOAEL, a LOAEL, and a clearly defined FEL in relatively closely spaced doses, the threshold region has been relatively well defined; such data are very useful for the purpose of deriving a criterion. On the other hand, a clearly defined FEL has little utility in establishing criteria when it stands alone, because such a level gives no indication how far removed the data point is from the threshold region. Similarly, a free-standing NOEL has little utility, because there is no indication of its proximity to the LOEL, since a free-standing NOEL may be many orders of magnitude below the threshold region.

Based on the above dose-response classification system, the following guidelines for deriving criteria have been adopted:

a. A free-standing FEL is unsuitable for the derivation of criteria.

b. A free-standing NOEL is unsuitable for the derivation of criteria. If multiple NOELs are available without additional data on LOELs, NOAELs, or LOAELs, the highest NOEL should be used to derive a criterion.

c. A NOAEL, LOEL, or LOAEL can be suitable for criteria derivation. A well-defined NOAEL from a chronic (at least 90-day) study may be used directly, applying the appropriate uncertainty factor. For a LOEL, a judgment needs to be made whether it actually corresponds to a NOAEL or a LOAEL. In the case of a LOAEL, an additional uncertainty factor is applied; the magnitude of the additional uncertainty factor is judgmental and should lie in the range of 1 to 10. Caution must be exercised not to substitute "Frank-Effect-Levels" for "Lowest-Observable-Adverse-Effect-Levels".

d. If for reasonably closely spaced doses only a NOEL and a LOAEL of equal quality are available, then the appropriate uncertainty factor is applied to the NOEL.

In using this approach, the selection and justification of uncertainty factors are critical. The basic definition and guidelines for using uncertainty factors has been given by the National Academy of Sciences (1977). "Safety Factor" or "Uncertainty Factor" is defined as a number that reflects the degree or amount of uncertainty that must be considered when experimental data in animals are extrapolated to man. When the quality and quantity of experimental data are satisfactory, a low uncertainty factor is used; when data is judged to be inadequate or equivocal, a larger uncertainty factor is used. The following general guidelines have been adopted in establishing the uncertainty factors:

a. Valid experimental results from studies on prolonged ingestion by man, with no indication of carcinogenicity. Uncertainty Factor=10

b. Experimental results of studies of human ingestion not available or scanty (e.g., acute exposure only) with valid results of long-term feeding studies on experimental animals, or in the absence of human studies, valid animal studies on one or more species. No indication of carcinogenicity. Uncertainty Factor=100

c. No long-term or acute human data. Scanty results on experimental animals with no indication of carcinogenicity. Uncertainty Factor=1,000

Considerable judgment must be used in selecting the appropriate safety factors for deriving a criterion. In those cases where the data do not completely fulfill the conditions for one category and appear to be intermediate between two categories an intermediate uncertainty factor is used. Such an intermediate uncertainty factor may be developed based on a logarithmic scale (e.g., 33, being halfway between 10 and 100 on a logarithmic scale).

In determining the appropriate use of the uncertainty factors, the phrase "no

indication of carcinogenicity" is interpreted as the absence of carcinogenicity data from animal experimental studies or human epidemiology. Available short-term carcinogenicity screening tests are reported in the criteria documents, but they are not used either for derivation of numerical criteria nor to rule out the uncertainty factor approach.

Because of the high degree of judgment involved in the selection of a safety factor, the criterion derivation section of each document should provide a detailed discussion and justification for both the selection of the safety factor and the data to which it is applied. This discussion should reflect a critical review of the available data base. Factors to be considered include number of animals, species, and parameters tested; quality of controls; dose levels; route; and dosing schedules. An effort should be made to differentiate between results which constitute a toxicologically sufficient data base and data which may be spurious in nature.

2. Use of Acceptable Daily Intake (ADI). For carcinogens, the assumption of low dose linearity precludes the necessity for defining total exposure in the estimation of increased incremental risk. For non-carcinogens, ADIs and criteria derived therefrom are calculated from total exposure data that include contributions from the diet and air. The equation used to derive the criterion (C) is: $C=ADI-(DT+IN)/[2\ l+(0.0065\ kg \times R)]$ where 2 l is assumed daily water consumption, 0.0065 kg is assumed daily fish consumption, R is bioconcentration factor in units of l/kg, DT is estimated non-fish dietary intake, and IN is estimated daily intake by inhalation.

If estimates of IN and DT cannot be provided from experimental data, an assumption must be made concerning total exposure. It is recognized that either the inability to estimate DT and IN due to lack of data or the wide variability in DT and IN in different states may add an additional element of uncertainty to the criterion formulation process. In terms of scientific validity, the accurate estimate of the Acceptable Daily Intake is the major factor in satisfactory derivation of water quality criteria.

3. Use of Threshold Limit Values or Animal Inhalation Studies. Threshold Limit Values (TLVs) are established by the American Conference of Governmental and Industrial Hygienists (ACGIH) and represent 8-hour time-weighted average concentrations in air that are intended to protect workers from various adverse health effects over a normal working lifetime. Similar values are set by NIOSH (criteria) and OSHA (standards) for 10- and 8-hour exposures, respectively. To the extent that these values are based on sound toxicologic assessments and have been protective in the work environment, they provide useful information for deriving or evaluating water quality criteria. However, each TLV must be carefully examined to determine if the basis of the TLV contains data which can be used directly to derive a water quality criterion using the uncertainty factor approach. In addition, the history of each TLV must be examined to assess the extent to which it has assured worker safety. In each case, the types of effects against which TLVs are designed to protect are examined in terms of their relevance to exposure from water. It must be demonstrated that the chemical is not a localized irritant and that there is no significant effect at the site of entry irrespective of the routes of exposure (i.e., oral or inhalation).

If the TLV or similar value is recommended as the basis of the criterion, consideration of the above points is explicitly stated in the criterion derivation section of the document. Particular emphasis is placed on the quality of the TLV relative to the available toxicity data that normally is given priority over TLVs or similar established values. If the TLV can be justified as the basis for the cirterion, then the problems associated with the estimation of acceptable oral doses from inhalation data must be addressed.

Estimating equivalencies of dose-response relationships from one route of exposure to another introduces an additional element of uncertainty in the derivation of criteria. Consequently, whenever possible, ambient water quality criteria should be based on data involving oral exposures. if oral data are insufficient, data from other routes of exposure may be useful in the criterion derivation process.

Inhalation data, including TLVs or similar values, are the most common alternatives to oral data. Estimates of equivalent doses can be based upon: (1) available pharmacokinetic data for oral and inhalation routes, (2) measurements of absorption efficiency from ingested or inhaled chemicals, or (3) comparative excretion data when the associated metabolic pathways are equivalent to those following oral ingestion or inhalation. Given that sufficient pharmacokinetic data are available, the use of accepted pharmacokinetic models provides the most satisfactory approach for dose conversions. However, if available pharmacokinetic data are marginal or of questionable quality, pharmacokinetic modeling is inappropriate.

The Stokinger and Woodward (1958) approach, or similar models based on assumptions of breathing rate and absorption efficiency, represents possible alternatives when data are not sufficient to justify pharmacokinetic modeling. Such alternative approaches, however, provide less satisfactory approximations because they are not based on pharmacokinetic data. Consequently, in using the Stokinger and Woodward or related models, the uncertainties inherent in each of the assumptions and the basis of each assumption must be clearly stated in the derivation of the criterion.

The use of data pertaining to other routes of exposure to derive water quality criteria may also be considered. As with inhalation data, an attempt is made to use accepted toxicologic and pharmacokinetic principles to estimate equivalent oral doses. If simplifying assumptions are used, their bases and limitations must be clearly specified.

Because of the uncertainties involved in extrapolating from one route of exposure to another and the consequent limitations that this may place on the derived criterion, the decision to disallow such extrapolation and recommend no criterion is highly judgmental and must be made on a case-by-case basis. A decision for or against criteria derivation must balance the quantity and quality of the available data against a perceived risk to the human population.

If the Stokinger and Woodward (1958) approach is used to calculate an ADI from a TLV, the general equation is: $ADI=TLV \times BR \times DE \times d \times A_A/(A_O \times SF)$ where:

ADI=Acceptable daily intake in mg
TLV=Concentration in air in mg/m^3
DE=Duration of exposure in hours per day
d=5 days/7 days
A_A=Efficiency of absorption from air
A_O=Efficiency of absorption from oral exposure
SF=Safety factor following guidelines given above
BR=Amount of air breathed per day; assume 10 m^3

For deriving an ADI from animal toxicity data, the equation is: $ADI=C_A \times D_E \times d \times A_A \times BR \times 70\ kg/(BW_A \times A_O \times SF)$ where:

ADI=Acceptable daily intake in mg
C_A=Concentration in air in mg/m^3
D_E=Duration of exposure in hours per day
d=Number of days exposed/number of days observed
A_A=Efficiency of absorption from air
BR=Volume of air breathed per day in m^3
70 kg=Assumed human body weight
BW_A=Body weight of experimental animals in kg

A_0 = Efficiency of absorption from oral exposure
SF = Safety factor following guidelines given above.

More formal pharmacokinetic models must be developed on a compound-by-compound basis.

It should be noted that the safety factors used in the above formulae are intended to account for species variability. Consequently, the mg/surface area/day conversion factor is not used in the derivation of toxicity based criterion.

C. Organoleptic Criteria

Organoleptic criteria define concentrations of materials which impart undesirable taste and/or odor to water. In developing and utilizing such criteria two factors must be appreciated: the limitations of most organoleptic data and the human health significance of organoleptic properties.

The publications which report taste and odor thresholds are, with very few exceptions, cryptic in their descriptions of test methodologies, number of subjects tested, concentration: response relationships, and sensory characteristics at specific concentrations above threshold. Thus, the quality of organoleptic data is often significantly less than that of toxicologic data used in establishing other criteria. Consequently, a critical evaluation of the available organoleptic data must be made and the selection of the most appropriate data base for the criterion must be based on sound scientific judgment.

Organoleptic criteria are not based on toxicologic information and have no direct relationship to potential adverse human health effects. Although sufficiently intense organoleptic characteristics could result in depressed fluid intake which, in turn, might aggravate a variety of functional disease states (i.e., kidney and circulatory diseases), such effects are not used in the derivation process of organoleptic criteria unless available data would indicate an indirect human health effect via decreased fluid consumption, criteria derived solely from organoleptic data are based upon aesthetic qualities only.

Since organoleptic and human health effects criteria are based on different endpoints, a distinction must be made between these two sets of information. In criteria summaries involving both types of data, the following format is used:

For comparison purposes, two approaches were used to derive criterion levels for ———. Based on available toxicity data, for the protection of public health the derived level is ——. Using available organoleptic data, for controlling undesirable taste and odor quality of ambient water the estimated level is ——. It should be recognized that organoleptic data as a basis for establishing a water quality criteria have no demonstrated relationship to potential adverse human health effects.

In those instances where a level to limit toxicity cannot be derived, the following statement is to be appropriately inserted:

Sufficient data are not available for ——— to derive a level which would protect against the potential toxicity of this compound.

D. Criteria for Chemical Classes

A chemical class is broadly defined as any group of chemical compounds which are reviewed in a single risk assessment document. In criterion derivation, isomers should be regarded as a part of a chemical class rather than as a single compound. A class criterion is an estimate of risk/safety which applies to more than one member of a class. It involves the use of available data on one or more chemicals of a class to derive criteria for other compounds of the same class in the event that there are insufficient data available to derive compound-specific criteria.

A class criterion usually applies to each member of a class rather than to the sum of the compounds within the class. While the potential hazards of multiple toxicant exposure are not to be minimized, a criterion, by definition, most often applies to an individual compound. Exceptions may be made for complex mixtures which are produced, released, and toxicologically tested as mixtures (e.g., toxaphene and PCBs). For such exceptions, some attempt is made to assess the effects of environmental partitioning (i.e., different patterns of environmental transport and degradation) on the validity of the criterion. If these effects cannot be assessed, an appropriate statement of uncertainty should accompany the criterion.

Since relatively minor structural changes within a class of compounds can have pronounced effects on their biological activities, reliance on class criteria should be minimized. Whenever sufficient toxicologic data are available on a chemical within a class, a compound-specific criterion should be derived. Nonetheless, for some chemical classes, scientific judgment may suggest a sufficient degree of similarity among chemicals within a class to justify a class criterion applicable to some of all members of a class.

The development of a class criterion takes into consideration the following:

1. A detailed review of the chemical and physical properties of chemicals within the group should be made. A close relationship within the class with respect to chemical acitivity would suggest a similar potential to reach common biological sites within tissues. Likewise, similar lipid solubilities would suggest the possibility of comparable absorption and tissue distribution.
2. Qualitative and quantitative data for chemicals within the group are examined. Adequate toxicologic data on a number of compounds within a group provides a more reasonable basis for extrapolation to other chemicals of the same class than minimal data on one chemical or a few chemicals within the group.
3. Similarities in the nature of the toxicologic response to chemicals in the class provides additional support for the prediction that the response to other members of the class may be similar. In contrast, where the biological response has been shown to differ markedly on a qualitative and quantitative basis for chemicals within a class, the extrapolation of a criterion to other members of that class is not appropriate.
4. Additional support for the validity of extrapolation of a criterion to other members of a class could be provided by evidence of similar metabolic and pharmacokinetic data for some members of the class.

Based on the above considerations, it may be reasonable in some cases to divide a chemical class into various subclasses. Such divisions could be based on biological endpoints (e.g., carcinogens/non-carcinogens), potency, and/or sufficiency of data (e.g., a criterion for some members of a class but no criterion for others). While no *a priori* limits can be placed on the extent of subclassification, each subclassification must be explicitly justified by the available data.

Class criteria, if properly derived and supported, can constitute valid scientific assessments of potential risk/safety. Conversely, the development of a class criterion from an insufficient data base can lead to serious errors in underestimating or overestimating risk/safety and should be rigorously avoided. Although scientific judgment has a proper role in the development of class criteria, such criteria are useful and defensible only if they are based on adequate data and scientific reasoning. The definition of sufficient data on similarities in physical, chemical, pharmacokinetic, or toxicologic properties to justify a class criterion may vary markedly depending on the degree of structural similarity and the gravity of the perceived risk. Consequently, it is imperative that the criterion derivation section of each document in which a class criterion is recommended explicity address each of the key issues discussed above, and define, as clearly as possible, the

limitations of the proposed criterion as well as the type of data needed to generate a compound-specific criterion.

A class criterion should be abandoned when there is sufficient data availabe to derive a compound-specific criterion which protects against the biological effect of primary concern; e.g., the availability of a good subchronic study would not necessarily result in the abandonment of a class criterion based on potential carcinogenicity.

The inability to derive a valid class criterion does not, and should not, preclude regulation of a compound or group of compounds based on concern for potential human health effects. The failure to recommend a criterion is simply a statement that the degree of concern cannot be quantified based on the available data and risk assessment methodology.

E. Essential Elements

Some chemicals, particularly certain metals, are essential to biological organisms at low levels but may be toxic and/ or carcinogenic at high levels. Because of potential toxic effects, it is legitimate to establish criteria for such essential elements. However, criteria must consider essentiality and cannot be established at levels which would result in deficiency of the element in the human population.

Elements are accepted as essential if listed by NAS Food and Nutrition Board or a comparably qualified panel. Elements not yet determined to be essential but for which supportive data on essentiality exists need to be further reviewed by such a panel.

To modify the toxicity and carcinogenicity based criteria, essentiality must be quantified either as a "recommended daily allowance" (RDA) or "minimum daily requirement" (MDR). These levels are then compared to estimated daily doses associated with the adverse effect of primary concern. The difference between the RDA or MDR and the daily doses causing a specified risk level for carcinogens or ADIs for non-carcinogens defines the spread of daily doses from which the criterion may be derived. Because errors are inherent in defining both essential and maximum tolerable levels, the criterion is derived from dose levels near the center of such a dose range. The decision to use either the MDR or RDA is guided by the spread of the doses and the quality of the essentiality and toxicity estimates.

The modification of criteria by consideration of essentiality must take into account all routes of exposure. If water is a significant source of the MDR or RDA, the criterion must allow for attainment of essential intake. Conversely, even when essentiality may be attained from nonwater sources, standard criteria derivation methods may be adjusted if the derived criterion represents a small fraction of the ADI or MDR. On a case-by-case basis, the modification in the use of the guidelines may include the use of different safety factors for non-carcinogens or other modifications which can be explicitly justified.

F. Use of Existing Standards

For some chemicals for which criteria are to be established, drinking water standards already exist. These standards represent not only a critical assessment of literature, but also a body of human experience since their promulgation. Therefore, it is valid to accept the existing standard unless there is compelling evidence to the contrary. This decision should be made after considering the existing standards vs. new scientific evidence which has accumulated since the standards have been established. There are several instances where the peer review process recommended usage of the present drinking water standards.

Bibliography

Albert, R.E., et al. 1977. Rationale developed by the Environmental Protection Agency for the assessment of carcinogenic risks. Jour. Natl. Can. Inst. 58: 1537.

Cox, C.R. 1972. Regression model and life tables. Jour. Roy. Stat. Soc. B. 34: 187.

Crump, K.S. 1979. Dose-response problems in carcinogenesis. Biometrics. 35: 157.

Crump, K.S. 1980. An improved procedure for low-dose carcinogenic risk assessment from animal data. Jour. Environ. Path. Toxicol. (In press).

Crump, K.S. and W.W. Watson. 1979. GLOBAL 79. A FORTRAN program to extrapolate dichotomous animal carcinogenicity data to low dose. Natl. Inst. Environ. Health Sci. Contract No. 1-ES-2123.

Crump, K.S., et al. 1977. Confidence intervals and test of hypotheses concerning dose-response relations inferred from animal carcinogenicity data. Biometrics. 33: 437.

Doll, R. 1971. Weibull distribution of cancer: Implications for models of carcinogenesis. Jour. Roy. Stat. Soc. A. 13: 133.

Dripps, R.D., et al. 1977. Introduction to Anesthesia, the Principles of Safe Practice. 5th ed. W.B. Saunders Co., Philadelphia, Pennsylvania. p. 121.

Druckrey, H. 1967. Quantitative Aspects of Chemical Carcinogenesis. *In:* R. Turhaut (ed.), Potential Carcinogenic Hazards from Drugs, Evaluation of Risks. UICC Monograph Series, Vol. 7. Springer Verlag, New York.

Federation of American Societies for Experimental Biology. 1974. Biological Data Books, 2nd ed. Vol. III. P.L. Altman and D.S. Dittment (eds.) Federation of American Societies for Experimental Biology. Bethesda, Maryland. Library of Congress No. 72-87738.

Guess, H., et al. 1977. Uncertainty estimates for low dose rate extrapolations of animal carcinogenicity data. Can. Res. 37: 3475.

Interagency Regulatory Liaison Group. 1979. Scientific bases for identifying potential carcinogens and estimating their risks. February 6.

International Commission on Radiological Protection. 1977. Recommendation of the ICRP, Publ. No. 26, adopted January 17, 1977. Pergamon Press, Oxford, England.

Mantel, N. and M.A. Schneiderman. 1975. Estimating "safe levels," a hazardous undertaking. Can. Res. 35: 1379.

McNamara, B.P. 1976. Concepts in Health Evaluation of Commercial and Industrial Chemicals. *In:* M.A. Mehlman, et al. (eds.), Advances in Modern Toxicology, Vol. 1, Part 1. Wiley and Sons, New York. p. 61

National Academy of Sciences. 1977. Drinking Water and Health. National Academy of Sciences, Washington, D.C.

National Cancer Institute. 1976. Guidelines for carcinogen bioassay in small rodents. NCI Carcinogenesis Technical Report Series, No. 1, February, 1976.

Peto, R. 1973. Weibull distribution for continuous-carcinogenesis experiments. Biometrics. 29: 457.

Stephan, C.E. 1980. Memorandum to J. Stara. U.S. EPA. July 3.

Stokinger, M.E. and R.L. Woodward. 1958. Toxicologic methods for establishing drinking water standards. Jour. Am. Water Works Assoc. 50: 517.

U.S. EPA. 1976. National Interim Primary Drinking Water Regulations. Office of Water Supply. EPA 570/9-76-003. U.S. Environ. Prot. Agency.

U.S. EPA. 1980. Seafood consumption data analysis. Stanford Research Institute International, Menlo Park, California. Final report, Task 11, Contract No. 68-01-3887.

Veith, G.D. 1980. Memorandum to C.E. Stephan. U.S. EPA April 14.

Veith, G.D., et al. 1979. Measuring and estimating the bioconcentration factors of chemicals in fish. Jour. Fish Res. Board Can. 36: 1040.

Health Effects Methodology—Authors, Contributors and Reviewers

Jerry F. Stara, ECAO-Cin, U.S. Environmental Protection Agency
Elizabeth L. Anderson, OHEA, U.S. Environmental Protection Agency
Roy E. Albert, N.Y. University Medical School, New York, NY
Patrick R. Durkin, Syracuse Research Corporation, Syracuse, NY
Steven D. Lutkenhoff, ECAO, U.S. Environmental Protection Agency
Robert E. McGaughy, CAG, U.S. Environmental Protection Agency
Charles Ris, OHEA, U.S. Environmental Protection Agency
Lawrence Anderson, CAG, U.S. Environmental Protection Agency
Dolph Arnicar, CAG, U.S. Environmental Protection Agency
Steven Bayard, CAG, U.S. Environmental Protection Agency
Edward Calabrese, University of Massachusetts, Amherst, MA
Thomas Clarkson, University of Rochester, Rochester, NY

Joseph Cotruvo, ODW, U.S. Environmental Protection Agency
Christopher DeRosa, ECAO-Cin, U.S. Environmental Protection Agency
Kurt Enslein, Genesee Computer Center, Inc., Syracuse, NY
Jeffrey Gaba, OGC, U.S. Environmental Protection Agency
Frank Gostomski, OWRS, U.S. Environmental Protection Agency
Daniel Greathouse, HERL-Cin, U.S. Environmental Protection Agency
Joseph Arcos, Tulane University, New Orleans, LA
Dev Barnes, OWRS, U.S. Environmental Protection Agency
David L. Bayliss, CAG, U.S. Environmental Protection Agency
Chao W. Chen, CAG, U.S. Environmental Protection Agency
Herbert Cornish, University of Michigan, Ann Arbor, MI
Kenneth Crump, Science Research Systems, Inc., Ruston, LA
Michael Dourson, ECAO-Cin, U.S. Environmental Protection Agency
John R. Fowle III, CAG, U.S. Environmental Protection Agency
R. John Garner, HERL-Cin, U.S. Environmental Protection Agency
Terrence Grady, ECAO-Cin, U.S. Environmental Protection Agency
Bernard Haberman, CAG, U.S. Environmental Protection Agency
Paul Hammond, University of Cincinnati, Cincinnati, OH
Charalingayya Hiremath, CAG, U.S. Environmental Protection Agency
Dinko Kello, Institute for Medical Research and Occupational Health, Zagreb, Yugo.
Chang S. Lao, CAG, U.S. Environmental Protection Agency
Marvin Legator, University of Texas Medical Branch, Galveston, TX
Jack McGinnity, OTS, U.S. Environmental Protection Agency
Debdas Mukerjee, ECAO-Cin, U.S. Environmental Protection Agency
Ellen O'Flaherty, University of Cincinnati, Cincinnati, OH
Fred Passman, Energy Resources Co., Inc. Cambridge, MA
John F. Risher, ECAO-Cin, U.S. Environmental Protection Agency
Jeffery Rosenblatt, OTS, U.S. Environmental Protection Agency
Samuel Shibko, US FDA, Washington, DC
Harry T. Skalsky, Reynolds Metal Company
Todd W. Thorslund, CAG, U.S. Environmental Protection Agency
Benjamin VanDuuren, N.Y. University Medical School, New York, NY
James R. Withey, National Health and Welfare Canada, Ottawa, Canada
Rolf Hartung, University of Michigan, Ann Arbor, MI
Rudolf Jaeger, Harvard School of Public Health, Cambridge, MA
Arnold M. Kuzmack, CAG, U.S. Environmental Protection Agency
Si Duk Lee, ECAO-Cin, U.S. Environmental Protection Agency
Leland McCabe, HERL-Cin, U.S. Environmental Protection Agency
Myron Mehlman, Mobil Oil Corporation, New York, NY
Jean Munson, University of Cincinnati, Cincinnati, OH
Nancy Othmer, OGC, U.S. Environmental Protection Agency
David J. Reisman, ECAO-Cin, U.S. Environmental Protection Agency
Paula K. Roberson, U.S Environmental Protection Agency
H. Daniel Roth, Roth Associates
Dharm V. Singh, CAG, U.S. Environmental Protection Agency
Robert G. Tardiff, National Academy of Sciences, Washington, DC
Anne W. Trontell, Energy Resources Co., Inc., Cambridge, MA
John Van Ryzin, Columbia University, New York, NY
Ronald E. Wyzga, Electric Power Research Institute

Appendix D—Response to Comments on Guidelines for Deriving Water Quality Criteria for the Protection of Aquatic Life and Its Uses

Introduction

Two versions of the Guidelines were published in the Federal Register for comment. The first version (43 FR 21506, May 18, 1978 and 43 FR 29028, July 5, 1979) was simply published for comment. The second (44 FR 15926, March 15, 1979) was published as part of the request for comments on the water quality criteria for 27 of the 65 pollutants. The second version was meant to be clearer and more detailed than the first, but very similar technically. Since the two versions were so similar, comments on both will be dealt with simultaneously.

Many comments were received that no draft water quality criteria for any of the 65 pollutants should have been issued for public comment until the comments on the first version of the Guidelines had been dealt with adequately and the Guidelines changed appropriately. The comments on the first version were read and the Guidelines were revised in an attempt to make the second version clearer and more detailed than the first. However, an extensive revision of the technical content of the Guidelines was not attempted between the first and second versions because the Agency was preparing water quality criteria based on the Guidelines. The Agency could have avoided this criticism simply by not publishing any version of the Guidelines for comment until March 15, 1979, but this would have greatly reduced the length of time available for people to consider the Guidelines and comment on them. As it was, some people commented that the comment period announced on March 15, 1979, was too short.

1. Comment—The procedures used to derive criteria in the "Red Book" were upheld in court and probably should still be used.

Response—The procedures used in the Guidelines are similar to some of the procedures used to develop criteria in the "Green Book", "Blue Book", and "Red Book". The Guidelines are designed to be more objective and systematic, to deal more adequately with residues, and to incorporate the concept of a minimum data base.

2. Comment—Criteria should be compilations of critically reviewed data with no synthesis or interpretation.

Response—Neither P.L. 92-500 nor the Consent Decree specify the form which a criterion must take. The Consent Decree (para. 11, p. 14) specifies that such criteria "shall state, *inter alia*, recommended maximum permissible concentrations". Adequate precedents have been set in the "Green Book", "Blue Book", and "Red Book" for the form of criteria used in the Guidelines.

3. Comment—The Guidelines and criteria should be developed by a consensus of aquatic toxicologists rather than by EPA personnel only.

Response—EPA certainly wants the Guidelines and the criteria to be as good as possible and as acceptable to as many interested people as possible. To this end, EPA has widely distributed draft versions of the Guidelines and the criteria documents, discussed them with many people, considered the comments received, and made many significant technical changes and editorial revisions. It is questionable whether or not a true consensus could have been reached by any means within the time available. In addition, EPA has a legislative responsibility which it should not delegate to someone else.

4. Comment—The Guidelines should be updated regularly.

Response—The Guidelines are not being promulgated as a regulation or directive. The purpose of presenting these Guidelines is to show how the water quality criteria for aquatic life were derived for the 65 pollutants. If EPA uses these Guidelines again, they will be revised to take into account new data, concepts, and ideas.

5. Comment—The objectives, purpose, and limitations of the Guidelines should be stated.

Response—The introductory portion of the Guidelines has been expanded to address these subjects more fully.

6. Comment—The Guidelines are too ambiguous.

Response—The Guidelines have been revised and rewritten, partly to improve clarity and provide additional details. It is not possible to provide explicit details on all items; in some areas only general guidance can be provided at this time.

EPA attempted to clearly and concisely deal with all issues which might significantly affect the resulting criteria without going into extreme detail on every potential problem. Because numerous judgments must be made, a reasonable amount of experience in aquatic toxicology will be necessary for a person to utilize the Guidelines effectively.

7. Comment—The Guidelines are too complex.

Response—Deriving a water quality criterion is a complex exercise because several different kinds of data and a wide variety of organisms need to be considered. In addition, because data have been generated using various procedures, numerous individual decisions need to be made and the Guidelines attempt to provide guidance concerning decisions that seem to need to be made frequently. The Guidelines are more complex than initially envisioned to help insure that criteria for different pollutants are derived in a reasonably comparable manner. Although the process of deriving a water quality criterion for aquatic life is complex, the Guidelines help organize the process into logical components and steps.

8. Comment—The Guidelines should be more flexible.

Response—The Guidelines are meant to provide guidance and at the same time allow reasonable flexibility. They have been used with quite a variety of pollutants for which the requirements of the minimum data base are satisfied, and they seem to be reasonably appropriate in all cases because the experiences with these substances were a major part of the basis for the Guidelines. If sound scientific evidence indicates that a particular aspect of the Guidelines is not appropriate for a specific substance, then some other more appropriate procedure should be used. However, the Guidelines should not be changed based on individual whim or personal preference.

9. Comment—The Guidelines should take into account synergism and antagonism by a wide variety of factors and the effect of the pollutant on important ecological relationships.

Response—Very little practically useful information is available on these factors in connection with the effects of pollutants on aquatic organisms. Synergism and antagonism are possible between numerous combination of two or more pollutants, and some data indicate that such interactions are not only species specific, but also vary with the ratios and absolute concentrations of the pollutants and the life stage of the species. Pollutants may affect the structure and function of aquatic ecosystems separate from their effects on individual species, but practical applications of such ideas seem very tenuous at this time. Little information is available concerning such effects, and the significance of the available data is questionable. An obviously important ecological relationship is the dependence of higher organisms on lower organisns for food. Even here, the existence of numerous lower species and their adaptability reduces the importance of any individual food species.

10. Comment—The Guidelines should take into account all identifiable effects—beneficial as well as harmful.

Response—Few tests have been conducted to identify beneficial effects of individual pollutants on aquatic organisms. However, beneficial effects are sometimes observed in chronic toxicity tests at concentrations below those that cause adverse effects. Usually in such cases the organisms in low concentrations of the pollutant are longer or heavier or reproduce more that do the controls. Even if such effects are statistically significant, they are not judged as adverse or harmful. On the other hand, a beneficial effect on one species may ultimately be to the detriment of a community if a balance between species is disturbed. Also, a concentration that benefits one species may harm a more sensitive species.

11. Comment—The Guidelines should take into account analytical methodology.

Response—The Guidelines do take into account analytical methodology in the definition of the substance, when necessary, but not in deriving the numerical value of the criterion. Concentrations which cannot be routinely measured accurately can often be measured accurately by nonroutine methods and, more importantly, do sometimes adversely affect aquatic organisms. When aquatic organisms are more sensitive than routine analytical methods, the proper solution is to develop better analytical methods, not to underprotect aquatic life. One use of criteria should be to identify needs in analytical chemistry.

12. Comment—The Guidelines should take into account (a) production and usage patterns, (b) chemical, physical and biological factors pertaining to degradation and fate of pollutants, including properties such as solubility in water, decay rate, persistence, and transformation pathways, and (c) whether or not a criterion is needed for the substance.

Response—Items included in (a) and (b) may be important in deciding whether a criterion is needed for a substance, but the Guidelines are intended to be used after the decision has been made that a criterion is needed. EPA is presently developing principles that can be used to decide whether or not a criterion is needed for a substance and items such as those listed above are probably some of the factors that should be considered when deciding whether or not a criterion is needed. If the toxicity of the chemical is used to evaluate the need for a criterion, the Guidelines may be useful in the collection and interpretation of the available toxicity data.

13. Comment—The Guidelines should take into account costs to states and industries, technological feasibility, and such characteristics of bodies of water as assimilative capacity, dispersal, dissipative factors, dilution, hydrology, mixing zones, and sediment.

Response—Factors such as these should be considered in developing standards, but not in deriving criteria. EPA is presently developing an implementation policy which will describe which of the above factors and which characteristics of the pollutant should be used, and how they should be used, in developing standards.

14. Comment—The Guidelines are not appropriate for establishing a concentration which may be present in an effluent.

Response—The Guidelines are for deriving water quality criteria, not effluent standards nor mixing zone standards nor water quality standards. Water quality criteria will probably be one factor taken into account in the development of water quality standards and toxicity-based effluent standards, but not technology-based effluent standards. EPA is presently developing policies concerning proper use of water quality criteria in various regulatory activities.

15. Comment—The derivation of criteria should be fundamentally a scientific exercise and should not employ subjective judgments.

Response—No exercise which involves the use and interpretation of data can avoid subjective judgment. Indeed, even the generation of scientific data requires subjective judgment, such as how many test organisms to use, what temperature to use, etc. One may decide to accept the recommendations of experts, but this is usually still a subjective decision. In statistics the subjective decisions are made on the basis of probability statements but the final decisions are still subjective judgments. Although the development of the Guidelines and the derivation of criteria cannot avoid subjective

decisions, gross extrapolations, wild assumptions, and novel judgments can be avoided. One can also avoid using large safety factors to "make up" for insufficient data. When some agreement exists between experts, such as on test temperature and duration of tests, the collective opinion can usually be used. EPA feels that the Guidelines do not go too far beyond the state-of-the-art and do not produce criteria by extrapolating far beyond the usefulness of the data.

16. Comment—The Guidelines should not use unproven extrapolations.

Response—EPA feels that the extrapolations used in the Guidelines are reasonable for most pollutants. Probably the most questionable extrapolation is the acute-chronic ratio, but even here an arbitrary ratio is not used. Indeed, the ratio used is usually a mean of experimentally determined acute-chronic ratios for at least three, not just one, species. In addition, the species must include at least one fish and one invertebrate. Even this amount of data does not "prove" the validity of the extrapolation, but it should provide reasonable evidence for or against the use of the ratio with any particular substance. To achieve reasonable criteria without using any extrapolations would require acute and chronic tests with many more species. This would be a high price to pay for disallowing any use of scientific inference in deriving criteria.

The early versions of the Guidelines used adjustment factors and sensitivity factors which were averages derived from data for a wide variety of substances and thus were attempts to make some extrapolations across all substances. The present version of the Guidelines is based on a minimum data base for each individual pollutant and the calculations are essentially pollutant-specific. Thus no extrapolations are made from one pollutant to another.

17. Comment—Laboratory tests overestimate the toxicity of materials because the test organisms are stressed by the artifical conditions.

Response—Laboratory conditions certainly are artificial, but they do not necessarily stress the test organisms. Organisms which survive, grow, and reproduce well in the laboratory cannot be stressed too much. Organisms in a laboratory might be considered pampered because they do not have to compete for food and are not subject to stress due to predators and changing and extreme conditions of turbidity, temperature, flow, and water quality. Also, laboratory organisms are rarely subject to stress from pollutants. Some species probably have longer average life spans in laboratories than they do in field situations.

18. Comment—Laboratory tests underestimate the toxicity of materials because the tests are usually conducted with species which are hardy, adaptable, and insensitive.

Response—Species which are readily adaptable to laboratory conditions are not necessarily insensitive as evidenced by the great range of sensitivities obtained in laboratory tests for some individual pollutants with different species. In fact, once the the proper techniques are developed, a wide variety of species can survive, grow, and reproduce well in laboratories. When the proper techniques are discovered and a species changes form "difficult" to "easy", its sensitivity does not change. Also, some species and life stages which are fragile and must be handled with great care are not particularly sensitive. On the other hand, because so few species have actually been tested in laboratories, species which are more sensitive than any of those tested in laboratories, species which are more sensitive than any of those tested probably exist for most substances.

19. Comment—Laboratory tests are artificial and contrived and do not represent the real world.

Response—Laboratory tests are indeed artificial but they are not contrived to give results that are unnecessarily high or low. Organisms in a laboratory are generally acclimated to water and conditions of constant and desirable quality, whereas in the field they are often subjected to fluctuations and extremes. Organisms in a laboratory do not have to compete for food and are not subject to predators or pollution. Organisms in the field are often exposed to more than one pollutant at a time, with the combinations and concentrations changing often.

It is true that aquatic organisms are usually exposed to instantaneous high concentrations in laboratory tests, but in field situations organisms are often not given much chance to acclimate to spills or short-term discharges. Also, some ameliorating effects occur in field, but not laboratory, situations, but such effects are not always dependable over long periods of time. The concentrations of mitigating anions, suspended solids, and complexing agents are relatively constant in some bodies of water, but not in others. Suspended solids probably do sorb and detoxify significant amounts of some pollutants, but high concentrations of suspended solids also stress some aquatic organisms. In addition, organisms are usually fed in chronic tests, so the test solution contains suspended solids and dissolved organic carbon from the food and fecal matter. Degradation and other transformations are more likely in field situations than in laboratory situations, but degradation products are not always less toxic than the undegraded material. On the other hand, many of these kinds of considerations will probably be taken into account when site-specific criteria and standards are developed under the implementation policy which is being developed by EPA.

20. Comment—Laboratory tests are poor predictors of what will happen in field situations.

Response—If conditions are comparable, laboratory toxicity tests are useful predictors of what will happen in field situations. The usefulness of such predictions will depend on how carefully one accounts for differences between species, water quality, and the form of the pollutant. Extrapolations are much more difficult for some pollutants than for others. Water quality affects the toxicity of some pollutants much more than others, and species differences, even within families, are much greater for some pollutants than for others. If such factors are taken into account, useful predictions are possible. In what is probably the most extensive comparison available of laboratory and field data (Geckler, J. R., et al. 1976. Validity of Laboratory Tests for Predicting Copper Toxicity in Streams. EPA-600/3-76-116. U.S. EPA. Duluth, MN 208 pp.), it was found that effects observed in laboratory exposures were also observed in field exposures. However, avoidance, which was not studied in laboratory exposures, was observed in the field exposures. Laboratory to field comparisons are not simple because several factors must be taken into account, the laboratory test must be conducted well and the field observations and measurements must be extensive. Although adverse effects observed in laboratory tests will usually occur in similar field situations, a problem exists with the bioaccumulation of some persistent substances. For example, PCB's seem to bioaccumulate to much higher levels in some bodies of water than they do in laboratory tests.

21. Comment—The Guidelines should place more emphasis on field information than on laboratory information.

Response—Field information on effects of pollutants on natural populations is acceptable, but the collection of definitive information of this type is high risk and costly. Few studies on the effects of pollution on natural populations provide definitive information because of the multitude of

variables that need to be taken into account. The major advantage of field studies is that conditions are natural (i.e., conditions are not controlled), but this is also the major problem with field studies. With uncontrolled conditions, numerous variables must be taken into account, because any individual variable or combination of variables may affect the results or indeed may be the cause of the results. Therefore, field studies on natural populations usually must last over several seasons and possibly over more than one year to be reasonably sure that proposed cause-and-effect relationships are real.

Another problem with field studies that are based on statistically significant differences is the power of the test. Because natural biological, spacial, and temporal variability is often rather great, a large number of samples is usually required to detect even a moderate change. A field study which purports to show that no change occurred is of no value if the power of the test calculated from the experimental design and observed variability was not high enough.

Because field studies are high cost-high risk ventures, well-designed laboratory tests are usually much more cost-effective for obtaining data on (1) the toxicity of substances to a variety of species and (2) the effect of various water quality characteristics on toxicity. Laboratory tests have been shown to generally be useful predictors of what happens in a field situation, and so it makes little sense to conduct high risk, high cost field studies rather than laboratory tests. Even definitive field studies rarely provide enough information to allow extrapolation of results to other situations, so field studies are more useful in reviewing criteria than in deriving criteria.

22. Comment—Field verification of laboratory tests and of the Guidelines are needed.

Response—Field verification of laboratory tests and of the Guidelines are certainly desirable and provide information that cannot be obtained in a laboratory. Field verification studies do not need to be as risky or as costly as studies on the effects of a pollutant on natural populations because verification studies can be designed (1) as a side-by-side comparison of the results of laboratory tests and field tests or (2) based on existing results of laboratory tests.

23. Comment—EPA should allow criteria to be derived using on-site acute toxicity tests and an application factor.

Response—This approach is usually suggested for developing effluent standards but may be just as applicable to deriving water quality criteria under certain conditions. This approach cannot be used with pollutants whose most sensitive adverse effect is due to residues. Also, it can only be used when the application factor has already been acceptably determined. Finally, acute tests must be determined with either an appropriate range of species or with an appropriate sensitive species. The implementation policy presently being developed by EPA will probably allow the use of appropriate on-site toxicity tests in the development of site-specific criteria and standards.

24. Comment—It is not clear what level of protection is intended.

Response—EPA feels that it is not possible to specify a minimum level of protection that is necessary to "protect aquatic life" or even to protect a particular species for such reasons as:

a. There are so many untested species.

b. Little practically useful information is available concerning synergism, antagonism, ecological relationships, and avoidance.

c. The effect of factors such as temperature on toxicity seems to be species-specific for at least some substances.

d. Information is not available concerning what amount of any effect would be ecologically significant and whether the amount is species-specific.

One possible conclusion is that to protect aquatic life, all species must be adequately protected. A possible extension of this would be that all criteria should be zero because any amount of any pollutant may affect some aquatic organism. Indeed, the assimilative capacity of body of water largely depends on the ability of aquatic life to "process" pollutants and to some extent, any organism which "processes" a pollutant is in some way affected by it.

The apparent level of protection is different for each kind of effect (acute toxicity to animals, chronic toxicity to animals, toxicity to plants, and bioaccumulation) because of the quality and quantity of the available information. An attempt was made to take into account such things as the importance of the effect, the quality of the available data, and the probable ecological relevance of the test methods. Thus it was felt that with regards to toxicity to animals it was probably not necessary to protect all of the species all of the time, but it certainly seems appropriate to protect most of the species most of the time and to protect important species.

On the other hand, the data base on toxicity to aquatic plants is usually very small and a variety of tests and endpoints have been used, especially with algae. Also, little information is available concerning the ecological relevance of the results of any toxicity test with algae in a concentrated test medium, especially because so many species of algae exist in each body of water.

The results of bioconcentration tests with organic chemicals, but not with inorganic chemicals, can apparently be extrapolated reasonably well based on percent lipids from one aquatic animal species to another, at least within commercially and recreationally important species. In addition, the limits on acceptable concentrations in tissue are reasonably well defined in some cases.

These kinds of considerations merely illustrate the complexity of the problem and the necessity for making decisions about each kind of effect individually. In addition, it is important to distinguish between the apparent level of protection provided by the Guidelines and the actual level of protection which will result in a field situation from the use of the implementation policy.

No attempt was made to develop Guidelines which would achieve a predetermined numerical level of protection. For each effect much desirable information is not available, and so it would be misleading to imply a level of sophistication that is not currently possible. EPA believes that the present state-of-the-art in aquatic toxicology does allow some useful conclusions about the ability of a substance to adversely affect aquatic organisms and their uses whenever the requirements of the minimum data base are satisfied, with the full realization that the resulting criterion may be somewhat overprotective or underprotective.

In almost all cases more data would be desirable and so an attempt to reach the "golden mean" will sometimes result incriteria being to high and sometimes too low. One alternative is to derive no criteria until all desirable data are available; this is unacceptable because it will almost always result in no criteria and no protection. The other alternative is to apply safety or uncertainty factors that are inversely proportional to the adequacy of the data base. In the long run this approach would encourage the generation of useful data where it was most needed, but in the short run would require many significant subjective decisions beyond the current state-of-the-art.

25. Comment—The Guidelines should not base criteria on "worst case" assumptions.

Response—The phrase "worst case assumptions" usually refers to the assumption that both the worst water quality and the most sensitive life stage occur at all times. These two assumptions are a natural result of the two concepts that criteria should be constant throughout the year and that aquatic life is not adequatley protected if it is not adequately protected throughout the year. The implementation policy being developed by EPA will determine whether site-specific criteria must be constant throughout the year. If not, then the "worst case assumptions" will not apply. Although the Guidelines might be viewed as making the "worst case assumptions", the implementation policy will determine whether the site-specific water quality criteria and standards will be based on these assumptions.

26. Comment—Safety factors should be used to protect against such things as potential subtle, but important, long term effects.

Response—Pollutants may cause many direct and indirect adverse effects which have not been studied adequately. For instance, some substances may make aquatic organisms more susceptible to disease or other stresses. In spite of such possibilities, the available information indicates that the major possible adverse effects are covered in the Guidelines and that adequate protection will usually be achieved without the use of safety factors. Safety factors would certainly offer additional protection, but the available information does not show that significant additional protection is needed.

Safety factors of from 10 to 1000 are often used to protect people mainly because people feel that people are more important than aquatic organisms and because humans are usually protected on the basis of tests with other species of animals, thus resulting in a greater uncertainty in the applicability of the results. Complete protection can only be achieved by setting all criteria at zero. Unfortunately, even "Mother Nature" sometimes seriously harms large groups of aquatic organisms, such as during droughts or severe winter freezes. EPA feels that complete protection is neither feasible, desirable, nor possible. In addition, aquatic ecosystems can recover from some adverse effects.

27. Comment—The Guidelines do not provide for an adequate margin of safety.

Response—If "margin of safety" is interpreted to mean "safety factor", then the Guidelines do not provide a margin of safety. If the Guidelines are viewed as deriving criteria for a constant quality water, then they provide a margin of safety during those portions of the year during which the most sensitive life stage does not occur. Although some species may occasionally be adversely affected, EPA feels that the Guidelines provide adequate safety because aquatic communities and their uses should not incur any substantial or permanent damage. Whether or not site-specific criteria will have a margin of safety will depend on how they are derived.

28. Comment—Criteria should be set at the least restrictive concentration and states can then apply more restrictive concentrations when necessary.

Response—It is unclear what is meant by the "least restrictive concentration" but presumably it would be a concentration which would not protect very many aquatic communities and their uses. This is contradictory to the concept that criteria are to protect aquatic life and its uses. The implementation policy being developed by EPA will allow site-specific criteria to be higher or lower than the criteria derived using the Guidelines, when adequate information is available.

29. Comment—The Guidelines should produce criteria in the form of a concentration-risk curve with appropriate confidence limits for each kind of effect.

Response—EPA feels that a risk analysis approach is certainly desirable, but far beyond the state-of-the-art at this time. When dealing with safety to humans, only one species is being protected and extrapolations are made far outside the limits of the actual test results, such as to 1 death in 100,000 people. With aquatic life, numerous species need to be protected and extrapolation far beyond the actual data is not readily accepted. In addition, safety or uncertainty factors are more readily accepted when protecting people than when protecting aquatic organisms.

Most aquatic toxicologists are not willing to let criteria for the protection of aquatic life be as dependent on mathematical models, assumptions, and manipulations as on the actual test results. Most people with experience in aquatic toxicology have an intuitive "feel" about how data should be interpreted and the Guidelines are merely an attempt to formalize a resaonable approach. The Guidelines could be written as mathematical algorithms and some approach such as error models could be developed in order to derive confidence limits. However, the algorithms and models would contain many unproven assumptions and, to be worthwhile, would undoubtedly require more data than are usually available. Although such models and algorithms would be acceptable to many statisticians and may be an appropriate future goal, the current Guidelines need to be useable by and comprehensible to current aquatic toxicologists. Most experienced aquatic toxicologists will judge the reasonableness of any set of Guidelines by comparing the resulting criteria for various pollutants with the data available for those pollutants using a "common sense" interpretation of data.

30. Comment—The Guidelines should not use unsound statistical procedures or misuse sound statistical procedures.

Response—EPA has tried to make sure that no statistical procedures are misused in the Guidelines, that no unsound statistical procedures are used, and that the purposes of the calculations are explained adequately.

31. Comment—It appears that geometric means were used instead of arithmetic means in the Guidelines to obtain lower values.

Response—Decisions such as this were made throughout the Guidelines on a case-by-case basis, and none were based on whether the resulting criteria would be higher or lower. The selection of the procedure used to calculate the mean could be based on the distribution of the values in the individual data set. Unfortunately, with small data sets rarely is it possible to reject many possible distributions and with large data sets all possible distributions are often rejected. Because many of the data sets of interest in the Guidelines are small, a reasonable approach is to base the selection of a procedure for calculating the mean on some general principles such as:

a. Sets of ratios and quotients are likely to be closer to lognormal than normal distributions. Thus geometric means, rather than arithmetic means, are used for acute-chronic ratios and for bioconcentration factors.

b. When there are numerous independent possible sources of error for each datum in a set, the error tends to be multiplicative rather than additive. Thus when the acute or chronic toxicity of a substance to a particular species is determined in different laboratories using different batches of organisms, different waters, etc, the geometric means should be used to calculate the species mean value rather than the arithmetic mean.

c. If a set of numbers approximates a lognormal distribution, the logarithms of the numbers will approximate a normal distribution.

d. The distribution of the sensitivities of individual organisms in a toxicity test

is likely to be closer to a lognormal distribution than a normal distribution. Thus the geometric mean, rather than the arithemetic mean, of the upper and lower chronic limits is used.

32. Comment—There should not be any criteria which apply to all bodies of water. Criteria should be specific for individual states, regions, other geographic areas, or bodies of water.

Response—The Guidelines are designed to provide guidance in the collection and interpretation of data concerning the effects of pollutants on aquatic life and its uses. The uses of the resulting criteria will be described by EPA in various regulations. If desired, the Guidelines can be appropriately modified and used to derive a criterion specific to one or more bodies of water or geographic areas if an appropriate data base is available. The critical literature reviews on which the criteria are based will be available for use in the derivation of local, state, or regional criteria. The latitude allowed for deriving local, state, or regional criteria and standards will be determined by the implementation policy presently being developed by EPA.

33. Comment—The Guidelines should result in criteria that are specific for individual species or groups of species (e.g., warmwater and coldwater).

Response—If the necessary data were available, criteria could be derived for any particular species or group of species. It was impractical for EPA to derive criteria for many such groups, but a relatively simple division is freshwater and saltwater organisms because these two groups rarely coexist. Most other possible general divisions of species are faced with the problem that species coexist in various combinations unless the groups are very narrow. In addition, toxicity data are rarely available for very many individual species and so data for representative species must be used, unless appropriate new data are generated. Also, the available data sometimes show wide differences within families so extrapolations from one species to another are often tenuous. Because of these problems, deriving criteria for individual species or groups of species was deemed impractical.

34. Comment—A criterion should be one number, not two.

Response—The two-number criterion is an acknowledgement that aquatic organisms can tolerate short exposures to concentrations that are higher than those they can tolerate continuously. In a two-number criterion, the higher number can assure that short-term fluctuations above the average are not too high, whereas the lower number can assure that the long-term average is not too high. A one-number criterion could be derived by using the existing 24-hour average as an instantaneous maximum. This would certainly provide additional protection, but would provide unnecessary overprotection in most cases. Because a one-number criterion would be more of an approximation than a two-number criterion, one-number criteria would be too high or too low more often and to a greater degree than two-number criteria.

35. Comment—The criteria should not specify sampling schemes.

Response—Criteria should state numerical concentration limits in terms of exposure durations because, everything else being constant, the amount of adverse effect depends on both the concentration of the pollutant and the duration of exposure. Criteria in the Green Book, Blue Book, and Red Book were usually stated as single numbers with no duration expressly stated. The implication was that the criteria were never to be exceeded at any time. Each criterion was apparently and instantaneous maximum. In practice, however, standards derived from these criteria were usually enforced on the basis of 24-hour composite samples. To avoid any ambiguity, the Guidelines specify that a criterion should be explicitly stated in terms of two time frames: an instantaneous maximum and a 24-hour average. However, this is not a specification for a sampling scheme. Standards developed from such a criterion should probably specify a sampling scheme for compliance monitoring, but it would not necessarily be in terms of point measurements and 24-hour averages.

Any sampling scheme used to determine whether or not an ambient concentration exceeds a water quality criterion or a comparable water quality standard should take into account such things as the ratio of the instantaneous maximum and the 24-hour average and the retention time of the body of water because these will primarily determine which portion of the criterion is most limiting in any specific situation. The sampling scheme should probably also take into account the cost of the analyses and results of any past analyses.

36. Comment—The criteria should be stated in terms of time frames longer that an instantaneous maximum and a 24-hour average.

Response—These two time frames were chosen because they would allow the derivation of a criterion which would be less restrictive than, but just as protective as, the previous one-number criterion. These two specific time frames were chosen because they match two kinds of samples that are commonly collected: grab samples and 24-hour composite samples. These specific time frames could probably be changed somewhat without much practical effect, but EPA saw no particular advantage to anyone to introducing novel time periods. For example, for all practical purposes in most situations a 10-minutes average is probably about the same as an instantaneous maximum.

Large increases in the time frames, however, would not provide the same amount of protection. If the instantaneous maximum were changed to a 24- or 96-hour average, and the 24-hour average were changed to a 7- or 30-day average with no change in the numerical limits, the amount of protection afforded aquatic life would fall to an unacceptable level. The longer the time span for the average, the higher the instantaneous concentration could be for short periods of time within that span. Although most chronic tests last for 28-days or longer, some chronic effects may be caused by short exposures of sensitive life stages. If the acute-chronic ratio is small, fluctuations in the instantaneous concentration may even cause acute toxicity, especially for cumulative pollutants, because for some substances the 24-, 48-, and 96-hour acute values do not differ too much.

37. Comment—A two-number criterion will be difficult to enforce.

Response—Criteria are not enforceable. Standards are enforceable. When standards to protect aquatic life are developed, they may or may not be in the same format as the criteria for aquatic life. Few standards are adequately enforced because of the high cost of continuous monitoring. The real value of many criteria and standards is in the design of waste treatment facilities; a two-number criterion should be a better basis for design than a one-number criterion.

38. Comment—The criteria should be expressed to one significant figure, not two.

Response—EPA acknowledges that there is much variability in some of the data and that the range of sensitivites is often great. When the requirements of the minimum data base are satisfied and the data agree reasonably well, two significant figures are not unreasonable. Rounding off to one significant figure could arbitrarily raise or lower the criterion by up to forty percent with no apparent consistent benefits to dischargers, regulators, or aquatic life.

39. Comment—The Guidelines should only use data for species that ought to be protected.

Response—In order to protect commercially and recreationally important species, a wide variety of "unimportant" species must also be protected. Such so-called "unimportant" species include the food organisms all the way to the bottom of the food chain. The "important" species in an aquatic community cannot maintain themselves without the help of primary producers, primary consumers, nitrifiers, dentrifiers, detritivores and saprophytes.

40. Comment—Criteria should not be based on sensitive, short-lived invertebrates.

Response—Many species of invertebrates are short-lived and are not widely distributed. However, these numerous short-lived, local species do serve important functions and should be represented in the data base. This group of organisms needs to be protected even if no one species can be considered important.

41. Comment—Criteria should protect endangered species.

Response—EPA agrees that criteria should protect endangered aquatic species. However, very few toxicity tests have been conducted with endangered species, and it does not appear feasible to require tests with such species. Endangered species are some of the many untested species which should be protected by criteria derived from available data using the Guidelines.

42. Comment—Migratory species are a special problem.

Response—Migratory species should usually be protected by criteria derived using the Guidelines unless such species are unusually sensitive. Migratory species may be especially susceptible to avoidance, but few data are available to compare species on this basis. Avoidance may be a serious latent problem because it might apply to all motile species, rather than just migratory species, and it has not been studied very much.

43. Comment—Estuarine species were ignored.

Response—The term "saltwater organisms" is meant to include estuarine species as well as true marine species.

44. Comment—The classification "invertebrates" includes species that are too dissimilar to be grouped together. These species should be separated into phyla or classes.

Response—The never-ending arguments between the "lumpers" and the "splitters" can only be resolved by considering the advantages and disadvantages of each approach in each situation. The "splitters" can usually argue that obvious differences should be taken into account and it is certainly true that shrimp are different from insects and both are different from worms. It can also be argued that there are significant differences within phyla, classes, and families. Each species could be considered a separate group, if differences between stains are arbitrarily ignored. After the species are split into separate groups, the problem then would be whether to recombine the data to derive one criterion for all species or to derive one criterion for each group. If numerous criteria are derived for a pollutant, how are these to be used to develop standards? Another problem is that unless more data are generated, the greater the number of groups, the less information there is available per group.

The basic question is "What are the important differences that need to be taken into account and how should this be done?" Because there are differences between taxonomic groups, the Guidelines require data on a number of species from a varitety of taxonomic groups. The information of each separate species is treated individually. This approach preserves the differences between species and allows all species to be considered in the development of the criterion. The number of data points is increased and the range of the data is readily apparent. Because "invertebrates" is already a large diverse group and because the range of sensitivities of fish usually overlaps that of invertebrates, little justification exists for not combining all aquatic animals.

45. Comment—Do not extrapolate from freshwater organisms to saltwater organisms or vice versa.

Response—Criteria and absolute toxicity values were not extrapolated from fresh water to salt water, but some relative data were, when it did not appear that factors such as salinity affected the data. The toxicity of some substances apparently is significantly affected by salinity, but most substances seem to have overlapping ranges of toxicity to freshwater and saltwater organisms. However, because these two kinds of organisms rarely inhabit the same body of water simultaneously, separate criteria were derived for each. Even though these two kinds of organisms are physiologically different, they do not seem to be too different toxicologically. Bioconcentration factors and acute-chronic ratios seem to be fairly similar for many freshwater and saltwater species for many pollutants, particularly organic chemicals.

46. Comment—The Guidelines base the criteria only on sensitive species and do not take into account insensitive species.

Response—The Guidelines do not necessarily base the criteria on the data for the most sensitive species. However, an aquatic ecosystem cannot be protected by protecting only the species which are insensitive. Protecting half the species will probably not protect the community. To offer reasonable protection to aquatic life and its uses, each major kind of organism and each major use must be given reasonable protection. In some cases it may in fact be necessary to protect the most sensitive species if it is a highly desirable species.

47. Comment—Species should be tested at their environmental extremes.

Response—Toxicity tests with each pollutant could indeeed be conducted with some or all species under a variety of extreme conditions and the lowest result obtained with a species could be used instead of a mean result. On the other hand, differences between results with different species seem to be much greater, and therefore more important, than the differences between results obtained with one species under different conditions. Furthermore, criteria need not necessarily protect species from all stress under the most extreme conditions, because aquatic communities and populations of individual species can recover from some perturbations.

48. Comment—Only data for species that are widely distributed, representative, critical, indigenous, important, ecologically relevant and sensitive should be used.

Response—Few species would satisfy all of the requirements that have been suggested. As more and more data are obtained with a wider variety of species for any one pollutant, it becomes more obvious that few if any species are atypically sensitive, although that may not be true for aquatic communities which contain very few species. No data exist to show that species in any one key role are toxicologically more sensitive than other kinds of species. Ecologically relevant species and species that have key roles or are relevant to the overall functioning of viable ecosystems are not necessarily toxicologically different from other species. EPA feels that if the available data cover an adequate number and variety of species, it is not necessary to try to identify and conduct tests with all important, sensitive species. In addition, the derivation of a criterion should not be based only on sensitive species, because a knowledge of the range of sensitivities may be useful. For instance, elevated concentrations of a pollutant that produces a narow range of species sensitivities are likely to cause more

damage than elevated concentrations of a pollutant that produces a wide range of species sensitivities.

49. Comment—The distinction between ionizable and unionizable compounds is not very good because some chemicals ionize and reach chemical equilibrium very slowly and others very rapidly.

Response—Most chemicals can readily be classified into one of three groups:

A. Chemicals that ionize, including hydrolyze, at least 90% and reach 90% of equilibrium in less than 8 hours in most surface waters.

B. Chemicals that ionize, including hydrolyze, less than 10% in 30 days in most surface waters.

C. Chemicals that do not fit into either one of the above categories.

For the purpose of the Guidelines, chemicals in the A group should be considered ionizable, chemicals in the B group should be considered non-ionizable, and chemicals in the C group should be classified on a case-by-case basis. Although the distinction between ionizable and unionizable may not be perfect, it is very useful for most chemicals.

50. Comment—Each individual organic compound should be considered separately.

Response—The vast majority of organic chemicals will be considered separately according to the Guidelines except for structurally similar organic compounds that meet all three specifications given in the Guidelines, such as polychlorinated biphenyls and toxaphene.

51. Comment—In-stream water quality criteria are meaningless for substances that are highly insoluble.

Response—The concentration of some substances in sediment may be important separate from the concentration of the substance in the ambient water and for these compounds a sediment quality criterion may be necessary. Generally such compounds can also cause adverse effects if the concentration in the ambient water is too high even if the concentration in the sediment is low. Thus for such compounds both kinds of criteria may be necessary rather than just one or the other.

52. Comment—If a substance is not dissolved, it is not biologically or toxicologically available.

Response—Although this may usually be true, it certainly does not apply to elemental mercury which can be oxidized and methylated to form a very toxic compound. Some organic acids and phenols and hydroxide and carbonate salts of metals have solubilities which differ substantially from one body of water to another.

53. Comment—Criteria for metals should not be for total metal.

Response—Criteria for metals will generally not be based on total metal. Most will be based on total recoverable metal because forms of metals that are not measured in the total recoverable procedure probably are not, and will not become, toxic. A major problem is that some people use a procedure for total recorverable, but report the results as total, metal. In many situations the two results are about the same, but in some cases the results are quite different.

54. Comment—The Guidelines should give more guidance for distinguishing between acceptable and unacceptable data.

Response—The Guidelines contain as much detail on this subject as EPA believes is currently feasible. Items such as the maximum acceptable control mortality and minimum number of test organisms are based on what many aquatic toxicologists generally feel are acceptable, as expressed in published methods. No data should be used in the derivation of a criteria until their quality and acceptability had been reviewed by a competent person. Competent people will occasionally disagree, but that is a fundamental property of subjective decisions.

55. Comment—Only published data should be used.

Response—Peer review is one of many concepts that is better in theory than in practice. Some poor quality data are published and some high quality data are rejected. In addition, publication is not a particularly rapid process. Whether or not data are used should depend on the applicability and quality of the data, not on whether they have been published. Data that are not published should be made readily available if they are used to derive water quality criteria.

56. Comment—All static test are unacceptable

Response—In general, high quality flow-through acute tests are preferable to high quality static acute tests, but static tests are by no means unacceptable. Few data are available to show whether static tests consistently produce acute values lower or higher or different than flow-through tests. Whereas degradation, violatilization, and buildup of metabolic products are more likely to be a problem in static tests, operator and mechanical errors are more likely in flow-through tests. Static acute tests are certainly not unacceptable for most pollutants, but static chronic tests generally are unacceptable because of changes in the toxicant concentrations and the quality of the dilution water during the test.

57. Comment—Data obtained using test organisms that were previously exposed to the pollutant should be used.

Response—Comparisons of results obtained with unexposed and previously exposed organisms should indicate whether or not acclimation has occurred. Generally, data obtained with acclimated organisms should not be used in deriving criteria because acclimated organisms are the exception rather than the norm. Rarely, if ever, can acclimation be depended on to protect organisms in a field situation because concentrations often fluctuate and motile organisms do not stay in one location very long. Data obtained with acclimated organisms may be acceptable for use in deriving some site-specific criteria.

58. Comment—Foreign species should be used to expand the data base.

Response—Foreign species may be representative of indigenous species, but some of them are quite unusual. Data obtained with foreign species may give good indications of indigenous specels that should be used in tests on some pollutants and may identify some potential problems that should be investigated.

59. Comment—If data for brine shrimp are not used, the criteria should not apply to saline waters.

Response—Data obtained using brine shrimp are not used because these organisms are atypical. Although they may not be usually sensitive or insensitive to various pollutants, the species found in North America and used for testing only survive in the Great Salt Lake and in salt ponds near San Francisco Bay. These two habitats are unlike any others in the United States. If criteria were to be derived specifically for the Great Salt Lake or for salt ponds, then data for brine shrimp should be used.

60. Comment—Structure-activity relationships should not be used unless proven.

Response—No provision is made in the Guidelines for the use of structure-activity relationships. Such relationships may soon be well enough understood that they can be used in deriving water quality criteria.

61. Comment—A criterion should not be derived for a pollutant until data are available for a broad range of commercially, recreationally, and ecologically important species. Each species should be acutely and chronically tested under a variety of conditions in a number of different waters.

Response—Except for those people who merely want to stop EPA from deriving any water quality criteria, most people will admit that there must be some reasonable limit as to how much information is necessary concerning any regulatory action. This is as true for deriving water quality criteria, as it is for issuing NPDES permits, submitting PMNs, registering pesticides, etc. All of these regulatory activities deal with potentially significant adverse effects on aquatic organisms and should take into account many of the same possible kinds of adverse effects. Therefore, the data needs for these various activities should probably be somewhat similar, but for each regulatory activity the minimum data requirements also need to take into account the special aspects of the program and practical considerations. Unrealistic data requirements will benefit no one. It is not necessary that all questions be answered before any action is taken. It is only necessary that enough data be available to allow reasonable confidence that the water quality criteria will generally not be too high or too low.

EPA has developed minimum data requirements that describe the amounts and kinds of information that should usually be available if a criterion is to be derived using the Guidelines. When the minimum data requirements are satisfied, it should usually be possible to derive a useful criterion. The requirements take into account many things such as:

a. The existence of some species which are commerically or recreationally important and generally sensitive to some broad classes of pollutants;

b. The range of species for which data are available;

c. The cost of obtaining additional data and the usefulness of the data; and

d. The reasonableness of extrapolations from one species to another within and between groups.

The requirements set forth in the minimum data base are indeed minimal, considering the great varitey of species which exist in most aquatic ecosystems. However, EPA feels that based on the availavble information the routine requirement of more data would probably not improve criteria enough to justify the additional cost.

62. Comment—The mimimum data requirements should depend on the nature of the pollutant.

Response—EPA feels that such an approach may be feasible some time in the future, but would be an unwarrented level of sophistication at this time. For a few pollutants, it may be possible to relax some of the data requirements, but in general this can only be determined after enough data are available to indicate that a special case exists. In other cases the minimum data may indicate that additional data are highly desirable.

63. Comment—Criteria should not be derived if enough data are not available. The alternative procedures which were proposed should not be used.

Response—EPA agrees that a numerical criterion should not be derived if enough appropriate data are not available, except in some special cases. EPA also agrees that the alternative procedures which were proposed should not be used to develop numerical criteria at the present time. However, EPA feels that when a numerical criterion is not derived, a descriptive criterion can be used to accurately reflect the latest scientific knowledge.

64. Comment—The guidelines should give more guidance on relating a criterion to a water quality characteristic.

Response—More detail on this subject has been written into the Guidelines.

65. Comment—If data on the relation of toxicity and water quality are not available, no criterion should be derived.

Response—The purpose of a criterion is to present the best available information, not to ensure that all desirable information is available. Any water quality characteristic may affect the toxicity of each pollutant to some degree and it is never going to be possible to investigate all such interactions for even a few species and pollutants. EPA has adopted a minimum data base requirement for deriving a criterion, but there must be practical limits or no criterion will ever be possible. When the minimum data base requirements are satisfied, a criterion should be derived regardless of speculation that some unstudied relationship exist. When enough good data demonstrate a relation between toxicity and a water quality characteristic, an attempt should be made to use this information in the derivation of a criterion. A major purpose of site-specific criteria is to take into account the effect of local water quality conditions on toxicity.

66. Comment—Do not specify the form that a relationship between toxicity and water quality must take.

Response—The Guidelines allow the use of any set of transformations that fit the data well. The log-log model is given as an example because it seems to fit most of the available data concerning the relationship between hardness and toxicity of metals (the only such relationship for which much quantitative data are available) reasonably well.

67. Comment—The toxicity of metals should not be related to "hardness".

Response—EPA has tried to derive criteria in a form that will (a) adequately protect aquatic organisms and (b) be practically useful. Hardness is used as an easily measured surrogate for a number of interrelated water quality characteristics, such as pH, alkalinity, calcium, and magnesium. Various combinations of these probably affect individual metals differently, but these are all reasonably well correlated with hardness in a wide variety of natural waters. Some waters, such as those impacted by acid mine drainage, obviously are special cases, but they have special problems of their own.

68. Comment—Do not extrapolate slopes for toxicity vs. water quality from fish to invertebrates or from acute values to chronic values.

Response—The Guidelines do not now assume that the acute slope and the chronic slope are similar for a pollutant. On the other hand, there is no reason to believe that invertebrates are more similar than are fish and invertebrates. As explained earlier, the group "invertebrates" does not consist of a collection of species that are similar taxonomically or toxicologically. Some water quality characteristics apparently affect the toxicity of the pollutant, rather than the sensitivity of the organisms. For these kinds of factors, slopes should be the same for different species. Even factors that affect such things as the permeability of membranes may produce similar slopes for a wide variety of species. If each species must be treated separately, no criteria will ever be possible.

69. Comment—Relationships based on only two points should not be used.

Response—Two points certainly do not provide very much information about the shape, slope and position of a line. However, if other information or a reasonable assumption is available concerning the shape of the line, two good data points, spaced at a reasonable interval, can provide very useful information concerning the slope and position of the line. Three appropriately spaced points would certainly be better, and four points would be an ideal minimum.

70. Comment—Do not combine relationships that are and are not statistically significant.

Response—The Guidelines do now specify that relationships should be tested for statistical signficance. A test for statistical significance may be one indication of whether or not a slope is

useful, but such a test cannot be used with just two points and does not take into account such things as the comparability of the data, the quality of the test, and the range of the independent variable. A relationship based on six points may not be as significant as it seems if five of the points are tightly grouped.

71. Comment—The Guidelines should not combine 96-hr LC50 values and 48-hr EC50 values.

Response—Both LC50 values and EC50 values are used to measure acute toxicity of a substance to aquatic organisms. In general, an EC50 can be based on a wide variety of effects, but the Guidelines specify that the only effects to be used for deriving criteria are incomplete shell development, immobilization, and loss of equilibrium. All of these are certainly drastic effects. In a field situation these effects probably often lead to death. Just as the endpoint may be specific for the species, so may be the length of the test. The generally accepted length of an acute test with daphnids is 48 hours, whereas for most species of fish, it is 96 hours. Thus the Guidelines use both 48-hr EC50 values and 96-hr LC50 values because they are the widely accepted durations and endpoints used to measure acute toxicity to specific species.

72. Comment—Shell deposition tests are chronic tests and should not be equated with lethality tests.

Response—"Acute" implies "short" not "death". Many acute toxicity tests do use death for the effect, but many also use non-lethal effects. The shell deposition test is one of many non-lethal acute tests and is generally accepted as a short test compared to the average life span of oysters.

73. Comment—Adjustment factors should not be used to adjust for the length of the test, the technique, and unmeasured concentrations.

Response—All three kinds of adjustment factors have been deleted from the Guidelines. The factor for the length of the test was found to be unnecessary because most tests had been conducted for the standard times usually specified for the individual species. Thus the Guidelines now specify that only data from tests conducted for the time specified for the species should be used to calculate the Final Acute Value.

EPA has found that on the average flow-through acute tests give results slightly lower than do static tests, but the relationship does not seem to be too consistent and may vary from species to species for some pollutants. In addition, on the average results based on measured concerntrations do not seem to be much different from those based on unmeasured concentrations.

However, the results of flow-through tests based on measured concentrations are generally accepted as being better measures of acute toxicity than the results of flow-through tests based on unmeasured concentrations or the results of any static or renewal tests.Therefore, whenever the results of flow-through acute tests in which the concentrations were measured are available, the results of all other kinds of acute tests with that species and pollutant are not used in the calculation of the species mean acute value.

74. Comment—Species sensitivity factors should be pollutant-specific; and average factor should not be calculated for a variety of substances.

Response—EPA agrees. The requirement for acute values for at least eight different species was developed in part to allow for a reasonably good calculation of a mean acute value and a species sensitivity factor for each individual pollutant. A better way of using the acute values for the individual species has been developed, but no extrapolations are made from one pollutant to another.

75. Comment—The distribution of species mean acute values for a pollutant will be truncated if the species cannot be killed or affected by concentrations above solubility.

Response—Some species are so resistant to some pollutants that they cannot be killed or affected in acute tests even by concentrations which are much above solubility. Such "greater than" values cannot be used in the calculation of means and variances for pollutants. When the "greater than" values are for insensitive species and are at or above solubility, the values can be used in the calculation of the Final Acute Value by adjusting the cumulative proportions for all the speices with quantitative values. The shape of the curve at the high end cannot be determined, but the Final Acute Value is more dependent on the species mean acute values and the cumulative probabilities at the low end.

76. Comment—Early life-stage tests with fish should be used interchangeably with life-cycle and partial life-cycle tests with fish.

Response—EPA agrees that early life-stage tests with fish generally give about the same results as comparable life-cycle and partial life-cycle tests. However, because the shorter test is merely a predictor of the longer tests, whenever both kinds of results are available, the results of life-cycle and partial life-cycle tests should be used instead of the results of early life-stage tests.

77. Comment—Appropriate measures of chronic toxicity and appropriate lengths of exposure should be defined.

Response—The descriptions of appropriate chronic tests have been clarified.

78. Comment—The factor of 0.44 should not be used.

Response—It is not now used.

79. Comment—The Final Chronic Value should not be lower than the lowest measured species chronic value, even if chronic data are not available for sensitive species.

Response—Aquatic ecosystems cannot be protected from chronic toxicity by protecting only the insensitive species from chronic toxicity. In the past both arbitrary and experimentally determined application factors have been used to relate acute and chronic toxicity. For a variety of reasons the Guidelines do not use an application factor, but instead use the acute-chronic ratio, which is similar to the inverse of an application factor. Thus the acute-chronic ratio should normally be greater than one. The acute-chronic ratio is to be used with invertebrates as well as fish and is to be an experimentally determined value for each individual pollutant. The acute-chronic ratio should also avoid the confusion as to whether a large application factor is one that is close to unity or one that has a denominator that is much larger than the numerator. The acute-chronic ratio is calculated by dividing the appropriate measure of acute toxicity for the species (as specified in the Guidelines) by the appropriate measure of chronic toxicity for the same species (as specified in the Guidelines).

Some people have confused application factors and safety factors and use of the term "acute-chronic ratio" should help avoid this problem. Acute-chronic ratios are a way of estimating the chronic sensitivity of a species for which no chronic toxicity data are available. Safety factors would provide an extra margin of safety beyond the sensitivity of the species. Safety or uncertainty factors are intended to reduce the possibility of underprotection, whereas acute-chronic ratios are intended to estimate the actual chronic sensitivity of the species to the pollutant. This estimate is just as likely to be too high as it is to be too low. A mean acute-chronic ratio will in fact be too high for half the species and too low for the other half.

When three or more acute-chronic ratios have been determined for a pollutant with both fish and

invertebrates, three patterns have been observed when the individual species are listed in order of their species mean acute values:

a. The ratios randomly differ by a factor of ten or more.

b. The ratio appears to be about the same (within a factor of ten) for all species.

c. Species with higher acute values also have higher acute-chronic ratios.

The available data indicate that fish and invertebrates do not consistently have different acute-chronic ratios and that for some pollutants freshwater and saltwater species have similar acute-chronic ratios.

80. Comment—No application factor should be used unless it is specific for the pollutant, species, and water.

Response—There is no point in using an application factor or acute-chronic ratio or any concept if it does not allow some generalization or extrapolation from one species to another or from one water to another. Not allowing any generalizations or extrapolations would require that much data be generated for each species and each pollutant in each water in which a criterion is necessary. When enough supporting data are available, extrapolations using such things as acute-chronic ratios are cost-effective and scientifically sound.

81. Comment—Additional development of methodology for toxicity tests with aquatic plants is needed.

Response—This is most certainly true. Much other research also is needed, and generally is considered higher priority. EPA hopes that someday all of the additional research that needs to be done will be done. Few pollutants seem to affect aquatic plants at concentrations which do not chronically affect aquatic animals, and it is hoped that this is not an artifact of the test methods currently used.

82. Comment—Data on toxicity to plants should not be used for deriving criteria because plants are more site-specific than animals.

Response—Numerous species of plants, especially algae, exist in most bodies of water. On the other hand, EPA knows of no data to support the contention that the sensitivities of aquatic plants are any more site-specific than those of aquatic animals, or that the range of sensitivities between plants is as great as that for animals. One species may or may not be representative of other species. After the methodology for toxicity tests with aquatic plants is better developed, tests with a wider variety of species would certainly be desirable.

83. Comment—The Final Plant Value should not be the lowest available plant value based on measured concentrations.

Response—EPA adopted the procedure described in the Guidelines for obtaining the Final Plant Value for several reasons including:

a. The methodology for toxicity tests with aquatic plants is not well developed.

b. For only a few pollutants have toxicity tests been conducted with more than a very few species of plants.

c. Little is known about the range of sensitivities of various species of aquatic plants.

d. Based on available data, almost no pollutants are toxic to aquatic plants at the lowest concentrations which are chronically toxic to aquatic animals or cause unacceptable residues.

84. Comment—Residue accumulation in any part of an aquatic ecosystem should be prevented as much as possible.

Response—Accumulation of residues in aquatic organisms only becomes a problem if the concentration of residue is high enough to adversely affect either (a) the organism itself, (b) a consumer of the organism, or (c) the marketability of the organism. Adverse effects on the aquatic organism itself will be detected in acute and chronic toxicity tests. The use of FDA action levels and chronic feeding studies with wildlife are designed to protect the uses and consumers of aquatic organisms.

85. Comment—Bioconcentration factors (BCFs) derived from field data should not be used.

Response—EPA feels that BCFs derived from adequate data, whether they be laboratory data or field data, should be used. More data are necessary to document a BCF from a field exposure than a laboratory exposure, as specified in the Guidelines, but if enough data are available, field BCFs should be used.

86. Comment—Kinetically derived bioconcentration factors (BCFs) should be used.

Response—Kinetically derived BCFs should be used if the bioconcentration test lasted long enough, *i.e.*, to apparent steady-state, to verify that the model (assumptions) used in the calculations actually fits the data for the individual pollutant.

87. Comment—Bioconcentration factors (BCFs) should not be estimated from octanol-water partition coefficients.

Response—The available data seem to indicate a reasonably good relationship for lipid-soluble substances between steady-state BCFs and octanol-water partition coefficients. BCFs estimated from partition coefficients are not used in the Guidelines because measured BCFs are available for all pollutants for which a maximum permissible tissue concentration is available.

88. Comment—Bioconcentration factors (BCFs) are dependent on temperature, food, salinity, stress, and other things.

Response—Many things such as these probably do affect BCFs. Until data are available to show that such effects are important and are not species-specific, little needs to be, or can be, done to take such factors into account when deriving water quality criteria.

89. Comment—Bioconcentration factors (BCFs) should be based only on tissues that are actually eaten.

Response—Although people usually only eat muscle tissue of fish, wildlife usually eat the whole body of fish. The tissues used in the determination of BCFs must be appropriate to the kind of consumer organism or regulatory action. On the other hand, since the BCF for a lipid-soluble substance seems to be proportional to percent lipids, extrapolations can be made on the basis of percent lipids regardless of the tissue.

90. Comment—Chronic toxicity tests with rats and mice should not be used as representative of tests on mammalian wildlife.

Response—Because results of tests on a variety of species are extrapolated to man, it should be just as reasonable to extrapolate from one mammalian species to another mammalian species within certain limits. However, such extrapolations are not now used in the Guidelines; only the results of chronic toxicity tests with wildlife are used to protect wildlife consumers of aquatic life.

91. Comment—Information concerning bioconcentration should only be used if such information is used to protect aquatic organisms, not to protect the marketability of aquatic organisms.

Response—Protection of aquatic organisms must include not only the protection of the existence of aquatic organisms, but also protection of the common uses of aquatic organisms. Commercially important aquatic organisms cannot be considered adequately protected if they cannot be sold. The Guidelines do not use any data pertaining to safety to humans in an attempt to protect human consumers of aquatic organisms. Instead, the Guidelines merely attempt to ensure that residues in aquatic organisms do not exceed FDA action levels so that the uses of commercially and recreationally important species are not restricted by the Food and Drug Administration.

92. Comment—A Final Residue Value calculated from an FDA action level is actually a concentration that will result in the average concentration in some species being at the FDA action level.

Response—This is a good point. A similar situation exists when the calculation is based on a concentration which caused an adverse effect in a chronic wildlife feeding study. In all such cases, the Final Residue Value should be lower, but EPA knows of no non-arbitrary way to determine how much lower the value should be.

93. Comment—The FDA action levels for finished animal feed should not be used.

Response—They are not now used.

94. Comment—Flavor impairment should not be used to derive water quality criteria for aquatic life.

Response—Many of the commercially and recreationally important aquatic orgnaisms are consumted by people. If the flavor is significantly impaired, the use of these species will be adversely affected. Flavor impairment should be considered an effect that can adversely affect the use of aquatic organisms.

95. Comment—The instructions for using the other data are not very detailed and are not mathematical.

Response—EPA has tried to include as much detail in the instructions for using the other data as are currently justified. Extensive detail and mathematical treatment are not deemed realistic at this time bacause so little information is available concerning the various kinds of other data.

96. Comment—The final review of the criteria should allow revision up or down based on sound scientific evidence.

Response—The Guidelines always have allowed revision up or down, but this is now stated explicitly in the Guidelines.

97. Comment—Some bodies of water, such as some USGS benchmark streams and the Houston ship channel, contain concentrations above the criteria for some pollutants and still contain aquatic communities that are diverse, healthy, and productive. Such information should be used in the review of the criteria because it indicates that some criteria are too low.

Response—Rarely are there enough data available to accurately identify the concentrations of pollutants to which aquatic organisms in bodies of water are actually exposed. The sampling scheme should provide a good estimate of the mean and variance of the concentration; a few grab or composite samples cannot provide enough information to characterize the concentrations of pollutants in most bodies of water. The concentrations vary not only with time but also with location at each time, so the samples must be taken where the organisms of interest are located at that time.

A more serious problem concerns the definition of an acceptable aquatic ecosystem. How does one determine if an aquatic ecosystem is healthy or productive? If a diverse system is, by definition, healthy, is it also, by definition, productive? What is the minimum acceptable diversity? What is the minimum acceptable productivity? Should the acceptable levels of diversity and productivity be site-specific? Is a body of water acceptable just because no dead fish are observed. How many pounds of trout should a trout stream produce each year to be considered healthy and productive? How does one treat motile species that may avoid some periodic increases in pollution levels? Is an aquatic ecosystem healthy and productive if the normally edible portion of a consumed species tastes bad or contains excessive residues? Questions such as these indicate the difficulty of quantitatively judging the quality of aquatic ecosystems on the basis of their acceptability or usefulness to man or on any other basis. Although judging bodies of water would be a difficult job, it certainly could be done by a competent group of trained professionals. The point is that it is not as easy a job as some people would like to think. There are also people who feel that various pristine bodies of water should be managed because they are not as productive as they could be.

As mentioned earlier, the criteria documents derive criteria which may be too high or too low for some specific bodies of water. With appropriate modifications the Guidelines can be used to derive criteria for any specific body of water or geographic area. In addition, it is certainly possible that one or more factors which affect the toxicity of one or more pollutants may not have been studied very throughly or even identified yet. The criteria are based on the best available information and the state-of-the-art of aquatic toxicology, but it is always possible that something important has not been adequately studied by regulators, discharges or academia.

Appendix E.—Responses to Public Comments on the Human Health Effects Methodology for Deriving Ambient Water Quality Criteria

I. Introduction

On March 15, 1979, the U.S. Environmental Protection Agency (EPA) announced the availability for public comment of the proposed methodology for the derivation of ambient water quality criteria for the protection of human health. The public comments were resolved in three phases.

First, comments relating to policy issues were resolved in an initial screening/disposition by Agency personnel. Second, a peer review workshop was conducted and involved Agency personnel, contractors, and recognized scientists. The group evaluated all issues pertaining to the derivation of criteria for non-carcinogens, and third, a similar workshop was held to review all issues relating to the derivation of criteria for carcinogens.

The following report presents the resolutions of the public comments by the EPA after considering the advice of the meeting attendees. While the EPA greatly appreciates the contribution of these individuals and acknowledges their substantial assistance in resolving many difficult questions, the EPA accepts full responsibility for the positions outlined in this document. (Note: Comments addressing similar issues were appropriately compiled and summarized under each issue.)

Comments Resolved in Initial Screening

Issue 1

Comment summary: The water quality criteria documents should provide information and/or guidelines for deriving standards from criteria.

Response: The water quality criteria documents contain information which will be useful in developing standards (e.g., current levels of exposure). However, in developing standards, many additional factors not directly related to criteria must be considered. It would be more appropriate to compile and to analyze this information as part of the standard-setting process rather than to include it in the criteria documents. Guidelines will be issued separately since the development of the standard includes use designation with a commensurate criteria value.

Issue 2

Comment summary: Water quality criteria should consider or be limited by technological achievability, cost/benefit analysis, limits of detection, and environmental fate.

Response: The distinction between criteria and standards must be recognized. For non-carcinogens, ambient water quality criteria are estimates of concentrations in water which will not result in either adverse human health effects (criteria based on toxicity) or unplesant taste or odor

(organoleptic criteria). For carcinogens, criteria are estimates of concentrations of individual compounds in water which will result in specified increases in the lifetime risk of developing cancer. By definition, these criteria exclude considerations of technological achievability, cost/benefit analysis, limits of detection, and environmental fate, as appropriate within the authority of The Clean Water Act [33 U.S.C. 1314(a)]. These factors are more properly considered in the standard-setting process.

Issue 3

Comment summary: The validity of a single criteria for all bodies of water is questionable. Criteria should be site specific an/or use specific.

Response: In the standard-setting process, criteria may be modified based upon site specific or use specific considerations.

Issue 4

Comment summary: Even if there is insufficient data, some criteria must still be developed for "highly hazardous compounds."

Response: If there is sufficient information to indicate that a compound is "highly hazardous," there should be sufficient information to derive a criteria. Conversely, if insufficient data are available, by definition no criteria can be derived.

Issue 5

Comment summary: Criteria should be derived only for persistent compounds or for compounds which present a clear hazard to humans.

Response: Criteria can be derived for any compound on which sufficient information is available. By definition, criteria are independent of persistence or current levels of exposure.

Issue 6

Comment summary: Criteria should be developed to protect terrestrial wildlife as well as humans and aquatic organisms.

Response: Because of the great number of diverse wildlife species and differences in their habitat, diet, and behavior, it is unlikely that a single criteria could be developed to protect all wildlife species from a given contaminant. The EPA is currently assessing possible approaches to developing a valid methodology for deriving wildlife criteria. Until a specific wildlife criteria methodology is developed, the proposed aquatic life and human health effects criteria should serve as interim levels for the protection of wildlife.

Issue 7

Comment summary: Criteria should be derived by an independent scientific panel and not by the EPA.

Response: The EPA has a legislative mandate to derive ambient water quality criteria and must accept the final responsibility for this process. However, the EPA has solicited the advice of many independent scientists in this effort. It should be noted that the consensus of the peer review committees has been considered and generally followed by the EPA. Nonetheless, the responsibility for the criteria rests solely with the Agency.

Issue 8

Comment summary: The ambient water quality criteria are not sufficiently protective of special groups at risk.

Response: In most cases, each document contains a specific section on special groups at risk. This is intended to serve as a notice to individuals or agencies using the criteria; that the derived criteria may not be sufficiently protective in all applications. If sufficient data are available, information in the section on special groups at risk could be used to modify the criteria during the standard-setting process.

Issue 9

Comment summary: Comments express concern with the failure of the criteria to specifically address possible toxicant interactions.

Response: The importance of toxicant interactions in the environment cannot be disregarded. Each document attempts to summarize the available data on such interactions. However, since the composition of toxicants is likely to vary substantially in different areas, a general approach modifying criteria based upon toxicant interactions is not available at this time. Further, the limitations of valid approaches for dealing with interactions in multi-toxicant mixtures should be recognized.

Issue 10

Comment summary: Because of the uncertainties involved in deriving criteria, the criteria should be limited to only one significant figure.

Response: The number of significant figures used to express the criteria is an admittedly arbitrary decision. The EPA recognizes the inexactitude of these numbers.

III. Comments on Non-Carcinogens

A. Criteria for Chemical Classes

Issue 1

Comment summary: Two basic approaches were taken in the documents on chemical classes when sufficient data were not available on all members in a class:

(a) Criteria were derived for individual chemicals on which sufficient data were available and no criteria were recommended for other chemicals in the class.

(b) A criteria was derived for all or some chemicals in the class based on toxicity data on one or a few members of the class.

Alternative "a" can be criticized for "allowing" contamination by "probably hazardous compounds" (reasoning by chemical analogy). Alternative "b" can be criticized for applying a general criteria to a specific compound for which data are not available.

What guidelines with justifications can be given for selecting either alternative? What other alternatives might be considered?

Response: The initial methodology did not adequately address the problems associated with deriving class criteria. The following section has been added to the methodology and serves as a useful guide in the criteria derivation process.

A chemical class is broadly defined as any group of compounds which are considered in a single risk assessment document. In criteria derivation, isomers are regarded as a chemical class rather than as a single compound. A class criteria is an estimate of risk/safety which applies to more than one member of a class, and involves varying degrees of extrapolation from available data on some members of the class to other class members on which sufficient data are not available to derive a compound-specific criteria (i.e., a criteria based on data solely on the specific chemical for which the criteria is derived).

A class criteria usually applies to each member within the class rather than to the sum of the compounds within the class. While the potential hazards of multiple toxicant exposure are not to be minimized, a criteria, by definition, most often applies to an individual compound. Exceptions may be made of complex mixtures which are produced, released, and toxicologically tested as mixtures (e.g., toxaphene and PCBs). For such exceptions, some attempt should be made to assess the effects of environmental partitioning different patterns of environmental transport and degradation on the validity of the criteria. If these effects cannot be

assessed, an appropriate statement of uncertainty should accompany the criteria.

Because relatively minor structural changes within a class of compounds can have pronounced effects on their biological activities, class criteria should be avoided. Whenever sufficient toxicologic data are available on a chemical within a class, a compound specific criteria for that chemical should be developed. Nonetheless, for some chemical classes, scientific judgment may suggest a sufficient degree of similarity among chemicals within a class to justify a class criteria applicable to some or all members within a class. Such a judgment should be influenced by a perceived risk to the human population if a class criteria was not derived.

The development of a class criteria should take into consideration the following:

(a) A detailed review of the chemical and physical properties of chemicals within the group should be available. A close relationship within the class with respect to chemical activity would suggest a similar potential to reach common biological sites within tissues. Likewise, similar lipid solubilities would suggest the possibility of comparable absorption and tissue distribution.

(b) The amount of qualitative and quantitative data for chemicals within the group should be examined. Obviously adequate toxicological data on a number of compounds within a group would provide a more reasonable basis for extrapolation than minimal data on one or two chemicals within a group.

(c) Similarities in the nature of the toxicological response to chemicals in the class provides additional support for the prediction that the response to other members of the class may be similar. In contrast, where the biological response has been shown to differ markedly on a qualitative and quantitative basis for chemicals within a class, extrapolation of a criteria to other members of that class may not be appropriate.

(d) Additional support for the validity of extrapolation of a criteria to other members of a class could be provided by evidence of similar metabolic and pharmacokinetic data, if available, for some members of the class.

Based on the above considerations, it may be reasonable to divide a chemical class into various subclasses. Such divisions could be based on biological endpoints (e.g., carcinogens/non-carcinogens), potency, and/or sufficiency of data (e.g., a criteria for some members of a class but no criterion for others). While no *a priori* limits can be placed on the extent of subclassification, each must be explicitly justified by the available data.

Class criteria, if properly derived and supported, can constitute valid scientific assessments of potential risk/safety and can be used in establishing appropriate standards. Conversely, the development of a class criteria from an insufficient data base can lead to serious errors in underestimating or overestimating risk/safety and should be rigorously avoided. Although scientific judgment has a proper if not totally explicable role in the development of class criteria, such criteria will be useful and defensible only if they are based on adequate data and scientific reasoning rather than intuition. The lack of data on dissimilarity cannot be used as the basis of a class criteria. Further, the definition of sufficient data on similarities in physical, chemical, pharmacokinetic, or toxicologic properties to justify a class criteria may vary remarkably depending on the degree of superficial structural similarity and the gravity of the perceived risk. Consequently, it is imperative that the criterion derivation section of each document in which a class criterion is recommended explicitly address each of the key issues discussed above and define, as clearly as possible, the limitations of the proposed criteria and the type of data necessary to generate a compound-specific criterion.

Class criteria should be corrected when sufficient data become available to derive a compound-specific criterion that protects against the biological effect of primary concern. The availability of a good subchroni study would not result necessarily in the abandonment of a class criteria based upon potential carcinogenicity.

The inability to derive a valid class criteria does not and should not preclude regulation of a compound or group of compounds based upon concern for potential human health effects. The failure to recommend a criterion is simply a statement that the degree of concern cannot be quantified from the available data and risk assessment methodology.

Issue 2

Comment summary: To what extent can "guilt by association" be used to derive a cancer-based criteria for a compound which has been tested for carcinogenicity with negative results [e.g., bis(2-chloroisopropyl) ether in the Chloroalkyl Ethers Ambient Water Quality Criteria Document].

Response: As stated in the response to Issue 1, "guilt by association" is only an extremely limited role in criteria derivation process.

B. Organoleptic Criteria

Issue 3

Comment summary: Whenever organoleptic criteria are derived, corresponding toxicity based criteria should be derived if possible.

Response: The Agency agrees. Since organoleptic criteria are not based on toxicologic information and have no direct relationship to potential adverse human health effects, both organoleptic and toxicity based criteria are provided whenever possible.

Issue 4

Comment summary: The quality of organoleptic criteria should be assessed in terms of experimental design and statistical analysis.

Response: The revised methodology recognizes the limitations of most organoleptic data:

With very few exceptions, the publications which report taste and odor thresholds are cryptic in their descriptions of test methodologies, number of subjects tested, concentration/response relationships, and sensory characteristics at specific concentrations above the threshold. Thus the quality of the data is usually worse than the toxicological data used for the setting of other criteria. Consequently, a clear critical evaluator of the available data on a compound's organoleptic characteristics should appear in the criteria document.

Issue 5

Comment summary: Criteria based on organoleptic properties should not be considered equal to criteria based on toxicologic effects.

Response: The revised methodology makes a clear distinction between organoleptic and toxicity based criteria. The use of the criteria in the regulatory process should reflect an appreciation of this distinction.

C. Naturally Occurring Compounds

Issue 6

Comment summary: Background levels should be defined in terms of the quality of the data base and geographical/seasonal variations.

Response: The documents summarize data on background levels of naturally occurring compounds and include information on seasonal and/or geographical variation when available.

Issue 7

Comment summary: A distinction should be made between natural and anthropogenic background.

Response: An attempt is made, with extreme difficulty, in the exposure section of the documents to differentiate between natural and anthropogenic background. However, background levels cannot be used directly to modify the criteria. By definition, criteria should not consider current levels of exposure but are estimates of safe level or incremental risk level exposures. Background levels, both natural and anthropogenic, should be considered if the criteria are used to promulgate standards.

Issue 8

Comment summary: What is the minimum data base needed to define a compound as essential?

Response: As indicated in the revised methodology, elements will be accepted as essential if the National Academy of Sciences (NAS) Food and Nutrition Board or a comparably qualified group declares them as such. Elements not yet determined to be essential, but for which supportive data on "essentiality" exists, were recommended to be reviewed by a joint EPA/NAS committee.

Issue 9

Comment summary: How can essentiality be used to modify a criteria?

Response: The following additions have been made to the revised methodology in response to this question:

In order to be useful in modifying toxicity/carcinogenicity based criteria, essentiality must be quantified either as a recommended daily allowance (RDA) or minimum daily requirement (MDR). These levels must be compared to estimated daily doses associated with the adverse effect of primary concern. The difference between the RDA or MDR and the daily doses causing a specified risk level for carcinogens or acceptable daily intake (ADI) for non-carcinogens defines the "window" of daily doses from which the criteria should be derived.

Because errors are inherent in defining both essential and maximum tolerable levels, the criteria should be derived from dose levels near the center of such a dose range. The decision to use either the MDR or RDA will be guided by the size of the window and the quality of the essentiality and toxicity estimates.

The modification of criteria by consideration of essentiality must include all routes of exposure. If water is a significant source of the MDR or RDA, the criteria must allow for attainment of essential intake. Conversely, even when essentiality may be attained from non-water sources, standard criteria derivation methods may be adjusted if the derived criterion represents a small fraction of the ADI or MDR. On a case-by-case basis, the modification in the use of the guidelines may include the use of different safety factors for non-carcinogens or other modifications which can be explicitly justified.

D. Use of NOAELs/NOELs

Issue 10

Comment summary: NOELs and related effect terms should be defined more clearly in the methodology.

Response: In the revised methodology, the following additions have been made to clarify the use of these terms:

In developing guidelines for deriving criteria based on non-carcinogenic responses, five types of response levels are considered:

NOEL—No-Observed-Effect-Level
LOEL—Lowest-Observed-Effect-Level
NOAEL—No-Observed-Adverse-Effect-Level
LOAEL—Lowest-Observed-Adverse-Effect-Level
FEL—Frank-Effect-Level

In the above terms, adverse effects are defined as any effect resulting in functional impairment and/or pathological lesions that may affect the performance of the whole organism, or which contributes to a reduced ability to respond to an additional challenge. The word lowest refers to the incidence of the effect in the tested population. It should be noted that LOELs, NOAELs, and LOAELs refer to exposure levels or dosage zones which are experimentally defined by upper and lower exposure levels. NOELs and FELs, however, are not defined at the lower and upper exposure levels, respectively.

Issue 11

Comment summary: Considerations of experimental design should be more explicitly/quantitatively considered in the criteria derivation process.

Response: The development of a rigid system for considering experimental design in criteria derivation would limit the use of scientific judgment. The section of the methodology dealing with the derivation of toxicity based criteria has been extensively revised to allow for the maximum use of scientific judgment in selecting safety factors based on both the quality of the individual study and the weight of the supporting scientific data.

E. Safety or Uncertainty Factors

Issue 12

Comment summary: Can the guidelines for applying safety factors be clarified or developed in greater detail to minimize inconsistencies without impairing scientific judgment?

Response: The following additions have been included in the methodology to allow for the use of greater judgment in the application of safety factors, while also requiring more explicit justification for the use of any uncertainty factor:

The justifications for the various safety factors can become very restrictive if they are not employed with care and judgment. This is the case especially in those instances where the data do not completely fulfill the conditions for one category of uncertainty factor and appear to be intermediate between two categories. Given the uncertainties in the entire process, it is more appropriate to set the operative uncertainty factor at some intermediate value on a logarithmic scale (e.g., 32, being halfway between 10 and 100 on a logarithmic scale). If intermediate values for uncertainty factors are more representative of actual conditions, then they are used.

In the selection of the uncertainty factor approach, "no indication of carcinogenicity" is interpreted as the absence of carcinogenic data from animal studies or human epidemiology. Short-term carcinogenicity screening tests are considered in the criteria documents, and are used in the derivation of numerical criteria and are used to rule out the uncertainty factor approach.

Because of the high degree of judgment involved in the selection of a safety factor, the criteria derivation section of each document must provide a detailed discussion and justification for both the selection of the safety factor and the data for which it is applied. This discussion should reflect a critical review of the total data base. Factors to be considered include: number of animals tested, parameters tested, species tested, quality of controls, dose levels, route, dosing schedules, etc. An effort should be made to differentiate between coherent results which form a toxicologically valid data base and data which may be spurious in nature.

Issue 13

Comment summary: What, if any, safety factor should be used when deriving criteria from a threshold limit value (TLV).

Response: The safety factor used when deriving criteria from a TLV must

depend on the quality of the data base on which the TLV is based, considerations of uncertainties involved in extrapolating data from inhalation to oral exposures, and the quality of the additional supporting data.

F. Related NOAEL Issues

Issue 14

Comment summary: Can/should concentration response curves representing a "full range of effects" be used in deriving criteria?

Response: No available system for utilizing concentration response curves in representing a full range of effects for deriving criteria has been developed. If such a system does become available, it will be assessed by the Agency.

Issue 15

Comment summary: When more than one method is available to derive a non-carcinogen criteria (e.g., 2-year chronic, 90-day, TLV), can guidelines be given for selecting the most appropriate method?

Response: As indicated in the revised methodology, criteria can be based on several different types of data (e.g., studies on humans or experimental animals, subchronic or chronic exposure periods, oral or inhalation exposure routes, TLVs or similar standards). Specific guidelines for selecting a particular study or approach have not been recommended because of the many judgmental factors which are involved. As indicated in the methodology, the criteria derivation section must specifically state the reasons for selecting the approach and study used to derive the criteria.

Issue 16

Comment summary: The approach used to derive criteria for non-carcinogens may not adequately address the question of whether children are at greater risk than adults.

Response: When specific data are available on women or children as groups at increased risk, it should be stated in the document and discussed in the criteria derivation section, but should be used to modify the criteria only if sufficient specific data are available. This is a highly judgmental decision which must be made on an individual case.

Issue 17

Comment summary: Criteria based on carcinogenic effects might not be adequate to protect humans from mutagenic, teratogenic, or other toxic effects.

Response: With very few exceptions, criteria based on carcinogenicity are probably protective for other toxic effects. However, alternative criteria can be derived based on non-carcinogenic effects on a case-by-case basis if there is any doubt of the level of protection offered by the cancer based criteria.

G. Alternative Approaches to the Development of Criteria for Non-Carcinogens

Issue 18

Comment summary: Is there a reasonable way to use multiple NOEL/NOAELs to derive criteria?

Response: The revised methodology clearly indicates that all toxicity must be considered in deriving criteria and multiple NOELS/NOAELs are used. A detailed mathematical approach using multiple NOEL/NOAEL data has not been developed or accepted by the scientific community.

Issue 19

Comment summary: Is there a reasonable way to use dose/response data to derive criteria?

Response: Mathematical models for deriving non-cancer based criteria are available. However, they have not gained wide acceptance in human risk assessment. Until various models have been reviewed in greater detail, the Agency uses the current approach, based on that recommended by the National Academy of Sciences, as the most appropriate.

Issue 20

Comment summary: Confidence intervals or a range should be used in deriving criteria.

Response: A workable method for using confidence intervals in deriving non-cancer based criteria has not been developed. Given the many uncertainties involved in this process, the use of confidence intervals could be misleading in simply considering problems in statistical variation without considering problems in species to species conversion. Safety factors are an accepted procedure and are used to consider both problems in statistical variability as well as problems in species to species conversions and individual susceptibility.

H. Exposure

Issue 21

Comment summary: Should non-cancer criteria be based on all sources of exposure because they are derived from estimates of ADIs (acceptable daily intake) which define *total* daily acceptable doses for man?

Response: The methodology has been revised so that estimates of total exposure can be considered in deriving criteria. Estimates of water and fish consumption are used to derive the criteria. However, the criteria levels can be modified by considering all routes of exposure in the standard-setting process. This approach may be particularly desirable because exposure conditions will probably vary markedly on a regional basis.

Issue 22

Comment Summary: If sufficient data are not available on all sources of exposure, can any reasonable assumptions be made to factor in all sources of exposure or can/should an additional "uncertainty" factor be used?

Response: When no reasonable estimate can be made of contributions from non-fish diet and from air, it can be assumed that one-half of the exposure comes from water and fish and one-half comes from other sources. This is equivalent to using an additional safety factor of 2. It is recognized that the inability to quantify all sources of exposure adds an additional element of uncertainty to the criteria.

I. General Issues

Issue 23

Comment Summary: With the exception of recommending "good scientific judgment," can specific guidelines be given for accepting or rejecting a study or set of studies as a data base for criteria derivation?

Response: Specific guidelines cannot be given for accepting or rejecting studies. Scientific judgment must be exercised in view of the magnitude of the total evidence on the chemical or chemicals under consideration. Chronic data and appropriate exposure routes are most desirable.

Issue 24

Comment Summary: Is there a need to individualize the criteria derivation process so that the "nature of the toxic agent and its mechanism of action" can be more explicitly considered? If so, how can this be accomplished?

Response: The criteria derivation process does consider as specifically as possible the nature of the toxic agent and, when known, the mechanism of action.

Issue 25

Comment Summary: Is the Stokinger-Woodward model adequate for converting inhalation dose data to "equivalent oral doses," or should a more sophisticated approach be used?

Response: The derivation of water quality criteria from inhalation data is an admittedly tenuous process. The

following guidelines have been added to the methodology:

Estimating equivalencies of dose/response relationships from one route of exposure to another introduces an additional uncertainty in the derivation of criteria. Consequently, whenever possible, ambient water quality criteria should be based on data involving oral exposures. Even with oral data, differences in dosing schedules and vehicles can be problematic. If oral data are insufficient, data from other routes of exposure may be used in deriving water quality criteria.

Inhalation data, including TLVs or similar values, are the most common alternative to oral data. Estimates of equivalent doses can be made on the basis of extensive pharmacokinetic data for oral and inhalation routes, on the basis of measurements of absorption efficiency from ingested or inhaled chemical, or on the basis of comparative excretion data when the metabolic pathways can be established to be equivalent after oral or inhalation dosing. When sufficient pharmacokinetic data are available, the use of accepted pharmacokinetic models provides the most satisfactory approach for dose conversions. However, if the pharmacokinetic data are marginal or of questionable quality, pharmacokinetic modeling is inappropriate and may result in an artifical sense of exactitude.

The Stokinger and Woodward (1958) approach, or similar models which are based on assumptions of breathing rate and absorption efficiency, can be used as alternatives when data are not sufficient to justify pharmacokinetic principles. Consequently, in using the Stokinger and Woodward or related models, the uncertainties inherent in each of the assumptions and the basis of each assumption should be clearly stated in the derivation of the criteria.

The use of data involving other routes of exposure to derive water quality criteria should not be ruled out. However, as with inhalation data, an attempt should be made to use accepted toxicologic and pharmacokinetic principles to estimate equivalent oral doses. If simplifying assumptions are used, their bases and limitations must be clearly specified.

Because of the uncertainties involved in extrapolating from one route of exposure to another and the consequent limitations that this may place on the derived criteria, the decision to disallow such extrapolation and recommend no criterion is highly judgmental and must be made on a case-by-case basis. Such a decision should balance the quantity and quality of the available data against a perceived risk to the human population if no criteria is derived.

Issue 26

Comment Summary: Can/should criteria be qualitatively or quantitatively ranked in terms of their scientific strength of validity? How could such a ranking system be developed?

Response: The Agency is presently assessing the quality of the data base supporting individual criteria. This will eventually result in the development of a ranking system of all the priority pollutants.

IV. Response to Public Comments on Methodology to Derive Water Quality Criteria

The Carcinogen Assessement Group (CAG) and the Environmental Criteria and Assessment Office-Cincinnati (ECAO-Cin.) of the U.S. Environmental Protection Agency (EPA) has reviewed in detail the public comments on EPA's methodology to derive water quality criteria for carcinogens. Since the majority of the comments are concerned with the low-dose extrapolation procedure and since they are closely related to each other, an appendix is presented which summarizes our new procedure to derive water quality criteria and the rationale for selecting the procedure and compares the new with the old procedure. Much of the criticism has been directed toward utilization of the one-hit linear model for estimation of the risk. After considerable input by a peer review of outside scientists, the multistage model developed by Kenneth Crump has been adopted in place of the one-hit model extrapolation. The Appendix describes the new multistage hit model. Further responses to the individual comments are being presented below.

A. The One-Hit Model

Issue 1

Comment summary: Several comments criticize the one-hit model as arbitrary, inappropriate, simplistic, unrealistic, inaccurate, not universally accepted, and/or overly conservative.

Response: The Agency has adopted a new procedure for deriving water quality criteria which is conceptually similar to, but operationally more systematic than the one-hit procedure used previously by the Agency. Although the criteria calculated by the new procedure are not appreciably different than those calculated by the old procedure as demonstrated in the appendix, most of the general criticisms do not apply to the new procedure.

Issue 2

Comment summary: Comments pointed out that the EPA has declined to use the one-hit model under the federal pesticide laws for heptachlor and chlordane.

Response: The commentor is correct that the one-hit model was not used in the chlordane-heptachlor suspension hearings in 1975. However, in the cancellation hearings, which were held after the formation of the Carcinogen Assessment Group and the adoption by the Agency of the Interim Cancer Assessment Guidelines and in the proposed water quality criteria, one-hit extrapolation model was used for risk estimation. In the current final water quality documents the "linearized" multistage model is used; the comparison between these two approaches in the appendix to those comments shows that the chlordane and heptachlor data have the largest upward curvature in the dose-response curve of all the carcinogens in the water quality list. For this reason the new approach reduces the risk for chlordane and heptachlor more than for the other compounds. This example shows how the new extrapolation procedure compensates for the "overly conservative" results of the one-hit approach in cases where the dose-response data is sharply concave upward at low doses.

Issue 3

Comment summary: The EPA's choice of this model because ". . . it gives greater risk estimates than other plausible models" (page 15978 of March 15, Federal Register) was criticized as being a policy/political/social statement rather than a scientific defense.

Response: See the appendix for reasons for selecting linear, non-threshold models.

Issue 4

Comment summary: The statement that this model was endorsed by IRLG (1979) was felt to have limited meaning because this document has not yet been reviewed and because the document is merely a reiteration of policy.

Response: The model was not selected on the endorsement of IRLG. See appendix.

Issue 5

Comment summary: In the methodology (page 15978, column 1, first full paragraph of the March 15, Federal Register), this model is scientifically defended as being consistent with three basic concepts in chemical carcinogenesis:

a. The Linearity of the Dose-response Curve for Mutagens—This is challenged on the following points:

The shape of the dose response curve in the low dose region cannot be determined.

Not all assay systems give linear dose-response patterns.

Some Ames tests are linear because the liver microsomes are added in a fixed amount and thus ". . . the laws of first order kinetics require a linear response to the variation in concentrations of the test substance as it is mediated by the activator."

b. Chemicals which are Mutagens are Likely to Induce Cancer—This is challenged on the basis that not all mutagens cause cancer.

c. Epidemiology Studies on Radiation, Cigarettes, and Aflatoxin show a Linear Dose-response Pattern—This is challenged on the following points:

Radiation carcinogenicity cannot be applied to chemical carcinogenicity because they act by different mechanisms.

Not all radiation dose-response data is linear.

Smoking data are compounded by difficulties with cocarcinogens and other exposures.

Aflatoxin data rely purely on estimated exposures.

Response: (a) The commentor points out that even in mutagenesis test systems there is a level of mutagenic response that is too small to be detected and that below this level the shape of the dose-response curve cannot be measured. While this is true, the Agency's point is that the mutagenesis data available are fundamentally consistent with a linear no-threshold mechanism of action. Another commentor has misinterpreted the mutagenesis dose-response data. As presented by the original authors, the data show some residual mutagenic activity at zero dose. This is interpreted erroneously as being a threshold below which no response occurs. Another commentor supports the Agency's contention that the mutagenesis dose-response relationship is linear by giving a possible explanation for the linearity.

(b) The fact that chemicals which are mutagenic are "likely" to induce cancers does not imply that "all" mutagens cause cancer. Furthermore, those mutagens which were not shown experimentally to be carcinogenic could not be accepted unequivocally as non-carcinogenic because of the uncertainty in the study outcome.

(c) Both chemicals and radiation cause DNA damage and subsequent interference with the normal functioning of DNA, although the mechanisms for causing this damage are different for radiation and chemicals.

Issue 6

Comment summary: Several comments stated that the possibility of thresholds for at least some chemical carcinogens is not unreasonable, should be addressed in greater detail and/or cannot be resolved at this time. The possibility of assuming a threshold was recommended for the following compounds: chloroform, PCBs, acrylonitrile, hexachlorocyclohexane, chlorinated benzenes, and chlorinated ethanes.

Response: Currently there is no satisfactory method for estimating the low-dose carcinogenic risk to "epigenetic" chemicals. Until the mechanisms for such action are understood on a case-by-case basis to the point of being able to justify a specific extrapolation procedure, the linear, no-threshold concept will be assumed to be valid. The "linearized" multistage approach now used result in lower risks than the older "one-hit" approach for compounds having a sharp upward curvature.

For the specific chemicals referred to in Issue 6, no evidence was presented in support of a carcinogenic threshold dose except for chloroform. Commentors state that chloroform induces an increased rate of cell proliferation, which they implicitly equate with carcinogenesis, at high doses because of a cytotoxic response which is unrelated to direct DNA interaction and which therefore is not expected to occur at low doses. Three pieces of evidence are cited in support of that position: (a) chloroform is not mutagenic in the Ames tests: (b) at doses below 15 mg/kg/day, mice show no excess rate of DNA synthesis in kidney and liver tissue. This excess is expected for a cytotoxic response leading to cell proliferation; (c) Roe et al (1979) on the basis of responses in four strains of mice, has established a no-carcinogenic effect level of 17 mg/kg/day, whereas the positive NCI experiment used by EPA for the water criterion was carried out at 200–400 mg/kg/day.

Before the existence of a threshold for chloroform can be established several issues need to be resolved: (a) are the no-effect levels in the DNA synthesis studies and in Roe's observations real phenomona or only artifacts occurring simply because the limit of detection in these studies was being reached? (b) The relation between the cellular proliferation, which is alleged to be manifested by increased DNA synthesis, and carcinogenesis is unclear, since in the mouse strains used by NCI kidney tumors do not occur and liver tumors do, whereas in the experiments cited by a commentor both liver and kidney exhibit DNA synthesis.

Issue 7

Comment summary: A distinction should be made between genetoxic and epigenetic carcinogens based on mutagenicity data. These comments imply that a threshold model would be more appropriate for epigenetic carcinogens.

Response. While it is true that most carcinogens do interact with DNA, there are some compounds, such as phorbol esters in mouse skin studies and phenobarbital in rat liver, which are incomplete carcinogens by themselves, but require another substance to initiate or promote their action. In these studies the effects are unrelated to DNA interactions and apparently involve important recovery processes. This newly-developing field is not yet well enough understood to justify the use of a particular dose-response extrapolation model.

Issue 8

Comment summary: Another group of comments vigorously opposed the non-threshold assumption used in the one-hit model. Criticism of the non-threshold assumption were most extensively articulated by commentors which contended that the non-threshold assumption is:

Contrary to experience and logic, to what is known of biological systems, and to existing scientific data and is a product of the desire to obtain a simple and easy-to-use method for criteria derivation.

A related comment contended that thresholds are apparent for mutagens and therefore—given the presumed relationship of carcinogenicity to mutagenicity—thresholds should be postulated for carcinogens.

Response: Commentors state that the linear non-threshold model is: (a) contrary to experience and logic; (b) contrary to what is known about biological systems; (c) contrary to existing scientific data and (d) an approach based on faith that could not be disproved by any facts.

(a) The linear non-threshold model does not imply, as suggested by a commentor, either that (a) cancer is inevitable in the general public or in heavily exposed industrial workers or that (b) all substances are carcinogenic. It simply states that the probability of a person getting cancer is proportional to the amount of carcinogen to which he is exposed.

(b) First order reaction processes are common in biological systems especially in mutagenesis.

(c) Dr. Bingham's article did not advocate a sigmoid dose-response curve in preference to a linear curve, as stated by the commentor. She stated that several environmental factors can alter the dose-response relationship, and would thereby change the curve whichever way it was described. In fact, her main point was that "until we understand more about the primary carcinogenic insult and its progression, predicting or estimating thresholds is risky." The Agency agrees with this conclusion.

(d) The Agency agrees that it would be extremely difficult to use negative epidemiology data as proof that a carcinogenic threshold exists for a compound having positive animal results.

Issue 9

Comment summary: Several comments critized the one-hit model because it does not fit some experimental data as well as other models. This was illustrated for heptachlor, chlordane, and aflatoxin and chlorinated ethanes.

Response: The new extrapolation method overcomes the difficulty in fitting the model to the data because the multistage model has enough flexibility to fit any montonically increasing dose-response relationship. See also the response to Issue 16.

Issue 10

Comment summary: The application of the model was also criticized because it disregards data at all but one dose level and fails to consider the results of other experiments.

Response: The new procedure does not have these shortcomings. See appendix.

Issue 11

Comment summary: The highest potency factor to the exclusion of all other data should not be used in generating criteria because this process does not involve maximum-likely risk estimates.

Response: In judging which of several animal studies to use as the basis for the quantitative risk estimate, the quality of each study is considered as well as the numerical slope factor. As explained in the preamble, an experiment with a small number of animals is rejected in favor of a larger experiment if the two have a similar dose-response relationship. A similar rejection is also made if an experiment is judged to be unreliable for other reasons. Because of the strain, species, and sex differences, it is considered improper to calculate an average response across all animal species and designate this average as the carcinogenic potency for animals in general.

Issue 12

Comment summary: ". . . no experiment, however large and well run, could ever reduce these estimates (criteria)."

Response: In judging which of several animal studies to use as the basis for the quantitative risk estimate, the quality of each study is considered as well as the numerical slope factor. As explained in the preamble, an experiment with a small number of animals is rejected in favor of a larger experiment if the two have a similar dose-response relationship. A similar rejection is also made if an experiment is judged to be unreliable for other reasons. Because of the strain, species, and sex differences it is considered improper to calculate an average response across all animal species and designate this average as the carcinogenicity potency for animals in general.

Issue 13

Comment summary: The EPA method is insensitive to reproducibility of the results, results at lower doses, and the number of animals per dose group.

Response: In judging which of several animal studies to use as the basis for the quantitative risk estimate, the quality of each study is considered as well as the numerical slope factor. As explained in the preamble, an experiment with a small number of animals is rejected in favor of a larger experiment if the two have a similar dose-response relationship. A similar rejection is also made if an experiment is judged to be unreliable for other reasons. Because of the strain, species, and sex differences, it is considered improper to calculate an average response across all animal species and designate this average as the carcinogenic potency for animals in general.

Issue 14

Comment summary: Several examples are given of the failure of the one-hit model to predict cancer rates in humans based on epidemiologic studies:

Analyses of data on: chloroform, carbon tetrachloride, tetracholoroethylene, aflatoxin, chlordane, arsenic, and beryllium.

In a summary of analyses of DDT, dieldrin, and aflatoxin, it is indicated that the one-hit model predicts an incidence of 153,000 liver cancers per year but that the observed response rate from all chemicals in only 3,000 to 4,000 per year. A similar analysis is made of pollution exposure-cancer rates in the Sacramento River area.

Response: For chloroform, carbon, tetrachloride, and tetrachloroethylene the analysis assumed that all of the workers were exposed at the TLV levels for their entire lifetime. In reality most workers are not exposed continuously to levels as high as the TLV and most work for only a few years at these jobs. This procedure overestimates the average lifetime exposure by at least a factor of 10 and the risk estimates for the workers are too high because of exposure assumptions used by the commentor rather than solely because of an overestimated slope factor.

For aflatoxin the commentor showed that the multistage model fits the observed human data more closely than the one-hit model. Therefore, that analysis partially justifies the revised procedure, although this compound is not on the water quality list.

The criterion for arsenic was based on human data, which was linear with dose. However, none of the negative epidemiology studies in areas with high drinking water levels of arsenic was inconsistent with the model developed on the basis of the Taiwan skin cancer data.

Commentors estimated that the annual number of cancer cases caused by beryllium intake is about 14,000. They gave no reason why this number is considered excessive considering that 400,000 cases per year are observed from all causes.

Issue 15

Comment summary: Based on the above types of analyses, several comments recommended that epidemiologic data be used to test and/or modify risk estimates.

Response: The Agency agrees that good epidemiological data should be used to estimate or modify risk estimates. The Agency always preferred using epidemiological data to the animal data in deriving water quality criteria.

Issue 16

Comment summary: Some comments suggest that selection of a particular model should be left open and subject to the nature of the experimental data and epidemiologic or metabolic information.

Response: The Agency does not agree that the selection of a particular model should be left open and subject to the nature of the experimental data for the following reasons. When behavior of the dose-response curve at low doses is not sufficiently understood, it is more appropriate to predetermine the low-

dose extrapolation model. Considering the fact that all the mathematically analytic functions such as most of the parametric dose-response curves could be approximated by polynomials which are dominated by the higher order terms in the high-dose range, whereas they are vanishingly small in the low-dose regions it is not surprising to see that different dose-response models could fit well a set of high dose data while their low-dose extrapolations differ drastically. Therefore, the selection of the extrapolation model should be based on knowledge of carcinogenic mechanisms (even though limited and debatable) rather than being determined solely by the high dose behavior of the dose-response curve.

Issue 17

Comment summary: Other comments suggested that the one-hit model should be used only in the absence of data suggesting that other models give a better fit.

Response: See response to Issue 16 and the appendix.

Issue 18

Comment summary: Two comments recommend that several models used for analysis along with appropriate confidence intervals would more objectively reflect the state of scientific knowledge.

Response: The inclusion of several arbitrary models in order to get a range of risk estimates would add no additional scientific information while at the same time would create confusion and thereby undermine the utility of risk estimates. The model chosen by the Agency is regarded as giving a plausible upper limit to the risk.

Issue 19

Comment summary: A general discussion of alternative models is given in some of the comments. Specific models recommended include: Logistic; Probit; Multi-hit; Mantel and Bryan; Weibull; and Pharmacokinetic.

Response: The inclusion of several arbitary models in order to get a range of risk estimates would add no additional scientific information while at the same time would create confusion and thereby undermine the utility of risk estimates. The model chosen by the Agency is regarded as giving a plausible upper limit to the risk.

B. Use of Confidence Intervals

Issue 20

Comment summary: Confidence intervals or a range should be used in deriving criteria.

Response: The Agency feels that the statistical confidence intervals should not be used to express the range of uncertainty of the criteria because this range does not include major uncertainties which are not quantifiable, such as species differences in metabolism, diet, target organ specificity, and other biological variables.

C. Species Conversion Factor (W_H-W_A)⅓

Issue 21

Comment summary: Comments suggested that this factor may not be appropriate for carcinogens because: (a) DNA repair rates appear to be inversely proportional to body weight, and (b) mixed-function oxidase activity, which may activate carcinogens, is higher in rodents than in man. Examples were given indicating that man is less sensitive than experimental mammals to chloroform, aflatoxin, and vinyl chloride.

Response: Although some commentors discussed reasons why the species conversion factor, (70/W)⅓, may not be appropriate for particular compounds, no suggestion was made for an alternative method which would be valid in general. Commentors suggested that mixed-function oxidase activity is lower in humans than in rodents and that humans metabolize chloroform less completely than animals, but facts like these, even if quantified would have uncertain implications to carcinogenic potency in general because increased metabolic activity could both enhance carcinogenic potency by "inactivating" the agent.

The fraction of a compound (e.g. chloroform) unmetabolized may have no relation at all to the amount of active metablite formed. In the general method, the cube root factor is intended to account only for the body size difference between animal species as it relates to the availability of the chemical to the body tissues. Any specific knowledge available on metabolism differences would have to be incorporated as an additional factor if it could be directly related to cancer incidence. In general, mixed-function oxidase activity has no clear relation to cancer occurrence, therefore, cannot be included in the general approach.

The best apporach for checking the validity of the species conversion factor is to correlate carcinogenic potency of agents in animals with that in humans where suitable information is available. This was done in a preliminary fashion by Messelson (quoted by one commentor) and is currently being investigated by the Agency.

Issue 22

Comment summary: Data on comparative metabolism should be used, whenever possible, to modify the risk estimate.

Response: See Issue 21 for response to chloroform metabolism issue. The Agency acknowledges that species differences in metabolism should be considered in all cases where the data can be interpreted as being relevant to carcinogenicity. In the methodology description the appropriate place to incorporate this information is in the factor r, called the absorption fraction.

D. Time-To-Tumor Data

Issue 23

Comment summary: Some comments stated that the EPA's modification of the one-hit model does not consider the time-to-tumor concept.

Response: The time-to-tumor concept was incorporated in the one-hit procedure by using the model $P=1-\exp(-bd\,t^3)$ where t is the average fraction of a lifetime the tumor was observed and is also incorporated into the current approach. If sufficiently well defined time-to-tumor data are available, a more refined model would be used.

Issue 24

Comment summary: Other comments contended that, because of the relationship between dose and latency, even potential carcinogens will not induce tumors in a normal lifespan. Examples were given for beryllium and arsenic.

Response: The arguments given in this comment do not invalidate the criteria which are associated with a lifetime risk of 10^{-5}. The arguments given in the comment proceed as follows:

Let F(d,t) be the probability of cancer by age t at exposure d. F is a monotonic increasing function of both variables t and d. Let d_o be the exposure associated with the lifetime risk of cancer 10^{-6} obtained by solving for d from the equation $F(d,t) = 10^{-6}$ and $t = 70$ which is taken as the average lifespan. Based on the arsenic risk assessment by the CAG the comment argues that at exposure $d_o = 0.002\ \mu g/liter$ (where d_o is associated with a lifetime risk of 10^{-6}), the median age would be 2,636 years before cancer can occur, where 2,636 is obtained by solving for t from the equation $F(d_o,t) = 0.5$.

Therefore, if the water concentration is $0.002\ \mu g/l$ the risk at 70 years is 10^{-6} and at 2,636 years it would be 0.5. These

are not inconsistent statements, as implied by the commentor.

Issue 25

Comment summary: One comment suggested that studies in which t is less than 0.75 may not be useful because of insufficient time for tumor development.

Response: The t^3 factor is necessary when the carcinogenic response is so strong that the animals die prematurely of tumors. This is true regardless of whether the median time of death from tumors is greater or less than three-fourths of their natural lifespan.

Issue 26

Comment summary: Another comment raised questions about the experimental difficulties of Druckery's work in precisely determining time-to-tumor development and the need to correct time-to-tumor data for the degree of malignacy of the tumor.

Response: The time-to-tumor data is used only when there was an early terminal sacrifice. In this case the full spectrum of tumor development is observable histologically and the difficulty of observing the precise time of tumor development is not encountered.

E. Mutagenicity Data

Issue 27

Comment summary: Mutagenicity data should be given greater weight to determine potential carcinogenicity especially when mammalian bioassays or epidemiology data are lacking.

Response: See response to Issue 28.

Issue 28

Comment summary: The commentor describes a method for using results from short-term tests, such as the Ames test or the hamster embryo *in vitro* transformation test, to perform quantitative carcinogenicity risk assessment.

Response: The Agency does not regard results from short term mutagenicity tests, even those from a test battery using several organisms, equivalent to chronic whole animal bioassays for carcinogenicity because of the inherent differences between the test systems utilized (i.e., bacteria and cell cultures versus whole animals, in which all the metabolic, distribution and excretion systems of the body are intact). Until correlations between the carcinogenicity and mutagenicity of agents become better understood and more widely accepted, and until the data base is more extensive, the Agency is not justified in making quantitative assessments of carcinogenicity based solely on mutagenicity test results and structure activity relationships. In decisions regarding the carcinogenicity of agents, the Agency currently uses short term bioassay tests only to support equivocal findings of long term animal bioassays and human studies.

F. Epidemiology Data

Issue 29

Comment summary: Epidemiology data on societies other than the U.S.A. should not be used because of "dissimilar and possibly controlling variables."

Response: The CAG feels that epidemiological data on societies other than the U.S.A. population can be used as long as care is taken in interpreting and using the data.

Issue 30

Comment summary: Citing criteria for arsenic and cadmium, the comment states that: "Valid epidemiological studies exploring a cause-and-effect relationship between exposure to a substance and disease must avoid a number of flaws: bias, confounding factors, and the confusion of chance associations with casual relationships. The epidemiological studies used by the Agency in criterion formulation fail to avoid these flaws."

Response: While nearly every epidemiologic study contains flaws in the scientific sense, a regulatory agency must interpret all data available, making judgments as to whether the studies were too flawed for proper conclusions. In determining the carcinogenicity of a substance, the Agency is sensitive to the need to find human populations who have been exposed to other agents also. The appearance of rare types of cancers and/or a dose-response trend, however, often provide(s) very positive evidence of carcinogenicity. Such is the case with the Taiwan drinking water survey. Here, where artesian well water with a high concentration of arsenic has been used for more than 60 years, a high correlation between amount of arsenic and skin cancer was found. In addition, the pre-cancerous skin conditions were pathonomic of arsenic exposure, so that there was little chance that the cancers were caused by another agent. Furthermore, the skin cancer is of a rare form that was virtually unknown in parts of Taiwan where the drinking water arsenic content was small. In addition, a positive association between arsenic level in drinking water and the prevalence of skin cancer has been reported in at least three other areas in the world.

Cadmium is an unusual situation in that five independent populations showed an excess of prostate cancer. Even though each study is inconclusive by itself for the reasons cited, a chance occurrence of this finding is exceedingly unlikely.

While the effect of many possible confounding factors, especially concomitant exposure to unknown chemicals, cannot be accurately determined, the Agency has the responsibility of estimating criteria levels with the best information available.

G. Qualitative Determination of Carcinogenicity

Issue 31

Comment summary: The commentor states that: "A substance is currently considered to be carcinogenic if it produces a statistically significantly higher than normal incidence of tumors in treated animals in a single test. Such a result is inconclusive, because of the problems of false positives.

Response: In establishing a false negative rate of $P<0.05$ the commentors correctly point out that the false positive rate is rather high. However, the careful review of other information about the compound reduces the effective false positive rate.

Issue 32

Comment summary: The decision to label a compound "a suspect human carcinogen and therefore a potential human carcinogen" based on tumorigenicity in experimental mammals has not been validated.

Several comments from the initial publication of the methodology made a similar criticism.

Response: Among public health authorities it is widely accepted that the positive results in chronic animal bioassays indicate that the agent poses a potential risk for human carcinogenicity. This attitude is thoroughly summarized in the IRLG report (Jour. Natl. Cancer Inst. 63: 241, 1979). In addition, a review by Tomatis (Am. Rev. Pharmacol. Toxicol. 79: 511, 1979) emphasized the value of rodent bioassays in predicting human carcinogenic risk.

Since 1976, (41 FR 21402) the EPA has been following the same regulatory philosophy in evaluating carcinogenic hazards. Therefore, contrary to the comments, the EPA has not been acting unilaterally without adequate public notice.

Issue 33

Comment summary: The commentor quotes a WHO publication: "It would be unwise to classify a substance as a

carcinogen solely on the basis of a species or strain-specific increased incidence of tumors of a kind that occur spontaneously with high frequency."

Response: The CAG agrees partially with the comment. However, even if the spontaneous incidence is high, a statistically significant enhancement of the tumor incidence is of concern, and other evidence for the compound should be evaluated for consistency with that finding.

Issue 34

Comment summary: Citing PAH as an example, commentors state that the documents have been inconsistent in qualitative determinations of carcinogenicity.

Response: In cases such as PAH where one criterion has to be set for an entire class of compounds, the Agency does not state that each chemical in the class is a carcinogen, as implied by the commentor. Therefore, the PAH example cited by the commentor does not show that the Agency is inconsistent in classifying compounds as carcinogenic.

The intended interpretation of the criterion is that the risk is less than 10^{-5} whenever the total concentration of all PAH compounds in water is less than the criterion. In a hypothetical case where all of the PAH compounds in a sample are non-carcinogenic, the criterion would be too strict; however, this situation seldom occurs. In most cases where PAH is detected, a mixture of compounds occurs and in calculating the criterion the assumption is made that all components have the same carcinogenic potency as benzo-α-pyrene.

Issue 35

Comment summary: Bis(2-chloroisopropyl)ether (BCIE) yielded negative results in an NCI bioassay. Nonetheless, the cancer based criteria based on an upper limit of the true response rate was calculated because of the structural similarity of BCIE to other carcinogenic chloroalkyl ethers. The commentor states that this is inappropriate.

Response: As a response to the public comments, the Agency has changed its interpretation of data on bis(2-chloroisopropyl)ether (BCIE). It is no longer considered to be carcinogenic and, therefore, a criterion based on carcinogenic data is not calculated.

Issue 36

Comment summary: Using the criteria for chromium and asbestos as examples, the commentors state that data on inhalation carcinogenicity should not be used to derive criteria if oral carcinogenicity tests are negative.

Response: The criteria for chromium (Cr) was derived on a marginally significant digestive cancer incidence which occurred from inhalation exposure (Enterline epidemiology study). The digestive system cancer is assumed to be caused by chromium (Cr) which is removed from the respiratory system by mucociliary action and then swallowed. This is comparable to exposure to chromium in drinking water. Cr (VI) has not been adequately tested for its carcinogenic potential in animals; therefore, further studies to assess the carcinogenicity of Cr (VI) by the oral route would be desirable and necessary before it is concluded that oral tests are negative.

Asbestos has been shown to cause peritoneal mesothelioma in humans and is also associated with a significant increase in human gastrointestinal cancers. These are caused by inhaled asbestos. Since up to 99 percent of the inhaled asbestos is eventually swallowed, the Agency feels that asbestos-contaminated water could cause the same type of gastrointestinal cancers as inhaled asbestos.

H. Joint Action/Cocarcinogenicity

Issue 37

Comment summary: The commentors emphasized the potential importance of cocarcinogenicity and possible synergistic effects among carcinogens.

Response: The potential importance of cocarcinogenicity and possible synergistic effects among carcinogens has not been addressed by the CAG in deriving water quality criteria, since sufficient data is not available at this time to make decisive judgments related to these issues.

I. Site Specific vs. Total Tumors

Issue 38

Comment summary: No public comments specifically addressed this issue. However, the methodology committee should discuss the appropriateness of using data on total tumors for quantitative risk assessment.

Response: Since chemicals generally exert their carcinogenic effects at specific organ sites, the incidence of tumors at the responding sites is the most relevant information to consider in making either qualitative or quantitative evaluations of hazard. The instances where the tumor incidence at all sites combined is elevated, but no one site or group of sites is significantly increased, are regarded as weak evidence of carcinogenicity.

J. General Issues

Issue 39

Comment summary: Single unverified bioassays should not be used for establishing criteria for dichlorobenzene.

Response: The comment does not refer to carcinogenicity data since no carcinogenic information was available on dichlorobenzene.

Issue 40

Comment summary: Some comments expressed concern with the types of studies used to derive criteria. Another comment implies that only data published in referenced journals should be used. Two commentors recommend that explicit reasons be developed for accepting or rejecting studies.

Response: The evaluations of bioassay studies for carcinogenicity by the CAG is sufficiently detailed to be equivalent to that given in peer reviewed journals.

Issue 41

Comment summary: The EPA "has used animal studies without adequately considering the nature of the toxic agent and its mechanism of action, the conditions of exposure, or the physiological characteristics of the test organism."

Response: The Agency routinely considers all of the available toxicological data cited by the commentor and agrees that these factors are important.

Issue 42

Comment summary: Several comments questioned the appropriateness of using studies from one route of exposure—particularly inhalation—to establish criteria for ingestion.

Response: If a given chemical induced a carcinogenic effect by inhalation at a distant site, it is likely that the compound could also produce a carcinogenic effect by other routes of administration. Therefore, the Agency considers it appropriate to use inhalation data to derive criteria for ingestion, recognizing the difficulty of determining the dose.

Issue 43

Comment summary: Treating all of the proposed criteria as if they were based upon equally valid data is not scientifically sound. EPA must make explicit the nature, extent, and quality of the data utilized to estimate criteria.

Response: The Agency has indicated which criteria should be regarded as

marginal based on the nature of the available data.

Issue 44

Comment summary: Criteria based on carcinogenic effects might not be adquate to protect humans from mutagenic, teratogenic, or other toxic effects.

Response: The U.S. EPA Office of Health and Environmental Assessment is currently developing guidelines for estimating the human risk to substances producing mutagenic, teratogenic, and reproductive effects.

Appendix

I. An Improved Procedure for Deriving Water Quality Criteria

As discussed in the methodology document (1981)* the Carcinogen Assessment Group (CAG) has adopted a new prodedure which is more systematic than the one-hit procedure used previously by the CAG for calculating the water quality criteria. The model selected for the low dose extrapolation is given by

$$P(d)=1-\exp[-(q_0+q_1d+\ldots+q_kd^k)]$$

At low doses, the upper confidence limit for the extra risk

$$A(d) = \frac{P(d) - P(o)}{1 - P(o)}$$

has the form

$$A_U(d) = 1-\exp(-q_1^*d) \simeq q_1^* d.$$

That is, the risk $A_u(d)$ is always linerarly related to d at low doses. The constant q_1^* corresponding to the 95 percent upper confidence limit for A(d) is taken as the carcinogenic potency for calculating the water quality criteria.

Instead of extrapolating with the one-hit model based on the lowest dose group showing statistically significant response as previously used by the CAG, the new procedure is employed because of the following reasons: (1) the procedure is more systematic; (2) it invokes fewer arbitrary assumptions; (3) the assumption of the low-dose linearity is not essential in the use of the model, and; (4) it incorporates data from all of the dose groups which are consistent with the multistage model. At the same time, it is conceptually consistent with the linear non-threshold concept on which the one-hit procedure was based.

The Agency recognizes that there is no really solid scientific basis for any mathematical extrapolation model which relates carcinogen exposure to cancer risks at the extremely low level of concentration that must be dealt with in evaluating the environmental hazards. For practical reasons such low levels of risk cannot be measured directly either by animal experiments or by epidemiologic studies. We must, therefore, depend on our current understanding of the mechanisms of carcinogenesis for guidance as to which risk model to use. At the present time the dominat view of the carcinogenic process involves the concept that most agents that cause cancer also cause irreversible damage to DNA. This position is reflected by the fact that a very large proportion of agents that cause cancer are also mutagenic.

There is reason to expect the quantal type of biological response that is characteristic of mutagenesis is associated with a linear non-threshold dose-response relationship. Indeed, there is substantial evidence from mutagenesis studies with both ionizing radiation and a wide variety of chemicals that this type of dose-response model is the appropriate one to use. This is particularly true at the lower end of the dose-response curve; at higher doses, there can be an upward curvature probably reflecting non-threshold dose-response relationships. The linear non-threshold model is also consistent with the relatively few epidemiological studies of cancer responses to specific agents that contain enough information to make the evaluation possible (e.g., radiation induced leukemia, breast and thyroid cancer, and skin cancer induced by arsenic in drinking water, and liver cancer, induced by aflatoxin in the diet). There is also some evidence from animal experiments that is consistent with the linear non-threshold model (e.g., liver tumors induced in mice by 2-acetylaminofluorene in the large scale ED_{01} study at the National Center of Toxicological Research and the initiation stage of the two-stage carcinogenesis model in the rat liver and the mouse skin).

Because it has the best, albeit limited, scientific basis of any of the current mathematical extrapolation models, the linear non-threshold model has been adopted as the primary basis for risk extrapolation to low levels of the dose-relationship. The risk estimates made with this model should be regarded as conservative, representing the most plausible upper limit for risk, i.e., the true risk is not likely to be higher than the estimate but it could be smaller.

II. Comparison of the new Procedure with the Old (One-Hit) Procedure

The Agency had previously calculated the slope b based on the one-hit model $P=1-\exp-bd$, using only the data from the lowest dose group where the incidence rate is statistically significantly different from the control group (see Federal Register, Part V, Thursday, March 15, 1979). The point estimate b was taken as the carcinogenic potency for the compound. Unlike the new procedure, the upper confidence limit was not used because the CAG recognized that the one-hit model is usually conservative at low doses and thus the point estimate b of the slope was considered as an upper limit of the true carcinogenic potency. This ad hoc approach was used because it is simple and easy to understand.

Since b was considered an upper limit in an ad hoc sense, it would be interesting to compare the new procedure with the one-hit procedure by calculating the ratio of two carcinogenic potencies b/q_1^* for 21 chemical compounds in the Proposed Water Quality Criteria Documents which have data from at least three dose groups. Except for chlordane and heptachlor the new procedure agrees with the one-hit procedure within a factor of 2. When the one-hit procedure is modified (Table 1) the two procedures become comparable. Therefore, the old procedure could be used as a simple and quick way of estimating the carcinogenic potency.

Table 1.—*Ratio of Carcinogenic Potencies*

Chemicals	b/q_1^*	
Chlordane	3.33	[1] (0.83)
Heptachlor	2.50	[1] (0.78)
Carbon tetrachloride	1.47	
PAH	1.35	
HCB	1.19	
1,2 Dichloroethane	1.18	
Acrylonitrile	1.10	
Hexachloroethane	1.06	
2,4 6-Trichlorophenol	.98	
Trichloroethylene	.95	
Hexachlorobutadiene	.86	
Chloroform	.81	
1,1,2,2-Tetrachloroethane	.75	
1,1,2-Trichloroethane	.70	
TCDD	.65	
2,4-Dinitrotoluene	.63	
Vinyl chloride	.63	
Toxaphene	.56	
Aldrin	.56	
Bis(chloromethyl)ether	.53	
Hydrazobenzene	.50	

[1] The parenthesized value is the ratio b/q_1^* when b is calculated based on the 95 percent upper confidence limit (one-sided) for the incidence rate in the next lowest dose group, instead of using the incidence rate of the lowest dose group showing statistically significantly different from the control group. This modification was recommended when the tumorigenic responses exhibit sharp upward curvature with low doses.

[FR Doc. 80-36186 Filed 11-26-80; 8:45 am]

BILLING CODE 6560-29-M

* Carcinogen Assessment Group's Procedure for Calculating Water Quality Criteria, Updated 1981.

federal register

Friday
November 28, 1980

Part VI

Environmental Protection Agency

Investigation of Averaging for Heavy-Duty Engine and Light-Duty Truck NO_x Emissions; Proposed Rulemaking; Advance Notice

ENVIRONMENTAL PROTECTION AGENCY

40 CFR Part 86

[AMS-FRL 1648-7]

Investigation of Averaging for Heavy-Duty Engine and Light-Duty Truck NO_x Emissions

AGENCY: Environmental Protection Agency.

ACTION: Advance Notice of Proposed Rulemaking.

SUMMARY: EPA is developing a rulemaking proposal which would permit some form of emissions averaging for NO_x emissions from heavy-duty engines and light-duty trucks. The effect of permitting averaging would be to increase the flexibility afforded manufacturers in attaining emission reductions, and thereby reduce the burden of compliance, without reducing air quality benefits. EPA anticipates that averaging would be applicable to the 1985 and later model years, in conjuction with the statutory NO_x emission standards required under Section 202(a)(3) of the Clean Air Act as amended in 1977. Development of those standards is now being pursued in a separate rulemaking.

DATES:

A workshop is scheduled for January 1981, at a date, time and place to be announced in a subsequent notice. The closing date for submission of comments will also be announced at that time.

EPA anticipates publication of a Notice of Proposed Rulemaking in the spring of 1981, with final rulemaking by the end of 1981.

ADDRESSES:

Written comments, other than those submitted directly to EPA at the workshop, should be submitted (in duplicate if possible) to Public Docket No. A-80-49 at:

Central Docket Section (A-130)
Environmental Protection Agency
Attn: Docket No. A-80-49
401 M Street, S.W.
Washington, D.C. 20460

Materials relevant to this rulemaking will be placed in the docket by EPA. The docket is located at the above address in the West Tower Lobby, Gallery I. The docket may be inspected between 8 a.m. and 4 p.m. on weekdays. A reasonable fee may be charged for copying.

FOR FURTHER INFORMATION CONTACT: Glenn Passavant, U.S. Environmental Protection Agency, Emission Control Technology Division, 2565 Plymouth Road, Ann Arbor, MI 48105, Telephone: (313) 668-4408.

SUPPLEMENTARY INFORMATION

Background

The concept of averaging is not new to EPA, or to motor vehicle manufacturers. Averaging is used for determining Corporate Average Fuel Economy (CAFE) values in relation to the statutory fuel economy requirements. In addition, EPA has applied a related concept, known as the "bubble policy," to stationary sources. The reason for adopting such approaches as these is to obtain needed environmental benefits (i.e., reductions in emissions) with the minimum burden on the regulated industry. Averaging would reduce the burden on manufacturers by allowing them to maximize emission reductions where they are most easily obtained in trade for increased emissions in cases where control is more difficult or expensive.

When the recent light-duty diesel particulate regulations were promulgated, EPA indicated that it would investigate the use of averaging as part of the 1985 NO_x emission regulations for heavy-duty engines or vehicles. A task force was formed and began development of potential approaches to averaging. It very quickly became evident that adoption of averaging could have substantial impact on a wide range of EPA programs, and that these impacts needed to be considered carefully if a successful program was to result. In addition, EPA felt the need for considerable industry involvement early in the development process. At this point, the Agency was faced with a dilemma. The 1985 NO_x emission regulations for heavy-duty engines or vehicles and light-duty trucks (which are being handled as a single rulemaking) are restricted to a very tight timetable through deadlines established in the 1977 Clean Air Act Amendments. Since averaging is clearly not required by the Act, it would not be appropriate to substantially delay the NO_x rulemaking for the purpose of including an averaging concept. Therefore, EPA has decided to treat averaging as a separate rulemaking action. However, every reasonable effort will be made to finalize the reulsts of the averaging rulemaking and the NO_x rulemaking on the same time line.

Purpose

The purpose of this rulemaking action will be to pursue the development of an emissions averaging concept to be applied to NO_x emissions from light-duty trucks and heavy-duty engines or vehicles, for model year 1985 and beyond. Although a specific proposal has yet to be formulated, some anticipated provisions have been identified. Averaging would be restricted to within the same vehicle class (i.e., light-duty truck or heavy-duty engine). Averaging would apply on a manufacturer-specific basis. The program would result in emission limits for individual engine families and possibly a maximum limit above which no engine family could certify. Various averaging scenarios could result in emission limits for engine families being fixed at various times throughout the model year. The averaging methodology would be formulated in order to maintain—on a vehicle class and manufacture-specific basis—the overall emission reductions of the present non-averaging approach, i.e., the standards prescribed in the Act.

The benefits to be obtained from adopting an averaging program involve reduced costs to manufacturers resulting from increased flexibility in meeting emission standards. Instead of every family being certified to the same emission standard, the manufacturers would be able to use a variety of control strategies to achieve compliance under an averaging approach. For example, manufacturers could comply with the standard by achieving increased emission reductions in the families where reductions are most readily achievable. Clearly, the degree of difficulty and cost of achieving emissions reductions will vary from family to family.

It is possible that an averaging approach would also lead to improved fuel economy. This may be especially true in the case of NO_x due to the relationship between NO_x control and fuel economy for some control approaches. This potential savings is further enhanced by the fact that the quick fix technology sometimes used in short leadtime situations may also cause a fuel economy penalty (e.g., retarded timing). Additionally, the higher emitting engines which would require the greatest total reductions with a per vehicle standard would require less total reduction and would thus be able to minimize any fuel economy penalty which might otherwise occur with these engines.

The use of an averaging approach would minimize the chance that any family would have to be dropped from production due to "last minute" technological difficulty in demonstrating compliance with the emission standards. The higher emissions from these families could be offset by lower emissions from other families. This would have the added advantage of allowing longer use

of non-recurring investments such as R&D and tooling for some families.

In relation to marketing, an averaging approach would allow the "market testing" of a limited number of new engines or engine lines without the relatively large fixed cost of R&D associated with demonstrating compliance with a single stringent emission standard. However, as the sales of such an engine line grew, the manufacturer would need to offset the imbalance if this engine line had an emission limit above the applicable standard for the entire class. This offset could be achieved by lowering emissions or managing sales or emission levels from this or another engine line.

An averaging approach allows manufacturers to choose where their emission-related R&D funds will be spent, and may allow the emission-related expenditures to be spread more evenly over several years rather than lumped into the few years preceding the implementation of a revised standard.

One other potential savings is related to the flexibility a manufacturer has in establishing the emission limits for each family. For example, a manufacturer may choose to establish the emission limit for a family such that when produced it conforms to the emission standards of one or more of its export markers. This would decrease both development and production costs.

Issues

There are a number of issues to be resolved in developing a successful averaging program.

A. *Can an averaging concept be designed consistent with the Clean Air Act?* The Clean Air Act prescribes specific reductions in NO_x emissions for heavy-duty engines and light-duty trucks. Clearly, any averaging program must require adherence to the statute. At a minimum, this means that while an averaging program might allow manufacturers to set different emission limits for different engine families, a manufacturer's sales-weighted average emission level for the entire engine or vehicle class could not exceed the applicable standard for the class. In addition, the Act requires that applicable emission limits be met by all engines or vehicles to which they apply. One way of addressing this requirement might be to require that a manufacturer who wishes to use an averaging scheme establish a fixed mission limit for each of the engine families involved (as opposed to allowing averaging within such families). In any event, comments are particularly solicited on these and other legal issues that may be raised by particular averaging schemes.

B. *Can an averaging concept be successfully integrated with other EPA mobile source programs?* For example, EPA's present certification program is oriented toward compliance/non-compliance decisions which can be made on an isolated engine family basis. In an averaging program where a manufacturer was responsible only for average emission rates encompassing numerous families, the effect of an individual family's emission rates could not be determined without considering all other families from the same manufacturer and might in fact even fluctuate (with actual sales) over time. Such an environment of "moving targets" would make it very difficult to operate a meaningful certification program and at the same time avoid burdensome and complicated paperwork. In addition, certification could conceivably be a single go/no-go decision for the manufacturer's entire product line, with the threat being that no vehicles could be produced if the projected average exceeded the standard. Such jeopardy would be undesirable from the manufacturer's viewpoint.

EPA's present recall programs as well as state inspection and maintenance programs also rely on identifiable fixed emission limits. In-use data sufficient to identify a manufacturer's true corporate average emissions would have to be quite extensive, and it likely will be impractical to do this, which indicates the need for fixed limits. For state-operated I/M programs to operate without fixed limits for each vehicle tested clearly would also be unworkable. In the narrowest sense, since this rulemaking deals only with NO_x, it would not likely impact on many (or any) I/M programs. However, because what is decided here may affect future programs for HC and CO emissions, it is necessary to consider the question at this time.

Impacts such as these examples just mentioned are possible throughout EPA's mobile source program. Resolution of these difficulties will constitute an important aspect of this rulemaking.

C. *Can an averaging concept be designed to maintain equity between manufacturers?* EPA believes that as much as possible, its regulation should be designed so as to impact manufacturers equally and not create advantages or disadvantages for certain manufacturers. However, depending on how averaging is applied, it could be of much greater benefit to manufacturers with broad product lines than to manufacturers engaged in more limited or specialized production. A clear illustration of this would occur if averaging of gasoline-fueled engine emissions and diesel engine emissions were allowed. Those manufacturers who produce only diesel engines would not be in a position to benefit from such an option, while those who also produced gasoline-fueled engines would. Since it is considerably more difficult to obtain low NO_x emissions from diesel than from gasoline-fueled engines, the diesel-only manufacturer would be at a substantial disadvantage. A similar situation would arise if averaging between light-duty trucks and heavy-duty engines were allowed. Both of these problems can be eliminated if averaging is restricted by engine type and vehicle type. Of course, this would also decrease the potential benefits of the averaging approach for some manufacturers.

Other areas of possible equity concerns are manufacturing diversity in engine size mix, drive trains (i.e., 2-wheel drive or 4-wheel drive), or vehicle sizes (for light-duty trucks). The more specialized manufacturers in these areas would have inherently less ability to take advantage of averaging than those manufacturers offering a wide variety of products. This could put the specialized manufacturers at a competitive disadvantage, and eventually disrupt the market. Due to the current market structure it is evident that a few large, diverse manufacturers would benefit the most from averaging, at the expense of smaller manufacturers. If this aspect of averaging is not overcome, it could be a significant disadvantage.

D. *Can averaging be implemented without adverse environmental impact?* The averaging program must be designed to avoid adverse impacts on air quality both nationwide and locally.

In terms of broad overall impact, the question is one of a shift in the average emission rates attributable to adoption of averaging. Present regulations would require vehicles or engines being produced for 1985 to meet emission standards with a 90 percent pass rate. To assure that 90 percent of the vehicles or engines meet the standards would require a manufacturer to maintain his average emission level (after incorporating the effect of the appropriate deterioration factor) somewhere below the standard. This feature could be retained for averaging, by applying a 90 percent pass rate to each engine family. The adoption of some other forms of averaging, such as pure averaging, would allow the manufacturer's average emission level (again after incorporating the

appropriate deterioration factor) to rise up to equal the standard. Such a change would, of course, have less relative environmental benefits, and is therefore undesirable.

A second area of concern is more localized and related to the mechanics of balancing high emissions from some engine families against low emissions from others. If for one reason or another a certain geographical area had a high proportion of an engine type which was a high emitter (which could not occur under a non-averaging approach) then it could suffer from degraded air quality. One possible case involves transit buses in urban areas. If diesel bus engines emitted above the standard applicable for the class, the potential for air quality degradation would exist. The concentration of high speed/low horsepower diesel engines in Class VI trucks (19,500–26,000 lb. GVW) is another example. These engines exhibit a tendency toward higher emissions, while at the same time Class VI trucks accumulate a larger than average share of their mileage in urban areas. One final example concerns the use of specialized vehicles in certain geographic areas. Cities such as Buffalo, Pittsburgh and Cleveland, which receive heavy winter snows and can also have quite hilly terrain, may have a larger than average concentration of four-wheel drive light trucks. The concentration of these vehicles in such urban areas, along with higher emissions from four-wheel versus two-wheel drive trucks, may lead to localized air quality problems.

Workshop and Comments

A workshop is scheduled for January 1981, at a date, time and place to be announced in a subsequent notice. At that workshop EPA will receive comments on the issues discussed in this notice and expanded upon in a background criteria paper which EPA is preparing for public dissemination concurrent with the public workshop notice. Opportunity will also be provided for the manufacturers and other interested parties to present specific averaging programs which they believe satisfy the issues and criteria explained in the background paper. The record will be open for submission of comments for 30 days following the workshop.

Comments are invited on the issues outlined above, as well as any other items commenters feel are appropriate. Comments on desirable or undesirable components of an averaging program from the commenter's viewpoint and the reasons for them would be particularly appreciated. Relevant comments received before the end of the comment period will be considered in development of the proposed regulation. Comments should be submitted in writing to the public docket at the address given above (see "ADDRESSES").

Dated: November 18, 1980.

Douglas M. Costle,

Administrator.

[FR Doc. 80-37024 Filed 11-26-80; 8:45 am]

BILLING CODE 6560-26-M

federal register

Friday
November 28, 1980

Part VII

Department of Health and Human Services

National Institutes of Health

Recombinant DNA Advisory Committee Meeting; Proposed Actions Under Recombinant DNA Research Guidelines

DEPARTMENT OF HEALTH AND HUMAN SERVICES

National Institutes of Health

Recombinant DNA Advisory Committee; Meeting

Pursuant to Public Law 92-463, notice is hereby given of a meeting of the Recombinant DNA Advisory Committee at the National Institutes of Health, Conference Room 10, Building 31C, 9000 Rockville Pike, Bethesda, Maryland 20205, on January 8, 1981, from 9:00 a.m. to recess at approximately 6:00 p.m., and, if necessary, on January 9, 1981, from 8:30 a.m. to 5:00 p.m. This meeting will be open to the public on January 8 from 9:00 a.m. to approximately 3:00 p.m., and on January 9 from 8:30 a.m. to adjournment to discuss:

Amendment of Guidelines
Procedures for review of minor modifications of large-scale recombinant DNA experiments
Exemptions for organisms that exchange genetic information
E. coli K-12 host-vector systems
Host-vector systems other than *E. coli* K-12
NIH risk-assessment plan
Review of protocols for required containment levels
Review of meeting of Institutional Biosafety Committee chairmen
Review of proposed evaluation of Institutional Biosafety Committees
Other matters requiring necessary action by the Committee

Attendance by the public will be limited to space available.

In accordance with provisions set forth in Section 552b(c)(4), Title 5, U.S. Code and Section 10(d) of P.L. 92-463, the meeting will be closed to the public for approximately three hours for the review, discussion and evaluation of proposal(s) from a commercial concern(s) for scale-up of recombinant DNA experiments. It is anticipated that this will occur on January 8, from approximately 3:00 p.m. until adjournment. The proposal(s) and the discussion could reveal confidential trade secrets or commercial property such as patentable material.

Dr. William J. Gartland, Jr., Executive Secretary, Recombinant DNA Advisory Committee, National Institutes of Health, Building 31, Room 4A52, telephone 301-496-6051, will provide materials to be discussed at the meeting, rosters of committee members and substantive program information. A summary of the meeting will be available at a later date.

Note.—OMB's "Mandatory Information Requirements for Federal Assistance Program Announcements" (45 FR 39592) requires a statement concerning the official government programs contained in the *Catalog of Federal Domestic Assistance*. Normally NIH lists in its announcements the number and title of affected individual programs for the guidance of the public. Because the guidance in this notice covers not only virtually every NIH program but also essentially every federal research program in which DNA recombinant molecule techniques could be used, it has been determined to be not cost effective or in the public interest to attempt to list these programs. Such a list would likely require several additional pages. In addition, NIH could not be certain that every federal program would be included as many federal agencies, as well as private organizations, both national and international, have elected to follow the NIH Guidelines. In lieu of the individual program listing, NIH invites readers to direct questions to the information address above about whether individual programs listed in the *Catalog of Federal Domestic Assistance* are affected.

NIH programs are not covered by OMB Circular A-95 because they fit the description of "programs not considered appropriate" in Section 8(b)(4) and (5) of that Circular.

Dated: November 20, 1980.

Suzanne L. Fremeau,

Committee Management Officer, National Institutes of Health.

[FR Doc. 80-37013 Filed 11-26-80; 8:45 am]
BILLING CODE 4110-03-M

Recombinant DNA Research; Proposed Actions Under Guidelines

AGENCY: National Institutes of Health, PHS, DHHS.

ACTION: Notice of Actions under NIH Guidelines for Research Involving Recombinant DNA Molecules.

SUMMARY: This notice sets forth proposed actions to be taken under the NIH Guidelines for Research Involving Recombinant DNA Molecules. Interested parties are invited to submit comments concerning these proposals. After consideration of these proposals and comments by the NIH Recombinant DNA Advisory Committee (RAC) at its January 8-9, 1981 meeting, the Director of the National Institutes of Health will issue decisions on these proposals in accord with the Guidelines.

DATE: Comments must be received by December 29, 1980.

ADDRESS: Written comments and recommendations should be submitted to the Director, Office of Recombinant DNA Activities, Building 31, Room 4A52, National Institutes of Health, Bethesda, Maryland 20205. All comments received in timely response to this notice will be considered and will be available for public inspection in the above office on weekdays between the hours of 8:30 a.m. and 5:00 p.m.

FOR FURTHER INFORMATION CONTACT: Background documentation and additional information can be obtained from Drs. Stanley Barban or Elizabeth Milewski, Office of Recombinant DNA Activities, National Institutes of Health, Bethesda, Maryland 20205, (301) 496-6051.

SUPPLEMENTARY INFORMATION: The National Institutes of Health will consider the following changes and amendments under the Guidelines for Research Involving Recombinant DNA Molecules, as well as actions under these Guidelines.

1. *Request to Include Streptococcus Faecalis and Streptococcus Sanguis in Appendix A.*

Dr. Donald Clewell of the University of Michigan has requested that *Streptococcus faecalis* and *Streptococcus sanguis* be included in a sublist of Appendix A of the Guidelines on the basis that they exchange genetic information by known physiological processes. Dr. Clewell has provided information on these species in a letter to ORDA.

2. *Proposed Containment for Experiments Involving Non-Pathogens.*

Dr. Winston Brill, RAC member, has proposed that the Guidelines be amended to permit recombinant DNA experiments involving non-pathogenic prokaryotes and lower eukaryotes under P1 containment conditions.

A. A new Section, III-O-2, would be added to the Guidelines, as follows:

"III-O-2. *Experiments Involving Non-Pathogenic Prokaryotes and Lower Eukaryotes.* Recombinant DNA experiments involving prokaryotes and lower eukaryotes, nonpathogenic [2A] for man, animals, or plants, can be conducted under P1 containment.

B. A new paragraph would be added just before Section III-O begins, as follows:

"When the reader finds that the containment level given for the same experiment is different in two different sections within Part III, he may choose which of the two levels he wishes to use for the experiment."

C. The second paragraph of Section III-B-3 would be deleted. Revised Section III-B-3 would read as follows:

"III-B-3. *Non-HV1 Systems.* Containment levels for other classes of experiments involving non-HV1 systems may be approved by the Director, NIH (See Sections IV-E-1-b-(1)-(b), IV-E-1-b-(2)-(c), and IV-E-1-b-(3)-(b)).

D. Section IV-E-1-b-2-(f) would be deleted. This Section currently reads as follows:

"IV-E-1-b-(2)-(f). Assigning containment levels for experiments in which both donor and recipient are non-

pathogenic prokaryotes (see Section III-B-3)."

3. *Proposed Application Procedures for Minor Modifications of Previously Approved Large-Scale Recombinant DNA Experiments.*

A Working Group of the Recombinant DNA Advisory Committee (RAC) has requested that the following language outlining proposed procedures for minor modifications of previously approved large-scale recombinant DNA experiments be published in the Federal Register for public comment:

"Procedures have been developed for considering applications to grow more than ten liters of an organism containing recombinant DNA. These procedures include consideration of the request by a working group of the NIH Recombinant DNA Advisory Committee, submission of the request to the full RAC after consideration by the working group, and subsequent submission to the Director, NIH, for final review. This procedure has taken a minimum of two months. Therefore, the following procedures are proposed to expedite consideration of requests to grow more than ten liters of recombinant DNA-containing organisms when these proposals represent minor modifications of previously approved experiments. Modifications include deletion of sequences from the recombinant DNA, changes in promoters, addition of short segments not affecting the nature of the expressed products, and minor changes in the properties of the host. Changes are considered minor if they do not affect either the containment properties of the vector or the host, or the nature of products made, or add new products. Therefore, the procedures for dealing with minor modifications have the objective of determining that the change is indeed minor. To determine whether a change is minor, two levels of review will take place: (1) By ORDA, which will decide upon receipt of a request to process it as a new request or as a minor modification, and in the latter case (2) by a working group of at least two members of RAC."

The Working Group has proposed that the following language be added to the "Application Procedures for Large-Scale Recombinant DNA Experiments":

"6. Proposals that the submitter considers to represent minor modifications of already approved experiments will be handled by an expedited procedure. A request must be submitted to ORDA. This request should include the changes made, the way in which these changes were made (e.g., mutagenesis, recloning), and the nature and results of any tests done to determine that no major change has occurred (e.g., restriction enzyme analysis, tests for produced products, tests of vector mobilization).

"ORDA will determine whether the submission represents a minor modification of an approved experiment. If so, the request will be submitted promptly to a working group of at least two RAC members. If possible, these members should have been present at the RAC discussion of approval of the original experiment. If any member of the working group does not agree that the request represents a minor modification, the application will then be referred to the full RAC at its next meeting. If the working group is unanimous in concluding that the changes do not alter the organism in a way that is likely to affect containment of the organism or the vector, or the nature of the expressed product, significantly from that presented originally to RAC, recommendation for approval will be transmitted to ORDA, and, through ORDA, to the submitters. Consideration of requests by working groups should explicitly address the following issues: Is the change likely to compromise biological containment provided by the host or the vector? Does the change add to the biological activities associated with the expressed products in a way not considered by the original submission?"

4. *Request to Clone Saccharomyces Cerevisiae DNA in Tetrahymena.*

Dr. Eduardo Orias of the University of California, Santa Barbara, requests permission to clone *Saccharomyces cerevisiae* DNA in *Tetrahymena thermophila* using *S. cerevisiae/E. coli* hybrid plasmids.

5. *Proposal to Amend Item 4 of Appendix E.*

Dr. Clarence Kado of the University of California, Davis, has proposed that the fourth entry in appendix E be modified to read as follows:

"Cloned desired fragment from any non-prohibited source may be transferred into *Agrobacterium tumefaciens* containing a Ti plasmid (or derivates thereof), using a nonconjugative *E. coli* plasmid vector coupled to a fragment of the Ti plasmid and/or the orgin of replication of an *Agrobacterium* plasmid, under containment conditions that would be required for the desired DNA in HV1 systems (i.e., that specified in the subsections of Section (III-A). Transfer into plant parts or cells in culture would be permitted at the same containment level."

6. *Request for Lowering of Containment Under Entry Four of Appendix E.*

Dr. Mary-Dell Chilton of Washington University in St. Louis requests a reduction in physical containment for the manipulation in *Agrobacterium tumefaciens* of (1) the *Saccharomyces cerevisiae* alcohol dehydrogenase 1 gene cloned in pBR322, and (2) the gene coding for the maize (Zea mays) seed storage protein zein, cloned in Charon 4A. The cloned DNA and the vectors will be introduced into tobacco plants. Appendix E, entry four, currently sets containment for such experiments at P3. Dr. Chilton requests approval for these experiments under P2 physical containment. Her justification is outlined in a letter to ORDA.

7. *Request for HV1 Certification of a Schizosaccharomyces Pombe Host-Vector System and Inclusion in Section III-O.*

Dr. Benjamin D. Hall of the University of Washington requests that the fission yeast, *Schizosaccharomyces pombe*, together with yeast-*E. coli* hybrid recombinant plasmids be certified as an HV1 host-vector system. Dr. Hall in addition requests that this system be included under Section III-O. He has provided ORDA with supporting documentation.

Dated: November 20, 1980.

Donald S. Fredrickson,

Director, National Institutes of Health.

Note.—OMB's "Manadatory Information Requirements for Federal Assistance Program Announcements" (45 FR 39592) requires a statement concerning the official government programs contained in the *Catalog of Federal Domestic Assistance*. Normally NIH lists in its announcements the number and title of affected individual programs for the guidance of the public. Because the guidance in this notice covers not only virtually every NIH program but also essentially every federal research program in which DNA recombinant molecule techniques could be used, it has been determined to be not cost effective or in the public interest to attempt to list these programs. Such a list would likely require several additional pages. In addition, NIH could not be certain that every federal program would be included as many federal agencies, as well as private organizations, both national and international, have elected to follow the NIH Guidelines. In lieu of the individual program listing, NIH invites readers to direct questions to the information address above about whether individual programs listed in the *Catalog of Federal Domestic Assistance* are affected.

NIH programs are not covered by OMB Circular A-95 because they fit the description of "programs not considered appropriate" in Section 8-(b)-(4) and (5) of that Circular.

[FR Doc. 80-37014 Filed 11-26-80; 8:45 am]

BILLING CODE 4110-08-M

federal register

Friday
November 28, 1980

Part VIII

Environmental Protection Agency

Standards of Performance for New Stationary Sources; Surface Coating of Metal Furniture

ENVIRONMENTAL PROTECTION AGENCY

40 CFR Part 60

AD-FRL 1533-7]

Standards of Performance for New Stationary Sources; Surface Coating of Metal Furniture

AGENCY: Environmental Protection Agency (EPA).

ACTION: Proposed rule and notice of public hearing.

SUMMARY: The proposed standards of performance would limit emissions of volatile organic compounds (VOC) from new, modified, and reconstructed metal furniture surface coating facilities. The proposed emission limit is 0.70 kilogram of VOC per liter of coating solids applied. Reference Method 24 would be used to determine the VOC content or organic coating materials and Reference Method 25 would be used to determine the VOC concentration in an exhaust gas stream. Both reference methods were promulgated on October 3, 1980, (45 FR 65956). The proposed standards implement Section 111 of the Clean Air Act and are based on the Administrator's determination that surface coating of metal furniture contributes significantly to air pollution. The intent is to require new, modified, and reconstructed metal furniture surface coating facilities to use the best demonstrated system of continuous emission reduction, considering costs, nonair quality health, and environmental and energy impacts.

A public hearing will be held to provide interested persons an opportunity for oral presentation of data, views, or arguments concerning the proposed standards.

DATES: *Comments.* Comments must be received on or before February 8, 1981.

Public Hearing. A public hearing will be held on January 9, 1981 beginning at 9:00 a.m.

Request to Speak at Hearing. Persons wishing to present oral testimony must contact EPA by January 2, 1981.

ADDRESSES: *Coments.* Comments should be submitted (in duplicate if possible) to: Central Docket Section (A-130), Attention: Docket Number A-79-47, U.S. Environmental Protection Agency, 401 M Street, S.W., Washington, D.C. 20460.

Public Hearing. The public hearing will be held at the Environmental Research Center Auditorium, Research Triangle Park, N.C. Persons wishing to present oral testimony should notify Ms. Deanna Tilley, Standards Development Branch (MD-13), U.S. Environmental Protection Agency, Research Triangle Park, North Carolina 27711, telephone number (919) 541-5477.

Background Information Document. The Background Information Document (BID) for the proposed standards may be obtained from the U.S. EPA Library (MD-35), Research Triangle Park, North Carolina 27711, telephone number (919) 541-2777. Please refer to "Surface Coating of Metal Furniture—Background Information for Proposed Standards," EPA-450/3-80-007a.

Docket. Docket No. A-79-47, containing supporting information used in developing the proposed standards, is available for public inspection and copying between 8:00 a.m. and 4:00 p.m., Monday through Friday, at EPA's Central Docket Section, West Tower Lobby, Gallery 1, Waterside Mall, 401 M Street, SW, Washington, D.C. 20460. A reasonable fee may be charged for copying.

FOR FURTHER INFORMATION CONTACT: Mr. Gene W. Smith, Standards Development Branch, Emission Standards and Engineering Division (MD-13), U.S. Environmental Protection Agency, Research Triangle Park, North Carolina 27711, telephone number (919) 541-5421.

SUPPLEMENTARY INFORMATION:

Proposed Standards

The proposed new source performance standards (NSPS) would apply to new surface coating facilities at metal furniture manufacturing plants. In addition, existing surface coating facilities would be covered if they were to undergo a modification that would result in an increase of VOC emissions or a reconstruction. Emission of VOC from each affected facility would be limited to 0.70 kilogram of VOC per liter of coating solids applied. This numerical emission limit takes into account the mass of VOC per liter of coating solids in the paint and the transfer efficiency with which it is applied to yield the mass of VOC per liter of coating solids applied. The numerical emission limit could be met by the use of high solids coatings (i.e., 68 percent by volume solids coating with a solvent density of 0.88 kilogram per liter) applied at a 60 percent transfer efficiency. Transfer efficiencies of 60 percent or greater can be attained when applying high solids coatings with manual or automatic electrostatic spraying equipment.

The proposed standards could also be met with the use of other coating types applied by various application techniques. Examples of these include waterborne coatings (equivalent in emissions reduction to a 75 percent solids coating) applied by electrostatic, air or airless spray, dip, electrodeposition, or flow techniques; powder coatings (100 percent solids) applied by electrostatic spray or fluidized bed; and paints with lower solids content (less than the 68 percent by volume solids coating) if the increased solvent content is offset by higher transfer efficiencies.

The proposed standards could also be met with an emission control system which consists of a capture system and an emission control device or a combination of an emission control system and a low-organic-solvent coating (high solids or waterborne). Either of these methods would be acceptable if the owner or operator could show the Administrator that the control technology would achieve the proposed standards.

Although none of these control options are universally applicable, at least one option is available for all products produced by the metal furniture industry.

To determine compliance, performance tests would be conducted each calendar month. This would consist of calculating the monthly weighted average mass of VOC per volume of coating solids applied using the transfer efficiency values provided in the proposed standards. The owner or operator would obtain the information necessary to calculate emissions from formulation data supplied by the manufacturer of the coating or from an analysis of each coating by Reference Method 24 or by an equivalent or alternative method acceptable to the Administrator. Coating and organic solvent usage data would be obtained from company records. In the case of a question regarding the VOC content of coatings, Reference Method 24 would serve as the means by which the VOC content of the coating, and the resultant emissions, would be determined. Violations would be reported within 10 calendar days after the end of the calendar month.

When an incinerator is used to achieve compliance, Method 25 would be used during an initial 3-hour compliance test to determine the control efficiency. During this initial compliance testing with Method 25 the incinerator combustion temperature would be recorded and reported. The proposed standards also contain performance test provisions for an affected facility that uses an organic-solvent recovery system to attain compliance. The owner or operator would be required to calculate, by the equations contained in the proposed standards, the uncontrolled VOC emissions from each affected facility and the emissions reduction achieved by the recovery device. The owner or operator would also be

required to record daily the amount of organic solvent recovered by the system.

EPA estimates that the proposed standards would affect 800 new and 1,200 modified or reconstructed sources between 1980 and 1985.

Summary of Environmental, Energy, and Economic Impacts

The typical "uncontrolled" metal furniture manufacturer applies paint that contains about 35 percent by volume solids. In contrast, a Control Techniques Guideline (CTG) document entitled "Control of Volatile Organic Emissions from Existing Stationary Sources, Volume III: Surface Coating of Metal Furniture" (EPA-450/2-77-032) which defines reasonably available control technology (RACT) recommends that a 60 percent by volume solids coating be adopted by States in their State Implementation Plans (SIPs). The same metal furniture manufacturer applying a CTG-complying coating would emit about 60 percent less VOC than when applying the uncontrolled coating. It is estimated that this CTG recommendation could reduce emissions of VOC from about 49.8 megagrams per year to about 19.4 megagrams per year. The proposed standards would reduce VOC emissions to about 13.7 megagrams per year for the typical plant which is an additional 30 percent emission reduction below the CTG recommendation. Also, when compared to uncontrolled emissions, the proposed standards would reduce national VOC emissions from new, modified, and reconstructed facilities by about 58 gigagrams during the fifth year.

The impact of the proposed standards on water pollution would depend on the control option selected. For example, water use in spray booths would be unnecessary when powder coatings are used. Therefore, there would be a decrease in wastewater discharged when the proposed standards are met by employing powder coatings. Wastewater discharges could be expected not to increase for plants which utilize high solids and waterborne coatings. The quality of wastewater discharged is expected to remain the same for plants that apply high solids coatings when compared to that from plants that apply solvent-borne coatings. However, the quality of wastewater discharged from plants applying waterborne coatings could be reduced because these coatings contain water-miscible solvents. Finally, where incineration is used, the water pollution impact would depend on the type of coating used.

The impact on solid waste generation also depends on the control option selected. Powder coatings are generally recycled so that there is little waste. High solids and waterborne coatings produce about the same amount of solid waste as solvent-borne coatings. The use of emission control systems on a bake oven is expected to have no effect on the amount of solid waste generated from the types of coatings applied.

Energy savings could be possible for all uncontrolled coating facilities that employ any of the available control options to meet the proposed standards. Compliance with the proposed standards by using a 68 percent of volume solids coating would result in an energy savings of up to 8.9 petajoules over the first 5 years of the proposed standards due to a decrease in solvent usage. This is equivalent to approximately 230,000 cubic meters (1.45 million barrels) of crude oil.

For a typical metal furniture manufacturer complying with the recommended CTG, energy requirements would vary depending upon which control option is employed to meet the proposed standards. Energy consumption would decrease by about 20 percent (1500 gigajoules) if powder coatings were used. Energy consumption would increase, however, with the use of waterborne coatings or with incineration plus a CTG coating by about 3 percent (230 gigajoules) and 7 percent (520 gigajoules), respectively.

The economic impact summary presented in this section is based on the total anticipated costs of constructing and operating a new coating facility. Many of the control options considered involve a redesigning of the coating facility rather than simply adding equipment to an existing design. Usually powder coatings and waterborne coatings, for example, could not be applied in a spray booth equipped to use a solvent-based coating. For this reason, the capital and annualized costs represent a comparison of the total cost of each type of controlled facility rather than an incremental difference in the cost of each type of facility.

For a new typical spray coating facility with two painting lines the initial capital and annualized costs do not vary significantly regardless of which control option would be employed to comply with the proposed standards. Capital costs for each facility using the different control options are expected to range from about $960,000 (high solids coatings) to about $1,200,000 (waterborne coatings). The capital cost for a typical CTG coating facility or a typical uncontrolled coating facility would be about $960,000. The industrywide incremental capital cost of complying with the proposed standards over the first 5 years is expected to range from zero to $252,000,000 depending upon line changes because of the selected control option. This range is based on the projection of 2,000 affected facilities during the first 5 years of the proposed standards. The initial annualized costs for the different control options would range from about $600,000 to $700,000. These initial annualized costs would be comparable to the initial annualized costs for a typical CTG coating facility ($620,000) and a typical uncontrolled facility ($630,000).

Total annualized costs (or savings) vary depending upon which control option would be employed to comply with the proposed standards for all new, modified, and reconstructed spray coating plants (e.g., large, medium, and small sizes). For these facilities the fifth year industrywide annualized costs for incineration, and for waterborne coatings, would be about $18,000,000. An industrywide savings of $15,000,000 would result in the fifth year if high solids coatings were used. The total industrywide annualized costs for powder coatings could vary from a savings of $2,000,000 to a cost of $126,000,000 depending upon achieved coating thickness and other factors. The projected industrywide annualized cost to comply with the proposed standards, based on an anticipated mix of low-organic-solvent coatings, would be about $11,000,000.

The economic impacts of the proposed standards were evaluated based upon reduced profitability, inflationary impact, and expected price increases. The highest profit impairment is expected for small metal furniture manufacturers (4,000 liters of coatings consumed annually) regardless of control option. The maximum impact could result in about a 1.3 percent increase in the wholesale price of a metal furniture product from the small manufacturer.

Several industry representatives submitted comments, following the National Air Pollution Control Techniques Advisory Committee (NAPCTAC) presentation, related to the anticipated economic impact of the proposed standards. These comments, along with the supporting data provided, have been incorporated into the BID and are reflected in the preceding summary. However, the Administrator welcomes additional comments related to the economic impact analysis. Comments should contain specific information and data pertinent to the issue and suggested alternative courses of action that would avoid this impact.

Rationale

Selection of Source for Control

The "Priority List and Additions to the List of Categories of Stationary Sources," promulgated at 44 FR 49222 on August 21, 1979, ranked sources according to the impact that the standards promulgated in 1980 would have on emissions and public health in 1990. The surface coating of metal furniture is listed as a minor source category on this listing. This classification as a minor source is due primarily to the fact that individual metal furniture surface coating facilities typically emit less than 100 tons of VOC per year. However, the Priority List states that "the metal furniture coating industry is also a significant source of VOC emissions, and there are over 300 existing facilities with the potential to emit more than 100 tons per year."

There are approximately 1,400 metal furniture manufacturing establishments in the United States which paint their products. These metal furniture manufacturers are located throughout the country and are generally situated in highly populated urban areas. In fact, 70 percent of the industry is concentrated in nine highly populated states. The size range of these establishments and the types of metal furniture products produced are diverse. A large metal furniture manufacturer may have six or more coating lines while a small manufacturer may have only one coating line. The total number of coating lines in this industry is estimated to be about 3,100. This is approximately two coating lines for each establishment, which is considered to be a "typical" manufacturer. This typical manufacturer would consume from 67,600 to 87,000 liters of coating annually, and paint 780,000 square meters of metal furniture products. About 85 percent of the new coating lines are expected to apply paint by spraying methods.

The metal furniture industry emits about 95.5 gigagrams (1975 data) of VOC per year. The emissions of VOC result from usage of solvent-borne coatings by the industry. These paints contain organic solvent mixtures of aromatics, saturated and unsaturated aliphatics, alcohols, ketones, esters, and ethers. The emissions of these organic solvents contribute to ozone formation in urban atmospheres. EPA has established a National Ambient Air Quality Standard (NAAQS) for ozone of 0.12 microgram per cubic meter which is currently exceeded in those states where metal furniture manufacturing establishments are concentrated. Information concerning health and welfare effects associated with ozone can be found in "Air Quality Criteria for Ozone and Other Photochemical Oxidants," EPA-600/8-78-004, April 1978.

Moreover, the metal furniture industry is projected to have an annual growth rate of 4 percent. The growth rate is expected to remain at this level through 1985. Based on this growth, the industry will contribute increasing amounts of VOC to urban atmospheres.

Therefore, industrial surface coating of metal furniture was selected for regulation. This selection is based upon the metal furniture industry's priority listing, the number of affected facilities, painting method, the yearly VOC emission rate, the growth rate of the industry, and the location of this industry in or near highly populated urban areas.

Selection of Pollutants and Affected Facilities

Metal furniture manufacturers emit both particulate matter and VOC. Particulate matter is presently being controlled by the industry; however, VOC emissions are not controlled. They are emitted from the coating application, touch-up, flash-off, and bake oven areas. VOC emissions occur when the coating is applied and while the coated metal furniture part travels on a conveyor line through the application area. The coating on the metal furniture parts traveling on a conveyor line is the source of VOC in the flash-off and bake oven areas. The remainder of the operations at a metal furniture manufacturing plant are not included in the proposed standards because these are not significant sources of VOC. Touch-up operations are not included because they consume very little paint in comparison to the total amount of paint used in the coating application area. Clean-up operations would not be regulated under the proposed standards because VOC emissions from these operations are very difficult to quantify and control. Therefore, the affected facility is the combined coating application area, flash-off area, and bake oven area. This combination was selected as the affected facility because emissions from each area and their controls relate directly to the coating of the product.

The last consideration made concerning the affected facility was whether or not to establish a lower "cutoff" level of paint consumption in order to exempt smaller facilities from the proposed standards. The approach employed was to consider a cutoff level based on the amount of paint used or the capacity of the coating line. However, no cutoff level was established because of the possibility of wide variations in the amount of paint consumed yearly. The variability in the amount of paint consumed is a function of the economy. As a result, the consumption rate of paint may vary significantly from year to year. Several methods of determining the rated capacity of a coating line were investigated, but no decision was reached as to which would be most equitable. The Administrator specifically invites comments concerning this issue. Any comments submitted to the Administrator on this issue, however, should contain specific information and data pertinent to an evaluation of the magnitude and severity of any adverse impact and suggest alternative courses of action to avoid this impact.

Selection of Basis of Proposed Standards

Three control technologies were identified for reducing VOC emissions from metal furniture coating lines: (1) low-organic-solvent coatings, (2) transfer efficiency improvements based on coating application technique, and (3) emission control systems. Low-organic-solvent coatings include powder, high solids, and waterborne coatings. All of these coatings are presently being applied to metal furniture parts. None of the three types of coatings, however, are universally applicable for all metal furniture products because of differences in appearance needs, desired film thickness, required color changes, and other customer demands.

Powder coatings offer the largest emission reduction because they do not contain organic solvents. Powder coatings are applied by either electrostatic spraying devices or fluidized bed processes. Application of powder coatings to metal furniture parts by electrostatic spraying requires electrically charging the powder particles which are then attracted to the grounded part. In contrast, in the fluidized bed process the metal part is preheated, then dipped into a bed of air-fluidized particles. Both thermoset and thermoplastic powder coatings are being successfully applied in the metal furniture industry. Thermoset powders harden during heating as a result of cross-linking or polymerizing of the resin in the coating. Thermoplastic powders soften with the application of heat and resolidify during cooling. Powder coatings are normally selected when a thick and durable coating is required. However, thinner film thicknesses are now being achieved with thermoset powders. Powder coatings are applied electrostatically at thicknesses from 2.54×10^{-2} to 20.3×10^{-2} millimeters (1.0 to

8.0 mils). Coating thicknesses achieved with the fluidized bed process range from 15.2×10^{-2} to 152×10^{-2} millimeters (6.0 to 60 mils). Powder coatings cannot be used, however, at facilities requiring a large number (greater than 10) of color changes per day.

Coatings containing from 50 to 80 percent by volume solids are being applied to metal furniture parts instead of conventional solvent-borne coatings that contain 25 to 35 percent by volume solids. These coatings reduce VOC emissions by replacing much of the organic solvent with solids. For a 68 percent by volume solids coating, the VOC emission reduction achieved relative to an uncontrolled and a CTG coating is 73 and 30 percent, respectively. The use of coatings containing up to 68 percent solids is demonstrated in this industry with all applicable electrostatic spraying techniques, including guns, disks, and bells. Although coatings containing greater than 68 percent solids are currently being applied in the industry, their use has not been adequately demonstrated using a manual electrostatic spraying device. At present, the majority of the metal furniture industry using high solids coatings applies single-component heat-converted materials. These coatings form a film when they are cured inside an oven. Coating thicknesses achieved range from 2.54×10^{-2} to 3.81×10^{-2} millimeters (1.0 to 1.5 mils). Several metal furniture facilities using high solids coatings are complying with existing SIP regulations based upon the CTG-recommended coating. High solids coatings cannot be used, however, when a facility desires an especially thick coating or when the method of application is dip or flow coating.

Waterborne coatings are applied by spray, dip, electrodeposition, or flow techniques. All four application methods are used in the metal furniture industry. The majority of waterborne coatings currently applied contain about an 82/18 water-to-organic solvent ratio, with 35 percent by volume solids present in the paint. Waterborne coatings applied by the electrodeposition process usually contain less solids by volume. These coatings are able to achieve coating thicknesses comparable to conventional organic solvent-based coatings. Substitution of a typical waterborne coating applied by electrostatic spraying or dipping could be expected to reduce VOC emmissions relative to the uncontrolled and CTG-recommended facilities by about 80 and 50 percent, respectively. A waterborne coating applied by electrodeposition reduces VOC emissions for the uncontrolled and CTG-recommended facilities by about 95 and 85 percent, respectively. As with powder and high solids coatings, waterborne coatings cannot be used in all cases because of the limited film thicknesses achievable and the problems associated with electrostatically spraying such a highly conductive material.

The second control technology is improvement of transfer efficiency, based upon the method employed to apply the coating. Transfer efficiency defines the effectiveness at which solids are applied to the metal furniture part. The lower the transfer efficiency, the higher the VOC emission rates because more coating must be used to achieve the same thickness. The lowest transfer efficiencies reported range from 25 to 50 percent; these are for air and airless spraying equipment. Higher transfer efficiencies (60 to 95 percent) for spraying equipment are obtained with the electrostatic type equipment. The transfer efficiency of 60 percent represents the lower end of a range of efficiencies reported by paint suppliers and application equipment vendors. Therefore, 60-percent transfer efficiency was selected as the basis for the proposed standards. Although the highest transfer efficiencies are achieved with dip, electrodeposition, and flow coating techniques, about 85 percent of this industry uses traditional spraying techniques.

The only emission control system known to be in use in this industry is an incinerator, located at one plant. This incinerator is used to control VOC emissions from a bake oven. Incineration of VOC emissions is about 96 percent efficient. This efficiency was determined from stack test data obtained by EPA during the development of the proposed standard for automobile and light-duty truck surface coating operations.

Specific control options selected from the available control technologies include 65 and 70 percent by volume solids coatings, waterborne coatings, powder coatings, and a CTG-complying coating plus incineration. Based upon a comparison with CTG level of control (i.e., 60 percent by volume solids coating), four regulatory alternatives were established. These regulatory alternatives (labeled I, II, III, and IV) require, respectively, no additional control above the CTG (no NSPS), 30 percent above the CTG, 50 percent above the CTG, and 85 percent above the CTG.

All of the control option may be employed to achieve Regulatory Alternatives I and II. Regulatory Alternative III requires the use of waterborne coatings or a control options that provides equal or higher emission reduction.

Regulatory Alternative IV is based upon the highest emission reduction that may be achieved above the CTG-recommended level of control for a spray and dip coating line. The highest emission reduction for the spray coating line is about 99 percent (powder coatings), and the highest for a dip coating line is about 85 percent (waterborne applied by electrodeposition). As a result, VOC emission reduction above CTG-recommended requirements for Regulatory Alternative IV was established at 85 percent so that both powder and waterborne (electrodeposition) may be employed to achieve the designated emission reduction.

Environmental impacts were also evaluated for the four regulatory alternatives. None of the alternatives resulted in increased solid waste generation or decreased water quality. Also, when compared to uncontrolled facilities, there are energy savings possible with each regulatory alternative. The energy impact for a facility complying with the CTG-recommended level is about the same as that for each regulatory alternative.

For all regulatory alternatives the estimated total capaital costs are about the same. However, total annualized costs for the first 5 years of the proposed standards would vary depending on which control option is utilized to achieve the control level specified by each regulatory alternative. If coatings containing 60 to 70 percent by volume solids are employed to comply with Regulatory Alternatives I and II, there is a potential for annualized savings. Regulatory Alternative III results in the highest annualized costs if waterborne coatings are employed to achieve the required regulatory alternative.

The proposed standards are based on Regulatory Alternative II. This selection was based on the decision that all estimated impacts associated with Regulatory Alternative II were considered to be reasonable. This alternative also provides all facilities with at least one control option that could be used to comply with the proposed standards. Basing the proposed standards on an alternative that would require the use of waterborne or powder coatings would preclude the use of high solids coatings. This approach would prevent some facilities from complying with the proposed standards because of their inability to use powder or waterborne

coatings. Basing the proposed standards on the use of incineration was rejected because of the cost and energy impacts associated with this option. There is also a potential for an annualized cost saving with Regulatory Alternative II.

Selection of Format of Proposed Standards

A number of difference formats for the proposed standards are available. The format ultimately selected must be compatible with any of the control options that could be used to comply with the proposed standards. The formats considered were emission limits expressed in terms of: (1) the concentration of VOC emissions in the exhaust gases discharged to the atmosphere; (2) overall control efficiency; (3) mass of VOC emissions per unit of production; (4) mass of VOC emissions per volume of coating (less water); and (5) mass of VOC emissions per volume of coating solids applied.

The major advantage of a concentration format is simplicity of enforcement. Compliance could be directly measured using Reference Method 25. There are, however, two significant drawbacks to the use of this format. Regardless of the control approach chosen, emission testing would be required for each stack exhausting gases from the surface coating operations. Another potential problem with this format is the difficulty of determining whether dilution air is intentionally added to reduce the concentration of VOC in the gases discharged to the atmophere, or whether the air is added to the application or drying operations to optimize performance and maintain a safe working space. The concentration format therefore, is unacceptable.

A control efficiency format would require coating facilities to reduce emissions by a specified percentage. This has the advantage of allowing each facility to use whatever method is preferred to reduce the emissions. The disadvantage is that a baseline emission rate must be established for each facility to determine how much the emissions must be reduced to comply with the proposed standards. This baseline is likely to vary from plant to plant. In addition, this type of format would require well operated facilities to reduce emissions by the same percentage as poorly operated facilities. This could place the well-operated coating facilities at an economic disadvantage relative to their competitors. For these reasons, this format was not selected.

A format of mass of VOC emissions per unit of production would relate emissions to individual plant production on a direct basis. Where high solids or conventionally applied waterborne coatings are employed, the average VOC content of the coating materials could be determined by using Reference Method 24 or coating supplier's formulation. The volume of coating materials used and the percent solids could be determined from purchase records. VOC emissions could then be calculated by multiplying the VOC content of the coating materials by the volume of coating materials used in a given time period, and dividing the result by the number of furniture items produced during that time period. This would provide a VOC emission rate per unit of production. Consequently, procedures to determine compliance would be direct and straightforward. However, this procedure woud be very time consuming because it would require data collection every time the product mix was varied or a new part was added. In addition, this format would not account for the difference in surface coating requirements for various items due to size and configuration. This would result in a different emission standard for every piece of metal furniture coated. As a result, manufacturers of larger items would be required to reduce VOC emissions more than manufacturers of smaller items. For these reasons, this format was not selected.

The fourth format, mass of VOC emissions per volume of coating applied (minus water), is the one employed in the CTG document. The principal advantage of this format is that enforcement is relatively simple. However, one disadvantage is that transfer efficiency is not part of the format and as a result, a CTG or NSPS coating may emit more VOC than a non-complying coating because of the differences of obtainable transfer efficiencies due to different painting techniques. Also, it is difficult to determine a numerical limit for affected facilities using a new coating and add-on control equipment because this format does not consider transfer efficiency. As a result, this format was not selected.

The last format, which uses mass of VOC emissions per volume of coating solids applied, has the advantage of not requiring stack emission tests unless add-on emission control devices are used to comply with the proposed standards. Dilution air in the exhaust stream would not present a problem with this format. The problem of varyng part sizes and configurations would be eliminated because the format is in terms of volume of coating solids applied, which is independent of the surface area and number of items coated. This format would also allow flexibility in the selection of control systems because it is usable with any of the control methods. The format also takes into consideration the transfer efficiency of the coating technique. Because this format overcomes the varying dilution air and part size problems inherent with the other formats and considers transfer efficiency where other formats do not, it has been selected as the format for the proposed standards.

Selection of Numerical Emission Limit

The numerical emission limit selected for the proposed standards is 0.70 kilogram of VOC per liter of coating solids applied. This numerical emission limit is based on the selection of Regulatory Alternative II as the basis of the proposed standards. Regulatory Alternative II was previously defined as an additional 30 percent reduction in VOC emissions beyond that recommended in the CTG document. Establishing the numerical emission limit based upon Regulatory Alternative II permits each metal furniture manufacturer to select one of the available control options to achieve compliance. The numerical emission limit of the proposed standard could be calculated from the following conditions:

1. The use of a coating material containing 68 percent by volume solids.
2. The coating is applied at a transfer efficiency of 60 percent.
3. The solvents in the coating material have a density of 0.68 kilogram per liter.

These conditions are based on data provided by the metal furniture industry, and coating and application equipment vendors. Each of the conditions represents currently available technology which has been used successfully in the metal furniture industry.

For a coating system meeting the conditions stated above, the emission rate is calculated to be 0.70 kilogram of VOC per liter of coating solids applied. Due to the numerous emission reduction techniques available and the flexibility allowed by the format of the proposed standards, a variety of technologies may be used to meet the emission limit. The proposed standards can be achieved as a minimum by using any of the low-organic-solvent coatings, if applied electrostatically. Low-organic-solvent coatings applied by dip, flow, or electrodeposition techniques will also achieve the proposed numerical limit because of the high transfer efficiency of these methods. Powder coatings applied

by electrostatic spray or fluidized bed meet the proposed numerical limit. As a result, all of the control options can meet the proposed numerical limit.

Modification and Reconstruction Considerations

New source performance standards apply to modified and reconstructed, as well as to new facilities. Upon modification or reconstruction, an existing facility becomes an affected facility. The criteria for making modification and reconstruction determinations are presented in § 60.14 and § 60.15, respectively, of the general provisions of 40 CFR Part 60, and are applicable to all standards of performance promulgated under Section 111 of the Clean Air Act.

If the proposed standards go into effect, during the first 5 years there are expected to be about 2,000 affected facilities. Of these 2,000 affected facilities, approximately 60 percent are expected to be modified or reconstructed facilities, which would be required to comply with the proposed standards.

The metal furniture industry has expressed concern that expenditures made to comply with SIP requirements might bring the facility under the proposed standards as a reconstruction. The industry believes that it is unfair for compliance with one regulation to trigger coverage by a more stringent regulation. Comments are requested on the legality and economic consequences of an exemption from the reconstruction provisions under these circumstances. Any comments submitted to the Administrator, however, should contain specific information and data pertinent to an evaluation of the magnitude and severity of any adverse impact and suggested alternative courses of action that would avoid this impact.

Method of Determining Compliance

The procedure for determining monthly compliance with the proposed standards could vary depending on which control option is selected by the facility. The compliance determination procedure for all facilities begins as follows:

1. Calculate the mass of VOC, as applied, of all coating materials used during the calendar month for which the determination is being made. The data necessary to calculate the mass of VOC may be obtained from the coating formulator or through a coating analysis using Reference Method 24. When coating formulation data are used, the owner or operator must also include all dilution solvents added to the coating at the facility.

2. VOC emissions are then calculated by dividing the mass of VOC (step 1) by the multiplication product of the coating solids by volume applied and the appropriate transfer efficiency expressed as a decimal.

If the VOC emissions calculated in step 2 are greater than the proposed numerical emission limit, the facility is in violation of the proposed standards for the month and additional control is necessary. In situations where a lower solvent content coating or an increased transfer efficiency is used to bring the facility into compliance, the preceding steps are repeated in subsequent performance tests using the new set of conditions. However, if the facility chooses to achieve compliance by adding a control device, the following additional steps must be followed:

1. The initial compliance determination requires the use of Reference Method 25 to determine the VOC concentration in the effluent gas stream before and after the control device. Calculate the control efficiency of the device by using the test results.

2. Determine the percentage of the total VOC emissions from the facility which enter the emission control device.

3. Calculate the overall VOC emission reduction efficiency achieved by multiplying the percentage of VOC emissions which enter the control device (step 2) by the efficiency of the control device.

Detailed procedures, as well as the equations to be used for these calculations, are containd in the proposed standards. These procedures would require determining the VOC emissions from the coating materials used in each surface coating operation. This could be accomplished by periodic analysis of paint samples collected at the application area; however, such an analysis is expensive and time consuming. Paint companies routinely perform analyses of the solids and solvent content of the coatings they sell. This represents an inexpensive method of determining the VOC emissions from the coating. Therefore, a record of the coating supplier's coating formulation or analysis of the solvent and solids content of all coating materials purchased for each coating line within a plant would be required to be maintained. The Administrator would reserve the right to require Reference Method 24 testing to assure that compliance with the proposed standards is being achieved. This in itself, however, would not provide sufficient information to determine compliance because solvent paint dilutions may occur prior to paint application. In order to account for this, a record would also be required of all organic solvent which is purchased and used for the purpose of coating dilution by each coating line within the plant. This information would allow calculation of the total mass of VOC in all coatings consumed after viscosity control, thereby permitting determination of whether the applied coating formulation conforms to the requirements of the proposed standards.

Selection of Monitoring Requirements

Monitoring requirements are normally included in standards of performance to ensure that emission control requirements are met and that control devices are properly operated and maintained.

The owner or operator would be required to calculate and record the VOC emissions per volume of applied solids from each affected facility for each calendar month. Each monthly calculation would be considered a performance test. Where incineration is used to comply with the proposed standards, a monitoring device would be required to continuously record the combustion temperature of the control device. Following the performance test, the combustion temperature would be monitored and any period of more than 3 hours during which the temperature drops more than 50°C below the compliance test level would be reported quarterly.

Selection of Performance Test Methods

Performance tests would be required for add-on control devices to determine compliance with the proposed standards. Reference Method 25, "Determination of Total Gaseous Non-Methane Organic Emissions as Carbon," would be used to measure VOC concentration before and after the add-on control device. The estimated cost for conducting a test with this method before and after the control device is about $4,000.

The solids and organic solvent content of coatings would be determined based upon the paint supplier's coating formulation. However, Reference Method 24, "Determination of Volatile Organic Matter, Water Content, Density, Volume Solids, and Weight Solids of Surface Coatings," would be used to verify the paint supplier's data. This method combines several ASTM procedures which are published industry techniques.

Measurement of transfer efficiency would not be required for the proposed standards. Instead, transfer efficiency numbers are provided for each coating application technique. These numbers are based upon data collected from metal furniture manufacturers, paint

manufacturers, and paint application equipment manufacturers. However, if a manufacturer can justify to the Administrator's satisfaction that other values for transfer efficiencies are appropriate, the Administrator will approve their use on a case-by-case basis. In making this determination the Administrator will consider: (1) the surface area of all parts painted on the new coating line, (2) the number of parts painted, (3) the coating consumed and the procedures used to measure consumption, (4) the thickness of applied coating, and (5) the method of calculating transfer efficiency.

Impact of Reporting Requirements

During 1980 to 1985, there are expected to be about 2,000 affected facilities. The time required for compiling the initial compliance report for a typical spray painting plant (two coating lines) would be about 23 person-hours. The total time required by the industry for all of the affected facilities would be about 46,700 person-hours by 1985.

An additional report would be required for affected facilities that install a new add-on control device. For a typical plant the time required for performing the initial compliance test, compiling data and reviewing the test report would be about 400 person-hours. After the initial compliance test, the incinerator combustion temperature would be reported quarterly.

The Administrator specifically invites comments concerning the reporting requirements of the proposed standards. These requirements can be found in § 60.314 and § 60.315 of the proposed standards. Any comments submitted to the Administrator should contain specific information and data pertinent to an evaluation of the magnitude and severity of any adverse impact and should suggest alternative courses of action to avoid this impact. Recommended alternative reporting requirements should contain complete instructions and should state all the reasons why the recommended requirements would be considered an improvement.

Public Hearing

A public hearing will be held to discuss the proposed standards in accordance with Section 307(d)(5) of the Clean Air Act. Persons wishing to make oral presentations should contact EPA at the address given in the ADDRESSES section of this preamble. Oral presentations will be limited to 15 minute each. Any member of the public may file a written statement before, during, or within 30 days after the hearing. Written statements should be addressed to the Central Docket Section address given in the ADDRESSES section of this preamble.

A verbatim transcript of the hearing and written statements will be available for public inspection and copying during normal working hours at EPA's Central Docket Section in Washington, D.C. (see ADDRESSES section of this preamble).

Docket

The docket is an organized and complete file of all the information submitted to or otherwise considered in the development of this proposed rulemaking. The principal purposes of the docket are (1) to allow interested parties to readily identify and locate documents so that they can intelligently and effectively participate in the rulemaking process, and (2) to serve as the record in case of judicial review.

Miscellaneous

As prescribed by Section 111, establishment of standards of performance for surface coating of metal furniture was preceded by the Administrator's determination (40 CFR 60.16, 44 FR 49222, dated August 21, 1979), that these sources contribute signficantly to air pollution which may reasonably be anticipated to endanger public health or welfare. In accordance with Section 117 of the Act, publication of this proposal was preceded by consultation with appropriate advisory committees, independent experts, and Federal departments and agencies. The Administrator will welcome comments on all aspects of the proposed regulation, including economic and technological issues.

It should be noted that standards of performance for new sources established under Section 111 of the Clean Air Act reflect:

> * * * application of the best technological system of continuous emission reduction which (taking into consideration the cost of achieving such emission reduction, and nonair quality health and environmental impact and energy requirements) the Administrator determines has been adequately demonstrated [Section 111(a)(1)].

Although there may be an emission control technology available that can reduce emissions below those levels required to comply with standards of performance, this technology might not be selected as the basis of standards of performance due to costs associated with its use. Accordingly, standards of performance should not be viewed as the ultimate in achievable emission control. In fact, the Act requires (or has the potential for requiring) the imposition of a more stringent emission standard in several situations.

For example, applicable costs do not necessarily play as prominent a role in determining the "lowest achievable emission rate" (LAER) for new or modified source locating in nonattainment areas, i.e., those areas where statutorily-mandated health and welfare standards are being violated. In this respect, Section 173 of the Act requires that new or modified sources constructed in an area where ambient pollutant concentrations exceed NAAQS must reduce emissions to the level that reflects LAER, as defined in Section 171(3) for such category of source. The statute defines LAER as that rate of emissions based on the following, whichever is more stringent:

(A) the most stringent emission limitation which is contained in the implementation plan of any State for such class or category of source, unless the owner or operator of the proposed source demonstrates that such limitations are not achievable, or

(B) the most stringent emission limitation which is achieved in practice by such class or category of source.

In no event can the emission rate exceed any applicable new source performance standard [Section 171(3)].

A similar situation may arise under the prevention of significant deterioration of air quality provisions of the Act (Part C). These provisions require that certain sources [referred to in Section 169(1)] employ "best available control technology" (BACT) as defined in Section 169(3) for all pollutants regulated under the Act. Best available control technology must be determined on a case-by-case basis, taking energy, environmental and economic impacts, and other costs into account. In no event may the application of BACT result in emissions of any pollutants which will exceed the emissions allowed by any applicable standard established pursuant to Section 111 (or 112) of the Act.

In all events, SIPs approved or promulgated under Section 110 of the Act must provide for the attainment and maintenance of NAAQS designed to protect public health and welfare. For this purpose, SIPs must in some cases require greater emission reduction than those required by standards of performance for new sources.

Finally, States are free under Section 116 of the Act to establish even more stringent emission limits than those established under Section 111 or those necessary to attain or maintain the NAAQS under Section 110. Accordingly, new sources may in some cases be subject to limitations more stringent than standards of performance under Section 111, and prospective owners and

operators of new sources should be aware of this possibility in planning for such facilities.

This regulation will be reviewed four years from the date of promulgation as required by the Clean Air Act. This review will include an assessment of such factors as the need for integration with other programs, the existence of alternative methods, enforceability, and improvements in emission control technology and reporting requirements. The reporting requirements in this regulation will be reviewed as required under EPA's sunset policy for reporting requirements in regulations.

Section 317 of the Clean Air Act requires the Administrator to prepare an economic impact assessment for any new source standard of performance promulgated under Section 111(b) of the Act. An economic impact assessment was prepared for the proposed regulations and for other regulatory alternatives. All aspects of the assessment were considered in the formulation of the proposed standards to ensure that the proposed standards would represent the best system of emission reduction considering costs. The economic impact assessment is included in the Background Information Document.

Dated: November 21, 1980.

Douglas M. Costle

Administrator.

It is proposed that 40 CFR Part 60 be amended by adding a new Subpart EE as follows:

Subpart EE—Standards of Performance for Surface Coating of Metal Furniture

Sec.
60.310 Applicability and designation of affected facility.
60.311 Definitions and symbols.
60.312 Standards for volatile organic compounds.
60.313 Performance tests and compliance provisions.
60.314 Monitoring of emissions and operations.
60.315 Reporting and recordkeeping requirements.
60.316 Test methods and procedures.

Authority: Secs. 111, 114, and 301(a) of the Clean Air Act, as amended, (42 U.S.C. 7411, 7414, 7601(a)), and additional authority as noted below.

Subpart EE—Standards of Performance for Surface Coating of Metal Furniture

§ 60.310 Applicability and designation of affected facility.

(a) The affected facility to which the provisions of this subpart apply is the volatile organic compound (VOC) emitting portion of each metal furniture surface coating line which is defined as the paint application area, the flash-off area, and the bake oven area.

(b) This subpart applies to any affected facility on which construction, modification, or reconstruction is commenced after November 28, 1980.

§ 60.311 Definitions and symbols.

(a) All terms used in this subpart not defined below are given meaning in the Act and in Subpart A of this part.

"Bake oven" means a device which uses heat to dry or cure coatings.

"Dip coating" means a method of applying coatings in which the part is submerged in a tank filled with the coatings.

"Electrodeposition (EDP)" means a method of applying coatings in which the part is submerged in a tank filled with the coatings and in which an electrical potential is used to enhance deposition of the coatings on the part.

"Electrostatic spray application" means a spray application method that uses an electrical potential to increase the transfer efficiency of the coatings.

"Flash-off area" means the portion of a surface coating line between the coating application area and bake oven.

"Flow coating" means a method of applying coatings in which the part is carried through a chamber containing numerous nozzles which direct unatomized streams of coatings from many different angles onto the surface of the part.

"Spray application" means a method of applying coatings by atomizing and directing the atomized spray toward the part to be coated.

"Transfer efficiency" means the ratio of the amount of coating solids transferred onto the surface of a part or product to the total amount of coating solids used.

"VOC content" means all volatile organic compounds (VOC) that are in coatings and evaporate during the application, drying, or curing process. VOC are expressed in terms of kilograms of VOC per liter of coating solids applied.

(b) All symbols used in this subpart not defined below are given meaning in the Act and in Subpart A of this part.

C_{aj} = concentration in gas stream in the "jth" vent after control device (parts per million as carbon)

C_{bi} = concentration in gas stream in the "ith" vent before control device (parts per million as carbon)

C_k = concentration in gas stream in the "kth" uncontrolled vent (parts per million as carbon)

D_{ci} = density of the "ith" coating (kilogram per liter)

D_{dj} = density of the "jth" diluent VOC-solvent (kilogram per liter)

D_r = density of VOC-solvent recovered by emission control device (kilogram per liter)

E = emission control device efficiency (inlet versus outlet, fraction)

F = capture efficiency (captured versus potential, fraction)

G = weighted average mass of VOC per volume of coating solids applied (kilograms of VOC per liter of coating solids applied)

i = indexing subscript designating the "ith" coating or "ith" vent before control device, ranges from 1 to n

j = indexing subscript designating the "jth" diluent VOC-solvent or the "jth" vent after control device, ranges from 1 to m

k = indexing subscript designating the "kth" uncontrolled vent, ranges from 1 to n

L_{ci} = volume of "ith" coating, as received (liters)

L_{dj} = volume of "jth" diluent VOC-solvent added to coating (liters)

L_r = volume of VOC-solvent recovered by emission control device (liters)

L_s = volume of coating solids (liters)

M_d = mass of VOC-solvent added to coating for dilution purposes (kilograms)

M_o = mass of VOC-solvent in coating, as received (kilograms)

M_r = mass of VOC-solvent recovered by emission control device (kilograms)116L_{ci}=volume of "ith" coating, as received (liters)

L_{dj}=volume of "jth" diluent VOC-solvent added to coating (liters)

L_r=volume of VOC-colvent recovered by emission control device (liters)

L=volume of coating solids (liters)

M_d=mass of VOC-solvent added to coating for dilution purposes (kilograms)

M_o=mass of VOC-solvent in coating, as received (kilgrams)

M_r=mass of VOC-solvent recovered by emission control device (kilograms)

m=a known variable quantity of different diluent VOC-solvents or controlled vents

N=VOC emissions (kilograms of VOC per liter of coating solids applied)

n=a known variable quantity of coatings or vents

Q_{aj}=volumetric flow rate in the "jth" vent after control device (dry standard cubic meters per second)

Q_{bi}=volumetric flow rate in the "ith" vent before control device (dry standard cubic meters per second)

Q_k=volumetric flow rate in the "kth" uncontrolled vent (dry standard cubic meters per second)

R=overall VOC emission reduction efficiency (fraction)

T = transfer efficiency for each surface coating application method (fraction)
V_{si} = volume fraction of solids in the "ith" coating, as received (fraction)
W_{oi} = weight fraction of VOC-solvent in the "ith" coating, as received (fraction)
z = indexing subscript designating the "zth" control device

§ 60.312 Standards for volatile organic compounds (VOC).

(a) On and after the date on which the initial performance test required to be conducted by § 60.8(a) is completed, no owner or operator subject to the provisions of this subpart shall cause the discharge into the atmosphere of VOC emissions from any metal furniture coating line in excess of 0.70 kilogram of VOC per liter of coating solids applied.

§ 60.313 Performance tests and compliance provisions.

(a) Sections 60.8(d) and (f) do not apply to the performance test procedures required by this subpart.

(b) Each owner or operator of an affected facility shall conduct a performance test for each calendar month for each affected facility according to the procedures in this section, except as specified in § 60.315.

(1) Each owner or operator shall compute the weighted average mass of VOC per volume of coating solids applied for each month except as specified in § 60.313(c) and (d). Each monthly calculation is considered a performance test for the purposes of this subpart. Each owner or operator shall determine the composition of the coatings or by formulation data suppplied by the manufacturer of the coating or by analysis of each coating by Reference Method 24. The Administrator may require an owner or operator who uses manufacturer's formulation data to determine the VOC content of the coatings by Reference Method 24 or an equivalent or alternative method acceptable to the Administrator. Each owner or operator shall determine the coating and dilution solvent usage from company records. Each owner or operator shall obtain the density of each dilution solvent from the supplier of the dilution solvents. The weighted average mass of VOC per volume of coating solids applied for each month will be determined by the following procedures.

(2) Compute the mass of VOC from all coating materials, as applied, in any surface coating operation by the equation:

$$M_o + M_d = \sum_{i=1}^{n} L_{ci} D_{ci} W_{oi} + \sum_{j=1}^{n} L_{dj} D_{dj}$$

(3) Compute the total volume of coating solids used during each month by the equation:

$$L_s = \sum_{i=1}^{n} L_{ci} V_{si}$$

(4) Compute the weighted average mass of VOC per volume of coating solids applied by the equation:

$$G = \frac{M_o + M_d}{L_s T}$$

Values for transfer efficiency (fraction) are to be selected from the following table:

Application method	Transfer efficiency (T)
Air atomized spray	0.25
Airless spray	0.25
Manual electrostatic spray	0.60
Nonrotaional automatic electrostatic spray	0.70
Rotating head electrostatic spray (manual and automatic)	0.80
Dip coat	0.90
Flow coat	0.90
Electrodeposition	0.95
Powder application	0.95

If the owner or operator can justify to the Administrator's satisfaction that other values for transfer efficiencies are appropriate, the Administrator will approve their use on a case-by-case basis. Where more than one application method is used on an individual surface coating operation, the owner or operator shall perform an analysis to determine the relative volume of coating solids materials applied by each method. The owner or operator shall use these relative volumes of solids to compute a weighted average transfer efficiency for the operation. The Administrator will review and approve this analysis on a case-by-case basis.

(5) For affected facilities with no add-on control devices, N = G
Where N is less than or equal to 0.70 kilogram of VOC per liter of coating solids applied, compliance with § 60.312 is demonstrated and no further calculations are required.

(6) For affected facilities where N is greater than 0.70 kilogram of VOC per liter of coating solids applied, the facility is not in compliance with § 60.312. Compliance with § 60.312 may be achieved by a change to a lower-organic-solvent content type of coating material, through an increase in transfer efficiency or through the addition of an add-on control device.

(i) If an affected facility selects a change of coating materials, compliance must be demonstrated by performing the calculations described in § 60.313(b)(1), (2), (3), (4), and (5).

(ii) If compliance is to be demonstrated through an increase in transfer efficiency, the calculations described in § 60.313(b)(4) and (5) must be performed.

(iii) Where add-on emission control equipment is used, the control efficiency must be calculated as described in § 60.313(c) or (d):

(c) Each owner or operator subject to the provisions of this subpart, who uses an incinerator, shall determine compliance by the following procedures.

(1) The owner or operator shall use Reference Method 25 to determine the VOC concentration in the effluent gas before and after the emission control device for each stack that is equipped with an emission control device. The owner or operator shall use Reference Method 2 to determine the volumetric flow rate of the effluent gas before and after the emission control device on each stack.

(2) The owner or operator shall determine the fraction efficiency of each emission control device by the following equation:

$$E_z = \frac{\sum_{i=1}^{n} Q_{bi} C_{bi} - \sum_{j=1}^{m} Q_{aj} C_{aj}}{\sum_{i=1}^{n} Q_{bi} C_{bi}}$$

(3) The owner or operator shall determine capture efficiency of the incinerator by calculating the fraction of total VOC discharged from the surface coating line which enters each emission control device on that operation by the following equation:

$$F_z = \frac{\sum_{i=1}^{n} Q_{bi} C_{bi}}{\sum_{i=1}^{n} Q_{bi} C_{bi} + \sum_{k=1}^{m} Q_k C_k}$$

(4) The owner or operator shall determine the overall emission reduction efficiency of incineration systems by the following equation:

$$R = \sum_{z=1}^{n} E_z F_z$$

(5) The owner or operator shall determine the mass of VOC per volume of coating solids applied emitted after the control device(s) on the applicable surface coating line using the following equation:

$$N = G(1-R)$$

(6) For affected facilities where N is less than or equal to 0.70 kilogram of VOC per liter of coating solids applied, compliance with § 60.312 is demonstrated and no further calculations are required.

(7) For affected facilities where N is greater than 0.70 kilogram of VOC per liter of coating solids applied, the facility is not in compliance with § 60.312 for the month and additional control is required to bring the facility into compliance for future operation.

(d) Each owner or operator subject to the provisions of this subpart, who uses an emission control system that recovers the VOC in order to comply with § 60.312, shall determine compliance for each calendar month by the following procedures:

(1) Calculate the weighted average mass of VOC per volume of coating solids applied emitted after the control device(s) on the applicable surface coating line using the following procedure:

(i) Calculate the total mass of VOC recovered in the calendar month (kilograms) by the equation:

$$M_r = L_r D_r$$

(ii) Calculate the overall emission reduction efficiency of the solvent recovery system by the equation:

$$R = \frac{M_r}{M_o + M_d}$$

(iii) Calculate mass of VOC emitted by the equation:

$$N = G(1-R)$$

(2) For affected facilities where N is less than or equal to 0.70 kilogram of VOC per liter of coating solids applied, the facility has demonstrated compliance with § 60.312 and no further calculations are required.

(3) For affected facilities where N is greater than 0.70 kilogram of VOC per liter of coating solids applied, the facility is not in compliance with § 60.312 for the month and additional control is required to bring the facility into compliance for future operation.

§ 60.314 Monitoring of emissions and operations.

(a) The owner or operator of an affected facility which uses an incinerator to comply with the emission limits specified under § 60.312 shall install, calibrate, maintain, and operate temperature measurement devices acording to the following procedures:

(1) A temperature measurement device shall be installed in the firebox of each incinerator.

(2) Each temperature measurement device shall be installed, calibrated, and maintained according to accepted practice and the manufacturer's specifications. Each device shall have an accuracy of the greater of ± 0.75% of the temperature being measured expressed in degrees Celsius or ± 2.5°C.

(3) Each temperature measurement device shall be installed in a location that is representative of the temperature in the firebox of each incinerator.

(4) Each temperature measurement device shall be equipped with a recording device so that a permanent continuous record is produced.

(b) For the purposes of reports required under § 60.315, periods of excess emissions for incinerators are defined as any period of 3 hours or longer during which the average incinerator temperature, when the coating line is in operation, is more than 28° C (50° F) less than the average incinerator temperature during the most recent performance test at which the emission control device efficiency was determined as specified under § 60.313(c).

§ 60.315 Reporting and recordkeeping requirements.

(a) Each owner or operator of an affected facility shall include the following data in the initial performance test report required under § 60.8:

(1) Where compliance is achieved without the use of add-on control devices, the owner or operator shall report for each affected facility the weighted average mass of VOC per volume of coating solids applied during the calendar month.

(2) Where compliance is achieved through the use of incineration, the owner or operator shall include the following data in the initial performance test required under § 60.8(a) or subsequent performance tests during which Reference Method 25 is utilized.

(i) The combustion temperature,

(ii) The weighted average mass of VOC per volume of coating solids applied before and after the incinerator.

(iii) Capture efficiency,

(iv) The emission control device efficiency used to attain compliance with the applicable emission limit specified under § 60.312.

(b) Following the initial performance test report, each owner or operator of an affected facility shall record the weighted average mass of VOC per volume of coating solids applied for each affected facility during each calendar month and shall report within 10 calendar days each instance in which the weighted average is greater than the limit specified in § 60.312. Each monthly determination shall be considered a performance test.

(c) Where compliance with § 60.312 is achieved through the use of incineration,

the owner or operator shall continuously record the incinerator combustion temperature and report on a quarterly basis any periods of excess emissions which occurred during each month or submit a report indicating that no periods of excess emissions occurred.

(d) Where compliance with § 60.312 is achieved through the use of a solvent recovery system, the owner or operator shall record and maintain daily records of the amount of solvent recovered by the system for each affected facility.

(e) Each owner or operator subject to the provisions of this subpart shall maintain at the source, for a period of at least 2 years, all records, data, and calculations which were used to determine the VOC content of coatings and the weighted average mass of VOC per volume of coating solids applied for each affected facility.

(Sec. 114 of the Clean Air Act, as amended (42 U.S.C. 7414))

§ 60.316 Test methods and procedures.

(a) The reference methods in Appendix A to this part except as provided under § 60.8(b) shall be used to determine compliance with § 60.312 as follows:

(1) Method 24, or coating manufacturer's formulation date, for use in the determination of VOC content of each batch of coating as applied to the surface of the metal parts.

(2) Method 25 for the measurement of VOC concentration in the effluent gas entering and leaving the control device for each stack equipped with an emission control device.

(3) Method 1 for sample and velocity traverses.

(4) Method 2 for velocity and volumetric flow rate.

(5) Method 3 for gas analysis.

(6) Method 4 for stack gas moisture.

(b) For Method 24, the coating sample must be at least a 1 liter sample taken at a point where the sample will be representative of the coating material as applied to the surface of the metal part.

(c) For Method 25, the minimum sampling time for each run is 60 minutes and the minimum sample volume is 0.003 dry standard cubic meters except that shorter sampling times or smaller volumes, when necessitated by process variables or other factors, may be approved by the Administrator.

(Sec. 114 of the Clean Air Act, as amended (42 U.S.C. 7414))

[FR Doc. 80-37084 Filed 11-26-80; 8:45 am]
BILLING CODE 6560-26-M

Federal Register

Friday
November 28, 1980

Part IX

Department of the Interior

Bureau of Land Management

California Outer Continental Shelf; Tentative Sale No. 73; Call for Nominations of and Comments on Areas for Oil and Gas Leasing

UNITED STATES
DEPARTMENT OF THE INTERIOR

Bureau of Land Management

CALIFORNIA OUTER CONTINENTAL SHELF

TENTATIVE SALE NO. 73

CALL FOR NOMINATIONS OF AND COMMENTS ON AREAS FOR OIL AND GAS LEASING

PURPOSE OF CALL

Section 102 of the Outer Continental Shelf Lands Act Amendments of 1978 describes the purposes of that Act. One of the purposes is to establish policies and procedures intended to expedite exploration and development of the Outer Continental Shelf (OCS) in order to achieve national economic and energy policy goals, assure national security, reduce dependence on foreign sources, and maintain a favorable balance of payments in world trade. Equally important purposes include balancing energy resources development with the protection of the human, marine, and coastal environments, as well as assuring State and local governments the opportunity to review and comment on decisions relating to OCS activities. To assist the Secretary of the Interior in carrying out these purposes, and pursuant to 43 CFR 3313.1, nominations are hereby requested for areas on the California Outer Continental Shelf for possible oil and gas leasing under the Outer Continental Shelf Lands Act, as amended (43 U.S.C. 1331-1343). The Secretary is also requesting comments on the possible environmental impacts and potential use conflicts in specified areas.

DESCRIPTION OF THE AREA

The area offshore California extends from the U.S. Mexican border north to the approximate Oregon-California border.

1. Description of the outer limits of the Call area. Nominations will be considered for blocks seaward of the submerged lands of the adjacent State which are to be found on the Official Protraction Diagrams and Leasing Maps listed below, except as omitted by paragraph 2:

OCS LEASING MAPS/ OCS OFFICIAL PROTRACTION DIAGRAMS	LATEST APPROVAL, OR REVISION DATE	COST
1. NH 11-1, Bushnell Knoll	12/12/79	$2.00
2. NI 11-10, San Clemente	9/27/77	$2.00
3. 6A Channel Islands Area	7/24/67	$1.00
4. 6B "	7/24/67	$1.00
5. 6C "	4/25/77	$2.00
6. 6D "	8/8/66	$1.00
7. 6E "	8/8/66	$1.00

Except for blocks omitted by paragraph 2, nominations will also be considered within the mapped areas covered by diagrams 8-18 listed below. The areas may be described as follows: beginning at that point at which the Three Geographical Mile Line intersects the south boundary of block 467, found on OCS Official Protraction Diagram NI 10-6; thence west to the southwest corner of block 458; thence north to the northwest corner of block 370; thence west to the southwest corner of block 313; thence north to the northwest corner of block 974, found on OCS Official Protraction Diagram NJ 10-12; thence west to the southwest corner of block 959, found on OCS Official Protraction Diagram NJ 10-11; thence north to the northwest corner of block 299; thence west to the southwest corner of block 250; thence north to the northwest corner of block 118; thence west to the southwest corner of block 61; thence north to the northwest corner of block 325, found on OCS Official Protraction Diagram NJ 10-8; thence west to the southwest corner of block 270; thence north to the

northwest corner of block 402, found on OCS Official Protraction Diagram NJ 10-5; thence west to the southwest corner of block 385, found on OCS Official Protraction Diagram NJ 10-4; thence north to the northwest corner of block 77, found on OCS Official Protraction Diagram NJ 10-1; thence west to the southwest corner of block 22; thence north to the northwest corner of block 20, found on OCS Official Protraction Diagram NK 10-7; thence east to that point where the Three Geographical Mile Line intersects the north boundary of block 31; thence southward along the Three Geographical Mile Line to the point of beginning. The mapped areas so described are within the following protraction diagrams:

OCS OFFICIAL PROTRACTON DIAGRAMS	LATEST APPROVAL REVISION DATE	COST
8. NI 10-3, San Luis Obispo	3/26/76	$2.00
9. NI 10-6, Santa Maria	3/26/76	$2.00
10. NJ 10-1, Noyo Canyon	11/2/76	$2.00
11. NJ 10-2, Ukiah	11/2/76	$2.00
12. NJ 10-4, Navarro Canyon	11/2/76	$2.00
13. NJ 10-5, Santa Rosa	11/2/76	$2.00
14. NJ 10-8, San Francisco	11/2/76	$2.00
15. NJ 10-11, Santa Cruz	3/26/76	$2.00
16. NJ 10-12, Monterey Bay	3/26/76	$2.00
17. NK 10-7, Crescent City	11/5/76	$2.00
18. NK 10-10, Eureka	4/18/79	$2.00

Official Protraction Diagrams may be purchased from the Manager, Pacific OCS Office, Bureau of Land Management, 1340 West 6th Street, Room 200, Los Angeles, CA. 90017.

2. Blocks excluded from the Call for Nominations and Comments

Map No. 6A Channel Island Area

***39N	74W	46N	78W
***39N	75W	46N	82W
***39N	76W	46N	83W
***40N	72W	***46N	84W
***40N	73W	***47N	72W
***40N	74W	***47N	73W
40N	75W	***47N	74W
***40N	76W	***47N	75W
***40N	77W	***47N	76W
41N	72W	***47N	77W
41N	73W	47N	78W
41N	74W	47N	79W
41N	75W	47N	81W
41N	76W	47N	83W
***41N	77W	***47N	84W
***41N	78W	***48N	77W
42N	77W	***48N	78W
***42N	78W	48N	79W
***42N	79W	48N	80W
***42N	80W	48N	81W
43N	77W	48N	82W
43N	78W	48N	83W
43N	79W	***48N	84W
***43N	80W	***49N	78W
***43N	81W	***49N	79W
***43N	82W	***49N	80W
***43N	83W	***49N	81W
44N	80W	***49N	82W
44N	81W	***49N	83W
44N	82W	***49N	84W
***44N	83W		
45N	72W		
45N	76W		
45N	77W		
45N	82W		
***45N	83W		
***45N	84W		
46N	72W		
46N	73W		
46N	74W		
46N	75W		
46N	76W		
46N	77W		

*** That portion of the block within the Designated Channel Island Marine Sanctuary.

Map No. 6B Channel Island Area

***30N	52W	***41N	60W	44N	54W	
30N	53W	***41N	61W	44N	55W	
30N	54W	***41N	62W	***44N	58W	
30N	55W	***41N	63W	44N	59W	
***30N	56W	***41N	64W	***45N	58W	
***30N	57W	***41N	65W	45N	59W	
***31N	52W	***41N	66W	45N	60W	
31N	53W	***41N	67W	45N	61W	
31N	55W	***41N	68W	45N	62W	
31N	56W	41N	69W	45N	63W	
***31N	57W	***41N	70W	45N	65W	
***32N	52W	***41N	71W	45N	66W	
32N	53W	42N	44W	***46N	58W	
32N	55W	42N	45W	***46N	59W	
32N	56W	42N	46W	***46N	60W	
***32N	57W	42N	47W	***46N	61W	
***33N	52W	42N	48W	***46N	62W	
33N	53W	42N	49W	46N	63W	
33N	54W	42N	50W	46N	64W	
33N	55W	42N	51W	46N	65W	
***33N	56W	42N	52W	46N	66W	
***33N	57W	***42N	58W	46N	67W	
***34N	53W	***42N	59W	46N	68W	
***34N	54W	***42N	60W	46N	69W	
***34N	55W	42N	61W	46N	71W	
***34N	56W	***42N	62W	***47N	62W	
		***42N	63W	***47N	63W	
		42N	64W	***47N	64W	
		42N	65W	***47N	65W	
		42N	66W	***47N	66W	
		42N	67W	***47N	67W	
39N	43W	42N	68W	***47N	68W	
39N	44W	42N	69W	47N	69W	
39N	45W	42N	70W	47N	70W	
39N	46W	42N	71W	***47N	71W	
40N	43W	43N	44W	***48N	68W	
40N	44W	43N	45W	***48N	69W	
40N	45W	43N	46W	***48N	70W	
40N	46W	43N	47W	***48N	71W	
40N	47W	43N	48W	51N	65W (NW1/4NW1/4)	
40N	48W	43N	50W	51N	66W (N1/2)	
***40N	67W	43N	51W	51N	67W (N1/2)	
***40N	68W	43N	52W	51N	68W (N1/2N1/2)	
***40N	69W	43N	53W	52N	64W	
***40N	70W	43N	54W	52N	65W	
***40N	71W	43N	55W	52N	66W	
41N	43W	***43N	58W	52N	67W	
41N	44W	43N	59W	52N	68W	
41N	45W	43N	60W	52N	69W	
41N	46W	43N	61W			
41N	47W	43N	62W			
41N	48W	43N	63W			
41N	49W	44N	53W			

*** That portion of block within the Designated Channel Islands Marine Sanctuary.

Map No. 6C Channel Islands Area

9N	19W	16N	25W	23N	28W
9N	20W	16N	26W	24N	23W
10N	19W	16N	27W	24N	24W
10N	20W	16N	28W	24N	25W
10N	21W	17N	21W	24N	26W
10N	22W	17N	22W	24N	27W
10N	23W	17N	23W	24N	28W
10N	24W	17N	24W	25N	24W
10N	25W	17N	25W	25N	25W
11N	19W	17N	26W	25N	26W
11N	20W	17N	27W	25N	27W
11N	21W	17N	28W	25N	28W
11N	22W	18N	21W	26N	25W
11N	23w	18N	22W	26N	26W
11N	24W	18N	23W	26N	27W
11N	25W	18N	24W	26N	28W
11N	26W	18N	25W	27N	26W
11N	27W	18N	26W	27N	27W
11N	28W	18N	27W	27N	28W
12N	21W	18N	28W	27N	29W
12N	22W	19N	21W	27N	30W
12N	23W	19N	22W	28N	27W
12N	24W	19N	23W	28N	28W
12N	25W	19N	24W	28N	29W
12N	26W	19N	25W	28N	30W
12N	27W	19N	26W	29N	28W
12N	28W	19N	27W	29N	29W
13N	21W	19N	28W	29N	30W
13N	22W	20N	22W	30N	29W
13N	23W	20N	23W	30N	30W
13N	24W	20N	24W		
13N	25W	20N	25W		
13N	26W	20N	26W		
13N	27W	20N	27W		
13N	28W	20N	28W		
14N	21W	21N	22W		
14N	22W	21N	23W		
14N	23W	21N	24W		
14N	24W	21N	25W		
14N	25W	21N	26W		
14N	26W	21N	27W		
14N	27W	21N	28W		
14N	28W	22N	22W		
15N	21W	22N	23W		
15N	22W	22N	24W		
15N	23W	22N	25W		
15N	24W	22N	26W		
15N	25W	22N	27W		
15N	26W	22N	28W		
15N	27W	23N	23W		
15N	28W	23N	24W		
16N	22W	23N	25W		
16N	23W	23N	26W		
16N	24W	23N	27W		

*** That portion of the block within the Designated Channel Islands Marine Sanctuary.

Map No. 6D Channel Island Area

***29N	53W
***29N	54W
***29N	55W
***29N	56W

NJ 10-1 NOYO CANYON

608
652
696
740

NJ 10-2 UKIAH

573
574
617
618
661
662
705
706
749
750
793
794
795
796
837
838
839
840
882
883
884
927
928
971
972
973

NJ 10-5 SANTA ROSA

588*
589
631*
632*
633
673
674
675*
676
677
717
718
719*
720

NJ 10-5 (CONT.)

721
722
761
762
763*
764
765
766
767
805
806
807*
808
809
810
811
851*
852
853
854
855
894*
895*
896
897
898
899
938*
939
940
941
942
943
982*
983
984
985
986

NJ 10-8 SAN FRANCISCO

14*
15
16
17
18
19
21
22
58*

NJ 10-8 (CONT.)

59
60
61
62
63
64
65
66
67
103*
104
105
106
107
108
109
110
111
112
147*
148*
149
150
151
152
153
154
155
156
157
158
192*
193*
194
195
196
197
198
199
200
201
202
203
239
240*
241*
242*
243
244
245

NJ 10-8 (CONT.)

246
247*
286*
287*
288*
289*
290*
291*
376
377
378
379
420
421
422
423
464
465
466
467
508
509
510
511
552
553
554
555
596
597
598
599
641
642
643
685
686
687
688
729
730
731
732
773
774
775
776
817
818
819
820

NJ 10-8 (CONT.)

821
861
862
863
864
865
906
907
908
909
951
952
953
954
955
956
996
997
998
999**
1000
1001

NK 10-10 EUREKA

27
28
29
30
71
72
73
74
115
116
117
118
119
159
160
161
162
163
203
204
205
206
207
248
249
250

NK 10-10 (CONT.)

251
293
294
295

NJ 10-11 SANTA CRUZ

32**
33
34
76**
77**
78
79
80
122**
123**
124
125
167**
168**
169
212**
213
256**
257
258
300**
301**
302
345**
346
388**
389**
390
432**
433
476**
477**
478
521**
522
565**
566
609**
610
654**
698**

NJ 10-12 MONTEREY BAY

573
617
661

* That portion of the block within 15 statute miles of the boundaries of the Pt. Reyes Wilderness as depicted on a map entitled "Wilderness Plan, Point Reyes National Seashore," numbered 612-90.000-B and dated September 1976.

*That portion of the block within 15 statute miles of the boundaries of the Pt. Reyes Wilderness as depicted on a map entitled "Wilderness Plan, Point Reyes National Seashore", numbered 612-90.000-B and dated September 1976.

** That portion of the block within 3 miles of the Three Geographical Mile Line.

INSTRUCTIONS ON CALL

Nominations must be described by referring to the OCS Official Protraction Diagrams and/or OCS Leasing Maps prepared by the Bureau of Land Management, Department of the Interior and referred to above. Only blocks as described above may be nominated.

Those nominating twelve blocks or more are requested to arrange their nominations into three groups according to the priority of their interest.

In addition to nominations, we are seeking comments about particular geological, environmental, biological, archaeological, socioeconomic conditions or problems, or other information which might bear upon potential leasing and development of particular blocks.

Comments should be as specific as possible in identifying individual blocks or areas which should receive special concern and analysis.

Nominations and comments must be submitted not later than January 30, 1981, in envelopes labeled, "Nominations of Tracts for Leasing in the California Outer Continental Shelf" or "Comments on Leasing in the California Outer Continental Shelf," as appropriate. They must be submitted to the Manager, Pacific Outer Continental Shelf Office, Bureau of Land Management, at the address cited above. Copies should be sent to the Director, Attention 541, Bureau of Land Management, Department of the Interior, Washington, D.C. 20240 and to the Conservation Manager, Pacific Region, U.S. Geological Survey, 1340 West Sixth Street, Room 100, Los Angeles, CA 90017 and to the Director, U.S. Geological Survey, National Center, Mail Stop 101, 12201 Sunrise Valley Drive, Reston, Virginia 22092.

USE OF INFORMATION FROM CALL

Nominations will be evaluated and used along with geological and geophysical information to determine what, if any, blocks should be tentatively selected for further environmental analysis pursuant to the National Environmental Policy Act of 1969 (42 U.S.C. 4321-4347) and the OCS Lands Act, as amended. Generally, because of limits on the geographical scope of areas which can be successfully planned for a single sale, only a portion of the blocks nominated are selected for further environmental analysis and possible leasing.

Comments will be considered along with other relevant information available to the Secretary to determine what blocks should be designated for further environmental analysis and study. A general rule, blocks which are believed to have potential for the production of hydrocarbons are not excluded from further environmental study unless the Secretary has sufficient information to conclude that it is not possible for those blocks to be developed in an environmentally safe manner.

In any event, selection of blocks for further environmental analysis does not insure that the blocks will be subsequently offered for lease or that they will be deleted for environmental or use conflicts. It simply insures that more information will be available when the decision is made. In performing additional environmental analyses leading to a sale decision, the Department will take into account comments received as it determines particular areas and issues for attention.

Final selection of blocks for competitive bidding will be made only at a later date after compliance with established Departmental procedures and all requirements of the National Environmental Policy Act of 1969. Notice of any blocks finally selected for competitive bidding will be published in the Federal Register stating the conditions and terms for leasing and the place, date, and hour at which bids will be received and opened.

Ed Hunter
Director, Bureau of Land Management
Associate

Approved: NOV 25 1980

LARRY E. MEIEROTTO
Secretary of the Interior
Assistant

[FR Doc. 80-37135 Filed 11-26-80; 8:45 am]
BILLING CODE 4310-84-C

Reader Aids

Federal Register

Vol. 45, No. 231

Friday, November 28, 1980

INFORMATION AND ASSISTANCE

PUBLICATIONS

Code of Federal Regulations

CFR Unit	202-523-3419 523-3517
General information, index, and finding aids	523-5227
Incorporation by reference	523-4534
Printing schedules and pricing information	523-3419

Federal Register

Corrections	523-5237
Daily Issue Unit	523-5237
General information, index, and finding aids	523-5227
Public Inspection Desk	633-6930
Scheduling of documents	523-3187

Laws

Indexes	523-5232
Law numbers and dates	523-5282 523-5266
Slip law orders (GPO)	275-3030

Presidential Documents

Executive orders and proclamations	523-5233
Public Papers of the President	523-5235
Weekly Compilation of Presidential Documents	523-5235

Privacy Act Compilation	523-3517
United States Government Manual	523-5230

SERVICES

Agency services	523-3408
Automation	523-3408
Dial-a-Reg	
Chicago, Ill.	312-663-0884
Los Angeles, Calif.	213-688-6694
Washington, D.C.	202-523-5022
Magnetic tapes of FR issues and CFR volumes (GPO)	275-2867
Public briefings: "The Federal Register—What It Is and How To Use It"	523-5235
Public Inspection Desk	633-6930
Regulations Writing Seminar	523-5240
Special Projects	523-4534
Subscription orders and problems (GPO)	783-3238
TTY for the deaf	523-5239

FEDERAL REGISTER PAGES AND DATES, NOVEMBER

72617-72994 3
72995-73464 4
73465-73628 5
73629-73894 6
73895-74462 7
74463-74692 10
74693-74894 12
74895-75158 13
75159-75632 14
75633-76084 17
76085-76428 18
76429-76640 19
76641-76936 20
76937-77410 21
77411-78116 24
78117-78614 25
78615-78994 26
78995-79406 28

CFR PARTS AFFECTED DURING NOVEMBER

At the end of each month, the Office of the Federal Register publishes separately a list of CFR Sections Affected (LSA), which lists parts and sections affected by documents published since the revision date of each title.

3 CFR

Administrative Orders:
Notice of November 12, 1980 75159

Executive Orders:
11764 (Revoked by EO 12250) 72995
11914 (Revoked by EO 12250) 72995
12170 (See Notice of November 12, 1980) 75159
12246 (Revoked by EO 12251) 76085
12250 72995
12251 76085
12252 78615
12253 78995

Proclamations:
4801 72617
4802 75161
4803 75633
4804 75635
4805 78617
4806 78997

5 CFR

294 78999
550 72999
591 76087
737 75500
831 76087
890 76087
900 75568

Proposed Rules:
831 75217
870 79078
890 79078
930 76183

6 CFR

705 ..... 72619, 76641
706 76641

7 CFR

210 76937
220 76937
246 74854
272 ..... 72999, 77258, 78999
273 ..... 72999, 78999
276 77258
371 73465
404 74463
408 78117
418 ..... 74895, 78117
419 ..... 74896, 78117
430 ..... 74899, 78117
438 78118
439 ..... 73629, 78118
713 76938
718 76939
722 79001
726 73895
730 76941
904 76942
905 ..... 74463, 76650, 79002
906 73895
907 ..... 75163, 76651, 79003
910 ..... 73897, 75164, 76942, 79004
911 76429
915 76429
927 74464
930 78619
931 74464
944 73895
959 76943
966 78619
971 ..... 73897, 79004
982 ..... 73634, 76430
989 75164
991 79006
999 ..... 73634, 76430
1124 73635
1250 75165
1280 76638
1421 ..... 73636, 75637, 76430
1430 73009
1434 79007
1464 79008
1493 78622
1701 ..... 74465, 76943
1823 73636
1901 73636
1942 73636
1980 ..... 73646, 76089
2851 76944
2853 76965

Proposed Rules:
Ch. I-VII 75454
Ch. IX-XII 75454
Ch. XIV-XVIII 75454
Ch. XXI 75454
Ch. XXIV-XXIX 75454
Ch. XXVIII 77037
28 75218
45 74491
225 74384
271 74725
278 74725
282 75218
724 75219
726 ..... 77035, 79078
971 73498
984 77448
989 75220
993 77448
1001 75956
1002 75956
1004 75956
1006 75956
1007 75956
1011 75956
1012 75956
1013 75956
1030 75956
1032 75956

1033....75956
1036....75956
1040....75956
1044....75956
1046....75956
1049....75956
1050....75956
1062....75956
1064....75956
1065....75956
1068....75956
1071....75956
1073....75956
1075....75956
1076....75956
1079....75956
1093....75956
1094....75956
1096....75956
1097....75956
1098....75956
1099....75956
1102....75956
1104....75956
1106....75956
1108....75956
1120....75956
1124....75956
1125....75956
1126....75956
1131....75956
1132....75956
1133....74726, 75956
1134....75956
1135....75956
1136....75956
1137....75956
1138....75956
1139....75956
1701....78157
1902....76440
1942....77036
2852....77038

8 CFR

103....72625
204....75166, 76652
238....74465, 76430

9 CFR

82....72626, 73648, 75168, 76965, 78622, 78623
320....76965

Proposed Rules:

Ch. I-IV....75454
92....76689
95....78699
113....73079
318....73947
381....73947

10 CFR

Ch. II....74422
2....73465, 74693
11....76968
50....76602, 76968
51....74693
70....73012, 74693, 76968
72....74693, 78623
73....74693
75....73012
150....74693
205....76038
210....74672
211....74672, 78588
212....72616, 74432, 78588
221....76431
456....74712
781....73446

Proposed Rules:

Ch. I....76446, 78700
Ch. II....72886
Ch. III....72886
Ch. X....72886
31....78700
50....73080, 75536, 77450
51....74492
170....74493
211....76214
212....74494
430....79078
457....78700
474....73684, 78701
500....73499
503....73499
504....73499
505....73499
506....73499
1530....73081
745....78600

12 CFR

201....78624
204....73013
211....76094
217....72630, 73016
336....77411
525....76095
526....72631, 76103
541....76095, 76104
545....76095, 76103, 76104
561....76104, 76111
563....73466, 76095, 76103, 76104, 76111, 76652
569a....76652
612....73648
701....75169
741....78624
742....73016
761....75169

Proposed Rules:

Ch. VI....72675
11....75669
225....75221
545....72675
546....72681
561....72681
563c....72681
571....72681
701....75224, 79079

13 CFR

107....73017
108....73020
305....74900
309....74900, 74902
315....74902

Proposed Rules:

Ch. III....75225, 78918
Ch. V....75225, 78918

14 CFR

21....79009
39....74466-74468, 75637, 75638, 76653, 77413-77416 79010-79013
71....74468, 76654, 76658, 77417-77418, 79013
73....79014
91....79302
93....72637, 73652
97....72643, 76658, 79014
204....73020
323....73020
384....76973
385....76973
1214....73022

Proposed Rules:

Ch. I....73688, 76691
Ch. II....79080
21....76868
23....76872
25....76872
27....76872
29....76872
33....76872
39....74495, 76691, 77450
43....76894
71....74497, 74932, 75684, 76692, 76694, 77451, 77452, 79088
73....76694
91....75098, 76894
121....75138
204....73085
291....73085
298....73086, 73087
300....73092
1214....74499

15 CFR

4....79016
385....76435
399....76435
931....78118
970....76661

Proposed Rules:

Ch. I-III....75225
Ch. I....78918
Ch. II....78918
Ch. III....78918
Ch. IV....78918
Ch. VIII....75225
Ch. IX....78918
Ch. XII....75225, 78918
970....79089
1001....77038

16 CFR

1....78626
13....74469, 74712-74714, 74903, 75179, 75181, 77419
1615....73884
1616....73884
1700....78630

Proposed Rules:

13....74502
456....72683
1031....76447
1032....76447
1145....75685
1406....76018

17 CFR

200....74905, 76974
210....76974
229....76974, 76982
231....72644
239....73898, 75182, 76974
240....73906, 76974, 76982, 79018
249....73906, 76974
250....79022
270....73898, 73915
274....73898

Proposed Rules:

Ch. I....77043
5....73499-73504
229....78157
230....72685
231....76695
239....78157, 78158
240....74505
241....76695
249....74505, 78158
250....73509
251....76695
274....78158

18 CFR

4....76115, 77420
141....74715
260....75192
270....73027
271....73027, 76664, 76671, 76675, 76676, 77421
273....77421
274....77421
282....73033, 76681
375....76115, 79024
711....73033
713....73033
714....73034
716....73033
725....76682

Proposed Rules:

125....76696
225....76696
260....77043
271....72687, 76700, 78701-78703
282....74505
292....74934
726....76701

19 CFR

6....72646
10....75639
19....75639
113....75639
144....75639
153....75639
159....75639
174....75639
175....75639
177....75639
355....74469, 78118, 79025

Proposed Rules:

Ch. III....78918
148....78704
151....76449

20 CFR

401....74906
404....78633
416....72647

Proposed Rules:

208....78704
210....78704
216....78704
217....78704
219....78704
221....78704
230....78704
232....78704
237....78704
238....78704
341....74510
404....75225, 78726
416....75225, 75226, 78726

21 CFR

14 ... 79025
173 ... 79922
175 ... 76997, 76998
178 ... 76999
193 ... 75643
203 ... 78514
430 ... 75194
431 ... 75194
436 ... 75194
444 ... 73034
450 ... 75194
510 ... 79027
520 ... 75199, 78118
558 ... 76999, 79027
601 ... 73922
1030 ... 79028
1312 ... 74715

Proposed Rules:

16 ... 74158
20 ... 74158, 76183
70 ... 77043
81 ... 75226
161 ... 73092-73095
193 ... 73955
211 ... 79089
310 ... 73955
436 ... 78162
452 ... 79091
610 ... 75229
640 ... 79092
700 ... 73960
710 ... 73960
720 ... 73960
730 ... 73960
801 ... 79093
803 ... 76183
890 ... 75230
899 ... 74158, 79093
1040 ... 74374

22 CFR

Proposed Rules:

11 ... 73100
51 ... 78163
181 ... 75643

23 CFR

635 ... 75643

Proposed Rules:

480 ... 76705
625 ... 74940, 75690
635 ... 77455
645 ... 76924
652 ... 74940
663 ... 74940

24 CFR

Ch. II ... 77368
201 ... 73923
203 ... 76376
220 ... 76376
221 ... 76376
226 ... 76376
227 ... 76376
234 ... 76376
240 ... 76376
570 ... 73610
888 ... 76052
889 ... 74919
3610 ... 75610

Proposed Rules:

51 ... 76710
144 ... 78508
146 ... 73454
200 ... 72688, 73512, 76450
203 ... 72690
204 ... 78164
207 ... 76710
213 ... 76710
220 ... 72690
221 ... 72690, 76710
222 ... 72690
226 ... 72690
227 ... 72690
232 ... 76710
234 ... 72690
240 ... 72690
241 ... 76710
242 ... 76710, 78166
570 ... 72691, 73512, 73962, 74940
808 ... 73264
882 ... 72697
888 ... 73264

25 CFR

31g ... 75199
258 ... 74688, 79031

Proposed Rules:

103a ... 72699
103b ... 72699
281 ... 79094
700 ... 76710

26 CFR

1 ... 72649, 74716, 74721, 75200, 75644, 75647, 76128, 78633
3 ... 72649
4 ... 75647
5b ... 76128
11 ... 75200
23 ... 73467
31 ... 72651
48 ... 72653
53 ... 72649
150 ... 73467, 75206, 78119
301 ... 72651

Proposed Rules:

1 ... 75692-75695, 76450, 78167, 79094
4 ... 75695
51 ... 73512, 75231
53 ... 78167
301 ... 75709

27 CFR

6 ... 74919

Proposed Rules:

4 ... 72702, 74942
6 ... 73692
9 ... 73694
181 ... 76191

28 CFR

0 ... 76684
50 ... 76436
523 ... 75124
540 ... 75125
544 ... 75124, 75126
548 ... 75126
551 ... 75127
552 ... 75127
570 ... 75127

Proposed Rules:

40 ... 79095

29 CFR

1601 ... 73035
1604 ... 74676
1926 ... 75618
1952 ... 77000, 77001
1960 ... 77003
2601 ... 75206
2610 ... 75209, 75210, 75658

Proposed Rules:

2 ... 77047
402 ... 75231
403 ... 75231
1903 ... 75232
1910 ... 75238
1952 ... 77048
1977 ... 75232
2520 ... 74512, 74513, 74727, 74728
2530 ... 74512, 74513, 74727, 74728

30 CFR

250 ... 74471
715 ... 73945
783 ... 76932
816 ... 73945, 76932
817 ... 73945, 76932
890 ... 74680
904 ... 77003
925 ... 77017
943 ... 78635
950 ... 78637

Proposed Rules:

Ch. VII ... 74513
100 ... 74444
884 ... 73512, 74943
914 ... 78482
938 ... 74943
948 ... 73512
950 ... 74728

31 CFR

Proposed Rules:

10 ... 73962

32 CFR

518 ... 73471
552 ... 73037
657 ... 73473
706 ... 76684
828 ... 73653
1900 ... 74919

Proposed Rules:

505 ... 73103
701 ... 76713

32A CFR

Proposed Rules:

Ch. I ... 78918
505 ... 78727

33 CFR

110 ... 79031
117 ... 73653, 75659, 77431-77433
150 ... 77434
161 ... 74471
207 ... 76144

Proposed Rules:

66 ... 73695
110 ... 79103
117 ... 77458, 79101, 79102

34 CFR

Subtitle A ... 77368
Subtitle B ... 77368
662 ... 79032
764 ... 79035

Proposed Rules:

Subtitle A ... 75564
510 ... 78962
735 ... 73514
805 ... 73963

36 CFR

7 ... 78119
1150 ... 78472

Proposed Rules:

Ch. II ... 75454
7 ... 73518, 77049

37 CFR

Proposed Rules:

Ch. I ... 75225, 78918
1 ... 73657, 73965, 78172
5 ... 72653
201 ... 79036

38 CFR

3 ... 72654
21 ... 73479
36 ... 77028

Proposed Rules:

1 ... 77050
21 ... 77050

39 CFR

10 ... 72655
111 ... 73925
224 ... 74921
310 ... 77028
601 ... 73926

Proposed Rules:

10 ... 73103
111 ... 73518, 75710, 79104

40 CFR

35 ... 73868
52 ... 74472-74480, 75212, 75660, 76685, 76688, 78121, 78684, 79051, 79052
55 ... 73929
60 ... 74846, 75662
65 ... 73044
81 ... 73046, 73930, 78122
85 ... 78448
86 ... 78123
120 ... 79053
122 ... 74489, 74921, 76074, 76626, 76630
123 ... 76144
124 ... 74921
180 ... 75662, 75663, 76145, 76146, 77029, 77030, 78686, 78687, 79068
228 ... 77434
257 ... 76147
260 ... 76074, 76626
261 ... 74884, 76618, 76620, 77435, 78524-78540
262 ... 76620, 76624, 78524
264 ... 76074, 76626
265 ... 76074, 76626, 78524

Proposed Rules:

Ch. I ... 75488
7 ... 77459
35 ... 72984
51 ... 73696
52 ... 74515-74520, 74737, 74944, 76496, 76714, 77052-77054, 77075, 77459, 77464, 77465, 78730-78734, 79116

55 ... 73699, 75710
60 ... 73521, 76404, 76427, 77075, 78174, 78980, 79390
61 ... 76346
81 ... 73702, 76209
86 ... 79116, 79382
122 ... 76076
123 ... 74520, 74737, 74945, 75240, 75241, 76210, 76715, 79117, 79118
162 ... 73523, 77077
163 ... 72708, 72948
164 ... 73523
172 ... 72948
180 ... 72708, 76211, 77077–77079, 79119
228 ... 75241
249 ... 76906
256 ... 73440, 76497
257 ... 72709
260 ... 76076
261 ... 74893, 77466
264 ... 76076
265 ... 76076
266 ... 76076
403 ... 72883
423 ... 72713
720 ... 74378, 74945
721 ... 78970
772 ... 77332, 77353

41 CFR

Ch. 4 ... 75454
Ch. 101 ... 73050, 77436
3–1 ... 74921
3–3 ... 73049
5–11 ... 76438
5A–11 ... 76438
7–1 ... 74923
7–4 ... 74923
7–6 ... 74923
Ch. 18 ... 78125
24–1 ... 73657
101–11 ... 74924
101–37 ... 73049
Proposed Rules:
Ch. 3 ... 73523
Ch. 25 ... 76716
Ch. 101 ... 79120
Ch. 105 ... 79120
51–4 ... 77080
51–5 ... 77080
101–6 ... 73977
101–20 ... 72713
105–60 ... 72714

42 CFR

5 ... 75996
57 ... 73051
58 ... 73658–73664
74 ... 76148
110 ... 77031
401 ... 74906
405 ... 73930, 73931, 74826, 75243
Proposed Rules:
Ch. I ... 78735
36 ... 76497
53 ... 76212
57 ... 76212
74 ... 73978, 74174
121 ... 78552
405 ... 73978, 74174
447 ... 73978

43 CFR

4 ... 75212
3300 ... 77437
3610 ... 77438
3800 ... 78902
Public Land Orders:
850 Revoked by PLO 5776) ... 79069
5186 (Amended by PLO 5776) ... 79069
5187 (Amended by PLO 5776) ... 79069
5759 ... 79069
5756 (Corrected by PLO 5770) ... 74485
5762 (Corrected by PLO 5772) ... 75214
5768 ... 73668
5769 ... 73480
5770 ... 74485
5771 ... 75214
5772 ... 75214
5773 ... 75214
5774 ... 74722
5775 ... 75664, 78134
5776 ... 79069
5777 ... 78688

44 CFR

2 ... 74926
9 ... 79069
64 ... 72658–72661, 74926, 77031
67 ... 73668–73681, 79070
76 ... 79071
302 ... 74927
Proposed Rules:
9 ... 79122
59 ... 78181
60 ... 78181
61 ... 78181
62 ... 78181
64 ... 78181
67 ... 73703, 73704, 77081, 77091, 77092

45 CFR

Ch. I ... 77368
Ch. XIII ... 77368
Ch. XIV ... 77368
Ch. XV ... 77368
76 ... 77439
306 ... 74485
1061 ... 73054, 73890, 74928
1075 ... 74928
1391 ... 73059
Proposed Rules:
Ch. VI ... 76716
Ch. X ... 73709
121q ... 77032
205 ... 75243
1223 ... 74521

46 CFR

4 ... 77439
26 ... 77439
35 ... 77439
78 ... 77439
97 ... 77439
109 ... 77439
167 ... 77439
185 ... 77439
196 ... 77439
276 ... 77445
500 ... 78688
524 ... 79074
Proposed Rules:
Ch. II ... 75225, 78918
Ch. III ... 78918
10 ... 73616, 79258
30 ... 75712
35 ... 75712
93 ... 74523
157 ... 73616
505 ... 74931
530 ... 75244
540 ... 74931

47 CFR

2 ... 78689, 78696
73 ... 78696, 78697
74 ... 78689
78 ... 78689
61 ... 76148
63 ... 76148
73 ... 72662, 73059, 74946 78134–78136
76 ... 76178
81 ... 76179
Proposed Rules:
Ch. I ... 72719, 76498, 78188
1 ... 72902, 78736
2 ... 72723, 73979
21 ... 72723
22 ... 73979
63 ... 74523
67 ... 76213
73 ... 72902, 73618–73720, 73980, 76717, 78188–78191, 78735–78738
74 ... 72723
90 ... 73979, 77093
94 ... 72723

49 CFR

3 ... 75666
171 ... 74640
172 ... 74640
173 ... 74640
174 ... 74640
175 ... 74640
176 ... 74640
177 ... 74640
225 ... 72664
391 ... 77466
392 ... 77466
571 ... 79122
1011 ... 73076
1014 ... 78140
1031A ... 72665
1033 ... 73076, 74486, 74723, 75215, 78140
1039 ... 73481, 79123
1040 ... 75667
1090 ... 79123
1100 ... 73683
1109 ... 73077
1111 ... 74488, 77032
1121 ... 78141
1300 ... 73481, 75667, 79123
1303 ... 75667
1306 ... 75667
1308 ... 75667
1310 ... 75667
Proposed Rules:
Ch. X ... 73105, 73524
1003 ... 76718
1005 ... 76718
1042 ... 75717
1056 ... 76718
1057 ... 73981
1109 ... 73105, 73106
1116 ... 76602
1128 ... 73106
1201 ... 76718, 78191
1241 ... 76718, 78191
1310 ... 76718
1322 ... 76718

50 CFR

13 ... 78153
17 ... 74880, 78153
32 ... 79075
33 ... 79076
216 ... 73486, 75215
258 ... 72667
611 ... 77445
656 ... 77445
671 ... 72667, 73077
672 ... 73486
Proposed Rules:
Ch. II ... 75225, 78918
Ch. IV ... 78918
Ch. VI ... 75225, 78918
17 ... 76012
23 ... 73876
285 ... 78738
611 ... 74178, 74524, 74948, 77489, 79126
642 ... 74950
652 ... 79126
653 ... 73528
656 ... 77489
658 ... 74178, 79126
674 ... 74951
675 ... 74524
681 ... 74951

AGENCY PUBLICATION ON ASSIGNED DAYS OF THE WEEK

The following agencies have agreed to publish all documents on two assigned days of the week (Monday/Thursday or Tuesday/Friday)

This is a voluntary program (See OFR NOTICE FR 32914, August 6 1976)

Monday	Tuesday	Wednesday	Thursday	Friday
DOT/SECRETARY	USDA/ASCS		DOT/SECRETARY	USDA/ASCS
DOT/COAST GUARD	USDA/FNS		DOT/COAST GUARD	USDA/FNS
DOT/FAA	USDA/FSQS		DOT/FAA	USDA/FSQS
DOT/FHWA	USDA/REA		DOT/FHWA	USDA/REA
DOT/FRA	MSPB/OPM		DOT/FRA	MSPB/OPM
DOT/NHTSA	LABOR		DOT/NHTSA	LABOR
DOT/RSPA	HHS/FDA		DOT/RSPA	HHS/FDA
DOT/SLSDC			DOT/SLSDC	
DOT/UMTA			DOT/UMTA	
CSA			CSA	

Documents normally scheduled for publication on a day that will be a Federal holiday will be published the next work day following the holiday. Comments on this program are still invited.
Comments should be submitted to the Day-of-the-Week Program Coordinator, Office of the Federal Register, National Archives and Records Service, General Services Administration, Washington, D.C. 20408

NOTE: As of September 2, 1980, documents from the Animal and Plant Health Inspection Service, Department of Agriculture, will no longer be assigned to the Tuesday/Friday publication schedule.

REMINDERS

The "reminders" below identify documents that appeared in issues of the **Federal Register** 15 days or more ago. Inclusion or exclusion from this list has no legal significance.

Rules Going Into Effect Today

COMMERCE DEPARTMENT

National Oceanic and Atmospheric Administration

72178 10-31-80 / Provisions for taking of marine mammals incidental to commercial fishing operations

HEALTH AND HUMAN SERVICES

Food and Drug Administration

71354 10-28-80 / Exemption of dermatologic and vaginal antibiotic drug products from certification

INTERIOR DEPARTMENT

Heritage Conservation and Recreation Service—

71714 10-29-80 / Urban park and recreation recovery program

List of Public Laws

Last Current Listing October 24, 1980

Last Cumulative Listing November 5, 1980

This is a continuing listing of public bills from the current session of Congress which have become Federal laws. The text of laws is not published in the **Federal Register** but may be ordered in individual pamphlet form (referred to as "slip laws") from the Superintendent of Documents, U.S. Government Printing Office, Washington, D.C. 20402 (telephone 202-275-3030).

H.R. 7212 / Pub. L. 96-484 To ratify a settlement agreement in a land dispute between the Pamunkey Indian Tribe and the Southern Railway Company, and for other purposes (November 24, 1980; 94 Stat. 2365) Price: $1