10-18-83
Vol. 48 No. 202
Pages 48215-48438

Federal Register

Tuesday
October 18, 1983

Selected Subjects

Administrative Practices and Procedure
Immigration and Naturalization Service

Air Pollution Control
Environmental Protection Agency

Airspace
Federal Aviation Administration

Animal Drugs
Food and Drug Administration

Aviation Safety
Federal Aviation Administration

Communications Common Carriers
Federal Communications Commission

Flood Insurance
Federal Emergency Management Agency

Government Employees
Employment Standards Administration
Postal Service

Governmental Property Management
General Services Administration

Marketing Agreements
Agricultural Marketing Service

Meat Inspection
Food Safety and Inspection Service

Motor Vehicle Safety
National Highway Traffic Safety Administration

CONTINUED INSIDE

FEDERAL REGISTER Published daily, Monday through Friday, (not published on Saturdays, Sundays, or on official holidays), by the Office of the Federal Register, National Archives and Records Service, General Services Administration, Washington, D.C. 20408, under the Federal Register Act (49 Stat. 500, as amended; 44 U.S.C. Ch. 15) and the regulations of the Administrative Committee of the Federal Register (1 CFR Ch. I). Distribution is made only by the Superintendent of Documents, U.S. Government Printing Office, Washington, D.C. 20402.

The **Federal Register** provides a uniform system for making available to the public regulations and legal notices issued by Federal agencies. These include Presidential proclamations and Executive Orders and Federal agency documents having general applicability and legal effect, documents required to be published by Act of Congress and other Federal agency documents of public interest. Documents are on file for public inspection in the Office of the Federal Register the day before they are published, unless earlier filing is requested by the issuing agency.

The **Federal Register** will be furnished by mail to subscribers for $300.00 per year, or $150.00 for six months, payable in advance. The charge for individual copies is $1.50 for each issue, or $1.50 for each group of pages as actually bound. Remit check or money order, made payable to the Superintendent of Documents, U.S. Government Printing Office, Washington D.C. 20402.

There are no restrictions on the republication of material appearing in the **Federal Register.**

Questions and requests for specific information may be directed to the telephone numbers listed under INFORMATION AND ASSISTANCE in the READER AIDS section of this issue.

Selected Subjects

National Parks
National Park Service

Natural Gas
Federal Energy Regulatory Commission

Navigation (Water)
Coast Guard

Public Lands—Grants
Land Management Bureau

Radio Broadcasting
Federal Communications Commission

Reporting and Recordkeeping Requirements
Securities and Exchange Commission

Surface Mining
Surface Mining Reclamation and Enforcement Office

Contents

Federal Register
Vol. 48, No. 202
Tuesday, October 18, 1983

The President
EXECUTIVE ORDERS
48215 Export control regulations, continuation (EO 12444)
PROCLAMATIONS
48217 World Food Day (Proc. 5118)

Executive Agencies

ACTION
NOTICES
Senior Executive Service:
48266 Bonus awards schedule
48266 Performance Review Board; membership

Administrative Conference of United States
NOTICES
Meetings:
48266 Adjudication Committee

Agricultural Marketing Service
RULES
48219 Hops of domestic production; waiver

Agriculture Department
See also Agricultural Marketing Service; Food Safety and Inspection Service.
NOTICES
48266 Sugar, imported; de minimis amount for certificates of eligibility exemption

Air Force Department
NOTICES
Meetings:
48276 Scientific Advisory Board

Arts and Humanities, National Foundation
NOTICES
48304 Intergovernmental review of agency programs and activities; National Endowment for Arts; clarification
Meetings:
48303 Arts and Artifacts Indemnity Advisory Panel
48303 Arts National Council

Blind and Other Severely Handicapped, Committee for Purchase from
NOTICES
48416 Procurement list, 1984; establishment

Civil Rights Commission
NOTICES
Meetings; State advisory committees:
48267 New Mexico

Coast Guard
RULES
Ports and waterways safety:
48230 Barges; towing hawser length requirements

Commerce Department
See also International Trade Administration; National Bureau of Standards; National Oceanic and Atmospheric Administration; National Technical Information Service.
NOTICES
Meetings:
48267 Industrial Competitiveness, President's Commission

Commodity Futures Trading Commission
RULES
48223 Fees for request for Commission records, reports, and meeting transcripts

Consumer Product Safety Commission
NOTICES
Consent agreements:
48274 Cotton Dreams

Delaware River Basin Commission
NOTICES
48277 Hearings

Defense Department
See Air Force Department; Engineers Corps.

Employment and Training Administration
NOTICES
Adjustment assistance:
48301 J. Shoeneman Co. et al.

Employment Standards Administration
PROPOSED RULES
48249 Federal employees', claims for compensation

Energy Department
See Energy Research Office; Federal Energy Regulatory Commission.

Energy Research Office
NOTICES
48277 University Research Instrumentation Program

Engineers Corps
NOTICES
Environmental statements; availability, etc.:
48276 Ouachita River and Tributaries, Ouachita River Levees, La.

Environmental Protection Agency
RULES
Air pollution; standards of performance for new stationary sources:
48368 Pressure sensitive tape and label manufacturing facilities; volatile organic compound (VOC) emissions
48328 Volatile organic compounds (VOC) in synthetic organic chemicals manufacturing industry
NOTICES
Air quality; prevention of significant deterioration (PSD):
48285 Authority delegations; Washingtor

48284 Permit approvals
Pesticide programs:
48436 2,4,5-T and silvex products; enforcement policy on transfer, sale, or importation
48434 2,4,5-T and silvex products; intent to cancel registration, etc.

Federal Aviation Administration
RULES
Airworthiness directives:
48220 Boeing (2 documents)
48222 WKS "PZL-Rzeszow"
PROPOSED RULES
Air traffic operating and flight rules:
48364 Mode S; implementation in National Airspace Systems
48244 VOR Federal airways
NOTICES
Meetings:
48307 National Airspace Review Advisory Committee
Organization and functions:
48306 Baton Rouge, La.; General Aviation District Office
48307 Fort Worth, Tex.; General Aviation District Office
48307 Houston, Tex.; Air Carrier District Office; closure
48307 New Orleans and Lafayette, La.; General Aviation District Office
48307 Shreveport, La.; General Aviation District Office
48307 Tulsa, Okla.; Flight Standards District Office

Federal Communications Commission
RULES
Common carrier services:
48234 MTS and WATS market structures; access charges; waiver
Radio stations; table of assignments:
48234 Colorado
PROPOSED RULES
Radio stations; table of assignments:
48264 Florida; withdrawal
NOTICES
Hearings, etc.:
48286 KGY, Inc., et al.
48285 Loose-leaf publication of FCC rules; availability

Federal Emergency Management Agency
RULES
Flood insurance; special hazard areas:
48233 Florida et al.
PROPOSED RULES
Flood elevation determinations:
48259 California, et al.
48258 North Dakota; withdrawal

Federal Energy Regulatory Commission
RULES
Natural Gas Policy Act:
48223 First sellers; gas sales contracts; rehearing granted in part and denied in part and dissolving stay and refund condition
NOTICES
Hearings, etc.:
48281 Cleveland Electric Illuminating Co.
48282 Commercial Pipeline Co., Inc.
48282 Distrigas of Massachusetts Corp.
48282, 48283 Duke Power Co. (2 documents)
48283 Michigan Wisconsin Pipe Line Co.
48283 Pacific Power & Light Co.
48283 Producer-Suppliers of Transcontinental Gas Pipe Line Corp. et al.
48284 Tennessee Gas Pipeline Co.
48284 Oil pipelines, interstate; tentative valuations
Natural Gas Policy Act:
48406, 48409 Jurisdictional agency determinatioins (2 documents)

Federal Home Loan Bank Board
NOTICES
48310 Meetings; Sunshine Act

Federal Reserve System
RULES
48219 OTC margin stocks; list (Regulations G.T.U. and X); correction
NOTICES
Applications, etc.:
48287 First Oak Brook Bancshares, Inc.
48287 Kansas Bank System, Inc.
Bank holding companies; proposed de novo nonbank activities:
48287 Barclays Bank PLC et al.
Federal Open Market Committee:
48293 Domestic policy directives
Federal Reserve Bank services; fee schedules and pricing principles:
48288 Automated clearinghouse service; float reduction plan and service enhancements; inquiry; extension of time
48288 Private sector adjustment factor; methodology for calculating; inquiry
48310 Meetings; Sunshine Act

Federal Trade Commission
NOTICES
48294 Premerger notification waiting periods; early terminations

Food and Drug Administration
RULES
Animal drugs, feeds, and related products:
48229 Azaperone
48229 Farnam Cos.; sponsor name change from Merck & Co.
Food additives:
48228 Adhesive coatings and components; 2,4,7,9-tetramethyl-5-decyn-4,7-diol; correction
NOTICES
Meetings:
48295 Consumer information exchange

Food Safety and Inspection Service
PROPOSED RULES
Meat and poultry inspection:
48242 Titanium dioxide in isolated soy protein

General Services Administration
RULES
Procurement (GSA):
48231 Travel promotional material

Health and Human Services Department
See Food and Drug Administration; Health Care Financing Administration; Human Development Services Office.

Health Care Financing Administration
NOTICES
Medicaid and medicare:
48295 Physical and respiratory therapy services; schedules of guidelines; correction

Human Development Services Office
NOTICES
Grants; availability, etc.:
48380 Discretionary funds program

Immigration and Naturalization Service
PROPOSED RULES
Organization, functions, and authority delegations:
48242 Service officers, powers and duties; availability of service records

Interior Department
See Land Management Bureau; National Park Service; Reclamation Bureau; Surface Mining Reclamation and Enforcement Office.

Internal Revenue Service
PROPOSED RULES
Income taxes:
48255 Debt obligations, registration requirements; correction
48255 Household and dependent care services necessary for gainful employment; credit for expenses; correction

International Trade Administration
NOTICES
Antidumping:
48267 Steel values and parts from Japan
Scientific articles; duty free entry:
48268 Case Western Reserve University et al.

International Trade Commission
NOTICES
Import investigations:
48300 Heavy-duty staple gun tackers

Interstate Commerce Commission
NOTICES
Railroad services abandonment:
48301 Chesapeake & Ohio Railway Co.

Justice Department
See Immigration and Naturalization Service; Parole Commission.

Labor Department
See Employment and Training Administration; Employment Standards Administration; Pension and Welfare Benefit Programs Office.

Land Management Bureau
PROPOSED RULES
48400 Alaska; selection and conveyance of lands under entitlements
NOTICES
Committees; establishment, renewals, terminations, etc.:
48296 National Public Lands Advisory Council; call for nominations
Meetings:
48296 Medford District Advisory Council
Resource management plans:
48295 John Day Resource Area, Burns District, Oreg.

Management and Budget Office
NOTICES
48428 Budget rescissions and deferrals; cumulative reports

National Bureau of Standards
NOTICES
Information processing standards, Federal:
48269 FORTRAN (FIPS PUB 69); nested parentheses in expressions; interpretation

National Highway Traffic Safety Administration
RULES
Motor vehicle safety standards:
48235 Lamps, reflective devices, and associated equipment; single center, high-mounted stoplamp installation on passenger cars

National Oceanic and Atmospheric Administration
RULES
Fishery conservation and management:
48241 Pacific Coast groundfish; foreign and domestic fishing; correction
PROPOSED RULES
Fishery conservation and management:
48265 Ocean salmon off coasts of Calif., Oreg., and Wash.; correction (2 documents)
NOTICES
Marine mammal permit applications, etc.:
48271 Payne, Dr. Roger
Marine mammals:
48271 Taking incidental to commercial fishing operations; small take exemption
Meetings:
48269 Interagency Committee; participation guidelines in preparation for International Whaling Commission
48270 North Pacific Fishery Management Council
48271 Salmon and Steelhead Advisory Commission; correction

National Park Service
PROPOSED RULES
Special regulations:
48257 Rocky Mountain National Park, Colo.
NOTICES
Historic Places National Register; pending nominations:
48299 Alabama et al.
Management and development plans:
48297 Grand Canyon National Park, Ariz.; backcountry management
48298 Grand Canyon National Park, Ariz.; Grand Canyon Village
Meetings:
48297 Overmountain Victory National Historic Trail Advisory Council
48297 Santa Monica Mountains National Recreation Area Advisory Commission
Oil and gas plans of operation; availability, etc.:
48297 Cuyahoga Valley National Recreation Area, Ohio

National Technical Information Service
NOTICES
48273 Inventions, Government-owned; availability for licensing

Parole Commission
RULES
Federal prisoners; paroling and releasing, etc.:
48230 Reparole consideration guidelines for rating administrative violations; interim; correction

Pension and Welfare Benefit Programs Office
NOTICES
Employee benefit plans; prohibited transaction exemptions:
48302 Central States, Southeast and Southwest Areas Health and Welfare Fund

Pension Benefit Guaranty Corporation
NOTICES
Multiemployer pension plans; bond/escrow exemption requests:
48304 Libby, McNeill & Libby, Inc.
48305 U.S. Steel Mining Co., Inc.

Postal Service
RULES
Organization and administration:
48230, 48231 Code of ethical conduct for postal employees (2 documents)

Reclamation Bureau
NOTICES
Environmental statements; availability, etc.:
48296 Fryingpan-Arkansas Project, Colo.

Securities and Exchange Commission
PROPOSED RULES
Securities:
48245 Periodic reporting obligation suspension

Surface Mining Reclamation and Enforcement Office
PROPOSED RULES
Permanent program submissions; various States:
48255 Kentucky

Textile Agreements Implementation Committee
NOTICES
Textile consultations; review of trade:
48274 Hong Kong

Transportation Department
See also Coast Guard; Federal Aviation Administration; National Highway Traffic Safety Administration.
NOTICES
Meetings:
48306 Minority Business Resource Center Advisory Committee

Treasury Department
See also Internal Revenue Service.
NOTICES
Notes, Treasury:
48307 Z-1985 series

Separate Parts in This Issue

Part II
48328 Environmental Protection Agency

Part III
48364 Department of Transportation, Federal Aviation Administration

Part IV
48368 Environmental Protection Agency

Part V
48390 Department of Health and Human Services, Office of Human Development Services

Part VI
48400 Department of the Interior, Bureau of Land Management

Part VII
48406 Department of Energy, Federal Energy Regulatory Commission

Part VIII
48416 Committee for the Implementation of Textile Agreements

Part IX
48428 Office of Management and Budget

Part X
48434 Environmental Protection Agency

CFR PARTS AFFECTED IN THIS ISSUE

A cumulative list of the parts affected this month can be found in the Reader Aids section at the end of this issue.

3 CFR
Executive Orders:
12002 (See EO 12444) 48215
12214 (See EO 12444) 48215
12444 48215
Proclamations:
5118 48217

7 CFR
991 48219

8 CFR
Proposed Rules:
103 48242

9 CFR
Proposed Rules:
318 48242
381 48242

12 CFR
207 48219
220 48219
221 48219
226 48219

14 CFR
39 (3 documents) 48220, 48222
Proposed Rules:
43 48364
71 48244
91 48364
121 48364
127 48364
135 48364

17 CFR
145 48223
146 48223
147 48223
Proposed Rules:
240 48245
249 48245

18 CFR
270 48223
271 48223

20 CFR
Proposed Rules:
10 48249

21 CFR
175 48228
520 48229
522 48229

26 CFR
Proposed Rules:
1 (2 documents) 48255
5f 48255

28 CFR
2 48230

30 CFR
Proposed Rules:
917 48255

33 CFR
163 48230

36 CFR
Proposed Rules:
7 48257

39 CFR
447 (2 documents) 48230, 48231

40 CFR
60 (2 documents) 48328, 48368

41 CFR
101-25 48231

43 CFR
Proposed Rules:
2620 48400

44 CFR
65 48233
Proposed Rules:
65 48258
67 48259

47 CFR
1 48234
69 48234
73 48234
Proposed Rules:
73 48264

49 CFR
571 48235

50 CFR
663 48241
Proposed Rules:
663 (2 documents) 48265

Federal Register
Vol. 48, No. 202
Tuesday, October 18, 1983

Presidential Documents

Title 3—

The President

Executive Order 12444 of October 14, 1983

Continuation of Export Control Regulations

By the authority vested in me as President by the Constitution and laws of the United States of America, including section 203 of the International Emergency Economic Powers Act (50 U.S.C. 1702) (hereinafter referred to as "the Act"), and 22 U.S.C. 287c,

I, RONALD REAGAN, President of the United States of America, find that the unrestricted access of foreign parties to United States commerical goods, technology, and technical data and the existence of certain boycott practices of foreign nations constitute, in light of the expiration of the Export Administration Act of 1979, an unusual and extraordinary threat to the national security, foreign policy and economy of the United States and hereby declare a national economic emergency to deal with that threat.

Accordingly, in order (a) to exercise the necessary vigilance over exports from the standpoint of their significance to the national security of the United States; (b) to further significantly the foreign policy of the United States, including its policy with respect to cooperation by United States persons with certain foreign boycott activities, and to fulfill its international responsibilities; and (c) to protect the domestic economy from the excessive drain of scarce materials and reduce the serious economic impact of foreign demand, it is hereby ordered as follows:

Section 1. Notwithstanding the expiration of the Export Administration Act of 1979, as amended (50 U.S.C. App. 2401 *et seq.*), the provisions of that Act, the provisions for administration of that Act and delegations of authority set forth in Executive Order No. 12002 of July 7, 1977 and Executive Order No. 12214 of May 2, 1980, shall, to the extent permitted by law, be incorporated in this Order and shall continue in full force and effect.

Section 2. All rules and regulations issued or continued in effect by the Secretary of Commerce under the authority of the Export Administration Act of 1979, as amended, including those published in Title 15, Chapter III, Subchapter C, of the Code of Federal Regulations, Parts 368 to 399 inclusive, and all orders, regulations, licenses and other forms of administrative action issued, taken or continued in effect pursuant thereto, shall, until amended or revoked by the Secretary of Commerce, remain in full force and effect, the same as if issued or taken pursuant to this Order, except that the provisions of sections 203(b)(2) and 206 of the Act (50 U.S.C. 1702(b)(2) and 1705) shall control over any inconsistent provisions in the regulations with respect to, respectively, certain donations to relieve human suffering and civil and criminal penalties for violations subject to this Order. Nothing in this section shall affect the continued applicability of administrative sanctions provided for by the regulations described above.

Section 3. Provisions for the administration of section 38(e) of the Arms Export Control Act (22 U.S.C. 2778(e)) may be made and shall continue in full force and effect until amended or revoked under the authority of section 203 of the Act (50 U.S.C. 1702). To the extent permitted by law, this Order also shall constitute authority for the issuance and continuation in full force and effect of rules and regulations by the President or his delegate, and all orders, licenses, and other forms of administrative action issued, taken or continued in effect pursuant thereto, relating to the administration of section 38(e).

Section 4. This Order shall be effective as of midnight between October 14 and October 15, 1983, and shall remain in effect until terminated. It is my intention to terminate this Order upon the enactment into law of a bill reauthorizing the authorities contained in the Export Administration Act.

Ronald Reagan

THE WHITE HOUSE,
October 14, 1983.

[FR Doc. 83-28471
Filed 10-14-83; 4:37 pm]
Billing code 3195-01-M

Presidential Documents

Proclamation 5118 of October 14, 1983

World Food Day, 1983

By the President of the United States of America

A Proclamation

An adequate, wholesome food supply is essential to the physical and economic well-being of every individual and every nation. Countries throughout the world are dedicated to eliminating poverty-related hunger to the fullest extent possible. Although this objective is widely acknowledged, the resources and policies needed to achieve that object vary widely from country to country.

This Nation is richly endowed with natural resources. Through the generations, our people have developed the knowledge, the technology, the policies, and the economic system to transform our endowment into agricultural abundance. Not all nations are similarly endowed. Hunger persists throughout the world. The Food and Agriculture Organization of the United Nations estimates that as many as 500 million people suffer from poverty-related malnutrition, especially in lesser developed countries.

The United States has a long tradition of sharing its agricultural abundance with those in need. We are strongly committed to the constitution of the Food and Agriculture Organization, which calls upon member nations to "raise the levels of nutrition and standards of living of the peoples under their respective jurisdiction" and to contribute to "expanding the world economy and ensuring humanity's freedom from hunger." We have sought, and will continue to strive, to improve the economies and food production abilities of those countries where the need is greatest.

To this end, the United States has provided needy nations more than $40 billion of assistance under the Food for Peace Program since 1954. This year alone our food aid activities are assisting 70 countries. We are training an average of more than 2,000 agriculturalists per year from developing countries, and we are providing technical assistance to 50 nations in Asia, Africa, and Latin America to help develop their food research and production capabilities. In addition, we actively encourage American businesses to invest in projects that help build the agricultural economies of developing countries.

The people of the United States, as well as the people of other countries that have joined in the battle against hunger, can justifiably share a sense of accomplishment in the fact that food production per person has increased 21 percent in lesser developed countries since 1954. The concern of the international community with the problem of poverty-related malnutrition is reflected in the response to World Food Day. We particularly salute the Food and Agriculture Organization which, on World Food Day this year, celebrates 30 years of dedication to the elimination of hunger and malnutrition.

In recognition of one of the key recommendations of the 1980 report of the Presidential Commission on World Hunger, that called for efforts to be taken to increase public awareness of the world hunger problem, the Congress of the United States, by Senate Joint Resolution 81, has designated October 16, 1983, as "World Food Day" and has requested the President to issue a proclamation in observance of that day.

NOW, THEREFORE, I, RONALD REAGAN, President of the United States of America, do hereby proclaim October 16, 1983, as World Food Day and call

upon the people of the United States to observe that day with appropriate activities to explore ways in which our Nation can further contribute to the elimination of hunger in the world.

IN WITNESS WHEREOF, I have hereunto set my hand this 14th day of October, in the year of our Lord nineteen hundred and eighty-three, and of the Independence of the United States of America the two hundred and eighth.

Ronald Reagan

[FR Doc. 83-28472
Filed 10-14-83; 4:38 pm]
Billing code 3195-01-M

Editorial Note: For the President's remarks of Oct. 14, 1983, on signing Proclamation 5118, see the *Weekly Compilation of Presidential Documents* (vol. 19, no. 41).

Rules and Regulations

Federal Register
Vol. 48, No. 202
Tuesday, October 18, 1983

This section of the FEDERAL REGISTER contains regulatory documents having general applicability and legal effect, most of which are keyed to and codified in the Code of Federal Regulations, which is published under 50 titles pursuant to 44 U.S.C. 1510.
The Code of Federal Regulations is sold by the Superintendent of Documents. Prices of new books are listed in the first FEDERAL REGISTER issue of each month.

DEPARTMENT OF AGRICULTURE

Agricultural Marketing Service

7 CFR Part 991

Hops of Domestic Production; Waiver of Bona Fide Effort Requirement for the 1983-84 Marketing Year

AGENCY: Agricultural Marketing Service, USDA.

ACTION: Final rule.

SUMMARY: This regulation waives the requirement which obligates hop producers to make a bona fide effort to produce their annual allotment or have their allotment bases reduced. This rule is necessary because of the current inactive market and burdensome oversupply of hops. The waiver was recommended by the Hop Administrative Committee, which works with the USDA in administering the marketing order.

EFFECTIVE DATE: November 17, 1983.

FOR FURTHER INFORMATION CONTACT: Frank M. Grasberger, Acting Chief, Specialty Crops Branch, Fruit and Vegetable Division, AMS, USDA, Washington, D.C. 20250 (202) 447-5053.

SUPPLEMENTARY INFORMATION: This final action has been reviewed under USDA guidelines implementing Executive Order 12291 and Secretary's Memorandum No. 1512-1 and has been determined to be a "non-major" rule under criteria contained therein.

William T. Manley, Deputy Administrator, Agricultural Marketing Service, has certified that this action will not have a significant economic impact on a substantial number of small entities.

Notice inviting written comments on this action was published in the **Federal Register** on July 12, 1983 (48 FR 31866). None was received.

This rule waives the bona fide effort requirement for the 1983-84 marketing year. The requirement is contained in § 991.38(a)(5) of Order No. 991 (7 CFR Part 991), as amended, regulating the handling of hops of domestic production. The order is effective under the Agricultural Marketing Agreement Act of 1937, as amended (7 U.S.C. 601-674). The proposal was recommended unanimously by the Hop Administrative Committee.

Pursuant to § 991.38(a)(5) of the order, the right of each producer to retain all or part of his allotment base depends on his continuing to make a bona fide effort to produce his annual allotment. If a producer fails to make a bona fide effort in any year to produce his annual allotment, his allotment base must be reduced by an amount equivalent to the unproduced proportion. Subparagraph (5) also authorizes the Committee, with the approval of the Secretary, to waive the bona fide effort requirement.

The Committee recommended waiving the bona fide effort requirement for the 1983-84 marketing year because it concluded that its implementation would result in additional and unneeded production. Currently, the hop market is inactive and an oversupply of hops exists, and enforcement of the bona fide effort requirement for the 1983-84 marketing year could further depress the market.

After consideration of all relevant matter presented, including that in the notice, the Committee's recommendation, and other available information, it is found that waiving the bona fide effort requirement for the 1983-84 marketing year, as hereinafter set forth, will tend to effectuate the declared policy of the act. (The following section will not be published in the Code of Federal Regulations).

List of Subjects in 7 CFR Part 991

Marketing agreements and orders, Hops.

PART 991—[AMENDED]

Therefore, § 991.938 is added to read as follows:

§ 991.938 Waiver of bona fide effort requirement for the 1983-84 marketing year.

The bona fide effort requirement provided for in § 991.38(a)(5) shall be waived for the 1983-84 marketing year beginning August 1, 1983.

(Secs. 1-19, 48 Stat. 31, as amended (7 U.S.C. 601-674))

Dated: October 12, 1983.

Charles R. Brader,
Director, Fruit and Vegetable Division.

[FR Doc. 83-28282 Filed 10-17-83; 8:45 am]
BILLING CODE 3410-02-M

FEDERAL RESERVE SYSTEM

[Reg. G, T, U and X]

12 CFR Parts 207, 220, 221 and 226

AGENCY: Board of Governors of the Federal Reserve System.

ACTION: Final rule; correction.

SUMMARY: This document corrects a previous **Federal Register** document, FR Doc. 83-27203 (List of OTC Margin Stocks), which was published at page 45533 of the issue for October 6, 1983, to be effective October 1, 1983.

FOR FURTHER INFORMATION CONTACT: Jamie Lenoci, Financial Analyst, Division of Banking Supervision and Regulation, Board of Governors of the Federal Reserve System, Washington, D.C. 20551, (202) 452-2781.

SUPPLEMENTARY INFORMATION: Based upon corrected information received from the Company, the stock of Mutual Real Estate Investment Trust, $1.00 par shares of beneficial interest, should remain on the List of OTC Margin Stocks.

Accordingly, in accordance with § 207.6(d) of Regulation G, § 220.17(d) of Regulation T, and § 221.7(d) of Regulation U, the stock of Mutual Real Estate Investment Trust, $1.00 par shares of beneficial interest, is eliminated from the list of deletions from the Board's List and is reinstated on the complete List of OTC Margin Stocks on file at the office of the Federal Register.

By order of the Board of Governors of the Federal Reserve System, October 12, 1983.

James McAfee,
Associate Secretary of the Board.

[FR Doc. 83-28280 Filed 10-17-83; 11:09 am]
BILLING CODE 6210-01-M

DEPARTMENT OF TRANSPORTATION

Federal Aviation Administration

14 CFR Part 39

[Docket No. 83-ASW-42; Amdt. 39-4741]

Airworthiness Directives; Boeing Vertol Model 234 Helicopters

AGENCY: Federal Aviation Administration (FAA), DOT.

ACTION: Final rule.

SUMMARY: This action publishes in the **Federal Register** and makes effective as to all persons an amendment adopting a new airworthiness directive (AD) which was previously made effective as to all known U.S. owners and operators of Boeing Vertol Model 234 helicopters by individual telegrams. The AD requires a one-time inspection and removal of any excess potting material from inside the main rotor blades. The AD is prompted by reports of separation of potting material in the root end of main rotor blades and subsequent damage or loss of the main rotor blade tip cap and weights by impact of the potting material. Loss of the tip cap and weights during operation could cause injury to ground personnel or cause the pilot sufficient concern in flight due to the abnormal vibration to land the helicopter under adverse conditions such as ditching.

DATES: Effective October 26, 1983, to all persons except those to whom it was made immediately effective by telegraphic AD T83-16-51 issued August 4, 1983, which contained this amendment.

Compliance required as prescribed in the body of AD after the effective date of this AD unless already accomplished.

ADDRESSES: The applicable service information may be obtained from Boeing Vertol Company, Boeing Center, P.O. Box 1858, Philadelphia, Pennsylvania 19142. These documents may be examined at the Office of the Regional Counsel, Southwest Region, Federal Aviation Administration, 4400 Blue Mound Road, Fort Worth, Texas 76106.

FOR FURTHER INFORMATION CONTACT: Joseph E. Chrastil, ANE-172, New York Aircraft Certification Office, Federal Aviation Administration, 181 South Franklin Avenue, Valley Stream, New York 11581, telephone number (516) 791-6221.

SUPPLEMENTARY INFORMATION: On August 4, 1983, telegraphic AD T83-16-51 was issued and made effective immediately as to all known U.S. owners and operators of Boeing Vertol Model 234 helicopters. The AD required inspection inside the main rotor blade spars for excessive potting material and removal if found. The AD was prompted by reports that main rotor blade potting material had been broken off inside the spar of Army CH-47D helicopters and struck the tip cap at high velocity causing damage and loss of tip cap and weights which set up abnormal vibrations in the helicopter. Two model 234 main rotor blades were found to have debris inside the tip cap area. Loss of the tip cap and weights during operation could cause injury to ground personnel or cause the pilot sufficient concern in flight due to the abnormal vibration to land the helicopter under adverse conditions such as ditching.

Since it was found that immediate corrective action was required, notice and public procedure thereon were impracticable and contrary to public interest, and good cause existed to make the AD effective immediately by individual telegrams issued August 4, 1983, to all known U.S. owners and operators of Boeing Vertol Model 234 helicopters. These conditions still exist and the AD is hereby published in the Federal Register as an amendment to § 39.13 of Part 39 of the Federal Aviation Regulations to make it effective as to all persons.

List of Subjects in 14 CFR Part 39

Air transportation, Aircraft, Aviation safety, Safety.

Adoption of the Amendment

Accordingly, pursuant to the authority delegated to me by the Administrator, § 39.13 of Part 39 of the Federal Aviation Regulations (14 CFR 39.13) is amended by adding the following new airworthiness directive:

Boeing Vertol Company: Applies to Boeing Vertol Model 234 series helicopters certificated in all categories.

Compliance is required as indicated (unless already accomplished).

To prevent possible hazards in flight associated with damage or loss of main rotor blade tip cap and weights, accomplish the following:

(a) Prior to further flight on helicopters equipped with main rotor blades with less than 100 hours' time in service, conduct a borescope inspection of the inside root end of the spar for excessive potting material. It will be necessary to remove the tip cap to conduct this inspection. Remove any cracked potting material or any potting material in excess of one cubic inch. Remove any excess potting material in accordance with Boeing Vertol Service Bulletin No. 234621004 dated July 27, 1983, or FAA approved equivalent.

(b) For main rotor blades with 100 hours' time in service but less than 500 hours' time in service, conduct the inspection and removal of material as stated in paragraph (a) within the next 30 hours' time in service.

(c) For main rotor blades with 500 or more hours' time in service conduct the inspection and removal of material as stated in paragraph (a) within the next 75 hours' time in service.

(d) An equivalent method of compliance with this AD may be used when approved by the Manager, New York Aircraft Certification Office, 81 South Franklin Avenue, Valley Steam, New York 11581.

This amendment become effective October 26, 1983, as to all persons except those persons to whom it was made immediately effective by telegraphic AD No. T83-16-51 issued August 4, 1983, which contained the amendment.

(Secs. 313(a), 601, and 603, Federal Aviation Act of 1958, as amended (49 U.S.C. 1354(a), 141, and 1423); 49 U.S.C. 106(g) [Revised, Pub. L. 97-449, January 21, 1983[; 14 CFR 11.89)

Note.— The FAA has determined that this regulation is an emergency regulation that is not considered to be major under Executive Order 12291. It is impracticable for the agency to follow the procedures of Order 12281 with respect to this rule since the rule must be issued immediately to correct an unsafe condition in aircraft. It has been further determined that this action involves an emergency regulation under DOT Regulatory Policies and Procedures (44 FR 11034; February 26, 1979). If this action is subsequently determined to involve a significant/major regulation, a final regulatory evaluation or analysis, as appropriate, will be prepared and placed in the regulatory docket (otherwise, an evaluation or analysis is not required). A copy of it, when filed, may be obtained by contracting the person identified under the caption **FOR FURTHER INFORMATION CONTACT.**

Issued in Fort Worth, Texas, on October, 1983.

F. E. Whitfield,

Acting Director, Southwest Region.

[FR Doc. 83-28306 Filed 10-17-83; 8:45 am]

BILLING CODE 4910-13-M

14 CFR Part 39

[Docket No. 83-NM-91-AD; Amdt. 39-4745]

Airworthiness Directives; Boeing Model 747 Series Airplanes

AGENCY: Federal Aviation Administration (FAA), DOT.

ACTION: Final rule.

SUMMARY: This amendment adds a new airworthiness directive (AD) applicable to certain B-747 series airplanes which requires inspection of trailing edge flap tracks for corrosion and cracking. This AD is prompted by reports of heavy corrosion on three airplanes and resultant cracking of two trailing edge

flap tracks. The failure of the aft end of the flap track could cause the trailing edge flap to separate from the airplane.

DATES: Effective October 27, 1983. Compliance schedule as prescribed in the body of the AD, unless already accomplished.

ADDRESSES: The applicable service bulletin may be obtained upon request from the Boeing Airplane Company, P.O. Box 3707, Seattle, Washington 98124. This information also may be examined at the Federal Aviation Administration, Northwest Mountain Region, Seattle Aircraft Certification Office, 9010 East Marginal Way South, Seattle, Washington.

FOR FURTHER INFORMATION CONTACT: Mr. Owen Schrader, Airframe Branch, ANM-120S, Seattle Aircraft Certification Office, FAA, Northwest Mountain Region, 9010 East Marginal Way South, Seattle, Washington, telephone (206) 431-2923. Mailing address: FAA, Northwest Mountain Region, 17900 Pacific Highway South, C-68966, Seattle, Washington 98168.

SUPPLEMENTARY INFORMATION: There have been reports of various levels of corrosion on trailing edge flap tracks numbers 1 through 8. Heavy corrosion was found on three airplanes with resultant cracking of two flap tracks. The corrosion is caused by the accumulation of water in the aft end of the flap track cavity. Extensive cracking could cause failure of the aft end of the flap track. Failure of the flap track could result in separate of the flap under some conditions, and the resultant trajectory of the flap could impact on the horizontal stabilizer, jeopardizing continued safe flight.

Since this condition is likely to exist or develop on other B-747 airplanes of the same type design, and since a situation exists that requires immediate adoption of this regulation, it is found that notice and public procedure are impracticable and good cause exists for making this amendment effective in less than 30 days.

List of Subjects: 14 CFR Part 39

Aviation safety, Aircraft.

Adoption of the Amendment

Accordingly, pursuant to the authority delegated to me by the Administrator, § 39.13 of Part 39 of the Federal Aviation Regulations (14 CFR 39.13) is amended by adding the following new airworthiness directive:

Boeing: Applies to those Model 747 series airplanes certificated in all categories listed in Boeing Alert Service Bulletin 747-57A2225, Revision 1, or later FAA approved revision. To prevent failure of the trailing edge flap tracks, accomplish the following:

A. Inspect the external surface of the trailing edge flap tracks visually for cracks or corrosion penetration within the threshold landings set forth in Table I after the effective date of this AD, and thereafter at the repetitive intervals not to exceed those shown in Table I, below, in accordance with Boeing Alert Service Bulletin 747-57A2225, Revision 1, or later FAA approved revision. These external visual inspections are to continue until the modifications of paragraph D are accomplished.

TABLE I

Effectively airplane line No.	Threshold for initial inspections	Repetitive inspection intervals	
		During the initial 250 landings after effective date of the AD.	During the 251 thru 500 landings after effective date of the AD.
001 to 400 (group I).	50 landings.....	50 landings.....	30 landings
401 to 584 (group II).	100 landings...	100 landings...	100 landings.

B. If any cracks are found in any flap track, replace the cracked track before further flight. This replacement criterion applies to all future inspections required by this AD.

C. If any corrosion pits, which have completely penetrated the track web, are visible on the outside of any track web, perform a repeat visual external inspection for cracks in accordance with Boeing Alert Service Bulletin 747-57A2225, Revision 1, or later FAA approved revision, at intervals not exceeding 30 landings. Replace the track within 200 landings after discovery of the corrosion pits, or before further flight if a crack is found. These replacement criteria apply to all future inspections required by this AD.

D. If there are no visible track web cracks and no corrosion pits through either web, modify by drilling the ⅝-inch diameter drain holes in accordance with Boeing Alert Service Bulletin 747-57A2225, Revision 1, or later FAA approved revision, within 500 landings or six months after the effective date of this AD, whichever occurs first. Flush the track cavity per instructions in the Service Bulletin.

Note.— Airplane Flap Tracks previously modified by a single ⅜-inch diameter drain hole must still be modified in accordance with the requirements of this paragraph.

E. Concurrent with the modification of paragraph D., above, perform an internal borescope inspection in accordance with Boeing Alert Service Bulletin 747- 57A2225, Revision 1, or later FAA approved revision, to determine if corrosion exists. If corrosion or pitting is found, determine its extent by accomplishing the track web X-ray inspection specified in the service bulletin.

1. If heavy internal web corrosion exists, repeat visual external inspection for cracks or corrosion penetration through track webs at intervals not exceeding 50 landings in accordance with Boeing Alert Service Bulletin 747-57A2225, Revision 1, or later FAA approved revision.

2. If moderate internal web corrosion exists, repeat visual external inspection for cracks or corrosion penetration through track webs at intervals not exceeding 100 landings in accordance with Boeing Alert Service Bulletin 747-57A2225, Revision 1, or later FAA approved revision.

3. If light internal corrosion exists, repeat visual external inspection for cracks or corrosion penetration through track webs at intervals not exceeding 250 landings in accordance with Boeing Alert Service Bulletin 747-57A2225, Revision 1, or later FAA approved revision.

F. Repeat the above X-ray inspection in accordance with Boeing Alert Service Bulletin 747-57A2225, Revision 1, or later FAA approved revision, on tracks indicating medium or light internal web corrosion at intervals not exceeding one year or until heavy web corrosion is indicated, whichever occurs first. When the status of the internal corrosion changes then the inspection interval changes as indicated in paragraph E (1), (2), or (3), above.

G. Apply organic corrosion inhibitor (BMS 3-23 or equivalent) to the aft cavity of each flap track after the borescope inspection of paragraph E and at intervals not exceeding 6 months in accordance with Boeing Alert Service Bulletin 747-57A2225, Revision 1, or later FAA approved revision.

H. For purposes of complying with this AD, subject to acceptance by the assigned FAA Principal Maintenance Inspector, the number of landings may be determined by dividing each airplane's hours time in service by the operator's fleet average from takeoff to landing for the airplane type.

I. Upon request of the operator, a FAA Principal Maintenance Inspector, subject to prior approval by the Manager, Seattle Aircraft Certification Office, FAA, Northwest Mountain Region, may adjust the inspection interval, if the request contains substantiating data to justify the increase for that operator.

J. Special flight permits may be issued in accordance with Section 21.197 and 21.199 of the Federal Aviation Regulations to operate airplane to a base for the accomplishment of the inspections and/or modifications required by the AD.

K. Alternate means of compliance or other actions which provide an equivalent level of safety may be used when approved by the Manager, Seattle Aircraft Certification Office, FAA, Northwest Mountain Region.

All persons affected by this directive who have not already received these documents from the manufacturer may obtain copies upon request to Boeing Commercial Airplane Company, P.O. Box 3707, Seattle, Washington 98124. These documents may also be examined at the FAA, Northwest Mountain Region, 9010 East Marginal Way South, Seattle, Washington.

This amendment becomes effective October 27, 1983.

(Secs. 313(a), 314(a), and 601 through 610, and 1102 of the Federal Aviation Act of 1958 (49 U.S.C. 1354(a), 1421 through 1430, and 1502); 49 U.S.C. 106(g) (Revised, Pub. L. 97-449, January 12, 1983); and 14 CFR 11.89)

Note.—The FAA has determined that this regulation is an emergency regulation that is not major under Executive Order 12291. It is impracticable for the agency to follow the procedures of Order 12291 with respect to this rule since the rule must be issued immediately to correct an unsafe condition in the aircraft. It has been further determined that this document involves an emergency regulation under DOT Regulatory Policies and Procedures (44 FR 11034; February 25, 1979). If this action is subsequently determined to involve a significant/major regulation, a final regulatory evaluation or analysis, as appropriate, will be prepared and placed in the regulatory docket (otherwise, an evaluation is not required). A copy of it may be obtained by contacting the person identified under the caption "FOR FURTHER INFORMATION CONTACT."

Issued in Seattle, Washington on October 7, 1983.

Wayne J. Barlow,

Acting Director, Northwest Mountain Region.

[FR Doc. 83-28305 Filed 10-17-83; 8:45 am]

BILLING CODE 4910-13-M

---

14 CFR Part 39

[Docket No. 83-ANE-23; Amdt. 39-4743]

Airworthiness Directives; WSK "PZL-Rzeszow" PZL-3S Engines

AGENCY: Federal Aviation Administration (FAA), DOT.

ACTION: Final rule; request for comments.

SUMMARY: This Airworthiness Directive (AD) supersedes emergency AD 83-15-06 issued on July 27, 1983, applicable to the WSK "PZL-Rzeszow" PZL-3S engines, which prohibited operation of that engine in combination with the Dowty Rotol Model CR-289/3-110-F/1, 11, 12 propellers. This AD continues the prohibition against the use of these engines in combination with the specified propellers and adds a new requirement that these engines must be inspected for wear or damage before being operated with other model propellers. This AD is needed to prevent worn or damaged engines from being returned to service after removal of a specified propeller.

DATES: Effective October 26, 1983. Compliance schedule—as prescribed in text of AD.

Comments on the rule must be received on or before December 27, 1983.

ADDRESS: Information supporting this AD is in the Rules Docket, FAA, Office of the Regional Counsel, 12 New England Executive Park, Burlington, Massachusetts 01803.

FOR FURTHER INFORMATION CONTACT: George F. Mulcahy, Engine and Propeller Standards Staff, ANE-110, Aircraft Certification Division, New England Region, Federal Aviation Administration, 12 New England Executive Park, Burlington, Massachusetts 01803, telephone: (617) 273-7330.

SUPPLEMENTARY INFORMATION: AD 82-23-04, Amendment 39-4489, effective November 15, 1982, was issued as a result of a series of propeller bolt failures and actual in-flight propeller separations. One incident of propeller separation occurred during an emergency landing. A second incident resulted in an in-flight separation with subsequent destruction of the aircraft. Engine teardown and inspection, in all cases, disclosed excess wear on the rear counterweight pins and counterweight assembly itself. Therefore, AD 82-23-04 was issued to require inspection for wear on all engines within 25 hours of operation from the AD's effective date and every 100 hours thereafter.

Failures, including propeller separation continued to occur irrespective of compliance with AD 82-23-04. Additionally these failures occurred well within the periodic inspection interval of the AD. It was clear that a serious airworthiness condition persisted which could lead to loss of aircraft and potential injury. Therefore, an emergency AD was issued to prohibit operation of the PZL-3S engine in combination with the Dowty Rotol Model CR-289/3-110-F/1, 11, 12, propellers.

After issuing emergency AD 83-15-06 the agency determined that engines previously operated in combination with the specified model propellers might have sustained premature wear or damage. Therefore, the agency is superseding the emergency AD with a new AD which maintains the existing prohibitions and, in addition, requires that engines which had been used in combination with the specified propellers must be inspected prior to further use with other model propellers.

Since a situation exists that may result in the loss of an aircraft, immediate adoption of this regulation is required. It is found that notice and public procedures hereon are impracticable, and good cause exists for making this amendment effective in less than 30 days.

Request for Comments on the Rule

Although this action is in the form of a final rule which involves requirements affecting immediate flight safety and, thus, was not preceded by notice and public procedures, comments are invited on the rule.

When the comment period ends, the FAA will use the comments submitted, together with other available information, to review the regulation. After the review, if the FAA finds that changes are appropriate, it will initiate rulemaking proceedings to amend the regulation. Comments that provide the factual basis supporting the views and suggestions presented are particularly helpful in evaluating the effects of the AD and determining whether additional rulemaking is needed. Comments are specifically invited on the overall regulatory, economic, environmental, and energy aspects of the rule that might suggest a need to modify the rule. Send comments to Federal Aviation Administration, Office of Regional Counsel, 12 New England Executive Park, Burlington, Massachusetts 01803.

List of Subjects in 14 CFR Part 39

Propellers, Engine, Aircraft, Aviation safety.

Adoption of the Amendment

Accordingly, pursuant to the authority delegated to me by the Administrator, § 39.13 of Part 39 of the Federal Aviation Regulations (14 CFR 39.13) is amended by adding the following new AD:

Wytwornia Sprzetu Komunikacyjnego "PZL-Rzeszow": Applies to PZL-3S engine.

Compliance is required as indicated unless already accomplished.

To preclude the possibility of in-flight propeller loss, accomplish the following:

(a) Operation of any of the following engine propeller combinations is prohibited:

(1) WSK "PZL-RZESZOW" PZL-3S engine with Dowty Rotol CR 289/3-110-F/1 propeller.

(2) WSK "PZL-RZESZOW" PZL-3S engine with Dowty Rotol CR 289/3-110-F/11 propeller.

(3) WSK "PZL-RZESZOW" PZL-3S engine with Dowty Rotol CR 289/3-110-F/12 propeller.

(b) Engines which have had service in any of the engine/propeller combinations listed in (a) must be inspected for wear prior to further operation with any other propellers. This inspection must include a visual inspection of the disassembled rear crankshaft, rear counterweight, rear counterweight pins, front crankshaft, crankshaft nut and propeller shaft.

(c) If, during inspections required in (b), any signs of unusual wear or damage are detected, remove the engine from service, inspect for secondary damage, and repair as necessary prior to return to service.

(d) Alternate inspections, modifications or other actions which provide an equivalent

level of safety may be used if approved by the Manager, Aircraft Certification Division, New England Region, Federal Aviation Administration, 12 New England Executive Park, Burlington, Massachusetts.

(e) This AD supersedes AD 82-23-06 amendment 39-4489 and emergency AD 83-15-06.

This amendment becomes effective October 26, 1983.

(Secs. 313(a), 601, and 603, Federal Aviation Act of 1958, as amended (49 U.S.C. 1354(a), 1421, and 1423); (49 U.S.C. 106(g) revised, Pub. L. 97-449, January 12, 1983); 14 CFR 11.89)

Note.—The FAA has determined that this regulation is an emergency regulation that is not major under Section 8 of Executive Order 12291. It is impracticable for the agency to follow the procedures of Order 12291 with respect to this rule since the rule must be issued immediately to correct an unsafe condition in aircraft. It has been further determined that this document involves an emergency regulation under DOT Regulatory Policies and Procedures (44 FR 11035; February 26, 1979). If this action is subsequently determined to involve a significant regulation, a final regulatory evaluation or analysis, as appropriate, will be prepared and placed in the regulatory docket (otherwise, an evaluation or analysis is not required). A copy of it, when filed, may be obtained by contacting the person identified under the caption **FOR FURTHER INFORMATION CONTACT.**

Issued in Burlington, Massachusetts, on October 7, 1983.

Robert E. Whittington,

Director, New England Region.

[FR Doc. 83-28304 Filed 10-17-83; 8:45 am]

BILLING CODE 4910-13-M

COMMODITY FUTURES TRADING COMMISSION

17 CFR Parts 145, 146, and 147

Schedule of Fees for Requests for Commission Records, Reports of the Commission, and Transcripts of Commission Meetings

Correction

In FR Doc. 83-27403, beginning on page 46010 in the issue of Tuesday, October 11, 1983, the amendatory paragraph immediately following the Part 145 heading in the second column of page 46011 should read, "1. In § 145.9b, paragraph (a) is amended by redesignating paragraphs (a) (9) and (10) as paragraphs (a) (10) and (11), respectively."

BILLING CODE 1505-01-M

DEPARTMENT OF ENERGY

Federal Energy Regulatory Commission

18 CFR Parts 270 and 271

[Docket Nos. RM80-21-000 and RM80-21-001; Order No. 108-A]

Natural Gas Policy Act of 1978; Sellers of Gas; State Severance Taxes

Issued: October 12, 1983.

AGENCY: Federal Energy Regulatory Commission.

ACTION: Order Granting in Part and Denying in Part Rehearing of Order No. 108 and Dissolving Stay and Refund Condition.

SUMMARY: This order on rehearing affords sellers of gas subject to Subparts E and F of the Commission's regulations the same opportunity to collect an allowance for State severance taxes under section 110(a)(1) as the Commission has afforded sellers of interstate gas. This order removes the presumption of Order No. 108, stayed on December 24, 1980, that the maximum lawful prices in NGPA section 105 or 106(b) are presumed to recover all State severance taxes under section 110(a)(1) attributable to the production of natural gas borne by the seller. This order recognizes the lawfulness of continued State severance tax collections under section 110(a)(1) in excess of the otherwise applicable maximum lawful price, if contractually authorized. This order permits the parties to a gas sales contract prospectively to amend the contract to authorize collection of State severance taxes for deliveries commenced on or after the effective date of this order, precludes retroactively effective contract amendments and retroactive collections of State severance taxes for gas delivered prior to the effective date of this order, and ratifies contractually authorized collections of State severance taxes made before the effective date of this order. The order leaves it to the parties to determine whether or not the contract authorizes collection of State severance taxes under section 110(a)(1).

As a consequence of removing the presumption of full recovery of State severance taxes, this order dissolves the stay and refund condition of the stay, thereby permitting sellers of gas to retain amounts collected from January 1, 1981 through the effective date of this order. Collections of state severance taxes made under this order are not subject to any refund condition.

EFFECTIVE DATE: The amendments to Commission regulations and dissolution of the stay and refund condition of the stay shall all be effective November 17, 1983.

FOR FURTHER INFORMATION CONTACT: Albert J. Francese, Office of the General Counsel, Federal Energy Regulatory Commission, 825 North Capitol Street, NE., Washington, D.C. 20426, (202) 357-8033.

SUPPLEMENTARY INFORMATION:

Before Commissioners: A. G. Sousa, Acting Chairman; J. David Hughes and Oliver G. Richard III.

I. Introduction

In this order, the Commission considered whether to implement the presumption of full recovery of existing State severance taxes of Order No. 108 or to remove the presumption. In light of the Commission's actions in Order Nos. 94-B and D and in response to petitions, this order rescinds the presumption of full recovery of State severance taxes and dissolves the stay and refund conditions of the stay. By removing the presumption of full recovery of State severance taxes, this order ratifies contractually authorized collections made prior to the effective date of this order and precludes retroactive collections for deliveries made prior to the effective date of this order and retroactively effective contract amendments. This order permits parties to amend their contracts prospectively to collect an allowance for State severance taxes and prospectively permits the continued collection by first sellers subject to Subparts E and F of an amount in excess of the otherwise applicable maximum lawful price for State severance taxes pursuant to NGPA section 110(a)(1) and § 271.1102(a) of the Commission's Subpart K regulations. These actions will be effective 30 days after publication in the Federal Register.

On November 14, 1980 the Commission issued a final rule in Order No. 108 which provided that the maximum lawful prices in sections 105 and 106(b) of the Natural Gas Policy Act (NGPA), implemented in Subparts E (existing intrastate contracts and successor contracts) and F (intrastate rollover contracts) of the Commission's regulations, are presumed to recover all State severance taxes attributable to the production of natural gas borne by the seller if levied on the sale by state law enacted on or before November 9, 1978.[1]

[1] 18 CFR 271.1102(c)(1) (1983). *See*, Final Rule, "Sales of Natural Gas Made Under the NGPA

Continued

In so doing, the final rule, in conjunction with Subparts E and F of the Commission's regulations, precluded reimbursement of taxes under section 110(a)(1) to the extent reimbursement would cause the price to exceed the maximum lawful price prescribed in section 105 or 106(b). The final rule also provided that increased State severance taxes which result from an increase in the State severance tax rate by State law enacted after November 9, 1978 may be collected by first sellers of gas sold under section 105 or 106(b) over and above the applicable maximum lawful price to the extent such reimbursement is necessary.[2]

In addition, the definitions of "contract price" and "price under the terms of the contract" in § 271.504 of the Commission's regulations [3] were amended to clarify that the total proceeds of the sale are to be used in establishing ceiling prices under Subparts E and F. Finally, the Commission determined that, in the absence of Commission guidance prior to issuance of Order No. 108, parties to contracts may have interpreted the regulations as authorizing collections of State severance taxes. For this reason the Commission concluded that it would be inequitable to apply the final rule retroactive to December 1, 1978, and, accordingly, did not require refunds of tax collections made prior to January 1, 1981 that would have been precluded by the final rule.

Several petitions for rehearing and requests for stay were filed. In response to these petitions, the Commission stayed the January 1, 1981 effective date of the amendments to §§ 271.504 and 271.1102 pending rehearing. The stay was granted on the conditions that payments of State severance taxes for deliveries of natural gas on or after January 1, 1981, in excess of the applicable maximum lawful prices under Subparts E and F be subject to refund and pass through to the customers.[4] Order No. 108 has, therefore, never become effective, and the stay continues in effect.

II. Specifications of Error

The Commission received ten petitions for rehearing of Order No. 108.[5] With the exception of two gas distribution companies,[6] all petitioners argued that Order No. 108 is arbitrary, capricious, and an abuse of discretion for a variety of constitutional, statutory, and practical reasons. While producers object to the denial of what they consider to be a statutory right under NGPA section 110 to collect reimbursement for State severance taxes, pipelines are concerned that the final rule disregards the contractual expectations and intent of the parties in violation of the contract-based origin of section 105 ceiling prices. In the only petition supporting Order No. 108, gas distribution petitioners, on the other hand, seek to make Order No. 108 retroactively effective to December 1, 1978 or April 1, 1980, the proposed effective date in the Notice of Proposed Rulemaking in Docket No. RM 80–21.

The most fundamental issue raised on rehearing is the nature of the Commission's authority under NGPA section 110(a)(1). Citing the language of section 110 and the related explanatory discussion of the NGPA Conference Report,[7] producers and pipelines argue that the Commission misconstrued its authority under NGPA section 110(a)(1). Congress, they believe, gave the Commission no discretion to deny section 110 allowances for State severance taxes for intrastate sellers. Producers state that section 110(a)(1) confers a statutory right or entitlement to full reimbursement for State severance taxes borne by them and attributable to production and that the right to collect such allowances applies to all NGPA pricing sections without exception. Some petitioners add that because all ceiling prices are to be considered exclusive of State severance taxes under section 110(a)(1) there would be no double recovery of taxes if the Commission permitted collection of State severance taxes under section 110.

With the exception of local distribution companies, all petitioners take issue with the Commission's presumption of full reimbursement for all existing State severance taxes in the sections 105 and 106(b) ceiling prices. They assert that the presumption makes factually inaccurate assumptions concerning the operation of the intrastate market, that it is inconsistent with NGPA section 101(b)(9), and that it constitutes contract interpretation. Producers and pipelines argue that the presumption disregards existing contracts with specific provisions for tax reimbursement or redetermination clauses which otherwise permit escalation above the section 102 ceiling price of section 105(b)(1). Some petitioners complained that the presumption was an effort by the Commission to freeze taxes as a permanent cost component of the ceilng price even though the parties never expressly agreed to tax reimbursement. Further, other petitioners believed that the Commission should permit recovery under section 110 of increases in taxes caused by increases in the price of gas as a result of operation of definite or indefinite price escalator clauses or NGPA inflation adjustments.

Producers further argue that the presumption reduces the value of the maximum lawful price with Congress, in enacting the NGPA, did not intend to compensate for State severance taxes. Congress, they argue, established section 110(a)(1) as a vehicle separate and apart from the ceiling price sections of Title I to compensate for State severance taxes as an addition to all first sale maximum lawful prices. They further argue that Order No. 108 is inconsistent with the key policy objective of the NGPA to eliminate disparities between intrastate and interstate markets and that Order No. 108 results in undue discrimination against intrastate producers and pipelines in the production, pricing, and sale of gas in the intrastate market.

Most petitioners believe that in order to equalize pricing and supply opportunities between the interstate and intrastate markets, producers should be entitled to reimbursement for State severance tax payments actually made under section 110(a)(1) if reimbursement is authorized under the terms of the gas sales contract. Petitioners argue that the Commission should permit the parties to amend their contracts prospectively to authorize reimbursement of taxes.

Some producers also argue that Order No. 108 is arbitrary, capricious, and inequitable because it terminates an on-going practice of tax reimbursement under some intrastate contracts. For this reason, petitioners state that the Commission acted contrary to law and

(Sections 110, 105 and 106(b)) that are Sales of Intrastate Gas," Order No. 108, issued Nov. 14, 1980, 45 FR 76664 (Nov. 20, 1980), FERC Stats. and Regs. Preambles ¶ 30,205 (1977–81). Notice of Proposed Rulemaking, "Proposed Regulations Under Section 110 of the NGPA," Docket No. RM80–21, issued Jan. 18, 1980, 45 FR 5747 (Jan. 24, 1980), FERC Stats. and Regs. ¶ 32,054 (Proposed Regs. 1977–81).

[2] 18 CFR 271.1102(c)(2) (1983).

[3] 18 CFR 271.504 (a) and (b) (1983).

[4] Order Granting Temporary Conditional Stay and Granting Rehearing for Purposes of Further Consideration, "Regulations Under Sections 100, 105 and 106(b) of the NGPA," issued December 24, 1980, 46 FR 2975 (Jan. 13, 1981).

[5] Petitions for rehearing in Docket No. RM80–21 were filed by: Indicated Producers; Mobile Gas Service Corp. and Clarke-Mobile Counties Gas District, Alabama; Delhi Gas Pipeline Corp.; Terra Resources Inc.; Lone Star Gas Co.; Valero Transmission Co.; Amoco Production Co.; Isaac Arnold, Jr.; Texas Gas Exploration Corp.; Pennzoil Co. and Pennzoil Producing Co.; and Damson Oil Corp., *et al.*

[6] Mobile Gas Service Corp. and Clarke-Mobile Counties Gas District, Alabama.

[7] "All ceiling prices under the Act are exclusive of State severance taxes borne by the seller. * * *" S. Rep. No. 1126, 95th Cong., 2d Sess. 90 (Aug. 18, 1978); I FERC Stats. and Regs. ¶3,101 at 3,098.

the Fifth Amendment of the United States Constitution, which prohibits the taking of private property for public use without just compensation and the deprivation of property without due process of law.[8] In light of these arguments, some petitioners objected to the order's reliance on the section 502(c) adjustment procedure as a meaningless remedy and as another opportunity of the Commission to use its discretion in an arbitrary way.[9]

III. Discussion

A. Background

By its interim NGPA regulations,[10] the Commission attempted to preserve the status quo on November 9, 1978 with respect to the obligations of the parties to intrastate gas sales contracts. The Commission accomplished this objective by prohibiting contract amendments which shifted production-related costs from the seller to the purchaser in a manner that differed from the contract in effect on November 9, 1978.[11] Using this regulatory approach, the Commission sought to minimize further price increases for existing intrastate gas contracts in furtherance of a congressional objective in enacting the NGPA.[12]

On November 10, 1980, the Commission issued Order No. 68–A, denying in part and granting in part, petitions to rehear Order No. 68.[13] In Order No. 68–A, the Commission discussed that the term "price" for purposes of section 105 or 106(b) has meaning only when related to a specific set of obligations allocated to the parties as of November 9, 1978. The Commission concluded that the sections 105 and 106(b) ceiling rates themselves "provide reimbursement for production-related costs borne by the seller according to the terms of the contract."[14]

The presumption of full recovery in Order No. 108 reflects a line of reasoning similar to that followed in Order No. 68. By precluding the collection by section 105 or 106(b) sellers of an allowance for State severance taxes as an addition to the ceiling price, the Commission's action in Order No. 108 reflected the Commission's emphasis on the NGPA objective of minimizing price increases of section 105 or 106(b) gas.

Order No. 108 amended § 271.1102 to provide that first sellers of gas subject to section 105 or 106(b) may not collect section 110(a)(1) allowances for State severance taxes in addition to the otherwise applicable maximum lawful price except in the event of an increase in such taxes by a tax rate change enacted by State law after November 9, 1978. The Commission noted that section 110(a)(1) permits the first seller to collect a State severance tax allowance in addition to the ceiling price only to the extent necessary for the seller to recover such taxes. The Commission believed that the ceiling prices under section 105 or 106(b) are the result of contract negotiation[15] and that a reasonable businessman would recover all business expenses, including State severance taxes, in the "contract price" or "price under the terms of the contract." Because of these considerations, tax recovery was considered a permanent and continuing component of the section 105 or 106(b) ceiling price. The Commission stated that since reimbursement for State severance taxes was included within the maximum lawful price the seller should not be permitted to recover State severance taxes other than tax increases again through an allowance under section 110.[16] The Commission believed that such recovery would not be "necessary."

In Order No. 94–B,[17] the Commission reassessed the policy basis for precluding sellers of gas subject to section 105 or 106(b) from collecting production-related cost allowances. The Commission concluded that if it were to continue to preclude such sellers from changing pre-NGPA agreements respecting obligations to provide production-related costs, the result would be to establish a wide variation in treatment between interstate and intrastate gas flowing at the time of enactment of the NGPA.[18] The Commission eliminated the "no cost-shift rule" in Order No. 94–B because it concluded that its preservation would exaggerate differences between the interstate and intrastate gas market and discriminate against intrastate gas.

The Commission extended to sellers of gas subject to sections 105 or 106(b) basically the same opportunities to collect production-related cost allowances as other sellers as a means to eliminate the dual market that had arisen under the Natural Gas Act and which the Congress sought to eliminate under the NGPA.[19] The Commission was persuaded that even though the objectives of the NGPA conflicted, an appropriate balancing of NGPA objectives required that greater weight should be given prospectively to the Congressional purpose of developing a national market for gas. As a consequence of this change in policy, Order No. 94–B provided that collections by a section 105(b)(1) seller of an adjustment for production-related costs shall not be considered to exceed the section 102 new gas price.[20]

B. Rescission of the Presumption of Full Recovery

In light of Order Nos. 94–B and D, the Commission believes that the final rule of Order No. 108, which would have

---

[8] As a result of the removal of § 271.1102(c) from the Commission's regulations, there is no need to respond to the merits of this allegation.

[9] The Commission referred to the section 502(c) adjustment procedure as a means to secure relief from the application of § 271.1102(c). Because the Commission in this order is rescinding § 271.1102(c), it is unnecessary to respond to this argument.

[10] Interim Regulations Implementing the Natural Gas Policy Act of 1978, Docket No. RM79–3 (issued December 1, 1978), 43 FR 56,448 (Dec. 1, 1978), FERC Stat. and Reg. Preamble ¶30,026 (1977–1981).

[11] The "no-cost shift" rule was codified at §§ 271.505(a) and 271.604(b). Order No. 94–B rescinded the no-cost shift rule.

[12] *See*, Order No. 94–B, "Order Amending Regulations in Subpart B of Part 270 and Subparts E, F, and K of Part 271, and Affirming Certain Final Regulations issued in Order No. 68," Docket No. RM80–74–003 (issued Jan. 24, 1983), 48 FR 5,190, 5,193, fn. 27, (Feb. 3, 1983), III FERC Stats. and Regs. ¶30,421; and Order No. 94–D, "Order Denying Rehearing and Denying Stay of Order No. 94–B," Docket No. RM80–47–003, et al. (issued May 24, 1983), 48 FR 24,051 (May 31, 1983).

[13] In Order No. 68, the Commission implemented final rules for sections 105 and 106(b) of the NGPA. Order No. 68 clarified the definition of the term "price" to mean all the proceeds of the sale and kept the no-cost shift rule substantively intact. Order No. 68, "Final Regulations Under Sections 105 and 106(b) of the Natural Gas Policy Act of 1978," Docket No. RM80–14 (issued Jan. 18, 1980), 45 FR 5,678 (Jan. 24, 1980), FERC Stat. and Reg. Preambles ¶30,125 (1977–1981); Order No. 68–A, "Order Clarifying Order No. 68, Granting in Part and Denying in Part Rehearing of Order No. 68, and Amending Regulations in Subparts E, F, and K of Part 271," (issued Nov. 10 1980), 45 FR 76,676 (Nov. 20, 1978), FERC Stats. and Reg. Preambles ¶30,209 (1977–1981).

[14] Order No. 68–A, *Supra*, ¶30,209 at 31,397.

[15] *See*, Pennzoil Co. v. FERC, 645 F.2d 360, 374–5 (5th Cir. 1981), *cert. denied*, 454 U.S. 1142 (1982).

[16] Order No. 108, n.l, *Supra*, ¶30,205 at 31,381. The presumption of full inclusion appears at 18 CFR 271.1102(c)(1) (1983):

Existing tax recovery under existing intrastate and intrastate rollover contracts. Except as provided in paragraph (c)(2) of this section, the maximum lawful prices for first sales of natural gas subject to Subparts E and F of this part (relating to first sales under existing intrastate contracts and intrastate rollover contracts) are presumed to recover all State severance taxes borne by the seller, and attributable to the production of such natural gas, that were imposed by State law enacted on or before November 9, 1978.

[17] *See*, Order No. 94–B, n. 12, *supra*, 48 FR 5,196.

[18] *Id.* at 5,193.

[19] There were differences concerning the effective date for allowances and nature of the allowances for sales of gas subject to sections 105 and 106(b) as compared to sales of gas subject to other pricing sections.

[20] *See*, 18 CFR 270.205(b)(2). As a result of this revision, a seller of gas subject to section 105(b)(1) who collects a production-related cost adjustment in addition to the section 102 new gas price would not be in violation of the Commission's ceiling price regulations (§ 271.502(a)).

presumed that the price under the terms of the contract or the contract price of gas sold subject to section 105 or 106(b) fully compensates sellers for all State severance taxes, should not be put into effect.[21]

Upon reconsideration of Order No. 108, the Commission is changing its position concerning the presumption of full recovery of State severance taxes for the same policy considerations that caused it to abandon its preclusion of sellers of gas under section 105 and 106(d) from recovering an allowance under section 110(a)(2) for production-related costs.

First, application of the presumption of full recovery is inconsistent with the Commission's changed view that the Commission should give greater emphasis to the NGPA objective of eliminating pricing disparities between the intrastate and interstate markets and fostering a national market for gas. The Commission believes that it should afford sellers of gas under section 105 or 106(b) the same opportunities as other sellers to collect allowances for State severance taxes under section 110(a)(1). Elimination of the presumption of full recovery would assist in minimizing unnecessary distinctions between the intrastate and interstate markets without significantly eroding the NGPA objective of limiting the escalation of prices for gas subject to existing intrastate contracts.

Second, the Commission finds no statutory intent in sections 105, 106(b), or 110 [22] to prevent a seller of gas subject to section 105 or 106(b) from collecting an allowance for State severance taxes which the Commission affords to sellers of gas under other pricing sections. Rescission of the presumption of full recovery is a function of the Commission's discretion under section 110(a)(1) as explained in the legislative history of that section.[23] The addition of an allowance for State severance taxes under section 110(a)(1) by sellers of gas under section 105 or 106(b) is not inconsistent with the statute.

As a consequence of the Commission's decision to permit continued allowances for State severance taxes for sales under sections 105 or 106(b), the Commission agrees with those petitioners who argue that the Commission no longer has any reason to inquire into the composition of ceiling prices under sections 105 or 106(b) to ascertain if taxes are already being recovered by collection of the ceiling price or if the total proceeds of the sale are sufficiently high to compensate for State severance taxes. The Commission, therefore, believes that the cost constituents of the sections 105 or 106(b) maximum lawful price are now irrelevant for purposes of determining eligibility to collect State severance tax allowances under section 110(a)(1).

Because of the way the Commission is applying section 110(a)(1), the Commission believes that it is no longer appropriate to consider the section 105 or 106(b) ceiling rates as providing for the reimbursement for State severance taxes intended to be recovered by a section 110(a)(1) allowance. Therefore; as a result of the Commission's definition of the maximum lawful price in its ceiling price regulations, collection of State severance tax allowances, if in compliance with section 110(a)(1), in addition to the otherwise applicable section 105 or 106(b) maximum lawful price, will not be considered to result in a double recovery of taxes.

Because the presumption of full recovery in Order No. 108 is no longer appropriate, the Commission is rescinding § 271.1102(c) and is making a conforming technical revision to § 271.1102(a) eliminating reference to subparagraph (c).[24] Because collection of an allowance under section 110(a)(1) does not result in a violation of the otherwise applicable maximum lawful price, this order revises the second sentence of § 270.205(b)(2) with respect to section 105(b)(1) sellers. The revision provides that collection of an allowance for State severance taxes, like allowances for production-related costs, shall not be considered to be in excess of the section 102 price for new natural gas for section 105(b)(1) sellers.

C. Contractual Authorization

One petitioner sought clarification that redetermination provisions, definite and indefinite price escalator clauses, and specific tax clauses constitute contractual authority to collect section 110(a)(1) allowances for State severance taxes for sales of gas under sections 105 or 106(b).

The Commission agrees with petitioners who would have the Commission permit sellers of gas subject to section 105 or 106(b) to collect an allowance in excess of the otherwise applicable maximum lawful prices for State severance taxes if collections are contractually authorized. The Commission is aware of the great diversity of contractual provisions in use in the pre-NGPA intrastate market and which remain in force. As a policy matter, however, the Commission is concerned that the establishment of definitions of contractual authority for purposes of section 110(a)(1), as some petitioners have suggested, is inappropriate. Such action could unsettle past tax collections and could interfere with on-going reimbursement practices based on private contractual relationships and contract interpretations.

In order to avoid the disruptive consequences which could follow from definitions of contractual authorization, the Commission leaves issues respecting intrastate contract interpretation to the parties or the courts to resolve. This approach is administratively desirable because it prevents the Commission from becoming an arbiter of private contractual disputes and is consistent with the Commission's treatment of such matters under Order No. 94–D.[25] Therefore, the Commission's rules implementing section 110(a)(1) in the case of sales under section 105 or 106(b) do not prescribe any specific wording requirements for the seller to meet before he may collect an allowance for State severance taxes. All that is required is that the parties agree that the contract authorized the amount of State severance taxes to be collected.[26]

The Commission recognizes, in response to petitions, that as a consequence of rescinding the presumption of full recovery of State severance taxes, parties to the contract should be able to amend their contract if they conclude that an amendment is necessary to authorize collection of State severance taxes under section 110. This order, therefore, revises § 270.205(c) to reflect the Commission's policy that the parties may prospectively amend an intrastate existing, successor, or rollover contract to collect an

[21] Gas distributors argue that Order No. 108 should be retained and should be made retroactively effective December 1, 1978 because that is the date the NGPA became effective. As the Commission no longer accepts the policy basis of Order No. 108 and is therefore rescinding the presumption of full recovery of State severance taxes, the petition that Order No. 108 should be made retroactive must be denied.

[22] *See*, Order No. 94–B, n.12, *supra*, 48 FR at 5,193.

[23] *See*, n. 7, *supra*.

[24] The rescission of Order No. 108 was suggested in the Joint Application for Rehearing of Order No. 108 of Damson Oil Corp., Natural Resources Corp., Pelto Oil Co., and Samson Resources Co., filed December 15, 1980. *See* Application for Rehearing at 14. Section 271.1102(c)(2) would permit recovery of allowances for increased State severance taxes. Paragraph (c)(2) is no longer needed as this order permits continued collection of all necessary taxes under section 110, including those resulting from an increase in tax rate or increase in the price of gas.

[25] *See*, Order No. 94–D, n.12, *supra*, 48 FR at 24,056.

[26] NGPA Section 101(b)(9) establishes the general requirement of contractual authorization for collection of proceeds under Title I.

allowance to recover State severance taxes for deliveries made on or after the effective date of this order.

This order does not permit retroactively effective contract amendments consistent with Opinion No. 135.[27] In concluding that contract amendments should operate prospectively, the Commission believes that public policy considerations generally mitigate against giving retroactive effect to contract amendments.[28] In Order No. 94-B, the Commission incorporated the general policy consideration against retroactively effective contract amendments by precluding the collection of a section 110 production-related cost allowance for a period of time in which the contract did not authorize collection of such an amount. Retroactively effective contract amendments would be unfair to purchasers who would have no expectation that they would be held liable for costs related to past production-related services. Similarly, in order to avoid unfairness and inequity to purchasers who could otherwise be billed for State severance taxes relating to deliveries before the effective date of this order, the Commission is making the revision to § 270.205(c) effective for deliveries on or after the effective date of this order.

D. Definitions of "contract price" and "price under the terms of the contract" (§ 271.504)

Section 271.504 defines "contract price" and "price under the terms of the contract" for purposes of determining the maximum lawful price under section 105. As used in Order Nos. 68, 68-A, and 108, "price" means the total amounts paid by the purchaser to obtain the gas. The "price" under a section 105 contract has meaning in connection with the total proceeds of the sale. The total proceeds of the sale includes payments labeled as "price", "production-related cost allowances," and "State severance tax allowances." Order No. 108 clarified that the definitions of "price" when used in the context of both "contract price" and "price under the terms of the existing contract" expressly mean all monies paid by the purchaser including those that are earmarked as reimbursements for State severance taxes.

Several petitioners expressed confusion whether the above definitions were intended to embody the presumption of full compensation for State severance taxes in the ceiling price. As a result some sellers may not have collected section 110(a)(1) allowances on the assumption that § 271.504 embodied a generic finding that such allowances were not "necessary"—a prerequisite to collection expressed in § 271.1102(a). As stated in Order No. 108, the purpose of the definitions was merely to establish that the "total proceeds" of the sale is the yardstick for establishing the "contract price" or "price under the terms of the existing contract" for purposes of sections 105(b)(1)(A) and 105(b)(2)(A)(i).[29] These definitions are used to determine whether a specific sale is within section 105(b)(1) or 105(b)(2) and what the section 105(b)(1) or (b)(2) ceiling price is once that threshold determination has been made.[30] These definitions never embodied any presumption of tax recovery which was, instead, intended to be codified at § 271.1102(c) for the first time.

In addition, in Order No. 108, the Commission addressed the issue of whether section 110 has already automatically raised each ceiling price by the amount of State severance taxes on the sale rather than operating as an add-on provision. The Commission in Order No. 108 rejected this argument, and we uphold that decision here. Thus, for example, in applying section 105 to a given month's deliveries of gas, the reference to the "section 102" ceiling rate in section 105(b)(1)(B) and 105(b)(2)(A) is meant to refer to the dollar amounts listed in Table I of § 271.101(a).

E. Effect of This Order on Rehearing and Effective Date

The Commission stayed Order No. 108 to avoid disruption of State severance tax collections pending reconsideration of Order No. 108. Before Order No. 108 was issued, first sellers of gas under section 105 or 106(b) may have collected State severance tax allowances under their interpretation of § 271.1102(a). On its face § 271.1102(a) does not preclude the collection of necessary State severance taxes by first sellers of natural gas under any NGPA pricing section. Others may have interpreted the interim rules, particularly §§ 270.205 and 271.504, so as to preclude collection of State severance tax allowances. Because of an absence of Commission guidance until Order No. 108 and because many first sellers relied on the interim NGPA regulations as authorization to collect allowances for State severance taxes under section 110 for deliveries made before January 1, 1981, the Commission in Order No. 108 ratified all such contractually authorized collections and did not require a refund of State severance tax allowances in excess of section 105 or 106(b) ceiling rates that were paid before January 1, 1981.

In issuing the stay, the Commission did not wish to disrupt continued tax collections under interim § 271.1102(a) for deliveries of gas on or after January 1, 1981 provided that such continued collections were made subject to refund. Collections were permitted subject to refund in the event that the Commission implemented the presumption of recovery in Order No. 108 on rehearing. Because the Commission is granting in part rehearing of Order No. 108, the Commission is not issuing § 271.1102(c), which would have had the effect of disallowing section 110(a)(1) allowances for section 105 or 106(b) sellers. The Commission will, therefore, dissolve the stay and rescind the refund and passthrough conditions of the stay order 30 days after publication in the **Federal Register**. As a result of eliminating the refund condition, first sellers will be able to retain amounts collected for State severance taxes from January 1, 1981, through the effective date of this order.

As a result of this order on rehearing, those first sellers of gas under section 105 or 106(b) who have been collecting contractually authorized State severance taxes under § 271.1102(a) for deliveries made on or after January 1, 1981, subject to the refund condition of the stay, may continue to collect such taxes subject to refund until the refund condition is dissolved 30 days after publication of this order.[31] Thirty days after publication in the **Federal Register**, those first sellers of gas subject to section 105 or 106(b) who have not been collecting an allowance for State severance taxes may begin collections, without any refund obligation, under § 271.1102(a) if the contract in effect on the date of the delivery authorizes collection. This order permits parties to amend contracts to authorize collections of State severance taxes prospectively

[27] Opinion No. 135, Opinion and Order Remanding for Limited Purposes, Docket No. CP80-24 (issued Dec. 11, 1981) 17 FERC ¶ 61,231, cited in Order No. 94-B, 48 FR 5,195 (May 31, 1983), Order No. 94-D, 48 FR 24,059 (May 31, 1983).

[28] Opinion No. 135 at 61,453.

[29] Order No. 108, n. 1, *supra*, FERC Stats. and Regs. Preambles ¶ 30,205 at 31,383. (1977-81).

[30] 18 CFR § 271.502 (a) and (b) (1983) defines maximum lawful price for purposes of section 105. *See also* 18 CFR § 271.602(a) for regulations defining the maximum lawful price for instrastate rollover contracts.

[31] This order affirms the action of the Commission in Order No. 108 ratifying contractually authorized collections of allowances for State severance taxes for deliveries made prior to January 1, 1981.

for deliveries made on or after the effective date of this order.

For the same policy reasons that the Commission is precluding retroactively effective contract amendments, the Commission is also precluding retroactive collections by first sellers who did not collect an allowance for State severance taxes before the effective date of this order, even though their contracts in effect at the time of the delivery may have authorized collections. By precluding retroactive collections, the Commission will avoid the unfairness and inequity of subjecting some purchasers to potentially large reimbursement claims for past deliveries.

IV. Conclusion and Summary

The Petitions for Rehearing are granted to the extent discussed above. Petitions for Rehearing arguing for retention of § 271.1102(c) are denied and that provision is being rescinded. Prospectively, from the effective date of this order, contractually authorized collections for State severance taxes are permitted for sales of gas subject to Subparts E and F.

This order provides, effective 30 days after publication in the **Federal Register**, that sellers of gas sold subject to sections 105 and 106(b) may continue to collect, without refund obligation, contractually authorized allowances for State severance taxes and increases in such taxes under existing § 271.1102(a) without violating the otherwise applicable maximum lawful price. The order also amends § 270.205(b)(2) to provide a reference to State severance taxes in order to clarify that contracts covering sales under section 105(b)(1)(b) may operate to authorize the collection of section 110 allowances for State severance taxes; and provides that parties may prospectively modify contracts to add an allowance for State severance taxes for deliveries made on or after the effective date of this order (§ 270.205(c)). Effective 30 days after publication in the **Federal Register**, this order also dissolves the stay of Order No. 108 and the refund and pass-through conditions of the stay. As a result, first sellers who have been collecting contractually authorized State severance tax allowances subject to refund may retain those monies after the 30 day publication period expires without a refund obligation.

For the foregoing reasons, the Commission orders that:

(1) Except as to the Application for Rehearing of Mobile Gas Service Corp. and Clarke-Mobile Counties Gas District, Alabama, which is denied, the Petitions and Applications for Rehearing of Order No. 108 are hereby granted to the extent consistent with the preceding discussion;

(2) To the extent any application for rehearing has not been specifically granted, it is denied;

(3) Effective 30 days after publication of this order in the **Federal Register**, the Commission's Order, issued December 24, 1980, Granting Temporary Conditional Stay of the effective date (January 1, 1981) of § 271.504 (a) and (b) and § 271.1102(c) and Granting Rehearing of Order No. 108 for Purposes of Further Consideration is rescinded (including the refund and pass-through conditions of the stay order), and the stay order is dissolved; and,

(4) For the reasons stated herein, the Commission amends 18 CFR 270.205(b)(2), 270.205(c) and 271.1102(a), and rescinds §§ 271.1102(c)(1) and 271.1102(c)(2).

(Natural Gas Policy Act of 1978, 15 U.S.C. §§ 3301–3432)

List of Subjects

18 CFR Part 270

Natural Gas, Wage and price controls.

18 CFR Part 271

Natural Gas, High-cost gas, Tight formations.

In consideration of the foregoing, Parts 270 and 271 of Title 18, Code of Federal Regulations, are amended as set forth below; all amendments are issued as final rules effective November 17, 1983.

By the Commission. Commissioner Hughes voted present.

Kenneth F. Plumb,

Secretary.

PART 270—[AMENDED]

1. Section 270.205 of Part 270 is amended by revising the last sentence of paragraph (b)(2) as follows:

§ 270.205 Contractual authorization to collect NGPA rates.

* * * * *

(b) *Existing intrastate contracts.* * * *

(2) * * * However, if a seller collects an adjustment for production-related costs or State severance taxes in accordance with Subpart K of Part 271, that amount shall not be considered to be in excess of the new natural gas price under section 102 of the NGPA.

* * * * *

2. Section 270.205 of Part 270 is further amended by revising paragraph (c) to read as follows:

* * * * *

(c) *Modification of contracts.* The NGPA does not prohibit the parties to a contract for the first sale of natural gas from amending or modifying such contract to permit the seller to charge and collect any applicable NGPA rate or an adjustment under Subpart K of Part 271 for production-related costs or State severance taxes. If natural gas sold under such contract is subject to section 105(b)(1) of the NGPA and qualifies for no higher maximum lawful price under any other provision of the NGPA, no amendment or modification of such contract may provide authorization for a seller to charge and collect a price which exceeds the price under the terms of the contract as in effect on November 9, 1978, except to the extent the amendment provides authorization to collect an adjustment for production-related costs or State severance taxes in accordance with Subpart K of Part 271.

* * * * *

3. Section 271.1102 is amended by removing paragraph (c) in its entirety and by revising paragraph (a) as follows:

§ 271.1102 State severance taxes.

(a) Except as provided in paragraph (b) of this section, the price for any first sale of natural gas shall not be considered to have exceeded the maximum lawful price applicable to that sale as set forth in this part if such first sale price exceeds the maximum lawful price to the extent necessary to recover State severance taxes borne by the seller.

* * * * *

(Natural Gas Policy Act of 1978, 15 U.S.C. 3301.3432)

[FR Doc. 83–28329 Filed 10–17–83; 8:45 am]

BILLING CODE 6717–01–M

DEPARTMENT OF HEALTH AND HUMAN SERVICES

Food and Drug Administration

21 CFR Part 175

[Docket No. 82F–0046]

Indirect Food Additives: Adhesive Coatings and Components

Correction

In FR Doc. 83–26337 appearing on page 44203 in the issue of Wednesday, September 28, 1983, make the following corrections.

In the first column, under **FOR FURTHER INFORMATION CONTACT**, the Area Code now reading "020" should read "202"; in the second column, in the paragraph under the Part heading,

seventh line, remove the phrase "amended in § 175 is".

BILLING CODE 1505-01-M

21 CFR Part 520

Thiabendazole With Trichlorfon; Change of Sponsor

AGENCY: Food and Drug Administration.

ACTION: Final rule.

SUMMARY: The Food and Drug Administration (FDA) is amending the animal drug regulations to reflect approval of a supplemental new animal drug application (NADA), providing for a sponsor change from Merck & Co. to Farnam Cos. The NADA provides for oral use of thiabendazole with trichlorfon to control and treat infestations of certain parasites in horses.

EFFECTIVE DATE: October 18, 1983.

FOR FURTHER INFORMATION CONTACT: David L. Gordon, Bureau of Veterinary Medicine (HFV-238), Food and Drug Administration, 5600 Fishers Lane, Rockville, MD 20857, 301-443-6243.

SUPPLEMENTARY INFORMATION: Farnam Cos., Inc., 2230 East Magnolia, P.O. Box 21447, Phoenix, AZ 85036, filed supplemental NADA 91-067 providing for a change of sponsor from Merck & Co. Merck & Co. has confirmed the change of sponsor. The NADA provides for use of thiabendazole with trichlorfon to control and treat infestations of certain parasites in horses. FDA amends the regulations to reflect the change of sponsor.

This action concerns a change of sponsor and does not involve any changes in manufacturing facilities, equipment, procedures, or production personnel. Under the Bureau of Veterinary Medicine's supplemental approval policy (42 FR 64367; December 23, 1977), this change does not require reevaluation of the safety and effectiveness data in the parent application.

The Bureau of Veterinary Medicine has determined pursuant to 21 CFR 25.24(d)(1) proposed December 11, 1979; 44 FR 71742) that this action is of a type that does not individually or cumulatively have a significant impact on the human environment. Therefore, neither an environmental assessment nor an environmental impact statement is required.

List of Subjects in 21 CFR Part 520

Animal drugs, oral.

PART 520—ORAL DOSAGE FORM NEW ANIMAL DRUGS NOT SUBJECT TO CERTIFICATION

§ 520.2380e [Amended]

Therefore, under the Federal Food, Drug, and Cosmetic Act (sec. 512(i), 82 Stat. 347 (21 U.S.C. 360b(i))) and under authority delegated to the Commissioner of Food and Drugs (21 CFR 5.10) and redelegated to the Bureau of Veterinary Medicine (21 CFR 5.83), Part 520 is amended in § 520.2380e *Thiabendazole with trichlorfon* by removing from paragraph (b) the number "000006" and inserting in its place "017135".

Effective date. October 18, 1983.

(Sec. 512(i), 82 Stat. 347 (21 U.S.C. 360b(i)))

Dated: October 7, 1983.

Max L. Crandall,

Associate Director for Surveillance and Compliance.

[FR Doc. 83-28293 Filed 10-17-83; 8:45 am]

BILLING CODE 4160-01-M

21 CFR Part 522

Implantation or Injectable Dosage Form New Animal Drugs Not Subject to Certification; Azaperone

AGENCY: Food and Drug Administration.

ACTION: Final rule.

SUMMARY: The Food and Drug Administration (FDA) is amending the animal drug regulations to reflect approval of a new animal drug application (NADA) filed by Pitman-Moore, Inc., providing for safe and effective use of azaperone injection as a tranquilizer for swine weighing up to 80 pounds.

EFFECTIVE DATE: October 18, 1983.

FOR FURTHER INFORMATION CONTACT: Charles E. Haines, Bureau of Veterinary Medicine (HFV-133), Food and Drug Administration, 5600 Fishers Lane, Rockville, MD 20857, 301-443-3410.

SUPPLEMENTARY INFORMATION: Pitman-Moore, Inc., Washington Crossing, NJ 08510, filed NADA 115-732 which provides for deep intramuscular use of Stresnil (azaperone) Injection for control of aggressiveness in swine when mixing or regrouping weanling or feeder pigs weighing up to 80 pounds. The NADA is approved and the regulations are amended to reflect the approval. The basis of approval is discussed in the freedom of information (FOI) summary.

In accordance with the freedom of information provisions of Part 20 (21 CFR Part 20) and § 514.11(e)(2)(ii) (21 CFR 514.11(e)(2)(ii)), a summary of safety and effectiveness data and information submitted to support approval of this application may be seen in the Dockets Management Branch (HFA-305), Food and Drug Administration, Rm. 4-62, 5600 Fishers Lane, Rockville, MD 20857, from 9 a.m. to 4 p.m., Monday through Friday.

The Bureau of Veterinary Medicine has carefully considered the potential environmental effects of this action and has concluded that the action will not have a significant impact on the human environment and that an environmental impact statement therefore will not be prepared. The Bureau's finding of no significant impact and the evidence supporting this finding, contained in a statement of exemption (pursuant to 21 CFR 25.1(j)) may be seen in the Dockets Management Branch (address above).

List of Subjects in 21 CFR Part 522

Animal drugs, injectable.

PART 522—IMPLANTATION OR INJECTABLE DOSAGE FORM NEW ANIMAL DRUGS NOT SUBJECT TO CERTIFICATION

Therefore, under the Federal Food, Drug, and Cosmetic Act (sec. 512(i), 82 Stat. 347 (21 U.S.C. 360b(i))) and under authority delegated to the Commissioner of Food and Drugs (21 CFR 5.10) and redelegated to the Bureau of Veterinary Medicine (21 CFR 5.83), Part 522 is amended by adding new § 522.150 to read as follows:

§ 522.150 Azaperone injection.

(a) *Specifications.* Each milliliter of sterile aqueous solution contains 40 milligrams of azaperone.

(b) *Sponsor.* See No. 011716 in § 510.600(c) of this chapter.

(c) *Conditions of use.*—(1) *Indications for use.* Control of aggressiveness when mixing or regrouping weanling or feeder pigs weighing up to 80 pounds.

(2) *Dosage.* 2.2 milligrams per kilogram (1 milligram per pound).

(3) *Limitations.* Inject by deep intramuscular injection. Federal law restricts this drug to use by or on the order of a licensed veterinarian.

Effective date. October 18, 1983.

(Sec. 512(i), 82 Stat. 347 (21 U.S.C. 360b(i))).

Dated: October 11, 1983.

Lester M. Crawford,

Director, Bureau of Veterinary Medicine.

[FR Doc. 83-28292 Filed 10-17-83; 8:45 am]

BILLING CODE 4160-01-M

DEPARTMENT OF JUSTICE

Parole Commission

28 CFR Part 2

Paroling, Recommitting, and Supervising Federal Prisoners; Paroling Policy Guidelines

Correction

In FR Doc. 83-26156 beginning on page 44529, in the issue of Thursday, September 29, 1983, make the following corrections:

1. On page 44530, the first column, under "617 *Failure to Appear* *", in paragraph (a), the fourth line, "(i) 6" should read "(i) ≦ 6".

2. In the same column, under "618 *Contempt of Court*", the third line, the phrase "add 6 months" should read "add ≦ 6 months".

BILLING CODE 1505-01-M

DEPARTMENT OF TRANSPORTATION

Coast Guard

33 CFR Part 163

[CGD 83-027]

Towing of Barges; Towing Hawser Length Requirements

AGENCY: Coast Guard, DOT.

ACTION: Final rule.

SUMMARY: This final rule eliminates the towing hawser length requirements for vessels navigating the harbors, rivers, and inland waters of the United States. The equipment, methods, and practices involving the towing of vessels have changed considerably since the regulation was originally promulgated. A simple limitation of towing hawser length is no longer appropriate. This rule will allow masters of towing vessels to use their discretion when determining the length of towing hawsers suitable to the situation.

EFFECTIVE DATE: November 17, 1983.

FOR FURTHER INFORMATION CONTACT: Captain E. E. Moran, Project Manager, Waterways Management Division, Office of Marine Environment and Systems (G-WWM), U.S. Coast Guard Headquarters, 2100 2nd St SW., Washington D.C. 20593, (202) 426-4958.

SUPPLEMENTARY INFORMATION: A notice of proposed rulemaking to consider deleting the Towing Hawser Length Requirement was published on July 7, 1983 (48 FR 31258). Comments were invited for a period of 45 days ending August 22, 1983. The only comment received supported the project.

Drafting Information

The principal persons involved in drafting this rulemaking are Captain E. E. Moran, Project Manager, Office of Marine Environment and Systems, and Lieutenant Mark Hanlon, Project Counsel, Office of Chief Counsel.

Discussion of the Regulation

The Coast Guard is deleting the requirements of 33 CFR 163.10 which limited the length of hawsers between vessels towing on the inland waters of the United States. The hawser length regulations were originally issued by the Marine Inspection Board of the Department of Commerce in 1909, and limited hawser length between towing vessels and their tows to no more than 450 feet (75 fathoms).

The Coast Guard believes that with the scope and complexity of modern towing operations, under some circumstances, compliance with this regulation may result in safety hazards rather than benefits. The deletion of this regulation, in consideration of modern equipment and techniques, will not create substantially greater risks for other marine traffic.

Evaluation

This regulation has been reviewed under the provisions of Executive Order 12291 and has been determined to be nonmajor. In addition, this regulation is considered to be nonsignificant in accordance with the guidelines set out in the Policies and Procedures for Simplification, Analysis, and Review of Regulations (DOT Order 2100.5 of 5-22-80).

A further economic evaluation has not been prepared since the impact of this regulation is expected to be minimal. This regulation deleted existing requirements which limit towing hawser length between towboats and their tows to not more than 450 feet (75 fathoms). No additional costs are associated with the removal of these regulations since no new equipment would be required. Some slight benefits may accrue by eliminating the requirement for an operation, hauling in a portion of the hawser, that would not otherwise be performed.

In accordance with Section 605(b) of the Regulatory Flexibility Act (94 Stat. 1164), it is also certified that this rule will not have a significant economic impact upon a substantial number of small entities.

List of Subjects in 33 CFR Part 163

Harbors, Navigation (water), Waterways.

PART 163—[AMENDED]

Part 163 reads as follows:

1. The authority citation for Part 163 reads as follows:

Authority: 33 U.S.C. 180, 30 Stat. 90; 49 CFR 1.46(c)(2); 28 Stat. 647, 33 U.S.C. 258; 49 CFR 1.46(c)(3); sec. 4233 R.S., 33 U.S.C. 322.

§ 163.10 [Removed]

2. By removing § 163.10.

Dated: September 8, 1983.

B. F. Hollingsworth,

Rear Admiral, U.S. Coast Guard, Chief, Office of Marine Environment and Systems.

[FR Doc. 83-28265 Filed 10-17-83; 8:45 am]

BILLING CODE 4910-14-M

POSTAL SERVICE

39 CFR Part 447

Code of Ethical Conduct for Postal Employees; Conflict of Interest-Employment; Advisory Service; Political Activities; Statutory Provisions

AGENCY: Postal Service.

ACTION: Final rule.

SUMMARY: By this final rule, the Postal Service makes minor technical amendments to its ethical conduct regulations to bring them into conformity with the Civil Service Reform Act of 1978. References to the former Civil Service Commission are deleted, references to 5 CFR Part 733 are updated, and references to statutes which have been repealed are deleted.

EFFECTIVE DATE: November 17, 1983.

FOR FURTHER INFORMATION CONTACT: Mr. Charles D. Hawley, (202) 245-4584.

SUPPLEMENTARY INFORMATION: The Civil Service Reform Act of 1978 established the Office of Personnel Management and transferred to it certain functions vested by statute in the United States Civil Service Commission. The Act also designated the Merit Systems Protection Board to perform certain adjudicatory and enforcement functions previously performed by the Commission and transferred certain investigatory functions to the Special Counsel. Accordingly, this rule amends 39 CFR Part 447 by replacing all references to the Civil Service Commission with the appropriate references to the Office of Personnel Management or the Office of Special Counsel, Merit Systems Protection Board. Minor conforming changes made necessary on account of renumbered or obsolete sections of 5 CFR Part 733 and other minor technical corrections are also made.

Two statutes appearing in the section which lists the statutes and regulations applicable to postal employees have been repealed. Section 608 of Title 18, United States Code, which related to limitations on political contributions and purchases, was repealed by the Federal Election Campaign Act of 1971, as amended, Pub. L. 94–283, section 201(a), 90 Stat. 496 (1976). Section 1727 of Title 18, United States Code, which provided for a fine of not more than $50 for postage accounting violations, was repealed by the Act of July 5, 1968, Pub. L. 90–384, section 1(a), 82 Stat. 292, so as to permit prosecution under the postal embezzlement statute, 18 U.S.C. 1711. Accordingly, references to the two repealed statutes are deleted, and the remaining statutes are appropriately relettered.

Although 39 U.S.C. 410(a) exempts the Postal Service from the notice and comment requirements of the Administrative Procedure Act regarding proposed rule making (5 U.S.C. 553), the Postal Service ordinarily invites public comment on proposed changes to its regulations. Since, however, this rule makes no substantive change in the regulations, notice and an opportunity for the submission of comments in this case are deemed unnecessary.

Accordingly, 39 CFR Part 447 is amended as follows:

List of Subjects in 39 CFR Part 447

Conflict of interests, Government employees.

PART 447—CODE OF ETHICAL CONDUCT FOR POSTAL EMPLOYEES

§ 447.23 [Amended]

§ 447.51 [Amended]

1. In paragraph (j) of § 447.23 and paragraph (a) of § 447.51 remove "the Civil Service Commission" and insert in lieu thereof "the Office of Personnel Management".

§ 447.31 [Amended]

2. In § 447.31 remove from paragraph (a) "the U.S. Civil Service Commission" and insert in lieu thereof "the Office of Personnel Management".

3. Section 447.53 is revised to read as follows:

§ 447.53 Investigation and enforcement.

The Office of the Special Counsel and the Merit Systems Protection Board investigate and adjudicate allegations of political activity in violation of the regulations of the Office of Personnel Management by Postal Service employees. For jurisdiction in such a case, see 5 CFR 733.301 and Parts 1250–1254.

§ 447.62 [Amended]

4. In paragraph (d) and paragraph (e) of § 447.62 remove "PES–25" and insert in lieu thereof "EAS–25".

§ 447.91 [Amended]

5. In § 447.91, amend paragraph (b) by removing "607, and 608" and inserting in lieu thereof "and 607"; remove paragraph (z); redesignate paragraphs (aa) through (jj) as paragraphs (z) through (ii); amend redesignated paragraph (hh) by removing "first-class mail" and inserting in lieu thereof "First-Class Mail".

(39 U.S.C. 401)

W. Allen Sanders,

Associate General Counsel, Office of General Law and Administration.

[FR Doc. 83–28276 Filed 10–17–83; 8:45 am]

BILLING CODE 7710–12–M

---

39 CFR Part 447

Code of Ethical Conduct for Postal Employees; Standards of Conduct; Definitions

AGENCY: Postal Service.

ACTION: Final rule.

SUMMARY: The Postal Service adopts, without change, its proposal to amend its regulations relating to the acceptance of gifts of nominal value by postal employees. These amendments eliminate the specific dollar limit by which "nominal" value or amount was previously defined.

EFFECTIVE DATE: November 17, 1983.

FOR FURTHER INFORMATION CONTACT: Mr. Charles D. Hawley, (202) 245–4584.

SUPPLEMENTARY INFORMATION: On May 12, 1983, the Postal Service published in the **Federal Register**, 48 FR 21343, a notice of proposed rulemaking to amend in various respects its Code of Ethical Conduct for Postal Employees. The Postal Service has received no comments with regard to any of the proposed amendments. It has been decided to adopt at this time only those amendments which relate to the restrictions on the acceptance of gifts by employees and which define "nominal value." The current regulations permit an employee to accept unsolicited advertising or promotional items of nominal value and define "nominal value" with respect to gifts as an item having a retail value of not more than $2.00. With respect to food and refreshment, "nominal value" is currently defined as an amount not in excess of what an employee would ordinarily spend if he were paying his own bill. Because the two-dollar figure is today unrealistically low even for items of little economic worth and because it is considered that any fixed dollar figure is likely to be rendered obsolete with the passage of time, it has been decided to eliminate the reference to the $2.00 figure in the provision permitting acceptance of gifts of nominal value and to eliminate entirely the provision which defines "nominal value." Under the amendments hereby adopted, the definition of "nominal value" will be left to the common understanding of that term, taking into account the circumstances of the particular case, reasonable social conventions, and the dictates of sound judgment.

The remaining proposed rules published on May 12, 1983, are still under consideration at this time.

Accordingly, 39 CFR Part 447 is hereby amended as follows:

List of Subjects in 39 CFR Part 447

Conflict of interests, Government employees, Administrative practice and procedure, Postal Service.

PART 447—CODE OF ETHICAL CONDUCT FOR POSTAL EMPLOYEES

1. In § 447.24, paragraph (b)(2) is revised to read as follows:

§ 447.24 Conflicts of interest—gifts, entertainment, and favors.

* * * * *

(b) * * *

(2) Accept unsolicited advertising and promotional items, such as a pen, pencil, note pad, or calendar of nominal value;

§ 447.81 [Removed]

2. In § 447.81, paragraph (h) is removed and paragraphs (i) and (j) are redesignated (h) and (i) respectively.

(39 U.S.C. 401)

W. Allen Sanders,

Associate General Counsel, Office of General Law and Administration.

[FR Doc. 83–28275 Filed 10–17–83; 8:45 am]

BILLING CODE 7710–12–M

GENERAL SERVICES ADMINISTRATION

41 CFR Part 101–25

[FPMR Amdt. E–254]

Travel Promotional Material

AGENCY: Office of Federal Supply and Services, GSA.

ACTION: Final rule.

SUMMARY: This regulation incorporates and codifies existing policies regarding promotional materials (e.g., bonus

flights, reduced-fare coupons, cash, merchandise, gifts, credits toward future free or reduced costs of services or goods, etc.) received by employees in connection with official travel and based on the purchase of a ticket or other services (e.g. car rental). These promotional materials are properly considered to be due the Government and may not be retained by the employee (see Comp. Gen. Decision B-199656, July 15, 1981). This regulation requires that when an employee receives promotional material, the employee shall accept the material on behalf of the United States and relinquish it to an appropriate agency official. The regulation provides guidelines for the disposition of promotional material and cash compensation.

EFFECTIVE DATE: October 18, 1983.

FOR FURTHER INFORMATION CONTACT: Richard Sturdy, Policy Development and Analysis Division, Office of Transportation (703-557-1256).

SUPPLEMENTARY INFORMATION: The General Services Administration has determined this is not a major rule for the purposes of Executive Order 12291 of February 17, 1981. Accordingly a regulatory impact analysis is not required. Because the amendments made by this rule incorporate and codify existing policies and do not make substantive changes, the General Services Administration finds that a general notice of proposed rulemaking and public procedure thereon, and a delayed effective date are unnecessary. Because no notice of proposed rulemaking is required, this rule is not subject to the provisions of the Regulatory Flexibility Act (5 U.S.C. 6001 et seq.).

List of Subjects in 41 CFR Part 101-25

Energy conservation, Government property management, Reporting and recordkeeping requirements.

PART 101-25—[AMENDED]

1. The table of contents for Part 101-25 is amended by revising and adding the following entries:

Sec.
101-25.103 Promotional materials, trading stamps, or bonus goods.
101-25.103-1 General.
101-25.103-2 Promotional material received in conjunction with official travel from transportation companies, rental car companies, or other commercial activities.
101-25.103-3 Trading stamps or bonus goods received from contractors.
101-25.103-4 Disposition of promotional materials, trading stamps, or bonus goods.

2. Section 101-25.103 is revised and §§ 101-25.103-1 through 101-25.103-4 are added as follows:

§ 101-25.103 Promotional materials, trading stamps, or bonus goods.

§ 101-25.103-1 General.

Federal agencies in a position to receive promotional materials, trading stamps, or bonus goods shall establish internal procedures for the receipt and disposition of these gratuities in accordance with § 101-25.103. The procedures shall provide for a minimum of administrative and accounting controls.

§ 101-25.103-2 Promotional material received in conjunction with official travel from transportation companies, rental car companies, or other commercial activities.

(a) All promotional materials (e.g., bonus flights, reduced-fare coupons, cash, merchandise, gifts, credits toward future free or reduced costs of services or goods, etc.) received by employees in conjunction with official travel and based on the purchase of a ticket or other services (e.g. car rental) are properly considered to be due the Government and may not be retained by the employee. The Comptroller General of the United States has stated that employees are obligated to account for any gift, gratuity, or benefit received from private sources incident to the performance of official duties (see Comp. Gen. Decision B-199656, July 15, 1981). When an employee receives promotional material, the employee shall accept the material on behalf of the United States and relinquish it to an appropriate agency official.

(b) Promotional coupons that provide for future free or reduced costs of services (travel) should be integrated into the agency travel plans to maximize the benefits to the Government. The coupons should then be applied to the maximum extent possible; e.g., coast-to-coast or overseas travel, if permitted.

(c) Promotional coupons that carry a cash surrender value shall be redeemed immediately. The cash received from redeemed coupons or other cash compensation (i.e., denied boarding or cancellation of reservation by carriers, etc.) shall be deposited in accordance with Department of Treasury requirements, and credited to miscellaneous receipt account 1699, "Miscellaneous Dividends and Earnings, Not Otherwise Classified."

(d) Promotional materials that cannot be used by the receiving agency shall be disposed of in accordance with § 101-25.103-4.

§ 101-25.103-3 Trading stamps or bonus goods received from contractors.

When contracts contain a price reduction clause, any method (such as trading stamps or bonus goods) by which the price of a commodity or service is effectively reduced shall constitute a price reduction. Temporary or promotional price reductions are to be made available to contracting officers under the same terms and conditions as to other customers. Procuring activities, however, rather than accept trading stamps and bonus goods, shall attempt to deduct the cost of such items from the contract price. If obtaining such a price reduction is not possible, the contracting officer shall document the contract file to that effect and dispose of the items as provided in § 101-25.103.4.

§ 101-25.103-4 Disposition of promotional materials, trading stamps, or bonus goods.

(a) Agencies shall, through the lowest appropriate activity, arrange for transfer of promotional materials, trading stamps, or bonus goods, without reimbursement in accordance with internal agency procedures to a nearby Federal hospital or similar institution operated, managed, or supervised by the Department of Defense (DOD) or the Veterans Administration (VA) when:

(1) The contract does not contain a price reduction clause, or

(2) The contractor refuses to grant a price reduction, and

(3) It is deemed practical and in the best interest of the Government to accept such promotional items as a price reduction, and

(4) The procuring or receiving agency has no practical use for the promotional items.

(b) Before transferring promotional materials, trading stamps, or bonus goods to the above Federal institutions, it must be determined that the proposed recipient is prepared to receive and use such items. If these items cannot be used by the receiving agency or a medical facility, they should be disposed of in accordance with 41 CFR 101-43, 44 and 45.

(Sec. 205(c), 63 Stat. 390 (40 U.S.C. 486(c)))

Dated: August 23, 1983.

Gerald P. Carmen,

Administrator of General Services.

[FR Doc. 83-28311 Filed 10-17-83; 8:45 am]

BILLING CODE 6820-AM-M

FEDERAL EMERGENCY MANAGEMENT AGENCY

[Docket No. FEMA-6564]

44 CFR Part 65

National Flood Insurance Program; Changes in Special flood Hazard Areas; Florida et al.

AGENCY: Federal Emergency Management Agency.

ACTION: Interim rule.

SUMMARY: This rule lists those communities where modification of the base (100-year) flood elevations is appropriate because of new scientific or technical data. New flood insurance premium rates will be calculated from the modified base (100-year) flood elevations for new buildings and their contents and for second layer insurance on existing buildings and their contents.

DATES: These modified elevations are currently in effect and amend the Flood Insurance Rate Map (FIRM) in effect prior to this determination. The effective dates appear in the sixth column of the table.

From the date of the second publication of notice of these changes in a prominent local newspaper, any person has ninety (90) days in which he can request through the community that the Associate Director, State and Local Programs and Support reconsider the changes. These modified elevations may be changed during the 90-day period.

ADDRESSES: The modified base (100-year) flood elevation determinations are available for inspection at the office of the Chief Executive Officer of the community, listed in the fifth column of the table.

Send comments to that address also.

FOR FURTHER INFORMATION CONTACT: Dr. Brian R. Mrazik, Chief, Engineering Branch, Natural Hazards Division, Federal Emergency Management Agency, Washington, D.C. 20472, (202) 287-0230.

SUPPLEMENTARY INFORMATION: The numerous changes made in the base (100-year) flood elevations on the Flood Insurance Rate Map(s) make it administratively infeasible to publish in this notice all of the modified base (100-year) flood elevations contained on the map. However, this rule includes the address of the Chief Executive Officer of the community where the modified base (100-year) flood elevation determinations are available for inspection.

Any request for reconsideration must be based on knowledge of changed conditions, or new scientific or technical data.

These modifications are made pursuant to Section 206 of the Flood Disaster Protection Act of 1973 (Pub. L. 93-234) and are in accordance with the National Flood Insurance Act of 1968, as amended, (Title XIII of the Housing and Urban Development Act of 1968 (Pub. L. 90-448), 42 U.S.C. 4001-4128, and 44 CFR Part 65.4.

For rating purposes, the revised community number is listed and must be used for all new policies and renewals.

These base (100-year) flood elevations are the basis for the flood plain management measures that the community is required to either adopt or show evidence of being already in effect in order to qualify or remain qualified for participation in the National Flood Insurance Program (NFIP).

These elevations, together with the flood plain management measures required by § 60.3 of the program regulations are the minimum that are required. They should not be construed to mean the community must change any existing ordinances that are more stringent in their flood plain management requirements. The community may at any time, enact stricter requirements on its own, or pursuant to policies established by other Federal, State or regional entities.

The changes in the base (100-year) flood elevations are in accordance with 44 CFR 65.4.

Pursuant to the provisions of 5 U.S.C. 605(b), the Associate Director, State and Local Programs and Support, to whom authority has been delegated by the Director, Federal Emergency Management Agency, hereby certifies that this rule if promulgated will not have a significant economic impact on a substantial number of small entities. This rule provides routine legal notice of technical amendments made to designated special flood hazard areas on the basis of updated information and imposes no new requirements or regulations on participating communities.

List of Subjects in 44 CFR Part 65

Flood insurance, Flood plains.

§ 65.4 [Amended]

State and County	Location	Date and name of newspaper where notice was published	Chief executive officer of community	Effective date of modified flood insurance rate map	New community No.
Florida:					
Broward County	City of Fort Lauderdale	*The Sun Sentinel*, Jan. 14, 1983 and Jan. 21, 1983.	Hon. Robert A. Dressler, Mayor of Fort Lauderdale, P.O. Box 14250, Fort Lauderdale, FL 33302.	Dec. 15, 1982	125105D
Orange County	City of Winter Park	*Orlando Sentinel*, Jan. 28, 1983 and Feb. 4, 1983.	Hon. Hope Strong, Jr., Mayor of Winter Park, City Hall, 401 Park Avenue, South Winter Park, FL 32789.	Feb. 4, 1983	120188C
Mississippi: Lowndes County	City of Columbus	*The Commercial Dispatch*, Oct. 29, 1982 and Nov. 5, 1982.	Hon. James M. Trotter, Mayor of Columbus, City Hall, P.O. Box 1408, Columbus, MS 39701.	Nov. 5, 1982	280108E
New Jersey: Morris County	Township of East Hanover	*Regional Weekly News*, Apr. 14, 1983 and Apr. 21, 1983.	Hon. Vincent Leo, Jr., Mayor of East Hanover, 411 Ridgedale Avenue, East Hanover, NJ 07936.	Apr. 1, 1983	340341B
New York:					
Onondaga County	Village of Manlius	*Eagle Bulletin*, Sept. 14, 1983 and Sept. 21, 1983.	Hon. Angelo A. Albanese, Mayor of Manlius, One Elmbrook Drive, West, Manlius, NY 13104.	Sept. 7, 1983	360977B
Westchester County	City of Rye	*Rye Chronicle*, Aug. 8, 1983 and Aug. 25, 1983.	Hon. Frederick J. Hunziker, Mayor of Rye, City Hall, Boston Post Road, Rye, NY 10580.	Aug. 11, 1983	360931D
Oklahoma: Oklahoma County	City of Edmond	*Edmond Sun*, July 29, 1983 and Aug. 5, 1983.	Hon. Carl F. Reherman, Mayor of Edmond, P.O. Box 1260, Edmond, OK 73034.	July 22, 1983	400252A
Oregon: Morrow County	City of Heppner	*Heppner Gazette Times*, Jan. 27, 1983 and Feb. 3, 1983.	Hon. Clifford Green, Mayor of Heppner, P.O. Box 756, Heppner, OR 97836.	Jan. 17, 1983	410175B
Texas:					
Dallas, Denton, Collin, Rockwall and Kaufman Counties.	City of Dallas	*Morning News*, July 8, 1983 and July 15, 1983.	Hon. Starke Taylor, Mayor of Dallas, City Hall, 1500 Marilla Street, Dallas, TX 75201.	July 1, 1983	480171C
Galveston County	City of League City	*League City News*, July 20, 1983 and July 27, 1983.	Hon. Joe Lamb, Mayor of League City, 300 West Walker, League City, TX 77573.	July 8, 1983	485488C

(National Flood Insurance Act of 1968 (Title XIII of Housing and Urban Development Act of 1968), effective January 28, 1969 (33 FR 17804, November 28, 1968), as amended; 42 U.S.C. 4001–4128; Executive Order 12127, 44 FR 19367; delegation of authority to Associate Director, State and Local Program and Support)

Issued: September 26, 1983.

Dave McLoughlin,

Deputy Associate Director, State and Local Programs and Support.

[FR Doc. 83-28122 Filed 10-17-83; 8:45 am]

BILLING CODE 6718-03-M

FEDERAL COMMUNICATIONS COMMISSION

47 CFR Parts 1 and 69

[CC Docket No. 78-72; Phase I]

MTS and WATS Market Structure; Waiver of Commission Rules

AGENCY: Federal Communications Commission.

ACTION: Waiver of Commission rules.

SUMMARY: The Chief of the Common Carrier Bureau, acting under delegated authority, grants in part the petition filed by Satellite Business Systems (SBS) seeking a waiver of the Commission's rule limiting to twenty-five pages the length of petitions for reconsideration of Commission decisions. SBS requested the waiver to permit parties to file petitions for reconsideration of the Commission's amended rules for computing access charges that were up to fifty pages in length. The amended rules were published on September 21, 1983 at 48 FR 42987. The waiver granted will permit parties to file petitions not exceeding thirty-five pages in length. The Chief of the Common Carrier Bureau concluded that this action was necessary because of the complexity and importance of the issues to be raised.

EFFECTIVE DATE: Waiver is effective October 12, 1983.

ADDRESS: Federal Communications Commission, 1919 M Street, NW., Washington, D.C.

FOR FURTHER INFORMATION CONTACT: Kathleen B. Levitz, Common Carrier Bureau, (202) 632-9342.

List of Subjects in 47 CFR Part 69

Access charges, Communication common carriers, Telephone.

Order

In the matter of MTS and WATS market structure, CC Docket No. 78-72, Phase I.

Adopted: October 7, 1983.

Released: October 12, 1983.

By the Chief, Common Carrier Bureau.

1. On August 22, 1983, this Commission released the *Memorandum Opinion and Order* [1] which modified the *Third Report and Order* [2] issued in this docket in response to petitions for reconsideration. On September 19, 1983, Satellite Business Systems (SBS) filed a motion for waiver of § 1.429(d) of the Commission's rules, 47 CFR 1.429(d). SBS requested that we authorize parties to file petitions for reconsideration of the August 22 *Order* that do not exceed fifty pages in length.

2. In support of its motion, SBS states that it will file a petition for reconsideration of the August 22 *Order* that will discuss complex, important issues. To present this discussion will require more than the twenty-five pages authorized by the Commission's rules.

3. Recognizing the complexity and importance of the issues addressed in the August 22 *Order* that may be the subjects of petitions for further reconsideration, we believe that some relaxation of the rule limiting the length of such petitions is appropriate. In a further reconsideration proceeding, however, the issues to be addressed should be fewer in number than those raised during the reconsideration proceeding. *See* 47 CFR § 1.429(i). For this reason, we conclude that the waiver SBS seeks is overly generous. We shall permit parties to file petitions that do not exceed thirty-five pages in length.

4. Accordingly, it is ordered, pursuant to § 0.291 of the Commission's rules, 47 CFR 0.291, That the motion of Satellite Business Systems is granted in part and that parties may file petitions for reconsideration of the *Memorandum Opinion and Order* in CC Docket No. 78-72, Phase I, released August 22, 1983, that do not exceed thirty-five pages.

Jack D. Smith,

Chief, Common Carrier Bureau.

[FR Doc. 83-28345 Filed 10-17-83; 8:45 am]

BILLING CODE 6712-01-M

[1] FCC 83-356, 48 FR 42987 (Sept. 21, 1983).

[2] FCC 82-579, 48 FR 10319 (Mar. 11, 1983).

47 CFR Part 73

[MM Docket No. 83-412; RM-4377]

FM Broadcast Station in Ouray, Colorado; Changes Made in Table of Assignments

AGENCY: Federal Communications Commission.

ACTION: Final rule.

SUMMARY: This action assigns FM Channel 285A to Ouray, Colorado, in response to a petition filed by Kristi R. Westfall. The assignment could provide Ouray with its first FM allocation.

EFFECTIVE DATE: December 12, 1983.

ADDRESS: Federal Communications Commission, Washington, D.C. 20554.

FOR FURTHER INFORMATION CONTACT: Nancy V. Joyner, Mass Media Bureau, (202) 634-6530.

List of Subjects in 47 CFR Part 73

Radio broadcasting.

Report and Order; Proceeding Terminated

In the matter of amendment of § 73.202(b), Table of Assignments, FM Broadcast Stations (Ouray, Colorado), MM Docket No. 83-412 RM-4377.

Adopted: September 27, 1983.

Released: October 11, 1983.

1. Before the Commission is the *Notice of Proposed Rule Making*, 48 FR 20962, published May 10, 1983, issued in response to a petition filed by Kristi R. Westfall ("petitioner"), proposing the assignment of FM Channel 285A to Ouray, Colorado, as that community's first FM allocation. Supporting comments were filed by petitioner reaffirming her intention to apply for the channel, if assigned. No oppositions to the proposal were received.

2. We believe the public interest would benefit from a grant of the petitioner's request since it could provide Ouray with its first local FM service.

3. Channel 285A can be assigned to Ouray in conformity with the minimum distance separation requirements of Section 73.207 of the Commission's Rules.

4. In view of the foregoing, and pursuant to the authority contained in

Sections 4(i), 5(d)(1), 303(g) and (r) and 307(b) of the Communications Act of 1934, as amended, and Sections 0.61, 0.204(b), and 0.283 of the Commission's Rules, it is ordered, that effective December 12, 1983, the FM Table of Assignments, § 73.202(b) of the Commission's Rules, is amended as follows:

City	Channel No.
Ouray, Colorado	285A.

5. It is further ordered, that this proceeding is terminated.

6. For further information concerning the above, contact Nancy V. Joyner, Mass Media Bureau, (202) 634-6530.

Federal Communications Commission.

Roderick K. Porter,

Chief, Policy and Rules Division, Mass Media Bureau.

[FR Doc. 83-28346 Filed 10-17-83; 8:45 am]

BILLING CODE 6712-01-M

DEPARTMENT OF TRANSPORTATION

National Highway Traffic Safety Administration

49 CFR Part 571

[Docket No. 81-02; Notice 2]

Federal Motor Vehicle Safety Standards; Lamps, Reflective Devices, and Associated Equipment

AGENCY: National Highway Traffic Safety Administration (NHTSA), Transportation.

ACTION: Final rule.

SUMMARY: This notice amends Safety Standard No. 108 to require installation of a single center, high-mounted stoplamp on passenger cars, in addition to the stoplamps presently required. Since the new stoplamp is a single function lighting device providing an unambiguous signal, and as it would be closer to the forward line of sight of following drivers, it will reduce rear end collisions by providing a more effective indication to those drivers that the car ahead is slowing or stopping. The amendment is supported by field test data indicating that the reduction in rear end collisions would be significant. A proposal on this subject was issued on December 31, 1980, and published on January 8, 1981 (46 FR 2132).

DATE: Effective date: September 1, 1985.

FURTHER INFORMATION CONTACT: Kevin Cavey, Office of Vehicle Safety Standards, National Highway Traffic Safety Administration, Department of Transportation, Washington, D.C. 20590 (202-426-2153).

SUPPLEMENTARY INFORMATION: Safety Standard No. 108, *Lamps, Reflective Devices and Associated Equipment* (49 CFR 571.108) presently requires passenger cars to be equipped with two stoplamps, mounted on the rear, one on each side of the vertical centerline, as far apart as practicable, and at the same height, which is not less than 15 inches, nor more than 72 inches above the road surface. Notwithstanding those stoplamps, the problem of rear end collisions remains very large.

The Rear End Collision Problem

Of the 4,200 rear end collisions in 1980 (Accident Facts, 1981 edition, p. 47), NHTSA estimates that approximately 3,500,000 were rear end collisions in which a passenger car was struck from behind by another motor vehicle. Based on agency studies, it is estimated that 2,344,000 of the struck passenger cars had their stoplamps on at the time of the collision. Data from NHTSA's Fatal Accident Reporting System (FARS) for 1980 showed 1,104 fatalities in accidents involving rear impacted passenger cars and data from NHTSA's National Accident Sampling System (NASS) showed 603,000 injuries in those accidents.

As NHTSA noted in the January 1981 proposal, the rule under discussion is the culmination of many years of NHTSA and industry-funded research on vehicle rear lighting systems. Early research findings advocated the separation of rear lamps and signals to improve recognition and response to the different functions. Research conducted in the private sector had concluded that reaction time, especially at night, was significantly faster when lamps were high-mounted.

Although NHTSA was encouraged by this research, the agency decided that more data were needed since the research was based on limited real-world testing. Thus, in 1977 NHTSA contracted with Essex Corporation to make a study and field test evaluation of rear lighting systems. The results of this study are contained in Report No. DOT-HS-803 467, "Field Test Evaluation of Rear Lighting Systems," 1978.

The purpose of this study was to determine whether equipping cars with one or more of three experimental rear lighting and sinaling systems would result in a significant reduction in rear-end collisions compared to cars equipped with the current conventionally configured (low-mounted) rear lamps under actual traffic conditions. The three experimental systems were:

1. A single center, high-mounted stoplamp. This stoplamp was installed at the approximate eye-level of a following driver. The stoplamp was positioned on the vehicle's trunk just beneath the centerline of the back window. This stop lamp was supplemental to the normal low-mounted stop and turn signal lamps of the vehicle.

2. A dual high-mounted stop and turn signal lamp system. Two high-mounted stoplamps, one on each side of the trunk directly below the back window, were installed at the approximate eye level of a following driver. These stoplamps were supplemental to the normal low-mounted stop and turn signal lamps of the vehicle.

3. A functionally-separated system. The tail lamp was separated from the stop and turn functions of existing low-mounted lamps of the vehicle.

Approximately 2,100 taxicabs in the Washington, D.C. area participated in the study. The taxicabs were divided into four equal groups. Three of the groups were equipped with one of the three experimental concepts while the fourth or control group was equipped with conventionally configured rear lamps. During the 12-month study period, the four groups accumulated a combined total of nearly 60 million miles under a broad range of weather and road conditions. Drivers in the four groups had been matched for age, sex, and prior accident record. At the end of the study, the four groups had experienced a total of 1,470 accidents, of which 217 or fifteen percent involved taxicabs being struck in the rear while in operation.

The most significant finding of the study was that the rate at which taxicabs equipped with a single center, high-mounted stoplamp were involved in 54 percent fewer relevant rear-end collisions than were experienced by the control group. A relevant rear-end collision is one in which a stoplamp could have affected the outcome. Nonrelevant rear end collisions, e.g., the striking of the rear of a parked car by a moving car, were excluded. This reduction, which was demonstrated to be statistically significant, was achieved whether measured in terms of absolute number or frequency of accidents or in terms of accident rate per million vehicle miles. In addition, of all the cabs struck in the rear, those with the center, high-mounted stoplamp had the lowest mean cost of repair. This indicated that these accidents were less severe than accidents involving vehicles with other stoplamp systems.

To determine whether the drivers of cabs equipped with experimental lamps drove more carefully than drivers in the control group, a comparison of the groups was made based on non-rear-end accidents. The results of this comparison indicate no statistically significant differences between any of the three experimental groups and the control group. The similarity of experience in those crash modes and the difference in rear-end crashes support the finding in the Essex study that the supplemental single center high-mounted stop signal has the potential to dramatically reduce the occurrence of rear-end collisions.

The Essex report recommended that another field study be conducted, using a broader sampling of drivers, passenger cars, and traffic conditions in order to validate its findings. The Allen Corporation contracted to make this validation study and the results are given in the May 1980 Report "Validation of the Reduction of Rear-End Collisions by a High-Mounted Auxiliary Stoplamp," (DOT-HS 805 360).

Accident and exposure (mileage) data were collected on approximately 5,400 telephone company passenger cars, about 2,500 of which were equipped with the single, high-mounted stoplamp. The remaining cars had only conventionally configured stoplamps and served as the control group. The vehicles were operated by seven companies of the Bell Telephone System from New England to Florida, and also in Illinois and California. Data were collected from January 1, 1979, through December 31, 1979. During that time, the vehicles were driven a total of approximately 55 million miles.

The test group received 53 percent fewer rear-end impacts than did the control group. The difference was statistically significant beyond the 99 percent level of confidence. The result is in agreement with the Essex study which found a 54 percent reduction in rear-end impacts. Therefore, the agency tentatively concluded that the single high-mounted stoplamp would provide significant safety benefits beyond those obtained from the safety lighting required by Standard No. 108, and issued its January 1981 proposal for the installation of such a stoplamp.

As proposed by NHTSA, the high-mounted stoplamp would have been required to have an effective projected luminous lens area not less than 4½ square inches in size. A vibration test was specified, under which the lamp would have been energized during the final ten minutes of the test, and required to be functioning at the end. A turn signal, stop, or tail lamp would not have been permitted to have its edge closer then 10 inches to the edge of the high-mounted lamp. Three slightly different alternative locations for the high-mounted lamp were proposed (discussed in more detail below). A common feature of each was that, if mounted inside the vehicle, the lamp would have been required to be provided with means to prevent glare. The photometric requirements would have been those of SAE Recommended Practice J186a "Supplemental High Mounted Stop and Rear Turn Signal Lamps," September 1977, which specifies a maximum of 60 cp for a red supplemental stoplamp.

Since issuance of the proposal, there has been a further field study which verifies the earlier findings. That study, "A Field Test of Two Single High-Mounted Brake Light Systems," was sponsored by the Insurance Institute for Highway Safety (IIHS), and completed in April 1981. The objective of the study, conducted on a fleet of 900 taxicabs operating in New York City, was to establish the effectiveness of single, high-mounted brake lamp configurations in reducing rear-end collisions between vehicles stopping or slowing down.

The most significant finding of the study was that taxis equipped with a single center high-mounted stoplamp had almost 50% fewer rear-end collisions than those experienced by a control group of cabs having a conventional rear light configuration. Two versions of the high-mounted stoplamp were evaluated by the study. One employed a single bulb (44% reduction) and the other dual bulbs in a single housing (58% reduction). The two bulbs were brighter than the single bulb.

Discussion of Comments

1. Effectiveness on Small Cars

One of the major issues raised was the effectiveness of the center high-mounted stoplamps on subcompact cars. Critics of both the Essex and the Allen studies observe that subcompacts were not included in the Essex study and were included in relatively small numbers in the Allen study. Further, even though 329 or 11.2 percent of the 2,927 control cars used in the Allen study were subcompacts, none of these subcompacts were involved in a "relevant" rear-end collision during the test period. This fact has led to the conjecture by some commenters that subcompacts may actually be involved in relevant rear-end collisions to a significantly lesser extent than large cars and that as large cars are slowly being replaced in the fleet by small cars, there will be fewer vehicles involved in relevent rear-end collisions in the coming years. Thus, the effectiveness of center, high-mounted rear stoplamps on subcompact models was questioned.

In response to this criticism, the agency obtained data on all police-reported accidents involving passenger cars struck in relevant rear-end collisions in North Carolina for each year from 1975 through 1980. These data were obtained by size of car (e.g., large, intermediate, compact, subcompact and foreign).[1] The results of this study were:

a. For each year, except 1976, and for the average of all years combined there were no statistically significant differences in relevant rear-end accident rates between intermediate, compact and subcompact domestic cars. However, during 1976, significantly more subcompacts were struck in the rear as compared to compacts and intermediates.

b. For each year, there was a significantly lower relevant rear-end accident rate for large passenger cars compared to smaller ones.

c. In general (average of all years combined), the relevant rear-end accident rate for foreign cars was significantly higher than those of domestic compacts and subcompacts. However, in 1976 and 1977 the accident rate of the foreign and domestic compacts and subcompacts was essentially equivalent.

d. For each size passenger car and for the average of all passenger cars combined, there was no significant change in the rate of occurrence of relevant rear-end accidents from 1975 through 1978. Significantly lower rates were noted in 1979 and 1980, except for foreign cars.

These results are based on North Carolina accidents only, and for the years indicated. However, the North Carolina accident experience is believed to be comparable to that of the Nation taken as a whole for any year. The proportion of municipal and rural roadway mileage of North Carolina and the United States is virtually identical; the motor vehicle death rate for 100 million vehicle miles is only .14 percent higher in North Carolina, while the number of registered drivers per 1000 persons is only 25 persons higher than the National average. Therefore, these

[1] Foreign cars could not be broken down by size of car. Consequently, the size groups listed are for domestic passenger cars. NHTSA has subsequently learned that in the years 1975–80 about 90% of the foreign cars registered in North Carolina were subcompacts and about 9% were compacts.

The rear-end accident rate for foreign cars was significantly higher than that for compact and subcompact domestic cars.

results are strong evidence to indicate that, in general, the fact that a passenger car is smaller than average does not suggest that the car is more likely or less likely to be a struck vehicle in a relevant rear-end collision.

Further information pertinent to the issue of subcompact cars effectiveness is provided by past research on braking perception reaction time sponsored by General Motors at the University of Michigan Transportation Research Institute (formerly the Highway Safety Research Institute). One of the vehicles used to test for reaction time was a subcompact. A statistically significant reduction in reaction time occurred in urban areas when the center high-mounted stoplamp was added to that subcompact.

Another theory set forth is that the center high-mounted stoplamp on a subcompact car may not be perceived by following drivers as being higher than the conventionally configured stoplamps. Thus, subcompacts may not experience the same reductions in collisions as larger cars will. To determine the precise effectiveness of the center high-mounted stoplamp on subcompacts would require additional testing. However, the agency examined typical mounting heights (H_2) for the center lamp and compared these to the current brake light mounting heights (H_1) for subcompacts and larger vehicles. The difference in height (H_2-H_1) was on average 2.35 inches less for subcompacts than larger vehicles (10.35 to 12.7 inches) and 3.3 inches less for the diagonal (24.0 to 27.3 inches). Thus, the differences between the center high-mounted stoplamp for subcompacts is 82 percent and 88 percent of the difference for larger cars. Based on this anlaysis and the previous discussions, the agency concludes that the center high-mounted stoplamp will be as effective for subcompacts as for the larger tested vehicles. Even if subcompacts only achieved 80 percent of the benefit of larger cars, they would be highly cost-effective.

2. Number of High-Mounted Stoplamps

Many of the automobile manufacturers commented on the issues of whether the final rule should require only one rather than two high-mounted stoplamps, as well as where the lamp or lamps should be located. Manufacturers argued that the agency should not be so design restrictive as to specify installation of only a single high-mounted stoplamp. The automobile industry generally favored the use of two high-mounted stoplamps located closer to the sides of a vehicle, in order to provide more styling flexibility. The agency does not agree with this comment because the data show that the single lamp design is more effective.

The Essex field test results show that the dual high-mounted lamps are not so effective as the single high-mounted lamp. One of the experimental groups in the field test consisted of vehicles with two high-mounted combined stop and turn signal lamps. This group did not experience a statistically significant reduction in rear-end accidents compared to the control groups.

3. Location

The 1981 NPRM asked for comments on three alternative locations as follows:

Alternative 1. Each high-mounted stoplamp would have been required to be mounted not less than 34 inches above the road surface:

(a) If practicable, outside the passenger car with the center of the lamp within 3 inches of the outside bottom edge of the rear window daylight opening, or

(b) If compliance with paragraph (a) of this section were not practicable, inside the passenger car with the center of the lamp not more than 3 inches above the inside bottom edge of the rear window daylight opening and with means provided to minimize reflections inside the vehicle from the light upon the rear window glazing, or

(c) If compliance with neither paragraph (a) or (b) of this section were practicable, outside the passenger car with the center of the lamp within 3 inches of the outside top edge of the rear window daylight opening.

Alternative 2. Each high-mounted stoplamp would have been required to be mounted inside or outside the passenger car with the center of the lamp not less than 34 inches and not more than 50 inches above the road surface, and not more than 3 inches below the bottom or above the top of the rear window daylight opening. If the lamp were mounted inside the vehicle, means would have been required to be provided to minimize reflections inside the vehicle from the light upon the rear window glazing.

Alternative 3. Each high-mounted stoplamp would have been required to be mounted:

(a) If practicable, outside the passenger car with its center not less than 38 inches above the ground surface and within 3 inches of the bottom of the rear window daylight opening, or

(b) If compliance with paragraph (a) of this section were not practicable, inside the passenger car with its center as near as practicable to 38 inches above the road surface, and with means provided to minimize reflections inside the vehicle from the light upon the rear window glazing.

In general, commenters recommended Alternative 2, the least design restrictive alternative. However, all the commenting automobile manufacturers, both domestic and foreign, recommended changes to the alternatives. Some wanted a minimum mounting height of 30 inches while others wanted the minimum to be 34 inches. Some agreed that the minimum separation distances between the high-mounted stoplamp and other rear lighting devices should be the proposed 10 inches, others wanted 15 inches. A few manufacturers asked deletion of the proposed requirement that the lamp be within 3 inches of the back window daylight opening. Some manufacturers wanted the decision whether to install the lamp inside or outside the car left to their discretion, and some wanted the option to place the lamp off-center to avoid interferring with the operation and location of rear windshield wiper systems. At least seven different locations were suggested by commenters to accommodate problems presented by different vehicle configurations. For sedans, the suggested locations were the trunk lid or the panel between the trunk lid and the rear window; for hatchbacks, the roof or the hatch; for station wagons, the roof or the tailgate. The seventh location suggested was forward of the rear window (i.e., inside the vehicle).

Based on these comments, the agency decided that none of the three alternatives would adequately accommodate the design problems involved in attempting to install center high-mounted stop lamps on all sizes and body types of cars. Accordingly, NHTSA has decided to eliminate many of the design constraints imposed by the three proposed location alternatives. The final rule requires only that the lamp be located on the vertical centerline of the vehicle, with no portion of the lens higher than the top of the back window nor lower than 3 inches below the bottom. NHTSA did not agree that hatchbacks and station wagons necessitated mounting the lamp on the roof, as it may be mounted at any point on the vehicle centerline within the parameters indicated. The lamp can either be inside or outside the back window. However, if it is inside, means shall be provided so that no reflections from the light of the lamp upon the rear glazing shall be visible to the driver when viewed indirectly in the rearview mirror or viewed directly. NHTSA has concluded that notwithstanding the increased latitude provided by this rule

in lamp placement, the new lamp will still afford the visual cues that proved so effective in the field studies.

4. Leadtime

NHTSA has also decided to establish an effective date of September 1, 1985, i.e., the 1986 model year. This will provide a two year leadtime. The agency believes that this leadtime represents an appropriate balance between minimizing the period in which center high-mounted stop lamps will have to be added to existing models instead of designed into new models and beginning implementation of a very cost-effective requirement that will reduce accidents and injuries.

5. Photometrics

Volkswagen, SAAB, JAMA, Stimsonite, and TSEI recommended that the high-mounted stoplamp have higher photometric requirements than were proposed. The NPRM proposed a minimum of 15 cp and a maximum of 60 cp at the H-V point. Volkswagen recommended that there be a minimum of 40 cp and that the maximum be increased from 60 cp to 75 cp. The JAMA recommended that the stoplamp intensity be increased.

The research performed by Essex and Allen used stoplamps that were intended to meet the photometric requirements of SAE J186a, a minimum of 15 cp and a maximum of 60 cp at the H-V test point. The measurement on a typical sample lamp used in these studies was 32 cp at H-V, but with a maximum of 47 cp. Although the results of these studies showed reduced rear-end collisions, the comments to the docket argue for a higher limit. The agency is especially impressed by the results of the IIHS study where a 58% reduction in collisions was achieved using two bulbs. The candela of the two bulb design was 126 candela at H-V with a maximum of 150. NHTSA has concluded that these results are convincing enough to justify adopting a minimum of 40 cp and a maximum of 160 cp at the H-V point, and the final rule so specifies. It is reasonable to believe that this increase will provide better detection during periods of dusk and dawn, improved visibility when the lamp lens becomes dirty, and better visibility of an inside-mounted lamp through the back window (because the window reduces the light transmittance.)

6. Lamp Size and Shape

The NPRM specified 4.5 square inches as the minimum size of the lamp. This size of lamp was used in the research performed by Essex and Allen. In view of the favorable results obtained in those studies and in the absence of comments providing convincing arguments for a different size, 4.5 square inches is retained in the final rule. The amendment leaves the shape to the judgement of individual manufacturers.

7. Acclimatization Factor

A number of comments argued that once all cars are equipped with the high-mounted stoplamp, it will no longer be effective because all drivers will be "acclimatized" to its effect. According to this argument, the additional lamp will show advantages only when lamps exist on small percentages of vehicles in the total vehicle population.

The agency does not consider this argument to have merit. The addition of a single, high-mounted stoplamp on the centerline of the vehicle has several direct benefits which the agency believes will be of lasting effect. One effect is that its presence on a vehicle (vehicle 1) gives the operator of the immediately following vehicle (vehicle 2) an additional "cue" on the centerline of his vision. A second is that the driver (driver of vehicle 3) behind vehicle 2 will be able to see through that vehicle (if that vehicle is a car) and obtain advance warning about the response of vehicle 2 to vehicle 1. A third benefit is that the supplemental stoplamp will have only one possible meaning as opposed to a stoplamp in the same housing as a taillamp: To indicate that a vehicle is slowing to stop or has stopped. In addition, the candela values adopted are substantially higher than those of lamps in the test fleets, increasing the likelihood that their signal will be perceived by following drivers.

The agency will evaluate the experience of cars equipped with the high-mounted stoplamp over a period of time and determine if there is any acclimatization. The acclimatization factor cannot be definitively determined in the absence of a substantial test fleet. The agency believes that it is at least as likely that the effectiveness of the lamp will increase as decrease in proportion to the percentage of vehicles equipped with it.

8. Vibration Tests

It was proposed that a high-mounted stoplamp be required to continue to provide illumination upon completion of the vibration test specified in SAE J575e. Some commenters disagreed with this requirement. The Japanese Automobile Manufacturers Association (JAMA) stated that the vibration resistance of a bulb is usually determined by making an impact test as defined in SAE J603. In the case of ordinary lamps, the breaking of a filament in the vibration test defined in SAE J575 is excluded. JAMA argued therefore that since the conditions for mounting the stoplamp are the same as those of existing lamps such as license plate lamps, the same vibration tests should suffice. The California Highway Patrol noted that the test appeared to be oriented towards the integrity of the bulb rather than the lamp since it does not permit a failed bulb to be replaced.

The vibration section of SAE J575e was designed as a test for vehicle lamp fixtures to assure that they would not be destroyed or become ineffective in service, and that the fixture mounting was stable. It was not intended to assess the durability of bulbs. Almost all bulb failures result from using up (by boiling away) tungsten of the filament during normal operation or by a fracturing of the filament. Before a filament has been burned, it is quite ductile and can withstand substantial physical abuse without breaking. But after it has been submitted to the 4500–4800°F temperature at which it normally operates, significant changes begin to occur. As the filament is burned, the tungsten takes a different crystalline structure and in time becomes fairly brittle. Thus, as the bulb is burned in normal usage, the filament becomes mechanically weaker from the boiling away of tungsten and less tolerant of physical shock and vibration because it has become more brittle as well.

For these reasons, the agency has decided that the lamp, but not the bulb, will be subject to the vibration tests, consistent with treatment of other vehicle lamps covered by Standard No. 108.

9. Tailgating Education

A concerned citizen asked whether an educational program to inform the public of the hazards of "tailgating" would be more effective in reducing rear-end collisions than the installation of the high-mounted stoplamps.

For many years there have been driver education programs in public and private schools. All these courses have emphasized the hazards of driving too closely to the preceding vehicle. Despite the educaton programs, no significant reduction in rear-end collisions appears to have resulted. In contrast, the effectiveness of the installation of center, high-mounted stoplamps in significantly reducing rear-end collisions has been demonstrated in three separate field studies.

10. Rural Accidents

A number of commenters correctly pointed out that the field studies (Essex, Allen and IIHS) involve mainly urban driving. Thus, there are no data on the effectiveness of the high-mounted stoplamp in predominantly rural driving, even though some test fleet vehicles were occasionally operated in rural areas. Accordingly, the agency is assuming for strictly analytical purposes that the stoplamp will not have any effectiveness in rural driving. This assumption does not mean that NHTSA anticipates that there will not be any benefits in rural driving. The agency believes that there will be some currently unquantifiable benefits and is not aware of any evidence negating the possibility of such benefits.

Summary of Decision

NHTSA is therefore requiring that passenger cars manufactured on or after September 1, 1985, be equipped with a center high-mounted stoplamp. The lamp must be red, with a minimum effective projected luminous lens area of 4.5 square inches and must be designed to meet the requirements of SAE Recommended Practice J186a "Supplemental High Mounted Stop and Rear Turn Signal Lamps," September 1977, except that the laboratory requirements are in accordance with SAE J575e, and the photometric requirements are those specified by NHTSA. The current stoplamp requirements and functions are retained. The center high-mounted stoplamp would be actuated by the stoplamp switch. The lens center of the lamp must be mounted on the vertical centerline of the car as seen from the rear. Because of the variety of passenger car types and the need of the manufacturers to incorporate the lamp into their designs in an economical and orderly manner, it is hereby found that an effective date slightly less than two years after the issuance of this rule is necessary to provide adequate leadtime and therefore is in the public interest.

Alternatives

With additional research, more nearly optimum specifications for stoplamp configurations may be developed. These factors may include more effective intensity, size, beamspread, and location. Other types of lamps or added functions such as deceleration signals may be desirable and should be investigated. However, to delay this rulemaking to await new improvements will result in delay of implementing requirements known to appreciably reduce accidents.

The agency also considered exempting subcompacts from the requirement. While the agency does not have a conclusive test of subcompacts with the center lamp, it knows of no reason why a center high-mounted stoplamp would not be equally effective for subcompacts.

Other alternatives now being investigated include radar or automatic braking and radar warning devices. Radar or automatic braking or warning systems have been developed and may be available as optional systems. Other systems are being developed and may also be available as optional systems. However, time will be needed to test and evaluate these systems. At least several years are likely to pass before there is a possibility that any of these systems can be proved sufficiently effective, reliable, and free of problems for the agency to consider initiating any rulemaking to permit and regulate their use. Further, the cost for automatic braking or radar warning would probably be many times the cost of the high-mounted stoplamp.

Potential Benefits, Costs and Other Impacts

NHTSA has considered the impacts of this rule and determined that the rule is major within the meaning of Executive Order 12291 and significant within the meaning of Department of Transportation guidelines. A regulatory impact analysis discussing those impacts has been prepared and placed in the docket. A copy of the analysis may be obtained free of charge from the Docket Section whose address is given near the beginning of this notice.

Benefits

The Essex study found that for taxicabs in the Washington, D.C. area, the center high-mounted single-function stoplamps reduced relevant rear-end collisions by 54 percent. Similarly, the Allen study found that for telephone company passenger cars operating with these stoplamps in many areas of the country, relevant rear-end collisions were reduced by 53 percent. The IIHS study indicated a 44 to 58 percent reduction. Had all passenger cars been equipped with the center high-mounted stoplamp, NHTSA estimates that there would have been 900,000 fewer accidents, and 40,000 fewer injuries in 1980. Available research data do not permit the agency to estimate the effectiveness of the center high-mounted stoplamp in reducing fatalities. However, the agency believes that it is reasonable to expect that the new stoplamp could reduce fatalities through making possible timely evasive action or reduction in impact speed. In view of the potential that this rule offers in reducing traffic accidents and injuries occurring in such accidents, NHTSA has determined that promulgation of the rule is within the authority delegated by law and consistent with Congressional intent, as expressed in the mandate of the National Traffic and Motor Vehicle Safety Act of 1966 (15 U.S.C. 1381 *et seq.*), an act whose purpose is "to reduce traffic accidents and deaths and injuries resulting from traffic accidents." This rule satisfies the statutory criteria of meeting the need for safety, being practicable and being stated in objective terms. NHTSA has further determined that the factual conclusions upon which this rule is based have substantial support in the agency record, viewed as a whole, with full attention to public comments in general and the comments of people directly affected by the rule in particular.

A center high-mounted system would also reduce property damage. Data on the cost of repair damage from rear-end collisions on a national scale were not available. However, both the Essex and Allen studies reported on repair costs of relevant rear-end accidents for their test fleets. The mean average repair costs per vehicle in the two studies were, consecutively, $402 for the control group and $271 for the single high-mounted stoplamp group (1982 dollars).

Based on the data summarized above, more fully set forth in the final regulatory impact analysis, NHTSA estimates that approximately $434,000,000 (1982 dollars) would have been saved in 1980 in repairs by the avoidance of approximately 900,000 rear-end collisions and, on average, a lessening of severity in another 900,000 relevant rear end collisions.

Costs

Manufacturers estimated that a high-mounted stoplamp will add an average of $8.00 to $15.00 to the price of each car. NHTSA's estimated consumer costs range from about $4.00 (for integration of the lamp into new vehicle designs) to about $7.00 (for adding the lamp to existing vehicle designs). The figures in this range include the cost of installation. Resolution of the differences between these estimates is not possible since the manufacturers did not provide any detailed explanation or support for their estimates. The bases for the agency's two independent estimates are set forth in the regulatory impact analysis. The initial annual consumer cost of the high-mounted stoplamp is expected to be approximately $70 million, based on an annual production of 10 million passenger cars. By model year 1988,

when virtuallly all coupes, sedans, and station wagons could be redesigned to incorporate the lamp, the total annual consumer cost should fall to $40,000,000 or an average cost of $4.00 per stoplamp per car.

Combining the benefits from reductions in property damage and costs of the high-mounted stoplamp yields a net benefit of $394,000,000 per year. (Even if the highest of the unexplained cost figures from the manufacturers were used, there would still be net benefits of $284,000,000.) These net benefit figures are based on the agency's estimate that the stoplamp would be 50 percent effective in reducing relevant rear end collisions involving passenger cars in urban areas. If the stoplamp were only 5 percent effective in reducing rear end accidents, economic costs would just equal economic benefits (exclusive of reductions in injuries or fatalities) in the long run.

The agency anticipates that maintenance and operating costs of the new lamp will be minimal.

Potential Environmental Impacts

This action will not have a significant effect on the environment. NHTSA estimates that the increased fuel consumption caused by adding approximately one-half pound of weight to each car would be only 0.05 gallon per year. This would be a minor increase in use of fuel. The burning of this additional amount of gasoline would also be a negligible factor in air pollution. There are no other known negative environmental impacts.

List of Subjects in 49 CFR Part 571

Imports, Motor vehicle safety, Motor vehicles, Rubber and rubber products, Tires.

§ 571.108 [Amended]

In consideration of the foregoing, 49 CFR 571.108, Motor Vehicle Safety Standard No. 108 is amended as follows:

1. Table III is amended to add the following new item of lighting equipment after "stoplamps":

TABLE III—REQUIRED MOTOR VEHICLE LIGHTING EQUIPMENT: ALL PASSENGER CARS AND MOTORCYCLES, AND MULTIPURPOSE PASSENGER VEHICLES, TRUCKS, TRAILERS, AND BUSES, OF LESS THAN 80 INCHES OVER WIDTH

Item	Passenger cars, multipurpose passenger vehicles, trucks and buses	Trailers	Motorcycles	Applicable SAE standards or recommended practices
*	*	*	*	*
High-mounted stoplamp.	1 red, effective September 1, 1985, for passenger cars only.	Not required	Not required	J186a, September 1977, except that Table 1 in that standard is replaced by Figure 10.
*	*	*	*	*

2. Table IV is amended to add the following new item of lighting equipment after "stoplamps":

TABLE IV—LOCATION OF REQUIRED EQUIPMENT: ALL PASSENGER CARS AND MOTORCYCLES, AND MULTIPURPOSE PASSENGER VEHICLES, TRUCKS, TRAILERS, AND BUSES, OF LESS THAN 80 INCHES OVERALL WIDTH

Item	Location on		Height above road surface measured from center of item on vehicle at curb weight
	Passenger cars, multipurpose passenger vehicles, trucks, trailers, and buses	Motorcycles	
(1)	(2)	(3)	(4)
*	*	*	*
High-mounted stoplamp	On the rear, on the vertical centerline [See S4.3.1.8], effective September 1, 1985, for passenger cars only.	Not required	[See S4.3.1.8].
*	*	*	*

* * * * *

3. New paragraph S4.1.1.41 is added to read:

S4.1.1.41 Each high-mounted stoplamp shall:

(a) Have an effective projected luminous area not less than 4½ square inches.

(b) Have a signal visible to the rear through a horizontal angle from 45 degrees to the left to 45 degrees to the right of the longitudinal axis of the vehicle.

(c) Have the minimum photometric values in the amount and location listed in Figure 10. At the axis reference H–V (where H=0° and V=0°), the intensity shall be not less than 40 and not more than 160 candela.

(d) Provide access for convenient replacement of the bulb without the use of special tools.

4. New paragraph S4.3.1.8 is added to read:

S4.3.1.8 Each high-mounted stoplamp shall be mounted with its center on the vertical centerline of the passenger car as the car is viewed from the rear. No portion of the lens shall be higher than the top of the back window or lower than three inches below the bottom of the back window. If the lamp is mounted inside the vehicle, means shall be provided so that no reflections from the light of the lamp upon the rear window glazing shall be visible to the driver when viewed indirectly in the rearview mirror or viewed directly.

5. Paragraph S4.4.1 is amended by removing the period at the end thereof and adding ", and no high-mounted stoplamp shall be combined with any other lamp or reflective device."

6. Paragraph S4.5.4 is amended by adding the following sentence:

S4.5.4 * * * The high-mounted stoplamp on each passenger car shall be activated only upon application of the service brakes.

7. The final clause of the first sentence of paragraph S5.1 is revised to read:

S5.1 * * *, for stoplamps, tail lamps, and turn signal lamps designed to conform to SAE Standards J586c, J585d/J585e, and J588e, respectively, and for high-mounted stoplamps designed to conform to SAE Recommended Practice J186a, except that Table 1 is replaced by Figure 10.

8. A new figure 10 is added as follows:

FIGURE 10—MINIMUM DESIGN PHOTOMETRIC REQUIREMENTS FOR CENTER HIGH-MOUNTED STOP-LAMPS

Test Points		Red (cd)
10U	10L	13
	V	26
	10R	13
5U and 5D	10L	26
	5L	40
	V	40
	50R	40
	10R	26
	10L	26
	5L	40

FIGURE 10—MINIMUM DESIGN PHOTOMETRIC REQUIREMENTS FOR CENTER HIGH-MOUNTED STOP-LAMPS—Continued

Test Points		Red (cd)
H	V 10R	40 26
	Maximum [1] 160	

[1] The lamp shall not exceed the listed maximum over an area larger than that generated by a ¼ degree radius within a solid cone angle from 10L to 10R and from 10U to 5D.

The engineer and lawyer primarily responsible for this rule are Kevin Cavey and Taylor Vinson, respectively.

(Secs. 103, 119, Pub. L. 89-563; 80 Stat. 718 (15 U.S.C. 1392, 1407); delegations of authority at 49 CFR 1.50)

Issued on October 13, 1983.

Diane K. Steed,

Deputy Administrator.

[FR Doc. 83-28285 Filed 10-13-83; 2:32 am]

BILLING CODE 4910-59-M

DEPARTMENT OF COMMERCE

National Oceanic and Atmospheric Administration

50 CFR Part 663

[Docket No. 30907-183]

Pacific Coast Groundfish Fishery

Correction

In FR Doc. 83-25041 beginning on page 41164 in the issue of Wednesday, September 14, 1983, make the following correction:

On page 41165, column three, paragraph one, line nine, "these actions are taken without prior notice in the" should appear after "FR 8286," and before "Federal Register".

BILLING CODE 1505-01-M

Proposed Rules

Federal Register
Vol. 48, No. 202
Tuesday, October 18, 1983

This section of the FEDERAL REGISTER contains notices to the public of the proposed issuance of rules and regulations. The purpose of these notices is to give interested persons an opportunity to participate in the rule making prior to the adoption of the final rules.

DEPARTMENT OF JUSTICE

Immigration and Naturalization Service

8 CFR Part 103

Powers and Duties of Service Officers; Availability of Service Records

AGENCY: Immigration and Naturalization Service, Justice.

ACTION: Proposed rule.

SUMMARY: The Immigration and Naturalization Service seeks to restrict the use of oral argument for administrative appeals to the Commissioner. Oral argument would be limited to cases where the appellant clearly demonstrates, at the time of filing a notice of appeal, that oral argument is essential to the appeal and that a written brief is inadequate to represent the appellant's position. The problems of scheduling oral arguments and the relatively high rate of cancellation or failure of the appellant to appear cause an intolerable waste of time for the appellate officers.

DATE: Comments must be submitted on or before November 17, 1983.

ADDRESS: Please submit written comments in duplicate to: Office of Policy Directives and Instructions, Immigration and Naturalization Service, 425 Eye Street NW., Room 2011, Washington, D.C. 20536.

FOR FURTHER INFORMATION CONTACT:

For General Information: Loretta J. Shogren, Director, Policy Directives and Instructions, Immigration and Naturalization Service, Telephone: (202) 633-3048.

For Specific Information: Lawrence J. Weinig, Supervisory Immigration Examiner, Immigration and Naturalization Service, Telephone: (202) 633-2680.

SUPPLEMENTARY INFORMATION: Presently, INS Regional Commissioners, in carrying out their duties as appellate authorities, entertain oral argument in lieu of or in addition to a written brief. Oral argument is generally granted upon request. As part of the recent consolidation of the appellate function under the Associate Commissioner for Examinations, a review of the entire process of handling appeals was conducted. It became readily apparent that oral arguments rarely introduce useful evidence which affects the decision. Generally, the material presented during oral argument is read from a brief or is merely a restatement of facts contained in the record.

In addition, the problems of scheduling oral arguments and the relatively high rate of cancellation or failure of the appellant to appear cause an intolerable waste of time for the appellate officers.

In order to reduce the number of oral arguments conducted, the Immigration and Naturalization Service proposes to restrict such argument to cases where the appellant, at the time of filing the appeal, provides convincing evidence that a written brief is inadequate to fairly represent his position. Under the proposed rule, when the appellate authority denies oral argument, the appellant would be granted sufficient time to submit a written brief or other appropriate written material.

In accordance with 5 U.S.C. 605(b), the Commissioner of Immigration and Natuarlization certifies that the rule, if promulgated, would not have a significant economic impact on a number of small entities. This proposed rule would not be a major rule as defined in section 1(b) of E. O. 12291.

List of Subjects in 8 CFR Part 103

Administrative practice and procedure, Authority delegation (Government Agencies), Appeals, Archives and records, Certification, Fees.

PART 103—POWERS AND DUTIES OF SERVICE OFFICERS; AVAILABILITY OF SERVICE RECORDS

Accordingly, it is proposed to amend Part 103 of Chapter I of Title 8 of the Code of Federal Regulations as follows:

1. Section 103.3 would be amended by revising paragraph (c) to read as follows:

§ 103.3 Denials, appeals, and precedent decisions.

* * * * *

(c) *Oral Argument.* If an appeal is taken request for oral argument, if desired, shall be included in the notice of appeal. Such request must set forth facts which explain why oral argument is necessary and why a written brief is inadequate to fairly represent the appellant's position. The officer to whom the appeal is taken shall have sole authority to approve or reject a request for oral argument. Upon approval of a request for oral argument, the appellate authority shall set the time, date, place and manner by which the argument shall be heard. When a request for oral argument is denied, the appellant shall, upon request, be granted a period of up to 30 calendar days in which to submit additional written material.

* * * * *

(Sec. 103, Immigration and Nationality Act, as amended (8 U.S.C. 1103))

Dated: September 24, 1983.

Andrew J. Carmichael, Jr.,

Associate Commissioner, Examinations, Immigration and Naturalization Service.

[FR Doc. 83-28147 Filed 10-17-83; 8:45 am]

BILLING CODE 4410-10-M

DEPARTMENT OF AGRICULTURE

Food Safety and Inspection Service

9 CFR Parts 318 and 381

[Docket No. 83-021P]

Titanium Dioxide in Isolated Soy Protein; Preparation of Meat and Poultry Products

AGENCY: Food Safety and Inspection Service, USDA.

ACTION: Proposed rule.

SUMMARY: This proposed rule would amend the Federal meat and poultry products inspection regulations by removing the requirement that isolated soy protein used as an ingredient in meat or poultry products must contain titanium dioxide. This requirement was promulgated in 1965 for meat products and in 1970 for poultry products as a means of tracing the amount of isolated soy protein used in meat and poultry products. The Food Safety and Inspection Service (FSIS) is proposing this action in response to a petition filed on behalf of Archer Daniels Midland Company, Grain Processing

Corporation, and Ralston Purina Company asserting that such a requirement is no longer necessary.

DATE: Comments must be received on or before December 19, 1983.

ADDRESS: Written comments to: Regulations Office, Attn: Annie Johnson, FSIS Hearing Clerk, Room 2637, South Agriculture Building, Food Safety and Inspection Service, U.S. Department of Agriculture, Washington, D.C. 20250. Oral comments as provided under the Poultry Products Inspection Act should be directed to: Mr. Robert G. Hibbert, (202) 447-6042. (See also "Comments" under **SUPPLEMENTARY INFORMATION.**)

FOR FURTHER INFORMATION CONTACT: Mr. Robert G. Hibbert, Director, Standards and Labeling Division, Meat and Poultry Inspection Technical Services, Food Safety and Inspection Service, U.S. Department of Agriculture, Washington, D.C. 20250, (202) 447-6042.

SUPPLEMENTARY INFORMATION:

Executive Order 12291

The Agency has made an initial determination that this proposed rule is not a major rule under Executive Order 12291. It will not result in an annual effect on the economy of $100 million or more; a major increase in costs or prices for consumers, individual industries, Federal, State, or local government agencies, or geographic regions; or significant adverse effects on competition, employment, investment, productivity, innovation, or on the ability of United States-based enterprises to compete with foreign-based enterprises in domestic or export markets.

Effect on Small Entities

The Administrator, Food Safety and Inspection Service, has determined that this action will not have a significant economic impact on a substantial number of small entities, as defined by the Regulatory Flexibility Act, Pub. L. 96-354 (5 U.S.C. 601). Firms manufacturing isolated soy protein would no longer be required to add titanium dioxide which would reduce a regulatory burden of the affected industry.

Comments

Interested persons are invited to submit comments concerning this proposal. Written comments must be sent in duplicate to the Regulations Office and should bear reference to the docket number located in the heading of this document. Any person desiring an opportunity for an oral presentation of views with respect to the effect of this proposal on the poultry regulations should make such request to Mr. Hibbert so that arrangements can be made for such views to be presented. A transcript will be made of all views orally presented. All comments submitted pursuant to this proposal will be made available for public inspection in the Regulations Office between 9:00 a.m. and 4:00 p.m., Monday through Friday.

Background

On July 9, 1965, the Consumer and Marketing Service (predecessor agency of FSIS) published a final rule in the **Federal Register** (30 FR 8673) allowing the limited use of isolated soy protein (ISP) in sausage and certain other meat food products. ISP is derived from the major proteinaceous portion of soybeans and is used to bind and extend product. The rule provided, however, that ISP used in these products processed in official establishments must contain 0.1 percent titanium added as titanium dioxide. The purpose of requiring the addition of titanium dioxide to ISP was to enable the agency to analytically detect the amount of ISP used in meat food products by calculating the amount of titanium present. This, in turn, allows the agency to determine usage levels of ISP in the sampled products and to assure that products are not adulterated or misbranded through the misuse of ISP. On April 17, 1970, the agency published a final rule in the **Federal Register** (35 FR 6255) allowing the use of ISP in poultry products as well, under conditions identical to such usage in meat food products.

FSIS has been petitioned on behalf of Archer Daniels Midland Company, Grain Processing Corporation, and Ralston Purina Company, all manufacturers of ISP, to delete the requirement that ISP contain titanium dioxide. The petitioners assert that titanium as a tracer in ISP is unnecessary and pointed out that tracers are not required for certain other protein-containing binders, e.g., whey, which also are not fully detectable and measurable by available laboratory analytical methods. The petitioners further claim that such requirement is a barrier to world trade for U.S. meat products containing ISP because the Commission of European Communities prohibits the use of titanium dioxide in ISP. One petitioner has also claimed that titanium dioxide produces an undesirable lightness in color due to its whitening power when used in certain products such as beef patties.

FSIS acknowledges the current lack of acceptable laboratory analytical methods for distinguishing ISP in meat and poultry products. However, FSIS has established certain procedures which are capable of assuring that meat and poultry products containing ISP and other added substances are properly formulated and labeled. Before ISP, whey, and other substances may be used in a product, the manufacturer must obtain FSIS approval of the product's formula and label to ensure that such substances would be used in proper quantities in accordance with the standards of identity and that appropriate information would be conveyed to the consumer through labeling. Additionally, as products are produced in official establishments, FSIS inspectors monitor the usage of substances to verify that the approved formula is followed.

Experience has shown that there is no reason to distinguish ISP as any more likely to be misused than other substances given the existing inspection procedures. Therefore, it appears that there is no continuing need for the use of titanium dioxide as a tracer in ISP, and, thus, FSIS is proposing to revoke such requirement.

List of Subjects

9 CFR Part 318

Food additives, Meat inspection, Preparation of products.

9 CFR Part 381

Food additives, Poultry products inspection.

The Proposal

PART 318—[AMENDED]

Accordingly, it is proposed to revise the Federal meat and poultry products inspection regulations as follows:

1. The authority citation for Part 318 reads as follows:

Authority: 34 Stat. 1260, 79 Stat. 903, as amended, 81 Stat. 584, 84 Stat. 91, 21 U.S.C 71 *et seq.*, 601 *et seq.*, 33 U.S.C. 1254.

§ 318.6 [Amended]

2. Section 318.6(b) of the Federal meat inspection regulations (9 CFR 318.6) would be amended by removing the present paragraph (b)(11) and redesignating paragraph (b)(12) as (b)(11).

3. The authority citation for Part 381 reads as follows:

Authority: Sec. 14, Poultry Products Inspection Act, as amended by the Wholesome Poultry Products Act (21 U.S C. 451 *et seq.*); the Talmadge-Aiken Act of September 28, 1962 (7.U.S.C. 750); and subsection 21(b), Federal Water Pollution Control Act, as amended by Public Law 91-224 and by other laws (33 U.S.C. 1254).

§ 381.147 [Amended]

4. Section 381.147 of the poultry products inspection regulations (9 CFR 381.147) would be amended by removing the present paragraph (e) and redesignating paragraph (f) as paragraph (e).

Done at Washington, D.C. on September 29, 1983.

Donald L. Houston,

Administrator, Food Safety and Inspection Service.

[FR Doc. 83-28279 Filed 10-17-83; 8:45 am]

BILLING CODE 3410-DM-M

DEPARTMENT OF TRANSPORTATION

Federal Aviation Administration

14 CFR Part 71

[Airspace Docket No. 83-ASO-29]

Proposed Alteration of VOR Federal Airways

AGENCY: Federal Aviation Administration (FAA), DOT.

ACTION: Notice of proposed rulemaking.

SUMMARY: This notice proposes to realign VOR Federal Airways V-53 and V-311 located in the vicinity of Columbia, SC. The realignment of these airways would improve traffic flow between Charleston, SC, and Columbia, SC. This action would increase safety and improve traffic flow due to increased flexibility for meaneuvering traffic.

DATES: Comments must be received on or before December 5, 1983.

ADDRESSES: Send comments on the proposal in triplicate to: Director, FAA, Southern Region, Attention: Manager, Air Traffic Division, Docket No. 83-ASO-29, Federal Aviation Administration, P.O. Box 20636, Atlanta, GA 30320.

The official docket may be examined in the Rules Docket, weekdays, except Federal holidays, between 8:30 a.m. and 5:00 p.m. The FAA Rules Docket is located in the Office of the Chief Counsel, Room 916, 800 Independence Avenue, SW., Washington, D.C.

An informal docket may also be examined during normal business hours at the office of the Regional Air Traffic Division.

FOR FURTHER INFORMATION CONTACT: Lewis W. Still, Airspace and Air Traffic Rulles Branch (AAT-230), Airspace-Rules and Aeronautical Information Division, Air Traffic Service, Federal Aviation Administration, 800 Independence Avenue, SW., Washington, D.C. 20591; telephone: (202) 426-8783.

SUPPLEMENTARY INFORMATION:

Comments Invited

Interested parties are invited to participate in this proposed rulemaking by submitting such written data, views, or arguements as they may desire. Comments that provide the factual basis supporting the views and suggestions presented are particularly helpful in developing reasoned regulatory decisions on the proposal. Comments are specifically invited on the overall regulatory, economic environmental, and energy aspects of the proposal. Communications should identify the airspace docket and be submitted in triplicate to the address listed above. Commenters wishing the FAA to acknowledge receipt of their comments on this notice must submit with those comments a self-addressed, stamp postcard on which the following statement is made: "Comments to Airspace Docket No. 83-ASO-29." The postcard will be date/time stamped and returned to the commenter. All communications received before the specified closing date for comments will be considered before taking action on the proposed rule. The proposal contained in this notice may be changed in the light of comments received. All comments submitted will be available for examination in the Rules Docket both before and after the closing date for comments. A report summarizing each substantive public contact with FAA personnel concerned with this rulemaking will be filed in the docket.

Availability of NPRM's

Any person may obtain a copy of this Notice of Proposed Rulemaking (NPRM) by submitting a request to the Federal Aviation Administration, Office of Public Affairs, Attention: Public Information Center, APA-430, 800 Independence Avenue, SW., Washington, D.C. 20591, or by calling (202) 426-8058. Communications must identify the notice number of this NPRM. Persons interested in being placed on a mailing list for future NPRM's should also request a copy of Advisory Circular No. 11-2 which describes the application procedure.

The Proposal

The FAA is considering an amendment to § 71.123 of Part 71 of the Federal Aviation Regulations (14 CFR Part 71) to alter the descriptions of VOR Federal Airways V-53 in part, between Columbia, SC, and Charleston, SC, and V-311 in part, between Columbia, SC and Charleston, SC. The realignment would allow increased use of tower en route air traffic control procedures, thereby reducing controller workload, expediting traffic and reducing en route and terminal delays. Section 71.123 of Part 71 of the Federal Aviation Regulations was republished in Advisory Circular AC 70-3A dated January 3, 1983.

List of Subjects in 14 CFR Part 71

VOR Federal Airways, Aviation safety.

The Proposed Amendment

Accordingly, pursuant to the authority delegated to me, the Federal Aviation Administration proposes to amend § 71.123 of Part 71 of the Federal Aviation Regulations (14 CFR Part 71) as follows:

V-53 [Amended]

By deleting the words "From Charleston, SC, INT Charleston 296° and Columbia, SC, 153° radials; Columbia;" and substituting the words "From Charleston, SC, via Columbia, SC;"

V-311 [Amended]

By deleting the words "Columbia, SC;" and substituting the words "Columbia, SC; INT Columbia 153°T(155°M) and Charleston, SC, 296°T(298°M) radials; Charleston."

(Secs. 307(a) and 313(a), Federal Aviation Act of 1958 (49 U.S.C. 1348(a) and 1354(a)); (49 U.S.C. 106(g) (Revised, Pub. L. 97-449, January 12, 1983)); and 14 CFR 11.65)

Note.—The FAA has determined that this proposed regulation only involves an established body of technical regulations for which frequent and routine amendmens are necessary to keep them operationally current. It, therefore—(1) is not a "major rule" under Excutive Order 12291; (2) is not a "significant rule" under DOT Regulatory Policies and Procedures (44 FR 11034; February 26, 1979); and (3) does not warrant preparation of a regulatory evaluation as the anticipated impact is so minimal. Since this is a routine matter that will only affect air traffic procedures and air navigation, it is certified that rule, when promulgated, will not have a significant economic impact on a substantial number of small entities under the criteria of the Regulatory Flexibility Act.

Issued in Washington, D.C. on October 11, 1983.

B. Keith Potts,

Manager, Airspace-Rules and Aeronautical Information Division.

[FR Doc. 83-28307 Filed 10-17-83; 8:45 am]

BILLING CODE 4910-13-M

SECURITIES AND EXCHANGE COMMISSION

17 CFR Parts 240 and 249

[Release No. 34-20263; File No. S7-997]

Proposed Suspension of Periodic Reporting Obligation

AGENCY: Securities and Exchange Commission.

ACTION: Proposed rulemaking.

SUMMARY: The Commission is proposing to revise its rules governing suspension from issuers' periodic reporting requirements. These revisions would make the conditions and procedures for effecting such suspension the same for all issuers. All issuers, whatever the source of their reporting obligation, would be permitted, under the proposed rule, to discontinue their filings immediately upon meeting the specified thresholds and other conditions of the rule. In addition, the proposed revisions would standardize the conditions and procedures for effecting such suspension and would consolidate such provisions in one rule. The Commission also is proposing a new, simplified form for reporting such suspension. These changes are intended to eliminate an unnecessary inconsistency in the provisions suspending the obligation of issuers to file periodic reports, and to standardize and to simplify the suspension process.

DATE: Comments must be received on or before December 5, 1983.

ADDRESSES: All communications on the matters discussed in the release should be submitted in triplicate to George A. Fitzsimmons, Secretary, Securities and Exchange Commission, 450 Fifth Street, NW., Washington, D.C. 20549. Comments should refer to File No. S7-997 and will be available for public inspection and copying in the Commission's Public Reference Room.

FOR FURTHER INFORMATION CONTACT: William E. Toomey (202) 272-2573, Division of Corporation Finance, Securities and Exchange Commission, 450 Fifth Street, NW., Washington, D.C. 20549.

SUPPLEMENTARY INFORMATION: The Commission is proposing for comment revisions to Rule 12h-3 under the Securities Exchange Act of 1934 that would extend the immediate suspension of the Section 15(d) reporting obligation to any class of securities held of record: (i) By less than 300 persons, or by less than 500 persons where the total assets of the issuer have not exceeded $3,000,000 on the last day of each of the issuer's three most recent fiscal years; or (ii) in the case of a foreign private issuer, by less than 300 persons resident in the United States or by less than 500 persons resident in the United States where the total assets of the issuer have not exceeded $3,000,000 on the last day of each of the issuer's three most recent fiscal years: Because the proposed revisions to Rule 12h-3 would include the existing provisions of Rule 12h-4, the Commission is proposing to rescind that rule. Similarly, since the substantive provisions of Rule 15d-6 would be subsumed by the proposed amendments to Rule 12h-3, the Commission is proposing to revise Rule 15d-6 to provide simply for the filing of a notice of suspension where suspension of the reporting requirement is to be done solely on the basis of Section 15(d) of the Exchange Act. In order to provide notice of suspension under revised Rule 12h-3, the Commission is proposing the adoption of new Form 15 which would replace existing Form 12g-4/15dp-6. Finally, the Commission is proposing to amend Rule 12g-4 to reflect the adoption of new Form 15. The Commission believes that these actions will not only ease reporting burdens where appropriate, but also simplify the notice procedure for suspension of the duty to file reports under Section 15(d).

I. Background

Section 13 of the Securities Exchange Act of 1934 (the "Exchange Act") [15 U.S.C. 78a-78kk (1976 & Supp. V 1981), *as amended by* Act of June 6, 1983, Pub. L. No. 98-38] establishes a periodic reporting obligation for every issuer of a class of securities registered under Section 12 of the Exchange Act. Thus, issuers with securities listed on a national securities exchange under Section 12(b) of the Exchange Act, as well as issuers required by amount of total assets and number of security holders to register certain classes of equity securities under Section 12(g) of the Act, must file prescribed periodic reports with the Commission. The purpose of Section 13 is to provide investors and the public with current information concerning the business activities of issuers with securities registered under Section 12. Section 15(d) of the Exchange Act imposes a similar periodic reporting obligation on any issuer with respect to a class of securities registered under the Securities Act of 1933 (the "Securities Act") [15 U.S.C. 77a-77aa (1976 & Supp. V 1981), *as amended by* Bus Regulatory Reform Act of 1982, Pub. L. No. 97-261, section 19(d), 96 Stat. 1121 (1982)]. The purpose of Section 15(d) is to assure a stream of current information about an issuer for the benefit of purchasers in the registered offering, and for the public, in situations where Section 13 of the Exchange Act would not otherwise apply.

Congress recognized, with respect to Section 15(d), that the benefits of periodic reporting by an issuer might not always be commensurate with the burdens imposed, particularly where smaller companies were involved. Accordingly, Section 15(d) provides that the duty to file reports under that section shall be automatically suspended as to any fiscal year (other than the year in which the Securities Act registration statement becomes effective) if at the beginning of such fiscal year the securities of each class to which registration statement relates are held of record by less than 300 persons. In addition, Rule 15-6 [17 CFR 240.15d-6] under the Exchange Act permits suspension of the reporting obligation if at the beginning of a fiscal year, other than the year within which a registration statement under the Securities Act becomes effective and the two succeeding years, all securities of each class registered are held of record by less than 500 persons and on the last day of each of the issuer's three most recent fiscal years total assets of the issuer did not exceed $3 million. Rule 15d-6 also prescribes the current notice procedure for suspension of reporting under this provision.

Pursuant to its exemptive authority under Section 12(h) of the Exchange Act, the Commission has expanded the situations in which the Section 15(d) reporting requirement can be suspended by adopting Rules 12h-3 and 12h-4 (17 CFR 240.12h-3 and 12h-4).[1] These rules provide for suspension of Section 15(d) reporting for certain securities deregistered pursuant to Section 12(d) of the Exchange Act (Rule 12h-3) and for securities of a foreign issuer owned of record by less than 300 holders resident in the United States (Rule 12h-4). Unlike the provisions of Section 15(d) and Rule 15d-6, a suspension under Rule 12h-3 and 12h-4 does not depend on the number of record holders as of a particular date, but rather can be effected on any date the triggering events occur and the requisite filing requirements and other conditions are met.

II. The proposals

The proposed revisions of Rule 12h-3 would combine the existing provisions of Rules 12h-3 and 12h-4, with some revision, and would extend the

[1] Rule 15d-6 (a)(2) was adopted pursuant to both Sections 12(h) and 15(d) of the Exchange Act.

immediate suspension of the Section 15(d) reporting obligation to any class of securities held of record: (i) By less than 300 persons, or by less than 500 persons where the total assets of the issuer have not exceeded $3,000,000 on the last day of each of the issuer's three most recent fiscal years; or (ii) in the case of a foreign private issuer, by less than 300 persons resident in the United States or by less than 500 persons resident in the United States where the total assets of the issuer have not exceed $3,000,000 on the last day of each of the issuer's three most recent fiscal years.

This expansion of the immediate suspension of the reporting obligation under Section 15(d) is designed to parallel the provisions for the suspension of the reporting requirement for issuers whose securities are registered under Section 12(g) of the Exchange Act. The Commission believes that given the identical nature of the issuer periodic reporting obligations under Section 12(g) and Section 15(d), such obligations should be subject to comparable standards for suspension. At the present time, this is not the case. As pointed out previously, Section 15(d) issuers must continue to report through the end of the fiscal year in which the number of record holders falls below the specified number in Rule 15d-6, while Section 12(g) issuers can obtain reporting relief immediately upon meeting the same threshold specified in Rule 12g-4. There appears little reason for this distinction.

There would be one principal difference in the suspension proposed to be provided in revised Rule 12h-3 and that provided in current Rule 12g-4. The suspension provided under proposed Rule 12h-3 would not be available with respect to any fiscal year in which a registration statement under the Securities Act become effective or is required to be updated pursuant to Section 10(a)(3) of the Act.[2] This limitation is in keeping with the philosophy reflected in Section 15(d) of the Exchange Act that generally the investing public should have available complete information about the issuer's activities at least through the end of the year in which it makes a registered offering.[3]

In addition to extending the immediate suspension of the reporting obligation, the Commission is proposing to simplify and standardize the procedure for suspension. To accomplish this, the Commission is proposing to revise Rule 12h-3 to specify the situations for which a suspension is permitted and to provide uniform procedures for effecting suspension. If Rule 12h-3 is adopted, current Rule 12h-4 would be rescinded and its substance incorporated into revised Rule12h-3. Rule 15d-6 would be revised to require only that a Form 15 be filed by a person relying solely on the provisions of Section 15(d) to suspend its reporting obligation.

1. Securities Eligible for Suspension

The three categories of securities to which the proposed rule would apply are:

(1) Any class of securities held of record by: (i) Less than 300 persons; or (ii) by less than 500 persons, where the total assets of the issuer have not exceeded $3,000,000 on the last day of each of the issuer's three most recent fiscal years;

(2) Any class of securities of a foreign private issuer, as defined in Rule 3b-4 [17 CFR 240.3b-4]; held of record by: (i) Less than 300 persons resident in the United States, computed as specified in Rule 12g3-2(a) [17 CFR 240.12g3-2(a)]; or (ii) less than 500 persons resident in the United States computed as specified in Rule 12g3-2(a), where the total assets of the issuer have not exceeded $3,000,000 on the last day of each of the issuer's three most recent fiscal years; and

(3) Any class of securities deregistered pursuant to Section 12(d) of the Exchange Act if such class would not thereupon be deemed registered under Section 12(g) of the Exchange Act or the rules thereunder.

2. Conditions of the Rule

Under proposed Rule 12h-3, the suspension of the reporting obligation would be available only if two conditions are met. The first condition would require the issuer to file proposed Form 15 which is a certification that it qualifies for the suspension provided by the Rule. The purpose of this filing would be to provide public notice of the claimed suspension.

Second, as required by existing Rule 12h-3, the issuer must be current in its periodic reports. Under proposed Rule 12h-3, to be eligible for immediate suspension of its reporting obligations, an issuer must have filed all periodic reports required by Section 13(a) of the Exchange Act for the shorter of its three most recent fiscal years and that portion of the current fiscal year preceding the filing of the certification on Form 15 or the period since it become subject to such reporting obligations. For the purpose of determining whether a particular report was required to be filed, the due date specified in the Form for that report would govern, without regard to the effect of Rule 12b-25 [17 CFR 240.12b-25] under the Exchange Act. Thus, for example, an issuer which had obtained an extension of time under Rule 12b-25 to file a required periodic report, and then filed a certification on Form 15 during the extension period, would still have to file the periodic report in question, since the original due date for the report elapsed prior to the filing of the Form 15 certification.

3. Limitations on Availability and Coverage

The Rule would not be available to an issuer with respect to any fiscal year in which a registration statement under the Securities Act became effective or was required to be updated pursuant to Section 10(a)(3) of the Act, except in the case of securities registered under the Securities Act in connection with the formation of a single subsidiary holding company, a structural change often used by banks. The Commission believes that such a reoganization is essentially technical in nature since it does not materially alter the interests of security holders, and therefore does not justify the imposition of the periodic reporting requirement. Accordingly, paragraphs (c) and (d) of the Rule provide, in effect, that no Section 15(d) reporting obligation will ever arise from a registration statement filed for this limited purpose.[4]

The suspension of the reporting obligation will continue through each subsequent fiscal year in which the eligibility criteria are met on the first day of such year. If the eligibility criteria are not met at the commencement of the fiscal year, any report due to be filed on or after such date, including the Form 10-K relating to the preceding year, would have to be filed. The Commission is aware that this may necessitate audited financial statements for periods in which Form 10-Q reports have not been filed. However, this requirement is comparable to the requirement that a

[2] Section 10(a)(3) of the Securities Act requires an issuer to update any registration statement being used by it to sell securities if the information is no longer current.

[3] For example, in the case of a company that has an effective registration in year 1, but whose securities are held by less than 300 record holders at the beginning of year 2, the company could effect a suspension at the beginning of year 2 for all reports due following the date of such suspension, except the Form 10-K relating to year 1.

[4] This exception applies only to a reporting obligation which arises solely from a registration statement filed for the purpose of forming a one subsidiary holding company. The provision affords no relief from a reporting obligation arising from the filing of another registration statement by the same issuer, nor does it extend to any reporting obligation which may stem from the inclusion of a separate offering in the initial holding company formation registration statement.

new Form 10 be filed by a former Section 12(g) issuer, that has terminated its reporting pursuant to Rule 12g–4, and then again meets the Section 12(g) criteria and is required to recommence reporting. The Commission believes audited financial statements are no less important when a suspended or terminated reporting obligation is revived than when a reporting obligation is initially incurred. The Commission recognizes that the Section 12(g) issuer has 120 days to file its Form 10 rather than the 90 days applicable to the Form 10–K, and solicits comment as to the appropriate period for the filing of the Form 10–K upon discontinuance of the suspension. Of course, if the number of record holders falls below the specified level after the reporting obligation has been revived, the issuer could immediately obtain another suspension of that obligation under the rule, provided it met all applicable conditions at that time.

Finally, as Rules 12h–3 and 12h–4 currently provide, the proposed revised rule states that if an issuer files a certification on Form 15 which is later withdrawn or denied, it will be required to file, within 60 days after the withdrawal or denial, all periodic reports it should have filed in the interim.

4. Proposed Form 15

Proposed Form 15 would replace existing Form 12g–4/15d–6, a combination form which has been used for a number of years to notify the Commission and the public of termination of registration under Section 12(g) of the Exchange Act, and suspension of reporting pursuant to Rule 15–6. The proposed new form would eliminate duplicative and unnecessary information currently required to be filed and would be simpler to prepare. Essentially, the Form would require the name and address of the issuer, the class of securities involved, the number of record holders thereof, and the rule provision relied on for suspension of the duty to file reports. The relevant rule provisions would be listed on the form and could be designated by check mark. While proposed Form 15 has been designed with a view to simplicity, it must be emphasized that the filing of the form would be a condition to the availability of the new rule, and that suspension of the duty to file reports would be contingent on the filing of the form.[6]

In the event Form 15 is adopted to replace Form 12g–4/15d–6, it also will be necessary to change all references to the old form that now exist in the Commission's rules. Accordingly, the Commission is proposing to amend Rules 12g–4 and Rule 15d–6 for this purpose.

III. Summary of Regulatory Flexibility Analysis

The Commission has prepared an Initial Regulatory Flexibility Analysis in accordance with 5 U.S.C. 603, regarding the proposed revision of Rule 12h–3 and the associated amendments proposed herein.

The analysis notes that the revisions to Rule 12h–3 and the related amendments are being proposed to standardize for issuers the provisions for obtaining relief from the periodic reporting requirements of the Exchange Act. At the present time, an issuer that files reports pursuant to Section 13 of the Exchange Act can suspend its reporting obligation whenever it has fewer than 300 security holders. An issuer filing similar reports pursuant to Section 15(d) of the Exchange Act, however, can suspend its obligation only when it has fewer than 300 security holders at the beginning of a fiscal year. The analysis notes that this different treatment may impose a hardship on the Section 15(d) issuer by requiring it to continue to file reports in circumstances where there may be little public interest in the company. Under the new proposals, a Section 15(d) issuer will be able to obtain immediate suspension of the periodic reporting obligation at any time that it has fewer than 300 security holders.

The Commission also stated that for purposes of the analysis, the Commission was using the definition for small business adopted in Securities Exchange Act Release No. 18452 (March 8, 1982) [47 FR 5215]. That definition provides that when used in reference to the Exchange Act, small business means any issuer whose total assets on the last day of its most recent fiscal year were $3 million or less. It is likely that the proposed changes will directly benefit a significant number of issuers who fall within the small business definition, and an even larger number of issuers whose size technically excludes them from the definition but which nonetheless might be considered smaller issuers. The proposals will not increase the Exchange Act reporting burden for any issuer, and no additional recordkeeping or reporting will be required except a notification to the Commission of the suspension of the reporting obligation. Such a notice may require the skills of a professional familiar with the securities laws and some services by management, but does not require any recordkeeping or reporting beyond that already required by the Exchange Act.

A copy of the Initial Regulatory Flexibility Analysis may be obtained by contacting William E. Toomey, Division of Corporation Finance, United States Securities and Exchange Commission, 450 5th Street, NW., Washington, D.C., 20549, at (202) 272–2573.

IV. List of Subjects in 17 CFR Parts 240 and 249

Forms, Reporting and recordkeeping requirements, Securities.

V. Text of Proposals

In accordance with the foregoing, Title 17, Chapter II, of the Code of Federal Regulations is proposed to be amended as follows:

PART 240—GENERAL RULES AND REGULATIONS, SECURITIES EXCHANGE ACT OF 1934

1. By revising § 240.12h–3, Rule 12h–3, to read as follows:

§ 240.12h–3 Suspension of duty to file reports under section 15(d).

(a) Subject to paragraphs (c) and (d) of this section, the duty under section 15(d) to file reports required by section 13(a) of the Act with respect to a class of securities specified in paragraph (b) of this section shall be suspended for such class of securities immediately upon filing with the Commission a certification on Form 15 [17 CFR 249.323] if the issuer of such class has filed all reports required by section 13(a), without regard to Rule 12b–25 [17 CFR 249.322], for the shorter of its most recent three fiscal years and the portion of the current year preceding the date of filing Form 15, or the period since the issuer became subject to such reporting obligation. If the certification on Form 15 is subsequently withdrawn or denied, the issuer shall, within 60 days, file with the Commission all reports which would have been required if such certification had not been filed.

(b) The classes of securities eligible for the suspension provided in paragraph (a) of this section are:

(1) Any class of securities held of record by: (i) less than 300 persons; or (ii) by less than 500 persons, where the total assets of the issuer have not exceeded $3,000,000 on the last day of each of the issuer's three most recent fiscal years;

[6] This would not be true of a suspension effected solely on the basis of the provisions of Section 15(d) of the Exchange Act. In that case, failure to file the Form would be a violation of the reporting requirements under the Exchange Act pursuant to Rule 15d–6.

(2) Any class of securities of a foreign private issuer, as defined in Rule 3b–4 [§ 240.3b–4], held of record by: (i) Less than 300 persons resident in the United States or (ii) less than 500 persons resident in the United States where the total assets of the issuer have not exceeded $3,000,000 on the last day of each of the issuer's three most recent fiscal years. For purposes of this paragraph, the number of persons resident in the United States shall be determined in accordance with the provisions of Rule 12g–3–2(a) [§ 240.12g3–2(a)]; and

(3) Any class of securities deregistered pursuant to section 12(d) of the Act is such class would not thereupon be deemed registered under section 12(g) of the Act or the rules thereunder.

(c) This section shall not be available to an issuer for a fiscal year in which a registration statement becomes effective under the Securities Act of 1983, or is required to be updated pursuant to section 10(a)(3) of the Act, and, in the case of paragraphs (b)(1)(ii) and (b)(2)(ii), the two succeeding fiscal years. *Provided,* however, that this paragraph shall not apply to the duty to file reports which arises solely from a registration statement filed by an issuer with no significant assets, for the reorganization of a non-reporting issuer into a one subsidiary holding company in which equity security holders receive the same proportional interest in the holding company as they held in the non-reporting issuer, except for changes resulting from the exercise of dissenting shareholder rights under state law.

(d) The suspension provided by this rule relates only to the reporting obligation under section 15(d) with respect to a class of securities, does not affect any other duties imposed on that class of securities, and shall continue as long as criteria (i) or (ii) in either paragraph (b)(1) or (b)(2) is met on the first day of any subsequent fiscal year. *Provided,* however, that such criteria need not be met if the duty to file reports arises solely from a registration statement filed by an issuer with no significant assets in a reorganization of a non-reporting company into a one subsidiary holding company in which equity security holders receive the same proportional interest in the holding company as they held in the non-reporting issuer except for changes resulting from the exercise of dissenting shareholder rights under state law.

2. By revising § 240.12g3–2, Rule 12g3–2, to remove paragraph (a)(2) and redesignate paragraph (a)(1) as (a).

3. By revising § 240.12g–4, Rule 12g–4, to read as follows:

§ 240.12g–4 Certification of termination of registration under section 12(g).

(a) Termination of registration of a class of securities shall take effect in 90 days, or such shorter period as the Commission may determine, after the issuer certifies to the Commission on Form 15 that:

(1) Such class of securities is held of record by: (i) Less than 300 persons; or (ii) b less than 500 persons, where the total assets of the issuer have not exceeded $3,000,000 on the last day of each of the issuer's three most recent fiscal years; or

(2) Such class of securities of a foreign private issuer, as defined in Rule 3b–4 [§ 240.3b–4], is held of record by: (i) Less than 300 persons resident in the United States or (ii) less than 500 persons resident in the United States where the total assets of the issuer have not exceeded $3,000,000 on the last day of each of the issuer's most recent three fiscal years. For purposes of this paragraph, the number of persons resident in the United States shall be determined in accordance with the provisions of Rule 12g3–2(a) [§ 240.12g3–2(a)].

(b) The issuer's duty to file any reports required under section 13(a) shall be suspended immediately upon filing a certification on Form 15, *Provided,* however, that if the certification on Form 15 is subsequently withdrawn or denied, the issuer shall, within 60 days after the date of such withdrawal or denial, file with the Commission all reports which would have been required had the certification on Form 15 not been filed. If the suspension resulted from the issuer's merger into, or consolidation with, another issuer or issuers, the certification shall be filed by the successor issuer.

3. By removing in its entirety § 240.12h–4, Rule 12h–4.

4. By revising § 240.15d–6, Rule 15d–6, to read as follows:

§ 240.15d–6 Suspension of duty to file reports.

If the duty of an issuer to file reports pursuant to section 15(d) of the Act as to any fiscal year is suspended as provided in section 15(d) of the Act, such issuer shall, within 30 days after the beginning of the first such fiscal year, file a notice on Form 15 informing the Commission of such suspension. If the suspension resulted from the issuer's merger into, or consolidation with, another issuer or issuers, the notice shall be filed by the successor issuer.

PART 249—FORMS, SECURITIES EXCHANGE ACT OF 1934

1. By redesignating Form 12g–4, described in 17 CFR 249.323, and Form 15d–6, described in 17 CFR 249.333, as Form 15, 17 CFR 249.323 (Form 15 does not appear in the Code of Federal Regulations), and by revising 17 CFR 249.323 to read as follows:

§ 249.323 Form 15, certification of termination of registration of a class of security under section 12(g) or notice of suspension of duty to file reports pursuant to sections 13 and 15(d) of the Act.

(a) This form shall be filed by each issuer to certify that the number of holders of record of a class of security registered under section 12(g) of the Act is reduced to less than 300 persons, or that the number of holders of record of a class of security registered under section 12(g) of the Act is reduced to less than 500 persons and the total assets of the issuer have not exceeded $3,000,000 on the last day of each of the issuer's three most recent fiscal years. Registration terminates 90 days after the filing of the certificate or within such shorter time as the Commission may direct.

(b) This form shall also be filed by each issuer required to file reports pursuant to section 15(d) of the Act, as a notification that the duty to file such reports is suspended in accordance with the provisions of Section 15(d) because all securities of each class of such issuer registered under the Securities Act of 1933 are held of record by less than 300 persons at the beginning of its fiscal year, or otherwise in accordance with the provisions of Rule 12h–3 [17 CFR 240.12h–3].

Securities and Exchange Commission

Washington, D.C. 20549

Form 15

Certification and Notice of Termination of Registration under Section 12(g) of the Securities Exchange Act of 1934 or Suspension of Duty to File Reports Under Sections 13 and 15(d) of the Securities Exchange Act of 1934.

Commission File Number _____

_____

(Exact name of registrant as specified in its charter)

_____

(Address, including zip code, and telephone number, including area code, of registrant's principal executive offices)

_____

(Title of each class of securities covered by this Form)

_____

(Titles of all other classes of securities for which a duty to file reports under section 13(a) or 15(d) remains)

Please place an X in the box(es) to designate the appropriate rule provision(s) relied upon to terminate or suspend the duty to file reports:

☐ Rule 12g-4(a)(1)(i)
☐ Rule 12g-4(a)(1)(ii)
☐ Rule 12g-4(a)(2)(i)
☐ Rule 12g-4(a)(2)(ii)
☐ Rule 12h-3(b)(1)(i)
☐ Rule 12h-3(b)(1)(ii)
☐ Rule 12h-3(b)(2)(i)
☐ Rule 12h-3(b)(2)(ii)

Approximate number of holders of record as of the certification or notice date:

(Record Holders) _____
(Date) _____

Pursuant to the requirements of the Securities Exchange Act of 1934 *(Name of registrant as specified in charter)* has caused this certification/notice to be signed on its behalf by the undersigned duly authorized person.

Date: _____
By: _____

Instruction: This form is required by Rules 12g-4, 12h-3 and 15d-6 of the General Rules and Regulations under the Securities Exchange Act of 1934. The registrant shall file with the Commission six copies of Form 15, one of which shall be manually signed. It may be signed by an officer of the registrant, by counsel or by any other duly authorized person. The name and title of the person signing the form shall be typed or printed under the signature.

Statutory Authority

The Commission is proposing the foregoing changes pursuant to Sections 12(h), 13(a), 15(d) and 23(a) of the Securities Exchange Act of 1934.

[Secs. 12(h), 13(a), 15(d), 23(a), 48 Stat. 892, 894, 895, 901; secs. 1, 3, 8, 49 Stat. 1375, 1377, 1379; secs. 203(a), 49 Stat. 704; sec. 202, 68 Stat. 686; secs. 3, 4, 6, 78 Stat. 565–568, 569, 570–574; secs. 1, 2, 82 Stat. 45; sec. 28(c), 84 Stat. 1435; secs. 8, 9, 10, 18, 89 Stat. 117, 118, 119, 155; sec. 308(b) 90 Stat. 57; secs. 202, 203, 204, 91 Stat. 1494, 1498, 1499, 1500; 15 U.S.C. 771, 78m, 78o(d), 78w(a)]

By the Commission.

George A. Fitzsimmons,
Secretary.

[FR Doc. 83-28192 Filed 10-17-83; 8:45 am]
BILLING CODE 8010-01-M

DEPARTMENT OF LABOR

Employment Standards Administration

20 CFR Part 10

Claims for Compensation Under the Federal Employees' Compensation Act, as Amended

AGENCY: Employment Standards Administration, Labor.

ACTION: Notice of proposed rulemaking; request for comments.

SUMMARY: The Department of Labor proposes to amend the regulations governing the administration of the Federal Employees' Compensation Act (FECA) to (1) clarify the procedure injured Federal employees and the employing agencies should follow in seeking and obtaining authorized medical treatment for job-related injuries; (2) specifically define which physicians, hospitals, etc., may be authorized under the FECA to provide and obtain payment from the Government for medical care and services to injured Federal employees; and (3) establish a procedure for excluding physicians, hospitals, etc., from participating in the program and for denying payment to such persons out of the Employees' Compensation Fund.

DATE: Written comments must be submitted on or before December 2, 1983.

ADDRESS: Send comments to Thomas M. Markey, Deputy Associate Director for Federal Employees' Compensation, Employment Standards Administration, U.S. Department of Labor, Room S-3229, Frances Perkins Building, 200 Constitution Avenue, NW., Washington, D.C., 20210; Telephone (202) 523-7552.

FOR FURTHER INFORMATION CONTACT: Thomas M. Markey, Deputy Associate Director for Federal Employees' Compensation, Employment Standards Administration, U.S. Department of Labor, Room S-3229, Frances Perkins Building, 200 Constitution Avenue, NW., Washington, D.C. 20210; Telephone (202) 523-7552.

SUPPLEMENTARY INFORMATION: The Federal Employee's Compensation Act requires that Federal employees who sustain job-related injuries be provided with appropriate medical care and treatment. Such treatment must be furnished by or under the supervision and direction of a qualified physician "in accordance with such regulations and instructions as the Secretary considers necessary * * *" (5 U.S.C. 8103). Although the 1974 Amendments (Pub. L. 93-416) gave injured Federal employees the right to initially select a treating physician such selection and continued use of that physician was subject to the control and supervision of the Secretary of Labor.

The Secretary has not heretofore defined or limited the scope of the employee's choice much more narrowly than the definition of physician given in the statute. In the absence of regulations specifying under what circumstances an employee's choice of physician should be honored, the Office of Workers' Compensation Program (OWCP), which administers the FECA, has been hampered in its efforts to ensure that Federal employees receive quality medical care for work related injuries. The Office also has been hampered in its efforts to ensure that benefits paid from the Employees' Compensation Fund (and ultimately from the budget of constituent Federal employing agencies) are paid for legitimate, suitable medical treatment.

In Fiscal Year 1982, the Secretary authorized the payment of $125,300,000 for medical, surgical and related treatment, hospitalization, therapy, psychological and psychiatric care, medical supplies, and other covered services for Federal employees who suffered occupational injury or disease.

When abusive or fraudulent practices by medical providers are discovered, the Office has had to deal with such fraud or abuse on a case-by-case basis, and has lacked specific procedures to exclude the provider who has engaged in such practices from FECA program. In addition to outright fraud, there are certain practices which should be regulated in the interest of Federal employees and effective cost management of the program.

These practices tend to reduce the quality of medical care, and if tolerated open the program to wider abuses. These include: maintaining a double standard of fees for services, so that governmental benefit programs are charged more for the same service than private patients; continuing treatment in excess of what is generally regarded by peer and professional review committees to be sound medical practice; making false or deceptive statements in submitting bills for reimbursement; charging the patient a second time for fees already reimbursed by OWCP; and providing treatment which is substandard in quality.

Finally, because adjudication of entitlement to benefits is based on review of the written record by its administrative and medical staff, the Office wishes to exclude physicians who repeatedly fail to document treatment and its effects in full and accurate medical reports, and who fail to respond to the Office's requests for medical information about treatment rendered, and about the condition of the employee. Without medical information from the treating physician, the Office is unable to carry out its further reponsibilities of determining the employee's entitlement to wage-loss compensation; of managing medical care for the employee; and of providing suitable vocational rehabilitation for employees who suffer permanent disabilities.

Attention was directed to these problems at hearings held by the Permanent Subcommittee on Investigations of the Senate Committee on Governmental Affairs in 1981 and 1982. Both the subcommittee and the Inspector General of the Department of Labor have urged the Office to establish formal debarment procedures to more strictly control its medical program, reducing unnecessary and inappropriate expenditures and lessen fraud and abuse.

The Office of Workers' Compensation Programs has studied regulations which govern exclusion and suspension of providers published by the Health Care Financing Administration of the Department of Health and Human Services, and by several State Workers' Compensation programs. The regulations proposed below are designed to achieve better program management of medical benefits while giving full protection of due process procedures to physicians and providers of medical services and supplies. The proposed FECA regulations will define and regulate, to the extent appropriate, those persons who will be considered "duly qualified" and therefore authorized to provide medical care and treatment under the FECA Program. Only those services provided by "duly qualified physicians", "duly qualified hospitals", or "duly qualified providers of medical services or supplies" as defined in this proposal will be paid for by the Government out of the Employees' Compensation Fund established by 5 U.S.C. 8147.

In addition, a new Subpart F is proposed which will establish a procedure whereby physicians and other providers of medical services and supplies may be excluded from the program. The grounds for exclusion are set forth in the proposed § 10.450. Section 10.451 as proposed would automatically exclude those persons convicted of specified offenses as well as those who have been excluded or suspended, or who voluntarily resigned from participation in a Federal or State program for which payments are made for similar services or supplies. Since, in these kind of cases, the grounds for exclusion have already been established in a proceeding involving equivalent or greater procedural safeguards, no additional proceedings under this program are required prior to exclusion under these regulations.

The additional grounds for disqualification are directed toward actions directly related to the submission of bills or statements in connection with FECA claims, the quality and quantity of treatment and care given to injured Federal employees, and the charging of employees for services paid for by the Govenment. With respect to these grounds the proposed regulations provide for a notice to be given to the provider of the intent to exclude, an opportunity to submit a response, a decision by an official of the Office of Workers' Compensation Programs located in the area where the alleged improper activity occurred, and ultimately the opportunity for a hearing before an administrative law judge of the U.S. Department of Labor. The final decision will be issued by the Associate Director for Federal Employee's Compensation.

Reinstatement procedures are also established. Under § 10.457 as proposed reinstatement to participation in the FECA program is a matter of administrative discretion except where a criminal conviction is reversed or the exclusion or suspension from another Federal or State program has been reversed or withdrawn. In the latter case, reinstatement is automatic upon the submission of adequate proof thereof but without prejudice to the institution of separate proceedings under § 10.452 based upon the underlying facts.

Drafting Information

This document was prepared under the direction and control of Robert B. Collyer, Deputy Under Secretary for Employment Standards, U.S. Department of Labor, Room S-2321, 200 Constitution Avenue, NW., Washington, D.C. 20210; Telephone (202) 523-6191.

Classification—Executive Order 12291

The Department of Labor does not believe that the regulatory proposal constitutes a "major rule" under Executive Order 12291, because it is not likely to result in: (1) An annual effect on the economy of $100 million or more; (2) a major increase in cost or prices for consumers, individual industries, Federal, state or local government agencies, or geographic regions; or (3) significant adverse effects on competition, employment, investment, productivity, innovation, or the ability of United States-based enterprises to compete with foreign-based enterprises in domestic or export markets. Accordingly, no regulatory analysis is required.

Paperwork Reduction Act

The Office of Management and Budget has previously approved the record keeping requirements at 20 CFR 10.410(a); OMB Control No. 1215-0133. The proposed revision to § 10.410(a) contained in this document does not impose any new record keeping requirements.

Regulatory Flexibility Act

The Department believes that the rule will have "no significant economic impact upon a substantial number of small entities" within the meaning of section 3(a) of the Regulatory Flexibility Act. Pub. L. No. 96-354, 91 Stat. 1164 (5 U.S.C. 605(b)).

Although this rule will be applicable to small entities it should not result in or cause a significant economic impact to any small entity subject to its provisions. This conclusion is reached because the application of the exclusion procedures proposed by these rules will not reduce the amount of money paid to duly qualified medical providers for the medical services rendered to FECA beneficiaries but rather will permit the Department to determine which providers should participate in the program. The Secretary has certified to the Chief Counsel for Advocacy of the Small Business Administration to this effect. Accordingly, no regulatory impact analysis is required.

Regulatory Flexibility Act Certification

I, Raymond J. Donovan, Secretary of Labor, hereby certify, pursuant to 5 U.S.C. 605(b), that the proposed rules contained in 20 CFR Part 10 described in this document, will have "no significant economic impact upon a substantial number of small entities" within the meaning of section 3(a) of the Regulatory Flexibility Act. Although this rule will be applicable to small entities it should not result in or cause a significant economic impact to any small entitiy subject to its provisions. This conclusion is reached because the application of the exclusion procedures proposed by these rules will not reduce the amount of money paid to duly qualified medical providers for the medical services rendered to FECA beneficiaries but rather will permit the Department to determine which providers should participate in the program.

List of Subjects in 20 CFR Part 10

Claims, Government employees, Archives and records Health records, Freedom of Information, Privacy, Penalties, Health professions, Workers' compensation, Employment, Administrative practices and procedures, Wages, Health facilities, Dental health, Medical devices, Health care, Lawyers, Legal services, Student, X-rays, Labor, Insurance, Kidney

diseases, Lung diseases, and Tort claims.

PART 10—[AMENDED]

Accordingly, it is proposed that 20 CFR Part 10 be amended as set forth below.

Authority: (5 U.S.C. 301); Reorganization Plan No. 6 of 1950, 15 FR 3174, 64 Stat. 1263; (5 U.S.C. 8145, 8149); Secretary of Labor's Order No. 16–75, 40 FR 55913 Employment Standards' Order No. 78–1, FR 51469.

1. By revising § 10.137 to read as follows:

§ 10.137 Review by the Employee's Compensation Appeals Board.

Final decisions of the Office, except decisions concerning the nature and extent of medical services, the amounts payable for such services, and decisions concerning exclusion and reinstatement of medical providers, are subject to review by the Employees Compensation Appeals Board (ECAB), U.S. Department of Labor, under rules of procedure set forth in Part 501 of this title.

2. By redesignating § 10.401 as § 10.400 and revising it to read as follows:

§ 10.400 Physician and medical services, etc. defined

(a) The term "physician" as used in subparts E and F of this part includes physicians (M.D. and D.O.), surgeons, podiatrists, dentists, clinical psychologists, optometrists, and chiropractors, within the scope of their practice as defined by State Law. The term "physician" includes chiropractors only to the extent that their reimbursable services are limited to treatment consisting of manual manipulation of the spine to correct a subluxation as demonstrated by X-ray to exist. A physician whose license to practice medicine has been suspended or revoked by a State licensing or regulatory authority is not a physician within the meaning of this section during the period of such suspension or revocation.

(b) The term "duly qualified physician" as used in Subparts E and F of this part includes any physician, as defined by paragraph (a) of this section, who has not been excluded under the provisions of subpart F of this part. Except as otherwise provided by regulation, a duly qualified physician shall be deemed to be designated or approved by the Office.

(c) The term "duly qualified hospital" as used in subparts E and F of this part includes any hospital licensed as such under State law which has not been excluded under the provisions of subpart F of this part. Except as otherwise provided by regulation, a duly qualified hospital shall be deemed to be designated or approved by the Office.

(d) The term "duly qualified provider of medical support services or supplies" as used in Subparts E and F of this part includes any person, other than a physician or a hospital, who provides services, drugs, supplies, and appliances for which the Office makes payment who possesses any applicable licenses required under State law and who has not been excluded under the provisions of subpart F of this part.

(e) The term "medical services" as used in subparts E and F of this part includes services and supplies provided by or under the supervision of physicians (M.D. and D.O), surgeons, podiatrists, dentists, clinical psychologists, optometrists,and chiropractors, within the scope of their practices as defined by State law. Reimbursable chiropractic services are limited to treatment consisting of manual manipulation of the spine to correct a subluxation as demonstrated by x-ray to exist. Also included for payment or reimbursement are physical examinations (and related laboratory tests) and x-rays performed by or required by a chiropractor to diagnose a subluxation of the spinal column. A chiropractor may interpret his or her x-rays to the same extent as any other physician defined in this section.

(f) The term "hospital services" as used in subparts E and F of this part includes services and supplies provided by hospitals within the scope of their practice as defined by State law.

(g) The term "medical support services and supplies" as used in subparts E and F of this part includes services, drugs, supplies, and appliances provided by a person other than a physician or hospital.

(h) The term "job-related injury" as used in Subparts E and F of this part includes injuries sustained while in the performance of duty and diseases proximately caused by the conditions of employment.

3. By redesignating § 10.400 as § 10.401 and revising it to read as follows:

§ 10.401 Medical treatment, hospital services, transportation, etc.

(a) A claimant shall be entitled to receive all medical services, appliances or supplies which are prescribed or recommended by a duly qualified physician and which the Office considers necessary for the treatment of a job-related injury, whether or not the claimant is disabled. Such services, appliances and supplies may be furnished by, or on the order or recommendation of, either United States medical officers or hospitals, or, at the claimant's option as provided in paragraph (b) of this section, any other duly qualified physician or duly qualified hospital. Medical support services and supplies not furnished by a duly qualified physician or a duly qualified hospital shall be furnished by a duly qualified provider of medical support services or supplies. A claimant shall also be entitled to reimbursement of reasonable and necessary expenses incident to obtaining authorized medical services, appliances or supplies.

(b) A claimant has an initial choice of physicians. The employing agency shall give the claimant an opportunity to select a duly qualified physician, after advising the claimant of those physicians excluded under the provisions of this part. An employee who wishes to change physicians must submit a written request to the Office fully explaining the reasons for the request. The Office may approve the request in its discretion if sufficient justification is shown for the request. Any duly qualified physician shall be authorized to provide necessary treatment of a job-related injury in an emergency.

(c) The medical facilities of the U.S. Public Health Service generally are available at any time for the furnishing of medical treatment. The medical facilities of the Army, Navy, Air Force, and Veterans Administration may be used when previous arrangements have been made on a case-by-case basis with the director of the facility.

(d) Federal health service units or other occupational health service facilities established under the provisions of the Act of August 8, 1946, as amended (U.S.C. 7901), are not United States medical hospitals as used in this part, nor are the staff of these facilities United States medical officers as used in this part.

Under criteria established by the Bureau of the Budget (now the Office of Management and Budget) in Circular No. A–72 of June 18, 1965, these health service units or occupational health service facilities shall only provide emergency diagnosis and treatment of injury or illness such as are necessary during working hours and are within the competence of the professional staff of the health service unit or facility. Any medical treatments by these units or facilities other than emergency treatment must be specifically authorized by the Office and given under the supervision of a duly qualified physician.

(e) Nothing in the Act or in these regulations affects any authority which the employing agency may have to require the employee to undergo a medical examination to determine whether the employee meets the mandatory medical requirements of the position held, or is able to perform the duties of the position held.

(f) In emergency cases or those involving unusual considerations affecting the quality of medical care, the Office may authorize treatment or approve payment of medical expenses in a matter other than that provided in this subpart.

4. By revising § 10.402 to read to follows:

§ 10.402 Official authorization for treatment.

(a) When an employee sustains a job-related injury which may require medical treatment, the employing agency shall promptly authorize such treatment by giving the employee a properly executed CA-16. Form CA-16 shall be used primarily for traumatic injuries. It may also be used to authorize examination and treatment for disease of illness, but only if the employing agency has obtained prior permission from the Office.

(b) To be valid, a Form CA-16 must give the full name and address of the duly qualified physician or duly qualified medical facility authorized to provide service, and must be signed and dated by the authorizing official, and must show his or her title. Except as provided in § 10.404, Form CA-16 may not be issued for past medical care. The period for which treatment is authorized by a correctly issued Form CA-16 is limited to 60 days from the date of issuance, unless terminated earlier by the Office. Further, in view of the provisions of § 10.401(b), the employing agency may not use Form CA-16 to authorize a change of physicians.

(c) In determining the use of medical facilities, consideration must be given to their availability, the employee's condition, and the method and means of transportation. Generally, 25 miles from the place of injury, the employing agency, or the employee's home, is a reasonable distance to travel, but other pertinent factors must also be taken into consideration.

5. By redesignating § 10.405 as § 10.403 and revising to read as follows:

§ 10.403 Medical treatment in doubtful cases.

Cases of a doubtful nature, so far as compensability is concerned, shall be referred by the employing agency to a United States medical officer or hospital, or at the employee's option, to a duly qualified private physician or a duly qualified hospital designated or approved by the Office, or as otherwise provided in this part, using a Form CA-16 for medical services as indicated in 6B of the form. This authorizes the necessary diagnostic studies and emergency treatment pending receipt of advice from the Office. A statement of all pertinent facts relating to the particular case shall also be forwarded immediately to the Office for consideration. If the medical examination or other information received subsequent to the issuance of authorization for treatment discloses that the condition for which treatment was rendered is not due to an injury, the person issuing the authorization shall immediately notify the employee and the physician or hospital that no further treatment shall be rendered at the expense of the Office. In cases of an emergency or cases involving unusual circumstances, the Office may, in the exercise of its discretion, authorize treatment otherwise than as provided for in this part, or it may approve payment for medical expenses incurred otherwise than as authorized in this section. No authority for examination or for medical or other treatment shall be given by the employing agency in any case already disallowed by the Office.

6. By redesignating § 10.403 as § 10.404 and revising it to read as follows:

§ 10.404 Emergency treatment.

In cases of traumatic injury where emergency treatment is necessary, any duly qualified physician may render initial treatment. If oral authorization for such treatment is given by the employing agency, a Form CA-16 shall be issued within 48 hours thereafter. If further treatment is necessary, authorization therefor shall be requested as soon as practicable in accordance with § 10.402 of this part. It is the duty of the employing agency to authorize initial medical treatment for acute injuries, exclusive of disease or illness, and to transfer the employee at the employee's option to the care of a local U.S. medical officer or hospital or to a duly qualified private physician or a duly qualified hospital designated or approved by the Office for any subsequent treatment needed. If unable to comply promptly with this requirement, the employing agency shall communicate with the Office for instructions.

7. By redesignating § 10.404 as § 10.405 and revising it to read as follows:

§ 10.405 Medical treatment if symptoms or disability recur.

If, after having been discharged from medical treatment, an injured employee again has symptoms or disability under circumstances from which it may reasonably be inferred that such symptoms or disability are the result of an injury previously recognized as compensable by the Office, and the place of employment is the same as at the time of injury, Form CA-16 may be issued at the discretion of the employing agency. Form CA-16 shall not be used by the employing agency if more than six months have elapsed since the employee last returned to work. In any case in which there may be doubt that the symptoms or disability are the result of the injury, or in which it has been more than six months since the last return to work, the employing agency shall communicate with the Office and request instructions, stating all the pertinent facts. In all other cases, the employee shall communicate with the Office and request such treatment.

8. By revising § 10.406 to read as follows:

§ 10.406 Authority for dental treatment.

All necessary dental treatment, including repairs to natural teeth, false teeth, and other prosthetic dental devices, needed to repair damage or loss caused by an employment related injury shall be obtained at the employee's option from a U.S. Medical Officer or hospital, or from a duly qualified private dentist, a duly qualified physician, or a duly qualified hospital, upon authorization obtained in advance from the Office.

9. By revising § 10.407(a) to read as follows:

§ 10.407 Medical examinations.

(a) An injured employee shall be required to submit to examination by a U.S. Medical Officer or by a qualified private physician approved by the Office as frequently and at such times and places as in the opinion of the Office may be reasonably necessary. The injured employee may have a duly qualified physician, paid by him or her, present at the time of such examination For any examination required by the Office, an injured employee shall be paid all expenses incident to such examination which, in the opinion of the Office, are necessary and reasonable, including transportation and actual loss of wages incurred in order to submit to the examination authorized by the Office.

* * * * *

10. By revising § 10.409 to read as follows:

§ 10.409 Furnishing of orthopedic and prostheic appliances, and dental work.

When a job-related injury results in the need for an orthopedic or prosthetic appliance, such as an artificial limb, eye, or denture, as recommended by the duly qualified attending physician, written application for authority to purchase such appliance may be made to the Office. The application must include a statement from the attending physician regarding the need for the appliance, a brief description thereof, and the approximate cost.

11. By revising § 10.410(a) to read as follows:

§ 10.410 Recording and submission of medical reports.

(a) Medical officers and private physicians and hospitals shall keep adequate records of all cases treated by them under the Act so as to be able to supply the Office with a history of the employee's accident, the exact description, nature, location, and extent of injury, the X-ray findings or other studies, if X-ray examination or other studies have been made, the nature of the treatment rendered, and the degree of impairment arising from the injury.

* * * * *

12. By adding a new Subpart F as follows:

Subpart F—Exclusion of Physicians and Other Providers of Medical Services and Supplies

Sec.
10.450 Exclusion for fraud and abuse: Grounds.
10.451 Automatic exclusion.
10.452 Initiation of exclusion procedures.
10.453 Requests for a hearing.
10.454 Hearings and recommended decision.
10.455 Final decision.
10.456 Effects of exclusion.
10.457 Reinstatement.

Subpart F—Exclusion of Physicians and Other Providers of Medical Services and Supplies

Authority: (5 U.S.C. 301); Reorganization Plan No. 6 of 1950, 15 FR 3174, 64 Stat. 1263; (5 U.S.C. 8145, 8149); Secretary of Labor's Order No. 16–75, 40 FR 55913; Employment Standards' Order No. 78–1, 43 FR 51469.

§ 10.450 Exclusion for fraud and abuse: Grounds.

A physician, hospital, or provider of medical support services or supplies shall be excluded from payment under the Act if such physician, hospital or provider has:

(a) Been convicted under any criminal statute for fraudulent activities in connection with any Federal or State program for which payments are made to providers for similar medical, surgical or hospital services, appliances or supplies;

(b) Been excluded or suspended, or has resigned in lieu of exclusion or suspension, from participation in any Federal or State program referred to in paragraph (a) of this section.

(c) Knowingly made or caused to be made, any false statement or misrepresentation of a material fact in connection with a determination of the right to reimbursement under the Act, or in connection with a request for payment;

(d) Submitted, or caused to be submitted, three or more bills or requests for payment within a twelve-month period under this chapter containing charges which the Secretary finds to be substantially in excess of such provider's customary charges, unless the Secretary finds there is good cause for the bills or requests containing such charges;

(e) Knowingly failed to timely reimburse claimants for treatment, services or supplies furnished under this chapter paid by the Government;

(f) Persistently failed, neglected or refused to submit full and accurate medical reports, or to respond to requests by the Office for additional reports or information, as required by the Act and § 10.410 of this part;

(g) Knowingly furnished treatment, services or supplies which are substantially in excess of the claimant's needs, or of a quality which fails to meet professionally recognized standards.

§ 10.451 Automatic exclusion.

If a physician, hospital, or provider of medical support services or supplies has been convicted of any crime enumerated in § 10.450, or has been excluded or suspended, or has resigned in lieu of exclusion or suspension, from participation in any program referred to in § 10.450, such physician, hospital, or provider of medical support services or supplies shall be automatically excluded from participating in the program and from seeking payment under the Act for services performed after the date of the entry of the judgment of conviction or order of exclusion, suspension or resignation, as the case may be, by the court or agency concerned. Proof of the conviction, exclusion, suspension or resignation may be by a copy thereof authenticated by the seal of the court or agency concerned.

§ 10.452 Initiation of exclusion procedures.

(a) *General provision.* Upon receipt of information indicating that a physician, hospital or provider of medical support services or supplies (hereinafter the provider) has engaged in activities enumerated in § 10.450, the Assistant Regional Administrator, after completion of inquiries he/she deems appropriate, may initiate procedures to exclude the provider from participation in the FECA program. For the purposes of this section, "Assistant Regional Administrator" may include any officer designated to act on his or her behalf.

(b) *Letter of intent.* The exclusion procedure shall be initiated by sending a letter, signed by the Assistant Regional Administrator, stating his or her intention to commence proceedings to exclude the provider. The letter shall be sent by certified mail, return receipt requested and shall contain the following:

(1) A concise statement of the grounds upon which exclusion shall be based;

(2) A summary of the information, with supporting documentation, upon which the Assistant Regional Administrator has relied in reaching an initial decision that exclusion proceedings should be commenced;

(3) An invitation to the provider to:

(i) Resign voluntarily from participation in the FECA program without admitting or denying the allegations presented in the letter; or

(ii) Request that the decision on exclusion be based upon the existing record and any additional documentary information the provider may wish to provide;

(4) A notice of the provider's right, in the event of an adverse ruling by the Assistant Regional Administrator, to request a formal hearing before an administrative law judge;

(5) A notice that should the provider fail to answer (as described below) the letter of intent within 30 calendar days of receipt, the Assistant Regional Administrator may deem the allegations made therein to be true and may order exclusion of the provider without conducting any further proceedings; and

(6) The name and address of the official representative of the Office who shall be responsible for receiving the answer from the respondent.

(c) *Answer to the letter of intent.* The provider's answer shall be in writing and shall include an answer to the Office's invitation to resign voluntarily. If the provider does not offer to resign, he or she shall request that a determination be made upon the

existing record and any additional information provided.

(d) *Failure to answer.* Should the provider fail to answer the letter of intent within 30 calendar days of receipt, the Assistant Regional Administrator may deem the allegations made therein to be true and may order exclusion of the provider.

(e) *Inspection of the record.* By arrangement with the official representative, the provider may inspect or request copies of information in the record at any time prior to the Assistant Regional Administrator's decision.

(f) *Decision.* The Assistant Regional Administrator shall issue his or her decision in writing, and shall send a copy of the decision to the provider by certificated mail, return receipt requested. The decision shall advise the provider of his or her right to request, within 30 days of the date of the adverse decision, a formal hearing before an administrative law judge under the procedures set forth below. The filing of a request for a hearing within the time specified shall operate to stay the effectiveness of the decision to exclude.

§ 10.453 Requests for a hearing.

(a) A Request For Hearing shall be sent to the official representative (see § 10.452(b)(6)) and contain:

(1) A concise notice of the issues on which the provider desires to give evidence at the hearing.

(2) Any request for a more definite statement by the Office.

(3) Any request for the presentation of oral argument or evidence.

(4) Any request for a certification of questions concerning professional medical standards, medical ethics or medical regulation for an advisory opinion from a competent recognized professional organization or Federal, State or Local regulatory body.

(b) If a Request For Hearing is timely received by the designated official representative, the official representative shall refer the matter to the Chief Administrative Law Judge of the Department of Labor, who shall assign it for an expeaited hearing. The administrative law judge assigned to the matter shall consider the Request for Hearing, act on all requests therein, and issue a Notice of Hearing and Hearing Schedule for the conduct of the hearing. A copy of the hearing notice shall be served on the provider by certified mail, return receipt requested. The Notice of Hearing and Hearing Schedule shall include:

(1) A ruling on each item raised in the Request For Hearing;

(2) A schedule for the prompt disposition of all preliminary matters including requests for more definite statements and for the certification of questions to advisory bodies;

(3) A scheduled hearing date not less than thirty days after the date the schedule is issued, and not less than fifteen days after the scheduled conclusion of preliminary matters, provided that the specific time and place of the hearing may be set on ten days notice.

(c) The purpose of the designation of issues is to provide for an effective hearing process. The provider is entitled to be heard on any matter placed in issue by his or her response to the Notice of Intent to Exclude, and may designate "all issues" for purposes of hearing. However a specific designation of issues is required if the provider wishes to interpose affirmative defenses, or request the issuance of subpoenas or the certification of questions for an advisory opinion.

(d) The provider may make application for the issuance of subpoenas upon a showing of good cause therefor to the administrative law judge.

(e) A certification of the request for an advisory opinion concerning professional medical standards, medical ethics or medical regulation to a competent recognized or professional organization or Federal, State or local regulatory agency may be made:

(1) As to an issue properly designated by the provider, in the sound discretion of the administrative law judge, provided that the request will not unduly delay the proceedings;

(2) By the Office on its own motion either before or after the institution of proceedings, and the results thereof shall be made available to the provider at the time that proceedings are instituted or, if after the proceedings are instituted, within a reasonable time after receipt; provided, that the opinion, if rendered by the organization or agency, is advisory only and not binding on the administrative law judge.

§ 10.454 Hearings and recommended decision.

(a) Except as hereafter provided, the administrative law judge conducting a hearing pursuant to this subpart, shall not be bound by common law or statutory rules of evidence or procedure, or by section 5 of the Administrative Procedure Act, but may conduct the hearing in a manner best calculated to ascertain the facts and to do substantial justice in a speedy and effective manner. To the extent appropriate proceedings before the administrative law judge shall be governed by 29 CFR Part 18 (promulgated July 15, 1983, at 48 FR 32538).

(b) The administrative law judge shall receive such relevant evidence as may be adduced at the hearing. Evidence shall be presented under oath, orally or in the form of written statements. The administrative law judge shall consider the Notice and Response, including all pertinent documents accompanying them, and may also consider any evidence which refers to the provider or to any claim with respect to which the provider has provided medical services, hospital services, or medical support services and supplies, and such other evidence as the administrative law judge may determine to be necessary or useful in evaluating the matter.

(c) All hearings shall be recorded, and the original of the complete transcript shall become a permanent part of the official record of the proceedings.

(d) Pursuant to 5 U.S.C. 8126, the administrative law judge may:

(1) Issue subpoenas for and compel the attendance of witnesses within a radius of 100 miles;

(2) Administer oaths;

(3) Examine witnesses; and

(4) Require the production of books, papers, documents, and other evidence with respect to the proceedings.

(e) At the conclusion of the hearing a written recommended decision of the administrative law judge shall be issued and, together with the official record, shall be certified to the Associate Director for Federal Employees' Compensation, OWCP, Washington, D.C. 20210. A copy of the decision shall be mailed to the provider by certified mail, return receipt requested. It shall include a statement advising the provider of the right to submit written comments on the decision to the Associate Director within 20 days of receipt of the decision.

§ 10.455 Final decision.

(a) The Associate Director, after receiving the record, the recommended decision of the administrative law judge and any comments submitted by the provider, shall issue a decision either excluding the provider from the program or dismissing the proceedings.

(b) The decision of the Associate Director shall be final with respect to the provider's participation in the program, and shall not be subject to further review by any court or agency.

§ 10.456 Effects of exclusion.

(a) The Office shall give notice of the exclusion of a physician, hospital, or provider of medical support services or supplies to:

(1) All OWCP district offices;

(2) All employing Federal agencies;

(3) The Health Care Financing Administration;

(4) The State or Local authority responsible for licensing or certifying the excluded party;

(5) All claimants who are known to have had treatment, services or supplies from the excluded person within the six month period immediately preceding the order of exclusion.

(b) Nothwithstanding any exclusion of a physician, hospital, or provider of medical support services or supplies under this subpart, the Office shall not refuse a claimant reimbursement for any otherwise reimbursable medical treatment, service or supply if:

(1) Such treatment, service or supply was rendered in an emergency by an excluded physician; or

(2) Claimant could not reasonably have been expected to have known of such exclusion.

§ 10.457 Reinstatement.

(a) If a physician, hospital, or provider of medical support services or supplies has been automatically exluded pursuant to § 10.451, the person exluded will automatically be reinstated upon notice to the Office that the conviction or exclusion which formed the basis of the automatic exclusion has been reversed or withdrawn. However, an automatic reinstatement shall not preclude the Office from instituting exclusion proceedings based upon the underlying facts of the matter.

(b) a physician, hospital, or provider of medical support services or supplies excluded from participation as a result of an order issued pursuant to this subpart may apply for reinstatement one year after the entry of the order of exclusion, unless the order expressly provides for a shorter period. An application for reinstatement shall be addressed to the Associate Director for Federal Employees' Compensation, and shall contain a concise statement of the basis for the application. The application should be accompanied by supporting documents and affidavits.

(c) A request for reinstatement may be accompanied by a request for oral argument. Oral argument will be allowed only in unusual circumstances where it will materially aid the decisional process.

(d) The Associate Director shall order reinstatement only in instances where such reinstatement is clearly consistent with the ultimate goal of this subpart which is to protect the FECA program against fraud and abuse. To satisfy this requirement the provider must provide reasonable assurances that the basis for the exclusion will not be repeated.

Signed at Washington, D.C., this 13th day of October 1983.

Raymond J. Donovan,

Secretary of Labor.

[FR Doc. 83-28273 Filed 10-17-83; 8:45 am]

BILLING CODE 4510-27-M

DEPARTMENT OF THE TREASURY

Internal Revenue Service

26 CFR Part 1

[LR-214-81]

Credit for Expenses for Household and Dependent Care Service Necessary for Gainful Employment

Correction

In FR Doc. 83-24570 beginning on page 40528 in the issue of Thursday, September 8, 1983, make the following corrections:

§ 1.44A-1 [Corrected]

On page 40529, column two, § 144A-1(c)(4), line seven should end with two dashes, "——".

2. On the same page, column two, § 144A-1(c)(5), line seven, remove the colon, and add two dashes "——".

3. On the same page, column three, add § 144A-1(c) (6) and (7) beneath the undesignated paragraph of § 1.44A-1(c)(5)(ii) as follows:

(6) Allocation of expenses. * * *

(7) Illustrations. * * *

§ 1.44A-2 [Corrected]

4. On page 40530, column one, § 1.44A-2(b)(3), line nine, remove the colon and add two dashes "——".

5. On the same page, column one, § 1.44A-2(b)(3)(i)(A), line five, "of" should read "or".

6. On the same page, column two, § 1.44A-2(b)(4) *"Example (1)"* lines three through twelve should be corrected to read as follows:

Employment-related expenses incurred during taxable year ($4,000, but limited to $2,400 by paragraph (a)(1) of this section	$2,400
Application of paragraph (b)(1)(ii) of this section (employment-related expenses, may not exceed wife's earned income of $1,500)	$1,500
Employment-related expenses taken into account	$1,500

7. On the same page, column two, § 1.44A-2(b)(4) *"Example (2)"* lines nine through eighteen should be corrected to read as follows:

Employment-related expenses incurred during taxable year ($4,000, but limited to $2,400 by paragraph (a)(1) of this section	$2,400
Application of paragraph (b)(3) of this section (employment-related expenses, may not exceed wife's earned income of $1,800) ($200×9)	$1,800
Employment-related expenses taken into account	$1,800

BILLING CODE 1505-01-M

26 CFR Parts 1 and 5f

Sanctions on Issuers and Holders of Registration-Required Obligations Not In Registered Form

Correction

In FR Doc. 83-24071 beginning on page 39953 in the issue of Friday, September 2, 1983, make the following corrections:

1. On page 39955, column one, paragraph one, line fifteen, "section 1282(c)" should read "section 1232(c)".

§ 1.163-5 [Corrected]

2. On page 39956, column three, § 1.163-5(c)(2)(vi), line one, "from" should read "form".

§ 1.165-12 [Corrected]

3. On page 39958, column one, § 1.165-12(b)(3)(iii), line nine, insert "number of the obligation disposed of (if known)," between "(CUSIP)," and "gross".

§ 1.1232-5 [Corrected]

4. On the same page, column two, § 1.1232-5(b)(1), line nine, "low" should read "law".

BILLING CODE 1505-01-M

DEPARTMENT OF THE INTERIOR

Office of Surface Mining Reclamation and Enforcement

30 CFR Part 917

Public Comment and Opportunity for Public Hearing on the Modification to the Kentucky Permanent Regulatory Program

AGENCY: Office of Surface Mining Reclamation and Enforcement (OSM), Interior.

ACTION: Proposed rule.

SUMMARY: OSM is announcing procedures for the public comment period and for a public hearing on the substantive adequacy of a certain program amendment submitted by the State of Kentucky as a modification to the Kentucky Permanent Regulatory program (hereinafter referred to as the Kentucky program) under the Surface Mining Control and Reclamation Act of

1977 (SMCRA). The amendment pertains to changes in Kentucky's regulations for surface coal mining and reclamation operations on steep slopes.

This notice sets forth the times and locations that the Kentucky program and the proposed amendment are available for public inspection, the comment period during which interested persons may submit written comments on the proposed program elements, and the procedures that will be followed regarding the Public hearing.

DATES: Written comments must be received on or before 4:00 p.m., November 17, 1983 to be considered.

If requested, a public hearing on the proposed modifications will be held on November 14, 1983 beginning at the location shown below under **ADDRESSES.**

ADDRESSES: Written comments should be mailed or hand delivered to: W. H. Tipton, Director, Lexington Field Office, Office of Surface Mining, 340 Legion Drive, Suite 28, Lexington, Kentucky 40504.

If a public hearing is held its location will be at: The Harley Hotel, 2143 North Broadway, Lexington, Kentucky 40505.

FOR FURTHER INFORMATION CONTACT: W. H. Tipton, Director, Lexington Field Office, 340 Legion Drive, Suite 28, Lexington, Kentucky 40504. Telephone: (606) 233-7320.

SUPPLEMENTARY INFORMATION:

I. Public Comment Procedures

Availability of Copies

Copies of the Kentucky program, the proposed modifications to the program, a listing of any scheduled public meetings and all written comments received in response to this notice will be available for review at the OSM Offices and the Office of the State regulatory authority listed below, Monday through Friday, 8:00 a.m. to 4:00 p.m., excluding holidays.

Lexington Field Office, Office of Surface Mining, 340 Legion Drive, Suite 28, Lexington, Kentucky 40504

Office of Surface Mining, Reclamation and Enforcement, Room 5315, 1100 "L" Street, NW., Washington, D.C. 20240

Bureau of Surface Mining, Reclamation and Enforcement, Capitol Plaza Tower, Third Floor, Frankfort, Kentucky 40601

Written Comments

Written comments should be specific, pertain only to the proposed in this rulemaking, and include explanations in the support of the commenter's recommendations. Comments received after the time indicated under **DATES** or at locations other than Lexington, Kentucky, will not necessarily be considered and included in the Administrative Record for the final rulemaking.

Public Hearing

Persons wishing to comment at the public hearing should contact the person listed under **FOR FURTHER INFORMATION CONTACT** by the close of business *five* working days before the date of the hearing. If no one requests to comment at the public hearing, the hearing will not be held.

If only one person requests to comment, a public meeting, rather than a public hearing, may be held and the results of the meeting included in the Administrative Record.

Filing of a written statement at the time of the hearing is requested and will greatly assist the transcriber. Submission of written statements in advance of the hearing will allow OSM officials to prepare appropriate questions.

The public hearing will continue on the specified date until all persons scheduled to comment have been heard. Persons in the audience who have not been scheduled to comment and wish to do so will be heard following those schedule. The hearing will end after all persons scheduled to comment and persons present in the audience who wish to comment, have been heard.

Public Meeting

Persons wishing to meet the OSM representatives to discuss the proposed amendment may request a meeting at the OSM office listed in **ADDRESSES** by contacting the person listed under **FOR FURTHER INFORMATION CONTACT.**

All such meetings are open to the public and, if possible, notices of meetings will be posted in advance in the Administrative Record. A written summary of each public meeting will be made a part of the Administrative Record.

II. Background on the Kentucky State Program

On December 30, 1981, Kentucky resubmitted its proposed regulatory program to OSM. On April 13, 1982, following a review of the proposed program as outlined in 30 CFR Part 732, the Secretary approved the program subject to the correction of 12 minor deficiencies. The approval was effective upon publication of the notice of conditional approval in the May 18, 1982 **Federal Register** (47 FR 21404-21435).

Information pertinent to the general background, revisions, modifications, and amendments to the proposed permanent program submission, as well as the Secretary's findings, the dispostion of comments and a detailed explanation of the conditions, of approval of the Kentucky program can be found in the May 18, 1982 **Federal Register** notice.

III. Submission of program amendment

By a letter dated September 20, 1983, Kentucky submitted to OSM pursuant to 30 CFR 732.17, certain revisions to its regulations for steep slope mining practices.

The revised regulations were promulgated under Kentucky's emergency regulation procedures and became effective September 19, 1983. Under 30 CFR 732.17, the state must submit to OSM any change to its regulations in proposed form by a program amendment. OSM must announce the amendment to the public and provide for a public comment period before approving or disapproving the program amendment. OSM cannot consider the regulations as effective or as part of Kentucky's approved regulatory program until such time as the amendment has been approved by the Director.

In the amendment, Kentucky proposes to renumber the paragraphs contained in Section 2 of KAR 405 20:060E.

Additionally, Kentucky proposes to add new language pertaining to granting variances in certain cases from the approximate original contour and highwall elimination requirements. The amendment explains further that when a variance is granted, the highwall shall be eliminated to the maximum extent technically practical in accordance with certain criteria defined in the revised regulation.

Kentucky indicates that the modification is being made to conform with the revised Federal regualtions published in the **Federal Register** dated November 12, 1982 (47 FR 51316).

The Secretary seeks a public comment on these proposed modifications to the Kentucky program. If these amendments are approved, they will become part of the Kentucky program.

Procedural Matters

1. *Compliance with the National Environmental Policy Act:* The Secretary has determined that, pursuant to Section 702(d) of SMCRA, 30 U.S.C. 1292(d), no environmental impact statement need be prepared on this rulemaking.

2. *Executive Order No. 12291 and the Regulatory Flexibility Act:* On August 28, 1981, the Office of Management and Budget (OMB) granted OSM an exemption from Sections 3, 4, 7, and 8 of Executive Order 12291 for actions

directly related to approval or conditional approval of State regulatory programs. Therefore, this action is exempt from preparation of a Regulatory impact Analysis and regulatory review by OMB.

The Department of the Interior has determined that this rule would not have a significant economic effect on a substantial number of small entities under the Regulatory Flexibility Act (5 U.S.C. 601 *et seq.*). This rule would not impose any new requirements; rather, it would ensure that existing requirements established by SMCRA and the Federal rules will be met by the State.

3. *Paperwork Reduction Act:* This rule does not contain information collection requirements which require approval by the Office of Management and Budget under 44 U.S.C. 3507.

List of Subjects in 30 CFR Part 917

Coal mining, Intergovernmental relations, Surface mining, Underground mining.

(Pub. L. 95-87, Surface Mining Control and Reclamation Act of 1977 (30 U.S.C. 1201 *et seq.*))

Dated: October 13, 1983

J. R. Harris,

Director, Office of Surface Mining.

[FR Doc. 83-28283 Filed 10-17-83; 8:45 am]

BILLING CODE 4310-05-M

National Park Service

36 CFR Part 7

Rocky Mountain National Park, Colorado; Fishing Regulations

AGENCY: National Park Service, Interior.

ACTION: Proposed rule.

SUMMARY: This revision will permit the taking of greenback cutthroat trout, a threatened species, on a catch-and-release basis in certain waters where secure populations are present. Studies and consultation with the Greenback Recovery Team and other agencies indicate that this will enhance the visitor experience in the park without significant effect on these fish populations. The amendment to the possession limit will continue to allow a total of 8 fish in possession, but 6 of these will have to be brook trout. The other two can be cutthroat (other than greenback cutthroat no possession of these trout are allowed), rainbow or brown trout 10 inches or more in length. This change will reduce the take of younger immature fish of these species, allowing a more natural age structure with more larger fish, which should improve the quality of angling. The establishment of special management areas where native trout have been restored will allow more flexibility in management actions as the status of populations change. This eventually will result in more opportunities for angling on these populations as they become established and secure. The number of permanently closed waters will be reduced to two.

DATES: Written comments, suggestions or objections will be accepted until November 17, 1983.

ADDRESS: Comments should be directed to: Superintendent, Rocky Mountain National Park, Estes Park, Colorado 80517.

FOR FURTHER INFORMATION CONTACT:

David R. Stevens, Research Biologist, Rocky Mountain National Park, Estes Park, Colorado 80517, Telephone: (303) 587-2371

or

David J. Essex, Chief Park Ranger, Rocky Mountain National Park, Estes Park, Colorado 80517, Telephone: (303) 586-2371

SUPPLEMENTARY INFORMATION:

Background

The National Park Service, working with the U.S. Fish and Wildlife Service, the Colorado Division of Wildlife and the Greenback Trout Recovery Team, has made considerable progress toward restoration of the greenback trout to a non-threatened status. Research indicates that certain waters can now be opened to allow appreciation by the visiting public through catch-and-release fishing and still give adequate protection to the populations. This action has been approved as promoting conservation of the species by the Fish and Wildlife Service through consulation on April 23, 1982, as required by Section 7 of the 1973 Endangered Species Act. The Colorado Division of Wildlife has also endorsed catch-and-release fishing as best complementing their objectives at this time.

Three drainages are recommended for catch-and-release fishing. The Big Thompson River in Forest Canyon has a native population, very secure and protected from over-exploitation by isolation. The Fay Lake drainage, which includes the Caddis Lake population, was rehabilitated and stocked with greenback from the Big Thompson population in 1959. The Hidden Valley Beaver Ponds in which greenback trout were restored in 1973, are also protected by isolation. The other greenback trout populations have been established more recently and are not secure enough to provide this use.

However, with a system of management that will allow the flexibility in opening, closing, catch-and-release or other management strategies, it is believed that these waters can be utilized in the near future to provide considerable recreation angling without significant impact on the population status. The special management areas are proposed, therefore, to meet this need. Careful monitoring of these populations as they develop will allow opening when possible; any changes in status would be documented and changes in the management could be made before permanent damage to the populations were incurred. The alternative to this management status is for them to remain closed to fishing indefinitely.

Research indicates that wild populations on non-native cutthroat trout in lower elevation streams and lakes are being depressed by present levels of angling. These fish in some cases are being harvested too heavily and often prior to attaining maturity and reproducing. With the increased restrictions on the take of these fish, it is believed that a more natural age structure can be obtained which will result in larger fish and a higher quality fishery. These are low density will populations depending on natural reproduction to maintain numbers. The overall effect of these regulations would not reduce the angling opportunities or reduce the take significantly. Brook trout, which dominate 21 of 43 lakes with fish in the park, presently form 87% of the catch as determined by a 1976 survey. Since the brook trout is highly competitive and can reproduce under less than optimal conditions, it has increased in most areas under fishing pressure that cause other species to decline.

This revision relaxes existing regulations concerning fishing for greenback cutthroat trout and permits anglers the experience of catching-and-releasing native cutthroat trout—this opportunity has previously not been possible due to the fact that this species was on the endangered species list. It has since been reclassified as a threatened species. The National Park Service, working with the U.S. Fish and Wildlife Service, the Colorado Division of Wildlife, and the Greenback Trout Recovery Team, has made considerable progress toward restoration of the greenback trout to a non-threatened status. Research indicates that certain waters can now be open to allow appreciation by the visiting public through catch-and-release fishing and

still give adequate protection to the populations.

Public Participation

In order to get public input and to assess ecological effects, a pilot program was conducted on Hidden Valley Creek in 1982. This program was considered successful, and no adverse comment was received. Fishermen wishing to take advantage of the less restricted fishing opportunities did not suggest that the program be altered or not implemented. No significant opposition to the revision is expected, since its implementation is not expected to interfere with any public or private interests. Therefore, public comment on this proposed revision is expected to be minimal and supportive.

The size limitation and number in possession limitation of cutthroat species other than greenback cutthroat trout (Colorado River cutthroat and Yellowstone cutthroat), rainbow trout, and brown trout does impose an additional restriction on the public. However, through informal contact with the fishing public it is expected that this restriction will be supported by the public since it should improve the quality of angling. Brook trout by far provide the major portion of fishing in the park at present, and this will not change with these limitations. Fishing is not an important activity for the majority of visitors to Rocky Mountain National Park. It is estimated that less than 2 percent of park visitors fish within the park.

This action has been approved as promoting conservation of the species by the Fish and Wildlife Service. The Colorado Division of Wildlife has also endorsed catch-and-release fishing as best complementng their objectives at this time. Liaison has also been maintained with Trout Unlimited and other special interest groups.

Drafting Information

The following persons participated in the writing of these regulations: David R. Stevens, Research Biologist; David J. Essex, Chief Park Ranger, of Rocky Mountain National Park.

Paperwork Reduction Act

This rule does not contain information collection requirements which require approval by the Office of Management and Budget under 44 U.S.C. 3501 *et seq.*

Compliance With Other Laws

The Department of the Interior has determined that this document is not a "major rule" under Executive Order 12291 and certifies that this document would not have a "significant economic effect on a substantial number of small entities" under the Regulatory Flexibility Act (5 U.S.C. 601 *et seq.*). This conclusion is based on the finding that no more than a few sporting goods outlets might experience a limited increase in business due to expanded fishing opportunities.

Pursuant to the National Environmental Policy Act, 42 U.S.C. 4332, the Service has prepared an environmental assessment on this proposed regulation which is available at the address noted above.

Authority

Section 3 of the Act of August 25, 1916, 39 Stat. 535, as amended; 16 U.S.C. 3.

List of Subjects in 36 CFR Part 7

National parks.

In consideration of the foregoing, it is proposed to revise § 7.7(a) of Title 36, Code of Federal Regulations, to read as follows:

§ 7.7 Rocky Mountain National Park.

(a) *Fishing*—(1) *Possession limit:* Possession limit shall mean the numbers, sizes, or species of fish that may be in the possession of a person regardless if fresh or preserved.

(i) No person may have in his possession more than 8 fish of which at least 6 must be brook trout. The other two fish can be cutthroat (other than greenback cutthroat trout), rainbow or brown trout and must be 10 inches or more in length. In addition, 10 brook trout under 8 inches in length may be possessed. No greenback cutthroat trout of any size may be in possession at any time.

(ii) All fish a person does not elect to keep, or which do not meet the possession requirements, and all greenback cutthroat trout caught shall be carefully and immediately returned to the waters from which they were taken.

(2) *Methods of angling.* Only artificial flies or lures with one (single, double or treble) hook with a common shank may be used for angling in park waters open to fishing, except that children 12 years of age and under may possess and use natural bait in all park waters open to fishing, except waters where only catch-and-release fishing is permitted.

(i) Only artifical flies or lures having one barbless hook may be used for angling in catch-and-release waters.

(ii) The possession or use for fishing purposes of natural bait, including worms, isects, fish eggs, or any parts thereof, is prohibited, except as provided in paragraph (a)(2) of this section for children 12 years of age and under.

(3) *Water closed to fishing.* (i) Outlet waters and pools of the Lake Nanita outlet, from the lakeshore to a point 100 yards downstream.

(ii) Bear Lake.

(4) *Special management Areas.* The following restored native trout waters are designated as special management areas. These waters may be open or closed to catch-and-release fishing by the superintendent based on special management, research, or habitat protection needs, following the conspicuous posting of signs and publication of notices in local newspapers. They are closed to all fishing unless designated otherwise.

(i) West Creek.

(ii) Ouzel Lake and Ouzel Creek.

(iii) Fern Lake and fern Creek Drainage.

(iv) Timber Lake and Timber Creek.

(v) Lawn Lake.

(vi) Roaring River.

(vii) North Fork of the Big Thompson River above Lost Falls.

(5) *Waters open to catch-and-release fishing.* (i) Hidden Valley Creek, from the beaver ponds at Hidden Valley to its confluence with Fall River.

(ii) Big Thompson River in Forest Canyon above its confluence with Spruce Creek.

(iii) Fay lake drainage, including Caddis Lake.

(iv) Special Management Areas, as provided in paragraph (a)(4) of this section, which are opened and posted for catch-and-release fishing by the superintendent, based on special management, research, or habitat protection needs.

* * * * * *

Dated: August 23, 1983.

G. Ray Arnett,

Assistant Secretary for Fish and Wildlife and Parks.

[FR Doc. 83-28256 Filed 10-17-83; 8:45 am]

BILLING CODE 4310-70-M

FEDERAL EMERGENCY MANAGEMENT AGENCY

44 CFR Part 65

National Flood Insurance Program; North Dakota; Withdrawal of Proposed Rule

AGENCY: Federal Emergency Management Agency.

ACTION: Withdrawal of proposed rule.

SUMMARY: The Federal Emergency Management Agency has erroneously published a proposed rule for modified base flood elevation determinations.

This notice will serve to delete that publication of the community listed in the table below. The proposed rule referenced a newspaper publication at which time a 90-day appeal period would be initiated. In fact, no 90-day appeal period was required for this community, as the revised Flood Insurance Rate Map (FIRM) did not change base flood elevations. This deletion, however, in no way affects the status of the revised FIRM. The commninty's revised FIRM is still in effect.

FOR FURTHER INFORMATION CONTACT: Dr. Brian R. Mrazik, Chief, Engineering Branch, Natural Hazards Division, Federal Emergency Management Agency, Washington, D.C. 20472 (202) 287-0230.

SUPPLEMENTARY INFORMATION: The table below lists the community affected by this deletion notice and the date, volume, and page number at which the proposed rule was published in the **Federal Register.**

Community	FEMA Docket No.	FEDERAL REGISTER Publication
North Dakota: City of Hazen, Mercer County.	6479	48 FR 681, Jan. 6, 1983.

List of Subjects in 44 CFR Part 65

Flood insurance, Flood plains.

(National Flood Insurance Act of 1968 (Title XIII of Housing and Urban Development Act of 1968), effective January 28, 1969 (33 FR 17804, Nov. 28, 1968), as amended; 42 U.S.C. 4001-4128; Executive Order 12127, 44 FR 19367; delegation of authority to Associate Director, State and Local Programs and Support)

Issued: September 26, 1983.

Dave McLoughlin,

Deputy Associate Director, State and Local Programs and Support.

[FR Doc. 83-28111 Filed 10-17-83; 8:45 am]

BILLING CODE 6718-03-M

44 CFR Part 67

[Docket No. FEMA-6560]

National Flood Insurance Program; Proposed Flood Elevation Determination; California et al.

AGENCY: Federal Emergency Management Agency.

ACTION: Proposed rule.

SUMMARY: Technical information or comments are solicited on the proposed base (100-year) flood elevations and proposed modified base flood elevations listed below for selected locations in the nation. These base (100-year) flood elevations are the basis for the flood plain management measures that the community is required to either adopt or show evidence of being already in effect in order to qualify or remain qualified for participation in the National Flood Insurance Program (NFIP).

DATES: The period for comment will be ninety (90) days following the second publication of this proposed rule in a newspaper of local circulation in each community.

ADDRESSES: See table below.

FOR FURTHER INFORMATION CONTACT: Dr. Brian R. Mrazik, Chief, Engineering Branch, Natural Hazards Division, Federal Emergency Management Agency, Washington, D.C. 20472 (202) 287-0230.

SUPPLEMENTARY INFORMATION: The Federal Emergency Management Agency gives notice of the proposed determinations of base (100-year) flood elevations and modified base flood elevations for selected locations in the nation, in accordance with Section 110 of the Flood Disaster Protection Act of 1973 (Pub. L. 93-234), 87 Stat. 980, which added Section 1363 to the National Flood Insurance Act of 1968 (Title XIII of the Housing and Urban Development Act of 1968 (Pub. L. 90-448)), 42 U.S.C. 4001-4128, and 44 CFR 67.4(a).

The elevations, together with the flood plain management measures required by section 60.3 of the program regulations, are the minimum that are required. They should not be construed to mean the community must change any existing ordinances that are more stringent in their flood plain management requirements. The community may at any time enact stricter requirements on its own, or pursuant to policies established by other Federal, State, or regional entities. These proposed elevations will also be used to calculate the appropriate flood insurance premium rates for new buildings and their contents and for the second layer of insurance on existing buildings and their contents.

Pursuant to the provisions of 5 U.S.C. 605(b), the Associate Director, to whom authority has been delegated by the Director, Federal Emergency Management Agency, hereby certifies that the proposed flood elevation determinations, if promulgated, will not have a significant economic impact on a substantial number of small entities. A flood elevation determination under Section 1363 forms the basis for new local ordinances, which, if adopted by a local community, will govern future construction within the flood plain area. The elevation determinations, however, impose no restriction unless and until the local community voluntarily adopts flood plain ordinances in accord with these elevations. Even if ordinances are adopted in compliance with Federal standards, the elevations prescribe how high to build in the flood plain and do not proscribe development. Thus, this action only forms the basis for future local actions. It imposes no new requirement; of itself it has no economic impact.

List of Subjects in 44 CFR Part 67

Flood insurance, Flood plains.

The proposed base (100-year) flood elevations for selected locations are:

PROPOSED BASE (100-YEAR) FLOOD ELEVATIONS

State	City/town/county	Source of flooding	Location	#Depth in feet above ground. *Elevation in feet (NGVD)
California	Watsonville (city), Santa Cruz County	Pajaro River	25 feet upstream from center of Main Street	*36
		Pajaro River—Without consideration of levee.	Intersection of Beach Street and Errington Road	*21
		Struve Slough	Intersection of Struve Slough and center of Harkins Slough Road.	*15
		Wastonville Slough	25 feet downstream from center of Lee Road	*15
		Salsipuedes Creek	Intersection of Salsipuedes Creek and State Highway 129.	*37
		Salsipuedes Creek—Without consideration of levee.	Intersection of Bridge Street and El Rio Street	*40

PROPOSED BASE (100-YEAR) FLOOD ELEVATIONS—Continued

State	City/town/county	Source of flooding	Location	#Depth in feet above ground. *Elevation in feet (NGVD)
		Corralitos Creek	950 feet northeast of intersection of Packard Avenue and Kadderly Lane along Packard Avenue.	*93

Maps are available for inspection at the Department of Planning, 250 Main Street, Watsonville, California 95076.
Send comments to the Honorable Ann Soldo, 250 Main Street, Watsonville, California 95076.

Connecticut	East Lyme, town, New London County	Long Island Sound	Entire shoreline of Long Island Sound within community.	*15
			Entire shoreline of Nantic Bay within community	*15
		Niantic River	Rope Ferry Road	*11
			Smith Street extended	*12
			Town Road extended	*13
			At U.S. Route 1	*11

Maps available for inspection at the East Lyme Town Hall, Niantic, Connecticut.
Send comments to Honorable Richard Lougge, First Selectman of East Lyme, P.O. Box 519, Niantic, Connecticut 06357.

Connecticut	Madison, town, New Haven County	Long Island Sound	Entire shoreline within community	*16
		Hammonasset River	At U.S. Route 1	*10
			At River Road	*10
			Approximately 1.26 miles upstream of River Road	*15
			Approximately 2.14 miles upstream of River Road	*17
			Upstream of Chestnut Hill Road	*52
			Approximately .66 mile upstream of Chestnut Hill Road	*85
			At confluence of Camp Laurelwood Brook	*120
			Approximately 1.0 mile downstream of State Route 80	*150
			Approximately 0.57 mile downstream of of State Route 80.	*180
			Downstream of State Route 80	*213
		Camp Laurelwood	At confluence with Hammonasset River	*120
			Approximately 0.5 mile upstream of confluence with Hammonasset River.	*131
			Approximately 0.8 mile upstream of confluence with Hammonasset River.	*140
			Upstream of Summer Hill Road	*185
		Bailey Creek	At Nathan Lane	*11
			Upstream of Salem Road	*12
			Upstream of Connecticut Turnpike	*17
		*Neck River	At confluence with East River	*12
			At Overshore East extended	*11
			Upstream of U.S. Route 1	*14
			Upstream of Conrail	*20
			Upstream of Green Hill Road	*28
			Upstream of Warpas road	*31
			Approximately 0.7 mile upstream of Warpas Road	*45
			Downstream of dam located just upstream of Opening Hill Road.	*68

Maps available for inspection at the Town Engineer's Office, Town Hall, Madison, Connecticut.
Send comments to Honorable Donald Lachance, First Selectman of the Town of Madison, Town Hall, Madison, Connecticut 06443.

Florida	Collier County (unincorporated areas)	Gulf of Mexico	Center of intersection of Burns Road and State Highway 90.	*5
			At the center of intersection of Poinciana Street and Tortuga Way.	*8
			At the center of intersection of Lombardy Lane and Thomasson Drive.	*10
			At the center of intersection of Plum Court and Landmark Street.	*12
			At the center of intersection of Ebert Lane and Ruppert Road.	*14
			Center of intersection of Mamie Street and Chokoloskee River on Chokoloskee Island.	*17
			Carr Island, in Morgan Bay	*19
			Northern tip of Coon Key in Gullivan Bay	*22

Maps available for inspection at Planning, Building and Zoning Department, 3301 E. Tamiami Trail, Naples, Florida.
Send comments to the Honorable C. R. Wimer, 3301 E. Tamiami Trail, Naples, Florida 33942.

Georgia	City of Brunswick, Glynn County	Atlantic Ocean/Brunswick River	At the intersection of Parkwood Drive and Glynn Avenue.	*16
			At the intersection of Newcastle Street and London Street.	*14
		Atlantic Ocean/Academy Creek	At the the intersection of 4th Street and Reynolds Street.	*14

Maps available for inspection at City Hall, 601 Gloucester Street, Brunswick Georgia 31530.
Send comments to Mayor R. L. Holtzendorf or Mr. Homer L Wilson, City Manager, City Hall, P.O. Box 550, Brunswick, Georgia 31520.

Georgia	Unincorporated areas of Camdem County	Atlantic Ocean	At the confluence of Point Peter Creek with St. Marys River.	*15
			Along the southeastern shoreline of Cumberland Island.	*16
			At the confluence of Brickhill River with Cumberland River.	*16
			At the confluence of Sandler Creek with Crooked River.	*17
			Along the northeastern shoreline of Cumberland Island	*18
			Just downstream of U.S. Route 95 along White Oak Creek.	*20

PROPOSED BASE (100-YEAR) FLOOD ELEVATIONS—Continued

State	City/town/county	Source of flooding	Location	#Depth in feet above ground. *Elevation in feet (NGVD)
		Atlantic Ocean/Satilla River	Just downstream of U.S. Route 95	*17
			At the confluence of Dover Creek with Stilla River	*20
Maps available for inspection at Camden County Commissioners Offices, County Branch Office) Woodbine, Georgia 31569.				
Send comments to Mr. Lamar Drury, Chairman, Camden County Commission, or Mr. Jack Scott, Building Inspector Inspector, Camden County Courthouse, P.O. Box 99, Woodbine, Georgia 31569.				
Georgia	Jekyll Island State Park Authority, Glynn County	Atlantic Ocean	At the intersection of River View Drive and Captain Wylly Road.	*13
			At the intersection of Major Horton Road and Beach View Drive.	*14
Maps available for inspection at Convention Center, Beachview Drive, Jekyll Island, Georgia 31521.				
Send comments to Mr. George Chamblis, Director, Jekyll Island Authority or Mr. Al Elfer, Director of Services and Development, 375 Riverview Drive, Jekyll Island, Georgia 31512.				
Georgia	City of Kingsland, Camden County	Atlantic Ocean/Little Catfish Stream.	100 feet Se of the intersection of Clark Bluff Road and Little Catfish Stream.	*12
		Atlantic Ocean	Just downstream of Clark Bluff Road along Catfish Creek.	**12
Maps available for inspection at City Hall, 115 South Railroad Avenue East, Kingsland, Georgia 31548.				
Send comments to Mayor Fred Sutton, Jr. or Dorothy Peoples, City Clerk-Finance Officer, City Hall, P.O. Box 397, Kingsland, Georgia 31548.				
Georgia	City of Macon-Bibb County	Ocmulgee River	Just upstream of Seaboard Coast Line Railroad	*297
			Just upstream of Southern Railway	*303
			Just downstream of Spring Street	*307
			Approximately 300 feet upstream of Arkwright Road Access.	*325
		Ocmulgee River (after levee overtopping).	Just west of intersection of Walker Road and Macon Levee.	*290
			At intersection of Lower Boundary Street and Southern Railway.	*292
			At intersection of Poplar Street and Walker Road	*298
Maps available for inspection at Mayor George Isreal's Office or Mr. Joe Withering, City Engineer, City Hall, Second and Poplar Streets. Maps are also available at the Bibb County Engineer's Office and The County Chairman's Office, County Courthouse, Macon, Georgia 31201.				
Send comments for the City of Macon to Mayor George Isreal or Mr. Joe Withering, City Engineer, City Hall, P.O. Box 247, Macon, Georgia. Comments for Bibb County may be sent to Mr. Emery Greene, Chairman, Bibb County Commission or Mr. Robert Fountain, County Engineer's Office, Bibb County Courthouse, Macon, Georgia 31201.				
Georgia	City of St. Marys, Camden County	Atlantic Ocean	At the confluence of Sweetwater Branch with North River.	*14
			At the confluence of Burrells Creek with St. Marys River.	*14
			At the confluence of North River with St. Marys River	*15
Maps available for inspection at City Hall, 418 Osborne street, St. Marys, Georgia 31558.				
Send comments to Mayor Ward Hernandez or Mr. Wiley King, Building and Zoning Administrator, City Hall, 418 Osborne Street, St. Marys, Georgia 31558.				
Georgia	City of Woodbine, Camden County	Atlantic Ocean /Satilla River	At the intersection of U.S. Route 17 and 8th Street	*14
Maps available for inspection at City Hall, 8th Street, Woodbine, Georgia 31569.				
Send comments to Mayor Donald Mitchell or Mr. George L. Hannaford, City Administrator, City Hall, P.O. Box 26, Woodbine, Georgia 31569.				
Illinois	(C) Warsaw, Hancock County	Mississippi River	About 4.0 miles downstream of confluence of Des Moines River.	*498
			About 0.7 mile upstream of confluence of Des Moines River.	*501
Maps available for inspection at the Office of the City Clerk, City Hall, 306 Main Street, Warsaw, Illinois.				
Send comments to Honorable James Clinton, Mayor, City of Warsaw, City Hall, 306 Main Street, Warsaw, Illinois 62379.				
Nevada	Ely (city, White Pine County	Gleason Creek	At the intersection of First and Aultman Streets	#1
		Murray Creek	At the intersection of North Street and Parker Avenue	#2
			At the intersection of Murry Street and Dickerson Avenue.	#1
			300 feet south on Murry Street from its intersection with Reilly Avenue.	*6,548
Maps available for inspection at the City Clerk's Office, City Hall, Ely, Nevada.				
Send comments to the Honorable Gary Harrison, P.O. Box 299, Ely, Nevada 89301.				
New Jersey	Edgewater, borough,Bergen County	Hudson River	Entire shoreline affecting community	*10
Maps available for inspection at the Office of the Borough Clerk, Borough Hall, 916 River Road, Edgewater, New Jersey.				
Send comments to Honorable Thomas Tansey, Mayor of the Borough of Edgewater, 916 River Road, Edgewater, New Jersey 07020.				
New Jersey	Paramus, borough, Bergen County	Saddle River	Downstream corporate limits	*46
			Upstream Century Road	*52
			Upstream Grove Street	*61
			Downstream Linwood Avenue	*76
		Sprout Brook	Downstream corporate limits	*42
			Upstream Century Road	*46
			State Route 17	*47
			Confluence of Mannings Brook	*53

PROPOSED BASE (100-YEAR) FLOOD ELEVATIONS—Continued

State	City/town/county	Source of flooding	Location	#Depth in feet above ground. *Elevation in feet (NGVD)
		Mannings Brook	Confluence with Sprout Brook	*53
			Downstream footbridge	*54
		Van Saun Mill Brook	Downstream corporate limits	*16
			Upstream Howland Avenue	*31
			Continental Avenue	*45
		Coles Brook	Downstream corporate limits	*16
			Upstream corporate limits	*25
		Behnke Brook	Confluence with Herring Brook	*32
			Upstream Forest Avenue	*43
			Downstream Midland Avenue	*61
		Herring Brook	Confluence with Van Saun Mill Brook	*32
			Downstream Meadow Lane	*39
			Upstream State Route 4	*53

Maps available for inspection at the Municipal Building, One Jockish Square, Paramus, New Jersey.

Send comments to Honorable Joseph Cipolla, Mayor of Paramus, One Jockish Square, Paramus, New Jersey 07602.

New York	Amity, town, Allegany County	Genesee River	Downstream corporate limits	*1,332
			Confluence of Van Campen Creek	*1,340
			Downstream corporate limits of Village of Belmont	*1,364
			Upstream corporate limits of Village of Belmont	*1,387
			Upstream side Corbin Hill Road	*1,398
			Upstream corporate limits	*1,427
		Phillips Creek	Corporate limits of Village of Belmont	*1,382
			Upstream side Old Whithey Road	*1,529
			Upstream side Irish Settlement Road	*1,621
		Plum Bottom Creek	Corporate limits of Village of Belmont	*1,387
			Upstream side Hood Road	*1,394
			Upstream side Conrail	*1,403
			Upstream side Ingraham Road	*1,430
			8,810 feet upstream Ingraham Road	*1,568
		Van Campen Creek	Confluence with Genesee River	*1,340
			Upstream side State Route 19	*1,348
			Upstream corporate limits	*1,371

Maps available for inspection at the Amity Town Hall, One Shuyler Street, Belmont, New York.

Send comments to Honorable Richard Miess, Supervisor of the Town of Amity, One Shuyler Street, Belmont, New York 14813.

New York	Hyde Park, town, Dutchess County	Crum Elbow Creek	At confluence with Hudson River	*9
			At Access Road located upstream of Dock Street	*75
			Upstream of dam located just upstream of U.S. Route 9.	*134
			Upstream of downstream crossing of East Market Street.	*176
			Upstream of upstream crossing of East Market Street	*207
			Upstream of Mill Road	*228
			Upstream of South Cross Road (most upstream crossing).	*248
			Upstream of North Cross Road	*256
			Upstream of Mills Cross Road	*273
			Corpoarte limits	*290
		Fall Kill	At corporate limits	*216
			Upstream of Dutchess Hill Road	*217
			Upstream of Roosevelt Road	*224
			Upstream of Roosevelt Road North	*228
			Upstream of Cream Street	*248
		Maritje Kill	Approximately 150 feet downstream of U.S. Route 9	*71
			Upstream of Saint Andrew Road	*149
			Upstream of Newhold Road	*198
			Upstream of State Route 9G	*233
			Approximately 4,100 feet Upstream of Crum Elbow Road.	*253
		Hudson River	Entire shoreline within community	*9

Maps available for inspection at the Town Hall, Albany Post Road, Hyde Park, New York.

Send comments to Honorable William Bartles, Supervisor of the Town of Hyde Park, Town Hall, Hyde Park, New York 12538.

New York	Moreau, town, Saratoga County	Hudson River	Downstream corporate limts	*129
			Delaware and Hudson Railway (upstream side)	*131
			Approximately 0.5 mile downstream of Bakers Falls Dam.	*141
			Upstream Bakers Falls Dam	*211
			Downstream of Feeder Dam	*275
			Upstream of Feeder Dam	*290

Maps available for inspection at the Town Hall, 61 Hudson Street, South Glens Falls, New York.

Send comments to Honorable R. Gardner Congdon, Supervisor of the Town of Moreau, 61 Hudson Street, South Glens Falls, New York 12801.

New York	Niagara, town, Niagara County	Cayuga Creek	Porter Road (upstream side)	*557
			Downstream corporate limits	*571
		West Tributary to Cayuga Creek	Drag Strip (downstream side)	*593
			Porter Road (upstream side)	*582
		Gill Creek	Upstream corporate limits	*599
			Downstream corporate limits	*586

PROPOSED BASE (100-YEAR) FLOOD ELEVATIONS—Continued

State	City/town/county	Source of flooding	Location	#Depth in feet above ground. *Elevation in feet (NGVD)
		Walden Creek	At confluence with West Prong Little Pigeon River	*963
			At confluence of Mill Creek	*967

Maps available for inspection at the Town Hall, 7105 Lockport Road, Niagara Falls, New York.

Send comments to Honorable Calvin Richards, Supervisor of the Town of Niagara, 7105 Lockport Road, Niagara Falls, New York 14305.

New York	Portage, town, Livingston County	Genesee River	Downstream Main Street	*1,115
			At Whiskey bridge	*1,120
		Keshequa Creek	Downstream corporate limits	*968
			Upstream Parker Road	*1,029
			Approximately 1,530 feet upstream of Parker Road	*1,043

Maps available for inspection at the residence of the Town Clerk, Oleath Kemp, 1153 East Main Street, Hunt, New York.

Send comments to Honorable Dean Mehlenbacher, Supervisor of the Town of Portage, Hunt, New York 14846.

New Jersey	Upper, township, Cape May County	Atlantic Ocean	Entire shoreline within community	*15
		Great Egg Harbor	From Garden State Parkway to Golders Point along shoreline.	*14

Maps available for inspection at the Upper Township Municipal Building, Tuckahoe, New Jersey.

Send comments to Honorable Leonard Migliaccio, Mayor of the Township of Upper, P.O. Box 205, Tuckahoe, New Jersey 08250.

Ohio	(C) Jackson, Jackson County	Little Salt Creek	Approximately 0.5 mile downstream of the confluence of Jisco Lake Creek.	*648
			Approximately 0.6 mile upstream of State Route 124	*656
		Horse Creek	Approximately 0.3 mile downstream of Chillicothe Street.	*650
			Approximately 0.3 mile upstream of Mill Street	*651
		Price Creek	Confluence with Little Salt Creek	*649
			Approximately 0.4 mile upstream of Coffman Street	*650
		Jisco Lake Creek	Confluence with Little Salt Creek	*649
			At confluence with Parkview Lateral	*650
		South Branch	At the confluence with Little Salt Creek	*654
			Approximately 0.3 mile upstream of Vaughn Street	*669
		Sugar Run	Just downstream from Chessie System	*652
			Approximately 0.5 mile upstream from Chessie System	*654
		Parkview Lateral	At confluence with Jisco Lake Creek	*650
			Approximately 0.1 mile upstream of State Street	*650
		Lateral L	At confluence with Little Salt Creek	*654
			Approximately 200 feet upstream of State Route 93	*657

Maps available for inspection at the Safety Service Director's Office, City Hall, Memorial Building, Broadway Street, Jackson, Ohio.

Send comments to Honorable Burleigh Oiler, Mayor, City of Jackson, City Hall, Memorial Building, Broadway Street, Jackson Ohio 45640.

Oregon	Beaverton (city) Washington County	Beaverton Creek	Center of Southwest Canyon Road and Beaverton Creek.	*178
		Shallow Flooding-Sheet Flow	Center of Southwest 5th Street and Western Avenue	#1
		South Fork Beaverton Creek	Center of Southern Pacific Railroad and South Fork Beaverton Creek.	*185
		Johnson Creek	Center of Southwest Glenbrook Road and Johnson Creek.	*176
		Fanno Creek	Center of State Highway 217 and Fanno Creek	*186
		Cedar Mill Creek	Center of Burlington Northern Railroad (Main Line) and Cedar Mill Creek.	*173

Maps are available for inspection at the Engineering Department, 4950 SW Hall Blvd, Beaverton, Oregon.

Send comments to the Honorable Jack Nelson, 4950 SW Hall Blvd, Beaverton, Oregon 97005.

Tennessee	Unincorporated areas of Dickson County	Bartons Creek	Just downsstream of Soules Chapel Road	*478
		Yellow Creek	Just downsstream of Yellow Creek Road State Highway 46) First crossing from downstream.	*560
			Approximately 200 feet upstream of Yellow Creek Road, in the south of its intersection with Union Road (second crossing).	*590
		Willow Branch	Just upstream of Cowan Road	*716
		Furnace Creek	Just upstream of State Highway 48	*514
		Jones Creek	Approximately 500 feet upstream of Hummingbird Lane.	*661
			Just upstream of Jones Creek Road	*687
		Cumberland River	Approximately 1,000 feet downstream of Cheatham Dam.	*399
			At the confluence of Harpeth River	*401
		Harpeth River	Approximately 800 feet downstream of Timberridge Road.	*418
			Approximately 700 feet downstream of Ashland City Road.	*425

Maps are available for inspection at Dickson County Executive's Office, County Courthouse Annex, Charlotte, Tennessee 37036.

Send comments to the Mr. William D. Field, County Executive or Janet Jackson, Administrative Assistant, Dickson County Courthouse Annex, Charlotte, Tennessee 37036.

Tennessee	City of Pigeon Forge, Sevier County	West Prong Little Pigeon River	Just upstream of U.S. Highway 441	*977
			Just upstream of Mill Dam	*1,017
			Just upstream of Gulf Road	1,037
		Mill Creek	Just upstream of County Road	*971
			Just upstream of Pine Mountain Road	*1,004

PROPOSED BASE (100-YEAR) FLOOD ELEVATIONS—Continued

State	City/town/county	Source of flooding	Location	#Depth in feet above ground. *Elevation in feet (NGVD)
		East Tributary to Gill Creek	Conrail (upstream side)	*601
			North Whitham Road (upstream side)	*598
Maps are available for inspection at Building Inspector's Office, City Hall, Pigeon Forge, Tennessee 37863.				
Send comments to Mayor English McCarter or Earlene Teaster, City Manager, City Hall, Pigeon Forge, Tennessee 37863.				
Tennessee	Unincorporated areas of Sevier County	Middle Creek	Just upstream of Ridge Road	*949
			Just downstream of Centerview Road	*975
			Just downstream of Secondary Road 2605	*995
		Walden Creek	Just downstream of Secondary Road 2422 (Downstream Crossing).	*969
		Mill Creek	Just downstream of Secondary Road 2422	*969
			Just upstream of Pine Mountain Road	*1,004
			Approximately 100 feet upstream of Mill Creek Road	*1,041
		West Prong Little Pigeon River	Just downstream of Park Road	*922
			Just upstream of U.S. Highway 441	*936
			Just upstream of Pine Grove Road	*955
		Little Pigeon River	Just downstream of Boyds Creek Road	*881
			Just upstream of Boyds Creek Road	*886
			Just upstream of Walnut Grove Road	*916
		Gists Creek	Just upstream of U.S. Highway 411 and 441 (Chapman Highway) (Downstream-most Crossing).	*905
			Just downstream of Jess's Circle Road	*925
		West Fork Gists Creek	Approximately 120 feet downstream of Jess's Circle Road.	*923
			Approximately 150 feet upstream of Loafroad	*934
		Dudley Creek	Just upstream of dam	*1,452
			Just downstream of Private Road	*1,542
Maps available for inspection at Sevier County Executive's Office, County Courthouse, Sevierville, Tennessee 31862.				
Send comments to Mr. Larry Waters, Sevier County Executive or Mr. Jeff McCarter, Emergency Management Director, Sevier County Courthouse, Sevierville, Tennessee 37862.				
Tennessee	Unicorporated areas of Sumner County	Station Camp Creek	Approximately 540 fee uptsream of Long Hollow Pike	*490
			Just upstream of the confluence of Station Camp Creek and Strother Branch.	*570
		Bledsoe Creek	Approximately 530 feet upstream of State Highway 25	*455
			Just downstream of the Lousiville and Nashville Railroad.	*504
		East Fork Bledsoe Creek	At Sumner-Trousdale County Line	*601
		East Camp Creek	Approximately 80 feet upstream of Wallace Road	*549
			Just downstream of Linsey road	*562
		Drakes Creek	Approximately 170 feet upstream of Sandy Valley Road.	*553
			Approximately 260 feet upstream of Shell Road	*556
		Hogan Branch	Approximately 130 feet upstream of Shackle Island Road.	*547
		Deshea Creek	Just downstream of Louisville and Nashville Railroad	*491
			Just downstream of U.S. Highway 31 East	*506
		Mansker Creek	Approximately 142.5 feet upstream of U.S. Highway 41	*485
		Cumberland River	Just upstream of the City of Hendersonville eastern corporate limits.	*451
			Just downstream of the City of Gallatin western Extra-territorial Jurisdiction Limits.	*452
			Approximately 5000 feet downstream of the Sumner County-Trousdale County Line.	*457
		Lick Creek	Approximately 170 feet upstream of State Highway 25 (downstream crossing).	*484
			Just upstream of State Highway 25 (upstream of State Hishway 25 (upstream crossing).	*495
Maps available for inspection at Building Inspector's Office, Sumner County Coruthouse, Gallatin, Tennessee 37066.				
Send comments to Mr. Bethel Brown, County Executive, or Mr. Paul Freelf, Building Inspector, Sumner County Courthouse, Gallatin, Tennessee 37066.				

(National Flood Insurance Act of 1968 (Title XIII of Housing and Urban Development Act of 1968), effective January 28, 1969 (33 FR 17804, November 28, 1968), as amended; 42 U.S.C. 4001–4128; Executive Order 12127, 44 FR 19367; and delegation of authority to the Associate Director)

Issued: September 12, 1983.

Dave McLoughlin,

Deputy Associate Director, State and Local Programs and Support.

[FR Doc. 83-28121 Filed 10-17-83; 8:45 am]

BILLING CODE 6718-03-M

FEDERAL COMMUNICATIONS COMMISSION

47 CFR Part 73

[MM Docket No. 83-157; RM-4317]

FM Broadcast Station in Appalachicola, Florida; Changes Made in Table of Assignments

AGENCY: Federal Communications Commission.

ACTION: Withdrawal of proposed rule.

SUMMARY: This action dismisses the proposal to assign Class C FM Channel 290 to Appalachicola, Florida, in response to a petition filed by Richard L. Plessinger. The rulemaking is dismissed because of an absence of continued interest in the proposal.

ADDRESS: Federal Communications Commission, Washington, D.C. 20554.

FOR FURTHER INFORMATION CONTACT: Mark N. Lipp, Mass Media Bureau, (20) 634–6530.

List of Subjects in 47 CFR Part 73

Radio Broadcasting.

Report and Order; Proceeding Terminated

In the matter of amendment of § 73.202(b), Table of Assignments, FM Broadcast Stations, (Appalachicola, Florida): MM Docket No. 83-157 RM-4317.

Adopted: September 28, 1983.
Released: October 11, 1983.

By the Chief, Policy and Rules Division.

1. Before the Commission is the *Notice of Proposed Rule Making*, 48 FR 11469, published March 18, 1983, proposing the assignment of Class C Channel 290 to Appalachicola, Florida, in response to a petition filed by Richard L. Plessinger.

2. The Commission did not receive comments [1] from the petitioner (or other interested parties) and consistent with the policies and procedures set forth in the Appendix to the *Notice* we must dismiss the petition to assign an FM channel to Appalachicola.

3. In view of the foregoing, it is ordered, That the petition of Richard L. Plessinger proposing the assignment of Class C Channel 290 to Appalachicola, Florida, is hereby dismissed.

4. For further information concerning this proceeding, contact Mark N. Lipp, Mass Media Bureau, (202) 634-6530.

Federal Communications Commission.

Roderick K. Porter,

Chief, Policy and Rules Division, Mass Media Bureau.

[FR Doc. 83-28181 Filed 10-17-83; 8:45 am]

BILLING CODE 6712-01-M

[1] Subsequently, on July 11, 1983, petitioner filed a petition for rule-making seeking the assignment of Channel 265A to Appalachicola, Florida (RM-4551).

DEPARTMENT OF COMMERCE

National Oceanic and Atmospheric Administration

50 CFR Part 663

Ocean Salmon Fisheries Off the Coasts of Washington, Oregon, and California

AGENCY: National Oceanic and Atmospheric Administration (NOAA), Commerce.

ACTION: Notice of public hearings; correction.

SUMMARY: This document corrects a public hearing notice for Ocean Salmon Fisheries off the Coasts of Washington, Oregon, and California; and Pacific Coast Groundfish Fishery Management Plans that was published on October 4, 1983, 48 FR 45274.

FOR FURTHER INFORMATION CONTACT: Mr. Joseph C. Greenley, 503-221-6352.

In FR Doc. 83-26990, appearing on page 45274 in the October 4, 1983, issue, third column, under **SUMMARY,** line 6 from the bottom of the page, the "and" should be deleted before "(2)", a comma should replace the period at the end of the sentence, and the following should be added: "and (3) early consideration of a proposal for managing 1984 groundfish fisheries."

On page 45275, second column, under **SUPPLEMENTARY INFORMATION,** first paragraph, line 6, a comma should be added after "fisheries"; "and" should be deleted. The period at the end of the sentence should be replaced by a comma and the following should be added: "and consider a proposal for managing 1984 Pacific Coast Groundfish Fisheries."

Dated: October 13, 1983.

Joseph W. Angelovic,

Deputy Assistant Administrator for Science and Technology, National Marine Fisheries Service.

[FR Doc. 83-28353 Filed 10-14-83; 8:45 am]

BILLING CODE 3510-22-M

---

50 CFR Part 663

Ocean Salmon Fisheries off the Coasts of Washington, Oregon, and California; Pacific Coast Groundfish Fishery Management Plans; Public Hearings

Correction

In FR Doc. 83-26990 beginning on page 45274 in the issue of Tuesday, October 4, 1983, make the following correction:

On page 45275, first column, under **DATES,** remove lines nine and ten and insert "October 19, 1983—N. Bend, Oregon, and Monterey, California."

BILLING CODE 1505-01-M

Notices

Federal Register
Vol. 48, No. 202
Tuesday, October 18, 1983

This section of the FEDERAL REGISTER contains documents other than rules or proposed rules that are applicable to the public. Notices of hearings and investigations, committee meetings, agency decisions and rulings, delegations of authority, filing of petitions and applications and agency statements of organization and functions are examples of documents appearing in this section.

ACTION

Members of Performance Review Board

AGENCY: ACTION.

ACTION: Revision of list of Performance Review Board Positions.

SUMMARY: ACTION publishes the revised list of positions which comprise the Performance Review Board established by ACTION under the Civil Service Reform Act.

FOR FURTHER INFORMATION CONTACT: Veronica D. Trietsch, Director of Personnel, ACTION, 806 Connecticut Avenue, NW., Washington, D.C. 20525 (202) 634–9261.

SUPPLEMENTARY INFORMATION: The Civil Service Reform Act of 1978 (CSRA), which created the Senior Executive Service (SES), requires that each agency establish one or more performance review boards to review and evaluate the initial appraisal of a senior executive's performance by the supervisor and to make recommendations to the appointing authority concerning the performance of the senior executive.

The position listed below will serve as members on the ACTION Performance Review Board.

1. Deputy Director, Chairperson, ACTION.
2. Associate Director for the Office of Domestic Operations, ACTION.
3. Executive Assistant to the Director, ACTION.
4. Assistant Director for the Office of Volunteer Liaison, ACTION.
5. Assistant Director for the Office of Compliance, ACTION.
6. Assistant Director for the Office of Financial Affairs/Comptroller, ACTION.
7. Deputy Executive Director, U.S. Savings Bonds Division, Department of Treasury.
8. Federal Co-Chairman, Appalachian Regional Commission.

Issued in Washington, D.C. on October 7, 1983.

Thomas W. Pauken,
Director, ACTION.

[FR Doc. 83-28291 Filed 10-17-83; 8:45 am]
BILLING CODE 6050-01-M

Schedule for Awarding Senior Executive Service Performance Awards; Bonuses

AGENCY: ACTION.

ACTION: Notice.

SUMMARY: Notice is hereby given of the schedule for awarding Senior Executive Service Bonuses.

FOR FURTHER INFORMATION CONTACT: Veronica D. Trietsch, Director of Personnel ACTION, 806 Connecticut Avenue, NW., Washington, D.C. 20525 (202) 634–9261

SUPPLEMENTARY INFORMATION: Office of Personnel Management Guidelines require that each agency publish a notice in the **Federal Register** of the agency's schedule for awarding Senior Executive Service Bonuses at least 14 days prior to the date on which the awards will be paid.

Schedule for Awarding Senior Executive Service Bonuses

ACTION intends to award Senior Executive Service Bonuses for the performance rating cycle of August 1, 1982 through July 31, 1983 with payouts on or about November 25, 1983.

Issued Washington, D.C. on October 7, 1983.

Thomas W. Pauken,
Director, ACTION.

[FR Doc. 83-28294 Filed 10-17-83; 8:45 am]
BILLING CODE 6050-01-M

ADMINISTRATIVE CONFERENCE OF THE UNITED STATES

Committee on Adjudication; Public Meeting

Pursuant to the Federal Advisory Committee Act (Pub. L. 92–463), notice is hereby given of a meeting of the Committee on Adjudication of the Administrative Conference of the United States, to be held at 10:00 a.m., Monday, November 7, 1983, at the Office of the Administrative Conference of the United States, 2120 L Street, NW, Washington, D.C.

The committee will meet to consider (1) a proposed recommendation, Improvements in the Administration of the Government in the Sunshine Act (*see* 48 FR 45266); and (2) a proposed recommendation, Agency Structures for Review of Decisions of Presiding Officers Under the Administrative Procedure Act (*see* 48 FR 45266).

Attendance is open to the interested public, but limited to the space available. Persons wishing to attend should notify the Office of the Chairman of the Administrative Conference at least two days prior to the meeting. The committee chairman, if she deems it appropriate, may permit members of the public to present oral statements at the meeting; any member of the public may file a written statement with the Committee before, during, or after the meeting.

For further information concerning this meeting, contact Richard K. Berg, Office of the Chairman, Administrative Conference of the United States, 2120 L Street, NW., Suite 500, Washington, D.C. 20037. Telephone: (202–254–70 Minutes of the meeting will be available on request.

Dated: October 13, 1983.

Richard K. Berg,
General Counsel.

[FR Doc. 83-28310 Filed 10-17-83; 8:45 am]
BILLING CODE 6110-01-M

DEPARTMENT OF AGRICULTURE

Office of the Secretary

Modification of De Minimis Amount for Imported Sugar Exempt From Certificates of Eligibility

AGENCY: Office of the Secretary, USDA.

ACTION: Notice.

SUMMARY: This notice announces a modification of the de minimis amount for sugar which may be imported into the United States exempt from the requirements of certificates of eligibility set forth in an interim rule published on August 11, 1982 in the Federal Register (47 FR 34780).

EFFECTIVE DATE: September 26, 1983.

FOR FURTHER INFORMATION CONTACT: James A. Truran, chief, Sugar Group, Foreign Agricultural Service,

Department of Agriculture, Washington, D.C. 20250, Telephone: (202) 447-2916.

SUPPLEMENTARY INFORMATION: The "Regulations Governing Certificates of Eligibility for Imported Sugar" (15 CFR Part 2011) published by the Office of the United States Trade Representaive on August 11, 1982 in the Federal Register (47 FR 34780) provides that sugar from a participating country may enter the United States for consumption only if it is accompanied by a certificate of eligibility. Section 2011.3(b) of the regulation provides in part as follows: "Individual shipments of sugar into the United States which are less than 20 short tons shall be exempt from the [certificate] requirements of this part. However, the Secretary [of Agriculture] may modify, suspend, or otherwise limit this exemption if he determines that such action is necessary and appropriate. Notice of any such modification, suspension, or limitation shall be published by the Secretary in the **Federal Register**."

Canada became a participant in the certificate of eligibility system on September 26, 1983. As a result of the close proximity of Canada to the United states and normal shipping practices between the two countries for sugar, a de minimis amount of 20 short tons for individual shipments of sugar is inappropriate for Canada. Therefore, I determined that it was necessary and appropriate to modify the de minimis amount for individual shipments of sugar from Canada under 15 CFR 2011.3(b). Accordingly, effective September 26, 1983, the de minimis amount for Canada was modified from 20 short tons to 250 pounds. The de minimis amount for all other participating countries remains unchanged.

Signed at Washington, D.C. on October 13, 1983.

John R. Block,

Secretary of Agriculture.

[FR Doc. 83-28342 Filed 10-17-83; 8:45 am]

BILLING CODE 3410-10-M

COMMISSION ON CIVIL RIGHTS

New Mexico Advisory Committee; Agenda and Notice of Open Meeting

Notice is hereby given, pursuant to the provisions of the Rules and Regulations of the U.S. Commission on Civil Rights, that a meeting of the New Mexico Advisory Committee to the Commission will convene at 8:30 a.m. and will end at 6:00 p.m. on November 8, 1983, at the Holiday Inn-Las Cruces, 201 East University Blvd., P.O. Box H.I., Las Cruces, New Mexico 88001. The purpose of this meeting is for the New Mexico State Advisory Committee to hold a conference to address political participation of minorities in southern New Mexico.

Persons desiring additional information or planning a presentation to the Committee, should contact the Chairperson, Roberto A. Mondragon, Route 5, Box 343 A, Sante Fe, New Mexico 87501, (505) 827-4956, or the Southwestern Regional Office, Heritage Plaza, 418 South Main, San Antonio, Texas 78204, (512) 229-5570.

This meeting will be conducted pursuant to the provisions of the Rules and Regulations of the Commission.

Dated at Washington, D.C., October 12, 1983.

John I. Binkley,

Advisory Committee Management Officer.

[FR Doc. 83-28248 Filed 10-17-83; 8:45 am]

BILLING CODE 6335-01-M

DEPARTMENT OF COMMERCE

President's Commission on Industrial Competitiveness; Meetings

AGENCY: Office of Economic Affairs, Commerce.

ACTION: Notice of Meetings.

SUMMARY: The Commission was established by Executive Order 12428 on June 28, 1983 and its charter was approved on August 23, 1983. The Commission shall review means of increasing the long-term competitiveness of United States industries at home and abroad, with particular emphasis on high technology, and provide appropriate advice to the President through the Cabinet Council on Commerce and Trade and the Department of Commerce.

TIMES AND PLACES:

Committee on International Trade (a subcommittee of the Commission), Thursday, October 20, 1983, 9:00 am-5:00 pm, Sheraton O'Hare, Heathrow Room, 6810 North Mannheim, Rosemont, IL.

Committee on Human Resources (a subcommittee of the Commission), Friday, Novermber 4, 1983, 9:00 am-3:30 pm, Westinghouse Corporate Headquarters, Stanwix', Street Pittsburgh, PA.

Committee on Capital Formation (a subcommittee of the Commission), Friday, November 11, 1983, 9:00 am-4:00 pm, The Madison Hotel, The Boardroom (Second Floor), 1177—15th Street, NW, Washington, DC.

Less than 15 days notice is being given for the October 20 meeting of the Committee on International Trade (subcommittee of the Commission), due to the inability of the committee members to meet any other time in the near future.

PUBLIC PARTICIPATION: The meetings will be open to public attendance. A limited number of seats will be available for the public on a first-come, first-served basis.

FOR FURTHER INFORMATION CONTACT: James L. Wolbarsht, Executive Advisor, Office of Assistant Secretary for Productivity, Technology and Innovation, U.S. Department of Commerce, Washington, D.C. 20230, telephone: 202-377-8080 on substantive issues or Yvonne Barnes, Departmental Committee Management Analyst, 202-377-4217 on issues regarding administration of the Commission.

Dated: October 14, 1983.

Egils Milbergs,

Deputy Assistant Secretary for Productivity, Technology and Innovation.

[FR Doc. 83-28488 Filed 10-14-83; 5:03 pm]

BILLING CODE 3510-18-M

International Trade Administration

[A-122-013]

Certain Steel Valves and Certain Parts Thereof from Japan; Initiation of Antidumping Investigation

AGENCY: International Trade Administration, Commerce.

ACTION: Notice.

SUMMARY: On the basis of a petition filed in proper form with the United States Department of Commerce, we are initiating an antidumping investigation to determine whether certain steel valves and certain parts thereof from Japan are being, or are likely to be, sold in the United States at less than fair value. We are notifying the United States International Trade Commission (ITC) of this action so that it may determine whether imports of this merchandise are materially injuring, or threatening to materially injure, a United States industry. If the investigation proceeds normally, the ITC will make its preliminary determination on or before November 6, 1983, and we will make ours on or before February 29, 1984.

EFFECTIVE DATE: October 18, 1983.

FOR FURTHER INFORMATION CONTACT: Vincent P. Kane, Office of Investigations, International Trade Administration, U.S. Department of

Commerce, 14th Street and Constitution Avenue NW., Washington, D.C. 20230, telephone: (202) 377-5414.

SUPPLEMENTARY INFORMATION: On September 22, 1983, we received a petition in proper form from counsel for Condec Flow Control Group of The Lunkenheimer Company; Cooper Valve Company; Crane Company; Mark Controls Corporation; The Wm. Powell Company; Rockwell International Corporation, Flow Control Division; Smith Valve Corporation; Stockham Valves & Fittings, Inc.; Velan Valve Corporation; Henry Vogt Machine Company, and Walworth Company as individual petitioners and collectively as the Valve Manufacturers Association Fair Trade Council.

In compliance with the filing requirements of section 353.36 of the Commerce Regulations (19 CFR 353.36), the petition alleges that imports of the subject merchandise from Japan are being, or are likely to be, sold in the United States at less than fair value within the meaning of section 731 of the Tariff Act of 1930, as amended (19 U.S.C. 1673) (the Act), and that these imports are materially injuring, or are threatening to materially injure, a United States industry. The allegation of sales at less than fair value of the merchandise under investigation from Japan is supported by comparisons of United States prices based on price lists with the foreign market value based on home market list prices for comparable models of the largest Japanese manufacturer exporting to the United States.

Initiation of Investigation

Under section 732(c) of the Act, we must determine, within 20 days after a petition is filed, whether it sets forth the allegations necessary for the initiation of an antidumping investigation and whether it contains information reasonably available to the petitioners supporting the allegations. We have examined the petition filed by the representatives of the domestic manufacturers of certain steel valves and parts thereof, and we have found that it meets the requirements of section 732(b) of the Act. Therefore, we are initiating an antidumping investigation to determine whether certain steel valves and certain parts thereof from Japan are being, or are likely to be, sold at less than fair value in the United States. If our investigation proceeds normally, we will make our preliminary determination by February 29, 1984.

Scope of Investigation

The merchandise covered by this investigation is wedge gate, swing check, and globe valves, and certain parts of the foregoing, of steel currently provided for under item number 680.17 of the Tariff Schedules of the United States, Annotated (TSUSA). Certain parts include valve bodies and partially completed valves consisting of valve bodies imported with one or more of the following parts: bonnet, stem, wedge, handle or seat rings.

Notification to the ITC

Section 732(d) of the Act requires us to notify the ITC of this action and to provide it with the information we used to arrive at this determination. We will notify the ITC and make available to it all nonprivileged and nonconfidential information. We will also allow the ITC access to all privileged and confidential information in our files, provided it confirms that it will not disclose such information either publicly or under an administrative protective order without the written consent of the Deputy Assistant Secretary for Import Administration.

Preliminary Determination by ITC

The ITC will determine within 45 days of the date the petition was received whether there is a reasonable indication that imports of certain steel valves and certain parts thereof from Japan are materially injuring, or are likely to materially injure, a United States industry. If its determination is negative, this investigation will terminate; otherwise it will proceed according to the statutory procedures.

Dated: October 11, 1983.

Alan F. Holmer,

Deputy Assistant Secretary for Import Administration.

[FR Doc. 83-28309 Filed 10-17-83; 8:45 am]

BILLING CODE 3510-DS-M

Consolidated Decision on Applications for Duty-Free Entry of Electron Microscopes; Case Western Reserve University

The following is a consolidated decision on applications for duty-free entry of electron microscopes pursuant to Section 6(c) of the Educational, Scientific, and Cultural Materials Importation Act of 1966 (Pub. L. 89-651, 80 Stat. 897) and the regulations issued pursuant thereto (15 CFR Part 301 as amended by 47 FR 32517). A copy of the record pertaining to each of the applications in this consolidated decision is available for public review between 8:30 AM and 5:00 PM in Room 1523, Statutory Import Programs Staff, U.S. Department of Commerce, 14th and Constitution Avenue, NW., Washington, D.C. 20230.

Docket No.: 83-275. Applicant: Case Western Reserve University, 10900 Euclid Avenue, Cleveland, OH 44106. Instrument: Electron Microscope, Model JEM 200CX. Manufacturer: JEOL, Japan. Intended use of instrument: See notice on page 39265 in the **Federal Register** of August 30, 1983. Instrument ordered: February 18, 1983.

Docket No.: 83-277. Applicant: Riverside Hospital, 500 J. Clyde Morris Boulevard, Newport News, VA 23601. Instrument: Electron Microscope, Model JEM-100CX and Accessories. Manufacturer: JEOL, Japan. Intended use of instrument: See notice on page 39266 in the **Federal Register** of August 30, 1983. Instrument ordered: May 9, 1983.

Docket No.: 83-283. Applicant: Scripps Clinic and Research Foundation, 10666 North Torrey Pines Road, La Jolla, CA 92037. Instrument: Electron Microscope, Model H-600-1 and Accessories. Manufacturer: Hitachi Scientific Instruments, Japan. Intended use of instrument: See notice on page 39973 in the **Federal Register** of September 2, 1983. Instrument ordered: July 7, 1983.

Docket No.: 83-288. Applicant: USDA, PIADC, APHIS, National Veterinary Services Labs, 13th St. & Dayton Rd., Ames, IA 50010. Instrument: Electron Microscope, EM 10CA. Manufacturer: Carl Zeiss, West Germany. Intended use of instrument: See notice on page 39266 in the **Federal Register** of August 30, 1983. Instrument ordered: June 29, 1983.

Docket No.: 83-289. Applicant: Virginia Polytechnic Institute and State University, Purchasing Department, Blacksburg, VA 24061. Instrument: Electron Microscope, EM 10CA and Accessories. Manufacturer: Carl Zeiss, West Germany. Intended use of instrument: See notice on page 39266 in the **Federal Register** of August 30, 1983. Application received by Commissioner of Customs: August 12, 1983.

Docket No.: 83-301. Applicant: US Army Elct Tech & Dvcs Laboratory, Attn: DELET-ED, Fort Monmouth, NJ 07703. Instrument: Electron Microscope, EM 420T and Accessories. Manufacturer: Philips Gloeilampenfabrieken, The Netherlands. Intended use of instrument: See notice on page 40932 in the **Federal Register** of September 12, 1983. Instrument ordered: May 16, 1983.

Docket No.: 83-302. Applicant: Boston University, Department of Biology, 2 Cummington St., Boston, MA 02215. Instrument: Electron Microscope, EM 410LS and Accessories. Manufacturer: N.V. Philips, The Netherlands. Intended use of instrument: See notice on page

40932 in the **Federal Register** of September 12, 1983. Application received by Commissioner of Customs: August 22, 1983.

Docket No.: 83-304. Applicant: Virginia Commonwealth University, Medical College of Virginia, Box 110, 1101 East Marshall St., Richmond, VA 23298. Instrument: Electron Microscope, EM 10CA and Accessories. Manufacturer: Carl Zeiss, West Germany. Intended use of instrument: See notice on page 40933 in the **Federal Register** of September 12, 1983. Instrument ordered: August 18, 1983.

Comments: No comments have been received with respect to any of the foregoing applications.

Decision: Applications approved. No instrument or apparatus of equivalent scientific value to the foreign instrument, for such purposes as these instruments are intended to be used, was being manufactured in the United States at the time the instruments were ordered.

Reason: Each foreign instrument to which the foregoing applications relate is a conventional transmission electron microscope (CTEM). The description of the intended research and/or educational use of each instrument establishes the fact that a comparable CTEM is pertinent to the purposes for which each is intended to be used. We know of no CTEM which was being manufactured in the United States either at the time of order of each instrument described above or at the time of receipt of application by the U.S. Customs Service. The Department of Commerce knows of no other instrument or apparatus of equivalent scientific value to any of the foreign instruments to which the foregoing applications relate, for such purposes as these instruments are intended to be used, which was being manufactured in the United States either at the time of order or at the time of receipt of application by the U.S. Customs Service.

(Catalog of Federal Domestic Assistance Program No. 11.105, Importation of Duty-Free Educational and Scientific Materials)

Frank W. Creel,

Acting Director, Statutory Import Programs Staff.

[FR Doc. 83-28308 Filed 10-17-83; 8:45 am]

BILLING CODE 3510-DS-M

National Bureau of Standards

[Docket No. 30920-193]

Approved Interpretation for FIPS FORTRAN (FIPS PUB 69)

Under the provisions of Pub. L. 89-306 (79 Stat. 1127; 40 U.S.C. 759(f)) and Executive Order 11717 (38 FR 12315, dated May 11, 1973), the Secretary of Commerce is authorized to establish uniform Federal automatic data processing standards. FIPS PUB 69 specifies Federal Information Processing Standard (FIPS) FORTRAN. During the use of the standard, questions may arise as to the meaning of certain language specifications. FIPS PUB 29-1 defines the procedures to be followed in providing solutions to these questions. The procedures allow for the solutions to be applied uniformly throughout the Federal government and by all implements of processors acquired by the Federal government. Accordingly, in the March 8, 1982, issue of the **Federal Register** (47 FR 9876), the National Bureau of Standards published a notice of proposed interpretation of FIPS FORTRAN as it pertains to nested parentheses in an expression. All comments submitted about the proposed interpretation have been duly considered.

The following approved interpretation contains a definition of the problem, identification of the issues, approved interpretation, supporting justification for the approved interpretation, necessary clarifications to FIPS FORTRAN, and the effective date of the interpretation.

The approved interpretation, as of the effective date, becomes an integral part of FIPS FORTRAN, and as such is considered to be included whenever reference is made to FIPS FORTRAN.

Interested parties may submit comments concerning interpretations of FIPS FORTRAN to Director, Institute for Computer Sciences and Technology, Attention: FIPS FORTRAN, National Bureau of Standards, Washington, DC 20234.

Dated: October 11, 1983.

Ernest Ambler,

Director.

FIPS FORTRAN

Interpretation 1—Nested Parentheses in an Expression

Problem: If an arithmetic assignment statement which contains an arbitrary number of sets of nested parentheses surrounding an arithmetic express fails to be accepted by a processor, does such action cause the processor to fail to conform to the standard?

Issue: Given the following arithmetic statement:

X={{{{{...{{A}}...}}}}}

with 57 sets of parentheses surrounding the A. Does failure to accept such a statement cause the processor to be non-standard conforming?

Interpretation: This interpretation applies to American National Standard FORTRAN X3.9-1978, as it has been adopted as FIPS FORTRAN, FIPS PUB 69. The interpretation is that a FORTRAN processor may impose limitations on the size and complexity of a standard-conforming program that it may accept. Thus, the standard does not specify the number of nested parentheses that a processor must recognize in an expression. Hence, the number is processor-dependent.

Supporting Justification

References: The following references to American National Standard FORTRAN, X3.9-1978, pertain to the issue involved in this interpretation:

(a) Page 1-1, 1.3 Scope, 1.3.2 Exclusions. "This standard does not specify * * * (5) The size or complexity of a program and its data that will exceed the capacity of any specific data processing system or the capability of a particular processor."

(b) Page 1-2, 1.4 Conformance. "Because a standard-conforming program may place demands on the processor that are not within the scope of this standard, * * *, conformance to this standard does not insure that a standard-conforming program will execute consistently on all or any standard-conforming processors."

Discussion: The term "processor", as used in the FORTRAN standard, implies the combined actions of a computer (hardware), its operating system, a compiler, and a loader. The processor may impose limitations on the size and complexity of a program in each of the above areas. Thus, a processor may apply a limit to the size of the stack in a parser of the compiler which can effect the acceptable depth of nesting of parentheses permitted in an expression.

Clarification of FIPS FORTRAN: None necessary.

Effective date of interpretation: This interpretation is effective on (please insert date which is 30 days after publication in the **Federal Register**).

[FR Doc. 83-28290 Filed 10-17-83; 8:45 am]

BILLING CODE 3510-CN-M

National Oceanic and Atmospheric Administration

International Whaling Commission; Meeting

AGENCY: National Oceanic and Atmospheric Administration.

ACTION: Notice of meetings.

SUMMARY: NOAA makes use of an Interagency Committee to assist in

preparing for meetings of the International Whaling Commission (IWC). This notice sets forth guidelines for participation on the Committee and a tentative schedule of meetings and other important dates.

DATE: October 17, 1983.

FOR FURTHER INFORMATION CONTACT: Dean Swanson, Office of Protected Species and Habitat Conservation, National Marine Fisheries Service, Department of Commerce, Washington, D.C. 20235. Phone: (202) 634-1792.

SUPPLEMENTARY INFORMATION: The Secretary of Commerce is charged with the responsibility of discharging the obligations of the United States under the International Convention for the Regulation of Whaling, 1946. This authority has been delegated to the Administrator of NOAA who also serves as the United States Commissioner to the IWC. The Administrator has primary responsibility with the Secretary of State for the preparation and negotiation of United States positions on international issues concerning whaling and for all matters involving the IWC. He is assisted by the Department of the Interior, the Marine Mammal Commission, and other interested agencies.

Each year NOAA conducts a series of meetings and other actions to prepare for the annual meeting of the IWC which is held in the summer. The major purpose of the preparatory meetings is to provide for participation in the development of policy by members of the public and non-governmental organizations interested in whale conservation. NOAA believes that this participation is important for the effective development and implementation of United States policy concerning whaling, and such participation is and shall continue to be a prerequisite to the establishment of United States negotiating positions for IWC meetings.

Because the meetings discuss United States negotiating positions, the substance of the meetings must be kept confidential. For example, proposed position papers that may be circulated at a meeting for discussion cannot be removed from the the meeting site and must be collected at the close of each meeting.

Any United States citizen with an identifiable interest in United States whale conservation policy may participate, but NOAA reserves the authority to inquire about the interests of any person who appears at a meeting and to determine the appropriateness of that person's participation. Persons who represent foreign interests may not attend. These stringent measures are necessary to protect the confidentiality of United States negotiating positions and are a necessary basis for the relatively open process of preparing for IWC meetings that characterizes current practice.

Readers should note that the 36th Annual Meeting of the IWC is schedule to occur in Buenos Aires, Argentina, in June rather than July which is one month earlier than recent IWC Annual Meetings. The tentative schedule of meetings, including those of the IWC, and deadlines for the preparation of position papers during 1984 is as follows:

February 3—Interagency Committee Meeting to initiate preparations for the June IWC meetings. Any subcommittees that may be required to address specific issues will be constituted. Interested persons who are unable to attend are welcome to submit comments and recommendations to the Administrator for consideration at the meeting or anytime thereafter. Such submissions should be sent to: Dr. John V. Byrne, Administrator, National Oceanic and Atmospheric Administration, Department of Commerce, Washington, D.C. 20230.

March 2—Nominations for the United States Delegation to the June IWC meetings are due to the Administrator. All persons wishing to be considered pursuant to the Department of Commerce recommendation to the Department of State concerning the compostion of the Delegation should ensure that nominations are received by this date. Prospective Congressional advisors to the Delegation should contact the Department of State directly.

March 30—(approximate date) Anticipated Interagency Committee meeting following receipt of the preliminary agenda for the June IWC meetings which is due to be circulated by the IWC Secretariat on or before March 11. The meeting will review the preliminary agenda and proposed additions to this agenda, all of which will be available at the meeting. The date and location for this meeting will be confirmed as soon as the preliminary agenda is received.

April 6—Foward United States agenda changes to the IWC Secretariat.

April 16—Draft position papers due to the Administrator.

April 16 through June 17—Prenegotiations.

April 20—Due date for circulation of the provisional agenda by the IWC Secretariat. This "second draft" of the agenda reflects any additions submitted by members countries and stands until considered by the Comission at the opening session of its Annual Meeting.

May 11—Revised position papers due to the Administrator.

May 22—Final Interagency Committee Meeting to consider United States position papers and discuss arrangements for the Delegation's work.

May 26–June 7—Annual Meeting of the Scientific Committee, Eastbourne, England.

June 11–16—Technical Committee subcommittee and working group meetings (on aboriginal subsistence need for whaling, infractions, humane killing, nonconsumptive uses of whales, and such other meetings as may be scheduled), and preliminary meetings of the Finance and Administration Committee.

June 17—Meeting of the United States Delegation, site to be determined, Buenos Aires, Argentina.

June 18–23—36th Annual Meeting of the IWC, Buenos Aires, Argentina. Persons who would like to be included in these meetings may contact Dean Swanson at the address or telephone number provided above to obtain meeting times and locations.

Dated: October 12, 1983.

Carmen J. Blondin,

Deputy Assistant Administrator for Fisheries Resource Management, National Marine Fisheries Services.

[FR Doc. 83-28251 Filed 10-17-83; 8:45 am]

BILLING CODE 3510-22-M

North Pacific Fishery Management Council's Plan Management Team; Public Meeting

AGENCY: National Marine Fisheries Service, NOAA, Commerce.

SUMMARY: The North Pacific Fishery Management Council, established by Section 302 of the Magnuson Fishery Conservation and Management Act (Pub. L. 94-265, as amended), has established Plan Management Teams for fishery management plans (FMPs), initiated by the Council.

The Plan Management Team for the Bering-Chukchi Sea Herring FMP will meet with the Scientific and Statistical Committee (SSC) herring subgroup at the office of the North Pacific Fishery Management Council, 650 West 4th Avenue, Anchorage, Alaska, November 1, 1983. The purpose of the meeting is to address the following four-step research program proposed by the SSC:

1. Identify knowledge gaps, particularly in offshore stocks;

2. Look at experimental designs to fill these gaps;

3. Consider the utility of the North Pacific Fishing Vessel Owner's Association proposal in light of the above exercise, including costs of obtaining data; and

4. Make recommendations concerning the proposal or a modification thereof, considering necessary phasing of research and the need for a multi-year project.

This public meeting is scheduled for 9 a.m. to 5 p.m., but may be lengthened or shortened as necessary.

FOR FURTHER INFORMATION CONTACT: Jim H. Branson, Executive Director, North Pacific Fishery Management Council, P.O. Box 103136, Anchorage, Alaska 99510.

Dated: October 13,1983.

Joseph W. Angelovic,

Deputy Assistant Administrator for Science and Technology, National Marine Fisheries Service.

[FR Doc. 83-28296 Filed 10-17-83; 8:45 am]

BILLING CODE 3510-22-M

Salmon and Steelhead Advisory Commission; Public Meeting; Correction

AGENCY: National Marine Fisheries Service, NOAA, Commerce.

SUMMARY: This document corrects a public meeting notice of the Salmon and Steelhead Advisory Commission that was published on September 21, 1983, 48 FR 43074. The time of a meeting is to be changed.

FOR FURTHER INFORMATION CONTACT: H. A. Larkins, 206-527-6150.

In FR Doc. 83-25727, appearing at page 43074, the time is corrected in the second column, line 2, by changing "10:00 a.m." to read "8:00 a.m."

Dated: October 18, 1983.

Joseph W. Angelovic,

Deputy Assistant Administrator for Science and Technology, National Marine Fisheries Service.

[FR Doc. 83-28315 Filed 10-17-83; 8:45 am]

BILLING CODE 3510-22-M

Taking of Marine Mammals; Issuance of Permit

On August 3, 1983, Notice was published in the **Federal Register** (48 FR 35157) that an application had been filed with the National Marine Fisheries Service by Dr. Roger S. Payne, Weston Road, Lincoln, Massachusetts 01773, for a Permit to take by potential harassment, an unspecified number of humpback whales in various waters for the purpose of scientific research.

Notice is hereby given that on October 5, 1983, and as authorized by the provisions of the Marine Mammal Protection Act of 1972 (16 U.S.C. 1361-1407), and the Endangered Species Act of 1973 (16 U.S.C. 1531-1543), the National Marine Fisheries Service issued a Permit to Dr. Roger S. Payne, for the above taking, subject to certain conditions therein.

Issuance of this Permit, as required by the Endangered Species Act of 1973, is based on a finding that such Permit: (1) Was applied for in good faith; (2) will not operate to the disadvantage of the endangered species which are the subject of the Permit; and (3) will be consistent with the purposes and policies set forth in Section 2 of the Endangered Species Act of 1973. This Permit was also issued in accordance with, and is subject to, Parts 220 and 222 of Title 50 CFR, the National Marine Fisheries Service regulations governing endangered species Permits (39 FR 14357, November 27, 1974).

The Permit is available for review by interested persons in the following offices:

Assistant Administrator for Fisheries, National Marine Fisheries Service, 3300 Whitehaven Street, NW., Washington, D.C.;

Regional Director, National Marine Fisheries Service, Northeast Region, 14 Elm Street, Federal Building, Gloucester, Massachusetts 01930;

Regional Director, National Marine Fisheries Service, Northwest Region, 7600 Sand Point Way, NE., BIN C15700, Seattle, Washington 98115;

Regional Director, National Marine Fisheries Service, Southwest Region, 300 South Ferry Street, Terminal Island, California 90731; and

Regional Director, National Marine Fisheries Service, Alaska Region, P.O. Box 1668, Juneau, Alaska 99802.

Dated: October 12, 1983.

Carmen J. Blondin,

Deputy Assistant Administrator for Fisheries Resource Management, National Marine Fisheries Service.

[FR Doc. 83-28249 Filed 10-17-83; 8:45 am]

BILLING CODE 3510-22-M

Taking of Marine Mammals Incidental to Commercial Fishing Operations; Small Take Exemption

AGENCY: National Marine Fisheries Service, NOAA, Commerce.

ACTION: Proposed Action.

SUMMARY: The National Marine Fisheries Service is proposing to implement Section 101(a)(4) of the Marine Mammal Protection Act (MMPA), as amended, for cetaceans and pinnipeds except for walrus. This proposed action would provide a procedure for applicants to qualify for an exemption to the MMPA's moratorium on the taking of marine mammals for the incidental, but not intentional taking, of small numbers of non-depleted marine mammals by U.S. commercial fishermen.

DATES: Comments on the proposed action should be submitted on or before November 21, 1983.

ADDRESS: All comments should be submitted to the Assistant Administrator for Fisheries, National Marine Fisheries Service, Washington, D.C. 20235.

FOR FURTHER INFORMATION CONTACT: Mr. K. R. Hollingshead, Protected Species Division, Office of Protected Species and Habitat Conservation, National Marine Fisheries Service, Washington, D.C. 20235. Telephone: (202) 634-7529.

SUPPLEMENTARY INFORMATION:

Background

The Marine Mammal Protection Act of 1972 (16 U.S.C. 1361-1407) (MMPA) established a moratorium on the taking of marine mammals. A two-year exemption from the moratorium was established in the MMPA for commercial fishermen. Regulations governing the take of marine mammals incidental to commercial fishing operations were established at the conclusion of the exemption period to allow incidental taking under a general permit scheme which included individual vessel certificates of inclusion. Since 1974, general permits have been issued annually to domestic fishermen and, since 1977, to foreign fishermen within the U.S. fishery conservation zone (FCZ) when the Magnuson Fishery Conservation and Management Act extended MMPA jurisdiction to include the 200-mile FCZ.

Pub. L. No. 97-58 amended the MMPA in 1981 by adding Section 101(a)(4) [16 U.S.C. 1371(a)(4)]. This amendment directs the Secretary of Commerce during any period of five (5) consecutive years to allow the incidental but not intentional taking of small numbers of non-depleted species or stocks of marine mammals by citizens of the United States while engaged in commercial fishing operations. This exemption to the permitting requirements of Section 104 of the MMPA can be granted only if after notice and opportunity for public comment, the Secretary (1) finds that the *total* of such taking will have a negligible impact on such species or stocks and (2) provides guidelines pertaining to the establishment of a

cooperative system among the fishermen involved in the operation to monitor and report any such taking. Until these two conditions are satisfied, domestic fishing operations must remain under the general permit system established by Section 104 and regulations established by Section 103 of the MMPA. (See 50 CFR 216.24).

The National Marine Fisheries Service (NMFS) published a Request for Information and Advanced Notice of Proposed Rulemaking on September 15, 1982 (47 FR 40676). This notice invited all interested parties, including representatives of the commercial fishing industry to submit suggestions on (1) individual fisheries by location and gear category that might qualify under this exemption, (2) the species and number of non-depleted marine mammals likely to be taken in the fishery, (3) the manner of taking and means of minimizing the total number of takes and to reduce impacts on individual animals, and (4) guidelines pertaining to establishment of a cooperative reporting system for monitoring the incidental take in the fishery.

Information Received

Comments and suggestions were received from the Oregon Department of Fish and Wildlife, Washington State Department of Game, the North Pacific Fishing Vessel Owner's Association and the Whale Center. All but the Whale Center suggested individual fisheries which might be included under the proposed exemption. The Washington Department of Game suggested a grant be given to sample the fisheries and develop a baseline for marine mammal takes while the State of Oregon proposed a cooperative State/Federal reporting system. The Whale Center recommended caution in making determinations for exemptions based on non-objective sources. All four respondents gave assurances of future cooperation.

All information submitted is available on request from the Director, Office of Protected Species and Habitat Conservation, National Marine Fisheries Service, Washington, D.C. 20235.

Proposed Action

The NMFS proposes to implement this new amendment and allow those fisheries in specific geographic areas that take a small number of marine mammals incidental to fishing operations to obtain a waiver from the MMPA moratorium in compliance with Section 101(a)(4) of the Act. This five-year waiver can be granted provided the applicant can supply information that the total taking will have a negligible impact on the species or stocks involved and has demonstrated a capability to establish a system for reporting incidental takes of marine mammals that is acceptable to the Assistant Administrator for Fisheries.

Definitions

For these small take guidelines, the following definitions apply:

"Incidential, but not intentional, taking" means an accidental taking. It does not mean that the taking is unexpected, but rather that it includes those takings which are infrequent, unavoidable or accidential.

"Negligible impact" means an impact which an be disregarded or which is so small or unimportant, or of so little consequence as to warrant little or no attention. A finding of negligible impact cannot be made if a species or stock is listed as depleted in 50 CFR 216.15 or as threatened or endangered under the Endangered Species Act of 1973.

"Small numbers" means a portion of a marine mammal species or stock whose removal has a negligible impact on the species or stock.

"U.S. citizens" means individual U.S. citizens or any partnership, corporation, association or similar entity (whether or not it is organized under the laws of any State) if it is controlled by individuals who are U.S. citizens.

Application Instructions

In order for the National Marine Fisheries Service to consider an exemption from the General Permit requirements of 50 CFR 216.24, to take small numbers of marine mammals during commercial fishing operations, a written request must be submitted to the Assistant Administrator for Fisheries, National Marine Fisheries Service, Washington, D.C. 20235. Requests for an exemption are limited to U.S. citizens and shall be for a specific fishery within a specified geographical region. Individuals may not apply for a small take exemption unless they are duly authorized representatives of a fishery and have the capability and authority to establish a system for reporting all incidental takes and to receive and collate these reports. Requests for an exemption must include the following information:

1. A detailed description of the fishery, including the type of gear used, species of fish sought, seasonality of the fishery, area of operations, number of participating fishermen and/or vessels, and the known interactions of the fishery with marine mammals.

2. The number of species of marine mammals expected to be taken annually and the reason the mammals are taken.

3. A description of the status and distribution of the affected species or stocks likely to be affected by the fishery so that a negligible impact determination can be made.

4. A description of the reporting system to be used by the fishermen to facilitate the reporting of any incidental takes. Such information should include:

a. Copies of the reporting form to be utilized;

b. Name and address of person to whom completed forms will be sent;

c. Person who will be reasonsible for collating them; and

d. Proposed schedule and mechanism by which information on taking will be conveyed to the Assistant Administrator for Fisheries.

5. Any other information which the National Marine Fisheries Service may subsequently request.

Upon receipt of a signed application, the Assistant Administrator shall determine the adequacy and completeness of a request and in that connection may waive any requirement for information, or require either elaboration or further information which may be deemed necessary. If the application is found adequate, the National Marine Fisheries Service will invite public comment on the request through publication in the **Federal Register.**

After a 30-day comment period, the Assistant Administrator for Fisheries will determine whether the total taking constitutes a negligible impact on the species or stocks of marine mammals based on public comments received and on the bast scientific evidence available. If a determination can be made that the level of taking in the applicant's fishery will be consistent with the finding that the total of such taking will have a negligable impact on the marine mammal species or stocks, the Assistant Administrator for Fisheries will issue a Notice of Exemption through the **Federal Register.** Exemptions will be valid for a specified period of up to five years. An accompanying Letter of Exemption to the applicant will specify any terms or conditions relating to reducing the take of marine mammals in the fishery and any guidelines relating to the cooperative system for reporting marine mammal takings.

A Notice of Exemption may be withdrawn or suspended for a time certain if after notice and opportunity for comment, the Assistant Administrator determines that either (1) the taking is having more than a

negligable impact on the species or stocks of marine mammals concerned or (2) the policies, purposes and goals of the MMPA, including the well-being of the marine mammals involved would be better served under the general permit provisions of the Marine Mammal Protection Act.

Conditions

1. A participant operating in a fishery covered by a Letter of Exemption may take marine mammals as long as the taking is an incidental occurrence in the course of normal commercial fishing operations and the fisherman is registered with the individual or organization responsible for compiling reports of marine mammal mortality.

2. A participant shall take such steps as are necessary to minimize the impact of taking or the actual take of marine mammals without inflicting death or injury to any marine mammal. Such steps may include the judicious use of non-lethal harassment such as sonic devices, "cracker" bombs and other non-lethal repellant devices to prevent net entanglement or similar occurrences that would increase jeopardy to the animal. Participants may not injure or kill the marine mammal causing the depredation unless the animal is actually causing immediate and substantial damage to the gear or is about to cause immediate personal injury.

3. Marine mammals taken in the course of commercial fishing operations must be immediately returned to the environment where captured without further injury. Marine mammals may not be retained by the fisherman except in cooperation with an individual holding a valid scientific research permit authorized by Section 101(a)(1) and 104 of the Marine Mammal Protection Act.

Reporting Requirements

1. All participants in the fishery must maintain records of incidental take of marine mammals in such a form as agreed upon by the holder of the Letter of Exemption and the National Marine Fisheries Service. At a minimum, reports must include:

a. The date and location of the taking classified by entrapment or entanglement and whether it caused serious injury or death;

b. the identity and number by species of marine mammals taken and, of those taken, the number killed or injured (noting which animals and number were killed, injured or released unharmed); and

c. the amount of time actually fished that day, the approximate amount of fish caught on and duration of the vessel-trip, and/or the type and amount of gear used.

2. If there are individuals in the fishery covered by a Letter of Exemption who are not participating in the reporting scheme, then the holder of the Letter of Exemption will be expected to estimate for those non-participants, the total number of hours fished and the amount of tonnage of fish caught so that an estimate of the total taking by the fleet can be made.

3. The holder of a Letter of Exemption willl be expected to compile these individual participant reports and forward a summary and assessment at least once a year to the Assistant Administrator for Fisheries.

4. Failure to comply with the conditions of the Letter of Exemption may result in actions leading to the suspension or withdrawal of the Exemption and a reimposition of the general permit requirements of the Marine Mammal Protection Act.

Dated: October 12, 1983.

Carmen J. Blondin,

Deputy Assistant Administrator for Fisheries Resource Management, National Marine Fisheries Service.

[FR Doc. 83-28250 Filed 10-17-83; 8:45 am]

BILLING CODE 3510-22-M

National Technical Information Service

Government-Owned Inventions; Availability for Licensing

The inventions listed below are owned by agencies of the U.S. Government and are available for licensing in the U.S. in accordance with 35 U.S.C. 207 to achieve expeditious commercialization of results of federally funded research and development. Foreign patents are filed on selected inventions to extend market coverage for U.S. companies and may also be available for licensing.

Technical and licensing information on specific inventions may be obtained by writing to: Office of Government Inventions and Patents, U.S. Department of Commerce, P.O. Box 1423, Springfield, Virginia 22151.

Please cite the number and title of inventions of interest.

Douglas J. Campion,

Program Coordinator, Office of Government Inventions and Patents, National Technical Information Service, U.S. Department of Commerce.

Patents by Agency

Department of Agriculture
- SN 6-370,009 (4,405,806), Bromine-Containing 2,4-Diaminotriazines
- SN 6-212,655 (4,400,391), Controlled Release of Bioactive Materials Using Alginate Gel Beads
- SN 6-258,489 (4,401,156), Controlled Release of Bioactive Materials Using Alginate Gel Beads
- SN 6-345,455 (4,400,114), Earth Anchor Apparatus and Method
- SN 6-258,506 (4,400,983), Mechanical Buncher for Leafy Vegetables
- SN 6-473,396 (4,405,514), Preparation of Esters of Resin Acids, Resins, Rosins, and Derivatives Thereof

Department of Commerce
- SN 6-300,363 (4,398,293), Frequency Stabilization for Two-Mode Laser

Department of Health and Human Services
- SN 6-239,015 (4,397,310), Anastigmatic High Magnification, Wide-Angle Binocular, Indirect Attachment for Laser Photocoagulator
- SN 6-331,989 (4,405,611), Bisulfite Stabilization of 5-Azacytidine
- SN 6-110,293 (4,404,182), Ethiodized Oil Emulsion for Intravenous Hepatography
- SN 6-222,936 (4,398,101), Four Input Coincidence Detector
- SN 6-262,806 (4,403,985), Jet Controlled Catheter
- SN 6-279,443 (4,405,712), LTR-Vectors
- SN 6-341,572 (4,397,843), Mannose-6-Phosphate-Low Density Protein Reagent Effective Against Hypercholesterolemia
- SN 6-495,725, Monoclonal Antibodies Against Non Small Cell Lung Cancer
- SN 6-339,886 (4,405,720), Silver Stains for Protein in Gels

Department of the Air Force
- SN 6-512,070, Beam Addressed Memory System
- SN 6-307,347 (4,393,198), Copolymers From Octafluoronaphthalene
- SN 6-300,761 (4,391,660), Copper Containing Ballistic Additives
- SN 6-387,580 (4,393,101), Diethynylebenzene-Ethynylpyrene Copolymers
- SN 6-512,847, Electroding of Multi-Layered Epitaxial Structures
- SN 6-515,240, Elevated transient Temperature Leak Test for Unstable Microelectronic Packages
- SN 6-195,693 (4,392,775), Flat Workpiece Pickup
- SN 6-232,094 (4,392,624), Implanted Boundary Layer Trip
- SN 6-512,062, Loading Dolly
- SN 6-283,245 (4,395,469), Low Pressure Nickel Hydrogen Battery
- SN 6-201,860 (4,392,709), Method of Manufacturing Holographic Elements for Fiber and Integrated Optic Systems
- SN 6-512,083, Modular Air Shut-Off Valve
- SN 6-506,919, Pocket Size Antenna Match Indicator
- SN 6-300,762 (4,395,684), R.F. Primed Plasma Limiter for Radar Receiver Protector
- SN 6-368,785 (4,393,997), Removabled Secondary Aircraft Fuel Enclosure
- SN 6-512,064, Simultaneous Signal Detection for IFM Receivers by Transient Detection
- SN 6-308,973 (4,394,223), Tin and Gold Plating Process

Department of the Army
- SN 6-510,710, A solid Propellant Sound Generator for Coagulation of Aerosols

SN 6-510,698, Antiarmor Weapon System
SN 6-524,716, Apparatus for Determining SMR Codes
SN 6-507,660, Discrete Step Actuation System
SN 6-511,602, Dual Field-of-View Optical Target Detector
SN 6-510,709, Erectable Large Optic for Outer Space Application
SN 6-517,613, Improved Dielectric Waveguide Ferrite Resonance Isolator
SN 6-512,831, Infrared Beacon
SN 6-526,848, Interference Cancelling Receiver Having High Angular Resolution Transmitted Radiators
SN 6-517,191, Interference Cancelling Transmitter
SN 6-574,423, Light Operated Measuring System Cross-Reference to Related Application
SN 6-522,949, Low Power Radio Synthesizer with Harmonic Identification Feature
SN 6-524,614, Magnetic Fluid Gyro Bearing and Caging Mechanism
SN 6-517,614, Method and Apparatus for Dispersive Signal Processing
SN 6-527,054, Optical Interface to an Electrical Central Office
SN 6-519,460, Patin Analysis Paper
SN 6-527,714, Percussion Initiated Spotting Charge
SN 6-525,374, Push-Pull Pulsed Gas Laser
SN 6-509,577, Quick access Splice for Missile Sections
SN 6-526,735, Small Angular Beamwidth Antenna System
SN 6-528,837, Solid State Relay With Fast Turnoff
SN 6-224,776, Unsymmetrical Polynitrocarbonates and Symmetrical 1,3-Bis(Halo-and Nitroalkyl Carbonyldioxy)-2,2-Dinitropropanes and Methods of Preparation

Department of the Interior
SN 6-168,823 (4,404,523), Readout Circuit for Linear Displacement Transducer
SN 6-348,118 (4,401,632), Recovery of Arsenic from Flue Dust

[FR Doc. 83-28330 Filed 10-17-83; 8:45 am]
BILLING CODE 3510-04-M

COMMITTEE FOR THE IMPLEMENTATION OF TEXTILE AGREEMENTS

Soliciting Public Comment on Bilateral Textile Consultations With the Government of Hong Kong To Review Trade in Category 315

October 13, 1983.

ACTION: On September 30, 1983 the Government of the United States requested consultations with the Government of Hong Kong with respect to Category 315 (cotton printcloth). This request was made on the basis of the agreement of June 23, 1982, as amended, between the Governments of the United States and Hong Kong relating to trade in cotton, wool and man-made fiber textiles and textile products.

The purpose of this notice is to advise the public that, if no solution is agreed upon in consultations between the two governments, the Committee for the Implementation of Textile Agreements may later establish a limit for the entry and withdrawal from warehouse for consumption of textile products in Category 315, produced or manufactured in Hong Kong and exported to the United States during the twelve-month period which began on January 1, 1983 and extends through December 31, 1983. The Government of the United States also reserves the right to control imports of these categories at the established limits.

Any party wishing to comment or provide data or information regarding the treatment of Category 315 under the bilateral agreement, or on any other aspect thereof, or to comment on domestic production or availability of textile products included in this Category is invited to submit such comments or information in ten copies to Walter C. Lenahan, Chairman, Committee for the Implementation of Textile Agreements, International Trade Administration, U.S. Department of Commerce, Washington, D.C. 20230. Since the exact timing of the consultations is not yet certain, comments should be submitted promptly. Comments or information submitted in response to this notice will be available for public inspection in the Office of Textiles and Apparel, Room 3100, U.S. Department of Commerce, 14th and Constitution Avenue, NW., Washington, D.C., and may be obtained upon written request.

Further comment may be invited regarding particular comments or information received from the public which the Committee for the Implementation of Textile Agreements considers appropriate for further consideration.

The solicitation of comments regarding any aspect of the agreement or the implementation thereof is not a waiver in any respect of the exemption contained in 5 U.S.C. 553(a)(1) relating to matters which constitute "a foreign affairs function of the United States."

Walter C. Lenahan,

Chairman, Committee for the Implementation of Textile Agreements.

[FR Doc. 83-28274 Filed 10-17-83; 8:45 am]
BILLING CODE 3510-25-M

CONSUMER PRODUCT SAFETY COMMISSION

[CPSC Docket 84-C0001]

Richard E. Nichols and Cheri Nichols, Individuals Doing Business as Cotton Dreams; Provisional Acceptance of a Consent Order Agreement

AGENCY: Consumer Product Safety Commission.

ACTION: Provisional acceptance of a Consent Order Agreement under the Flammable Fabrics Act.

SUMMARY: Under requirements of 16 CFR 1605.13, the Commission must publish in the **Federal Register** consent agreements which it provisionally accepts under the Flammable Fabrics Act. Published below is a provisionally-accepted Consent Order Agreement with Richard E. Nichols and Cheri Nichols, individuals doing business as Cotton Dreams.

DATES: Any interested person may ask the Commission not to accept this agreement by filing a written request with the Office of the Secretary by November 2, 1983.

ADDRESS: Persons wishing to comment on this Consent Order Agreement should send written comments to the Office of the Secretary, Consumer Product Safety Commission, Washington, D.C. 20207.

FOR FURTHER INFORMATION CONTACT: Stephen E. Joyce, Directorate for Compliance and Administrative Litigation, Consumer Product Safety Commission, Washington, D.C. 20207; telephone (301) 492-6626.

Dated: October 13, 1983.

Sadye E. Dunn,

Secretary.

SUPPLEMENTARY INFORMATION: In the Matter of Richard E. Nichols and Cheri Nichols, d.b.a. Cotton Dreams; Consent Order Agreement.

Richard E. Nichols and Cheri Nichols, doing business as Cotton Dreams, under the laws of the State of Florida (hereinafter, Respondents) enter into this Consent Order Agreement (hereinafter, Agreement) with the staff (hereinafter, the Staff) of the Consumer Product Safety Commission (hereinafter, the Commission) pursuant to the procedure for consent order agreements contained in Section 1605.13 of the Commission's Procedures for Investigations, Inspections, and Inquiries under the Flammable Fabrics Act (FFA), 16 CFR Part 1605.

This Agreement and Order are for the sole purpose of settling the allegations of the staff that Respondent has sold

certain noncomplying children's sleepwear, in violation of the Flammable Fabrics Act and the standards, rules, and regulations thereunder as more fully set forth in the complaint accompanying this agreeement.

Respondents and the Staff Agree

1. The Consumer Product Safety Commission has jurisdiction in this matter under the following Acts: The Flammable Fabrics Act (15 U.S.C. 1191 et seq.); the Federal Trade Commission Act (15 U.S.C. 41 et seq.); and the Consumer Product Safety Act (15 U.S.C. 2051 et seq.).

2. Cotton Dreams is a name used by Richard E. Nichols and Cheri Nichols; Cotton Dreams is organized and does business under the laws of the State of Florida; is engaged in the sale of articles of children's playwear considered by the Commission to be sleepwear; and has its principal place of business and address located at 9090 U.S. 1, Wabasso, Florida 32970.

3. Richard E. Nichols does business as Cotton Dreams and controls its acts, practices and policies.

4. Cheri Nichols does business as Cotton Dreams and controls its acts, practices and policies.

5. Respondents are now and have been engaged in one or more of the following:

a. The manufacture for sale, the sale, or the offering for sale, in commerce, or the importation into the United States, and the introduction, delivery for introduction, transportation or causing to be transported, in commerce, or the sale or delivery after sale or shipment in commerce, of a product, fabric, or related material which is subject to the requirements of the Flammable Fabrics Act (15 U.S.C. 1191 *et seq.*), the Standard for Flammability of Children's Sleepwear: Sizes 0 through 6X (FF 3–71), and the implementing rules and regulations (16 CFR Part 1615); and

b. The importation into the United States, or the manufacture for sale, the sale, or the offering for sale of a product made of fabric or related material, which has been shipped or received in commerce and which is subject to the requirements of the Flammable Fabrics Act, the Standard for the Flammability of Children's Sleepwear: Sizes 0 through 6X (FF 3–71), and the implementing rules and regulations; and

c. The manufacturing for sale, or the offering for sale, in commerce, or the importation into the United States, and the introduction, delivery for introduction, transportation or causing to be transported, in commerce, or the sale or delivery after sale or shipment in commerce, of a product, fabric, or related material which is subject to the requirements of the Flammable Fabrics Act (15 U.S.C. 1191 *et seq.*), the Standard for the Flammability of Children's Sleepwear: Sizes 7 through 14 (FF 5–74), and the implementing rules and regulations (16 CFR Part 1616); and

D. The importation into the United States, or the manufacture for sale, the sale, or the offering for sale, of a product made of fabric or related material, which has been shipped or received in commerce, and which is subject to the Flammable Fabrics Act, the Standard for Flammability of Children's Sleepwear: Sizes 7 through 14 (FF 5–74), and to the implementing rules and regulations.

6. this Agreement is for settlement purposes only, does not constitute an admission by Respondents they have violated the law, and becomes effective only upon its final acceptance by the Commission and service of the incorporated Order (herinafter, Order) upon Respondents.

7. A 2-piece garment such as that described in paragraph IV(D) of the attached Order with or without a collar, with sleeves, and without attached feet, made of 100% cotton rib-knit fabric is not an item of children's Sleepwear.

8. Respondents waive (a) all requirements for findings of fact and conclusions of law in the disposition of this matter, and (b) administrative and judicial review of the facts and proceedings. This Agreement and the Complaint accompanying the Agreement may be used in interpreting the Order.

9. Violation of the provisions of the Order may subject Respondents to a civil penalty of not more than $10,000 for each such violation.

10. The Commission may disclose the terms of this Consent Order Agreement.

11. The requirements of this Order are in addition to, and not to the exclusion of, other remedies such as criminal penalties which may be pursued under section 7 of the FFA.

12. No agreement, understanding, representation or interpretation not contained in this Agreement or Order may be used to vary or contradict the terms of the Order.

Uppon acceptance of this Agreement, the Commission may issue the following Order:

Order

I

It is hereby ordered that Respondents, their successors and assigns, agents, representatives and employees, directly or through any corporation, subsidiary, division or other device, do forthwith cease and desist from selling or offering for sale, in commerce, or importing for sale, in commerce, or importing into the United States, or introducing, delivering for introduction, transporting or causing to be transported, in commerce, or selling or delivering after sale or shipment in commerce, any product, fabric, or related material which fails to conform to the Standard for the Flammability of Children's Sleepwear: Sizes 0 through 6X (FF 3–71) (16 CFR Part 1615); the Standard for the Flammability of Children's Sleepwear: Sizes 7 through 14 (FF 5–74) (16 CFR Part 1616) or the Standard for the Flammability of Clothing Textiles (16 CFR Part 1610). These standards were issued, amended and continue in effect under the provisions of the Flammable Fabrics Act. For purposes of this Order, whether a product of wearing apparel is intended to be worn for sleeping or activities related to sleeping depends on many factors including: (a) The suitability for use by children for sleeping or activities related to sleeping, (b) the manner in which the product is distributed or promoted, and (c) the likelihood that the product will be used for sleeping or activities related to sleeping.

II

It is further ordered that Respondents consider before importing or selling any style garment, subject to this Order: (a) the sleeping or activities related to sleeping, (b) the manner in which the product is distributed or promoted, and (c) the likelihood that the product will be used by children primarily for sleeping or activities related to sleeping.

III

It is further ordered that Respondents maintain records to demonstrate that they have considered each of the three factors enumerated in paragraph II, above, before deciding to import and/or sell any style garment. These records must be maintained for one year beyond such time as they have ceased the importation, sale or distribution of the individual garment.

IV

It is further ordered that from the date this Order becomes effective, Respondents, their authorized agents, assigns, successors, authorized representatives and authorized employees, directly or through any corporation, subsidiary, division or other device, forthwith cease and desist from selling or offering for sale, in commerce, or importing into the United States, or introducing, delivering for introduction, transporting or causing to be transported, in commerce, or selling

or delivering after sale or shipment in commerce, the following styles of garments irrespective of color and trim which the Commission staff has alleged do not comply with the Standard for Flammability of Children's Sleepwear: Sizes 0 through 6X (FF 3–71), 16 CFR Part 1615, or the Standard for Flammability of Children's Sleepwear: Sizes 7 through 14 (FF 5–74), 16 CFR Part 1616:

(A) Style #127, Long Flannel, Grandpa Shirt. A 100% cotton snap-front, ankle-length flannel shirt, with or without sleeves and with or without a collar. Attachment A is a picture of the style of garment that is the basis for this prohibition.

(B) Item #W128, Infants Striped Daygown. A long gown with a buttoned neck, drawstring bottom, ribbed cuffs and neck made of 100% cotton knit fabric. Attachment B is a picture of the style of garment that is the basis for this prohibition.

(C) Item #152, Flannel Daygown. A midcalf or longer gown, with or without sleeves, made of 100% cotton flannel fabric. Attachment C is a picture of the style of garment that is the basis for this prohibition.

(D) Item #2P79L, 2-piece Striped Playsuit. A two-piece garment with or without a collar, with sleeves, and attached feet, made of 100% cotton rib-knit fabric. Attachment D is a picture of the style of garment that is the basis for this prohibition. This garment without attached feet is not sleepwear.

V

It is further ordered that, Respondents permit the Commission staff to conduct inspections to determine compliance with this Order and to select samples of sleepwear or related articles of clothing in inventory at Respondents' place of business.

VI

It is further ordered that, for a period of ten (10) years from the date this Order becomes final within the meaning of the Federal Trade Commission Act, Respondents notify the Commission at least thirty (30) days prior to the event, of any proposed change in their business, such as incorporation, dissolution, assignment, or sale resulting in the emergence of another business; the creation or dissolution of subsidiaries; or any other change in the way Respondents do business which may affect compliance obligations arising out of this Order;

Any agreement, understanding, representation, or interpretation that is not contained in this Agreement and the incorporated Order may not be used to vary or contradict the terms of the Order subsequently issued by the Commission.

Signed this 28th day of July, 1983.

RICHARD E. NICHOLS,

d/b/a Cotton Dreams.

CHERI NICHOLS,

d/b/a Cotton Dreams.

Stephen E. Joyce,

Counsel for the Commission Staff.

By direction of the Commission, this Consent Order Agreement is provisionally accepted pursuant to 16 CFR 1605.13, and shall be placed on the public record, and the Commission shall announce provisional acceptance of the Consent Order Agreement in the Commission's Public Calendar and in the **Federal Register.**

So ordered by the Commission, this 13th day of October, 1983.

Sadye E. Dunn,

Secretary, Consumer Product Safety Commission.

[FR Doc. 83–28352 Filed 10–17–83; 8:45 am]

BILLING CODE 6355–01–M

DEPARTMENT OF DEFENSE

Department of the Air Force

USAF Scientific Advisory Board; Meeting

The USAF Scientific Advisory Board Aeronautical Systems Division Advisory Group will meet at Wright-Patterson AFB, OH, Bldg. 14, Area B, Room 222, November 9 and 10, 1983. The purpose of the meeting will be to receive classified briefings and hold classified discussions on selected programs and projects relating to the missions of the Aeronautical Systems Division. The meeting will convene at 8:30 a.m. and adjourn at 5:00 p.m. on the 9th and convene at 8:30 and adjourn at 1:00 p.m. on the 10th.

The meeting concerns matters listed in Section 552(c) of Title 5, United States Code, specifically subparagraph (1) thereof, and accordingly, will be closed to the public.

For further information, contact the Scientific Advisory Board Secretariat, Mr. Jim Coleman, at (513) 255–4002 or autovon 785–4002.

Dated: October 10, 1983.

Winnibel F. Holmes,

Air Force Federal Register, Liaison Officer.

[FR Doc. 83–28264 Filed 10–17–83; 8:45 am]

BILLING CODE 3910–01–M

Department of the Army

Draft Environmental Impact Statement; Supplement No. 1, Ouachita River and Tributaries, Ouachita River Levees, Louisiana

AGENCY: U.S. Army Corps of Engineers, DOD.

ACTION: Notice of Intent to prepare a Draft Environmental Impact Statement, Supplement No. 1 (DEIS/Supp. No. 1).

SUMMARY: a. *Description of Action:* The proposed action involves raising existing Quachita River levees in Louisiana to project design flow line (167-year event) grade. The tentatively selected plan consists of: (a) Raising 40.7 miles of existing east bank levee from 1.5 feet to 5 feet to the 1956 project design flow line (167-year event) grade; (b) rehabilitation of 68 deteriorated drainage structures associated with the levee system; (c) 9 levee setbacks or bank stabilization to protect levee sections from erosion; (d) gravelling portions of the levee for flood-fight access; and (e) raising 11.7 miles of loop levees to the 1956 project design flow line grade on the Ouachita River west bank at West Monroe, Bawcomville, and Columbia, Louisiana.

b. *Alternatives:* Additional alternatives formulated and evaluated are: (a) No action; (b) raising levees to the Standard Project Design grade (500+-year event); and (c) four floodway options.

c. *Description of Scoping Process:*

(1) *Public involvement.* Coordination with the general public and interested agencies has been maintained throughout the feasibility study.

(2) *Issues analyzed in the EIS supplement.* Impacts of the proposed action on the social/economic well-being, the aquatic ecosystems, the terrestrial ecosystems, prime farmlands, endangered species, cultural resources, and wetlands.

(3) *Environmental review and consultation requirements.* Environmental review will be conducted in accordance with requirements of the National Environmental Policy Act of 1969, Council on Environmental Quality Regulations (40 CFR, Parts 1500–1508), and all other applicable laws and statutes, and Corps of Engineers regulations and guidance.

(4) *Scoping Meeting Scheduled:* No public scoping meeting is planned. However, comments from interested members of the public and private sectors are invited.

(5) *Date the EIS supplement will be available to the public.* April 1984.

ADDRESS: Questions concerning the draft EIS supplement can be directed to: Ms Maryetta Smith, U.S. Army Corps of Engineers, Vicksburg District, Environmental Analysis Branch, P.O. Box 60, Vicksburg, Mississippi 39180. Telephone: FTS—542-5433, Commercial—(601) 634-5433.

Dated: October 7, 1983.

Dennis J. York,

Colonel, Corps of Engineers, District Engineer.

[FR Doc. 83-28259 Filed 10-17-83; 8:45 am]

BILLING CODE 3710-GX-M

DELAWARE RIVER BASIN COMMISSION

Commission Meeting and Public Hearing

Notice is hereby given that the Delaware River Basin Commission will hold a public hearing on Wednesday, October 26, 1983, beginning at 1:30 p.m. in the Reidy Room of Shawnee Inn, Shawnee-on-Delaware, Pennsylvania. The hearing will be a part of the Commission's regular business meeting, which is open to the public.

An informal pre-meeting conference among the Commissioners and staff will be open for public observation at about 11:00 a.m. in Club Room Number Two of Shawnee Inn.

The subjects of the hearing will be as follows:

Water Resources Program. A proposed annual Water Resources Program has been prepared in accordance with Section 13.2 of the Delaware River Basin Compact. The Program summarizes basin water resource needs and programs over the six year period from 1983 through 1988 including water supply, pollution control, flood protection and other functional aspects of water management with which the Commission is concerned. Copies of the draft Water Resources Program are available from the Commission upon request. Written testimony postmarked or received by the Secretary by November 9, 1983 will be inluded in the hearing record.

Applications for Approval of the Following Projects Pursuant to Article 10.3, Article 11, and/or Section 3.8 of the Compact

1. *West Chestnut Realty Corporation (D-78-87 Revised).* A revised spray irrigation—sewage treatment project to serve Hershey's Mill Village in East Goshen Township, Chester County, Pennsylvania. The applicant proposes to reduce buffers, expand the spray field area and increase the volume of effluent sprayed from .0638 million gallons per day (mgd) to a maximum of 0.424 mgd during summer (annual average of 0.256 mgd). Treatment will consist of aeration and disinfection prior to land application of the effluent. The project site is located in the Ridley Creek Watershed, a tributary to the Delaware River.

2. *Myerstown Water Authority (D-81-67 CP).* An application for a ground water withdrawal project to augment existing supplies for the applicant's distribution system in Lebanon County, Pennsylvania. The applicant experienced water shortages during drought conditions of 1980-1982 and proposes to operate two new wells (Nos. 6 and 8) to insure adequate water supplies during future dry periods. Well No. 6, located in Jackson Township, will supply up to 0.40 mgd of water and Well No. 8, located in the Borough of Myerstown, is expected to supply up to 0.72 mgd of water. Total withdrawls from all wells in the applicant's system are expected to average 0.80 mgd by 2005.

3. *Crown Zellerbach Corporation (D-83-19).* A ground water withdrawal project to obtain approval for the use of additional non-contact cooling water at the applicant's Advanced Films Division plant near the city of New Castle in New Castle County, Delaware. The use of ground water has increased above previous DRBC limits to an average of 0.47 mgd as a result of plant expansion, recurring cooling equipment failures and an antiquated chilling system. The DNREC has conditioned its approval of this increased withdrawal on a conservation compliance schedule requiring water use reductions to 0.200 mgd by September, 1985. The cooling water supplied by Well Nos. 7 and 3 (standby) will continue to dischage to the Delaware River.

4. *James River Corporation (D-83-20).* Modification of an industrial waste treatment facility at the applicant's Riegel Division Paper Manufacturing Plant in Holland Township, Hunterdon County, New Jersey. The facility will be designed for removal of BOD_5, suspended solids, coliforms, and color from a waste water flow of approximately 2.1 mgd. Treated effluent will continue to discharge to a tail race which joins the Musconetcong River 1.2 miles downstream from the discharge point in Holland Township.

Documents relating to these projects may be examined at the Commission's offices and preliminary dockets are available in single copies upon request. Please contact David B. Everett. Persons wishing to testify at this hearing are requested to register with the Secretary prior to the hearing.

Susan M. Weisman,

Secretary.

October 11, 1983.

[FR Doc. 83-28261 Filed 10-17-83; 8:45 am]

BILLING CODE 6360-01-M

DEPARTMENT OF ENERGY

Office of Energy Research

University Research Instrumentation Program

AGENCY: Department of Energy.

ACTION: Change to proposed program solicitation.

SUMMARY: On June 7, 1983, the Department of Energy, Office of Energy Research, requested public comments on a proposed program solicitation for the University Research Instrumentation (URI) Progam. DOE is establishing this program in response to the overall national concern about the shortage of state-of-the-art instrumentation available to universities and colleges. An amount of $4,000,000 has been made available for this program in Fiscal Year 1984. The proposed URI program solicitation has been revised and reflects the comments received from university research adminstrators, industrial representatives, and DOE staff. Today, DOE is publishing the revised program solicitation to give interested persons a preview of the official solicitation which the Department's Oak Ridge Operations Office is planning to release early in Fiscal Year 1984. Notice of the availability of the official solicitation will appear in the **Federal Register** and the *Commerce Business Daily.*

FOR FURTHER INFORMATION CONTACT: Dr. Israel Warshaw, Division of University and Industry Programs, Office of Field Operations Management, Office of Energy Research, Department of Energy, 1000 Independence Avenue, S.W., Washington, D.C. 20585, Telephone Number: (202) 252-6641.

SUPPLEMENTARY INFORMATION:

Background

The Department of Energy (DOE) plans to initiate a program intended to help reduce the shortage of state-of-the-art instrumentation required for energy-related research in universities and colleges. This program, the University Research Instrumentation program, is part of an interagency effort to help decrease the overall shortage, estimated to exceed one billion dollars, of research

equipment in universities. The Conference Report (H.R. Rep. No. 272, 98th Cong., 1st Sess. (1983)) for the act making appropriations for energy and water development for fiscal year 1984 identified $4,000,000 for university research instrumentation. Using this funding, DOE's Office of Energy Research will support approximately 8 to 15 grant awards in Fiscal Year 1984.

To help develop the URI program, the DOE requested public comments on a proposed program solicitation for the program in the **Federal Register** on June 7, 1983 (48 FR 26328–26331). The proposed program solicitation described the purpose and the scope of the program, eligibility requirements, evaluation and selection criteria, contents of review procedures for grant applications, and plans for continuing operation/administration of the program.

Twenty-seven written comments were received from university faculty and research administrators, industrial representatives, and DOE staff on the proposed URI program solicitation. All of the written comments were considered in arriving at the revisions adopted herein. The following discussion is a summary of the major substantive changes that have been made to the URI program solicitation resulting from those comments.

Changes to the Proposed Program Solicitation

The following changes have been made in the program's guidelines:

Change: Title of program has been changed from Energy Research Instrumentation (ERI) program to University Research Instrumentation (URI) program to coincide with the identification of the program in the Department of Energy's budget submission.

Section I. A. Program Description

Change: The appropriation recommended for this program by Congress in Fiscal Year 1984 hs been set at $4,000,000. This will enable the Department to make from 8 to 15 awards.

Section I. B. Eligibility and Limitations

Change: It is the intent of the program that eligible university groups have at least one on-going DOE award in the selected research area. The total minimum level of support required from DOE in the selected application area during the past two years is now reduced from $300,000 to $150,000. The revised amount is the average total for a DOE university research award for a two-year period. DOE believes that restricting eligibility to institutions which have performed research at this level will ensure that institutions which are best able to incorporate advanced instrumentation into their research programs will receive the grants.

Section II. Designated Research Areas

Change: All areas of energy research will be eligible, but in FY 1984 the funds will be used principally to provide the instrumentation required for research in four major areas (listed in alphabetical order). In order to indicate the potential breadth of the research in each area, a number of examples of related topics are given. Within each area no specific projects have preference relative to other possible related projects

Bioconversions Related to Energy

Metabolic aspects of fermentations and other pathways; molecular structure of key molecules and higher ordered biological entities in cells involved with energy transduction; chemistry of major substrates for bioconversion (e.g., lignocellulose); genetic manipulations involved with altering biological traits; biomass energy feed-stocks; etc.

Combustion

Heat transfer; fluidized bed combustion; kinetics and dynamics; combustion mechanics; hydrogen and other "exotic" fuels; solid and gaseous combustion by-products; pyrolysis; modelling of combustion processes, etc.

Nuclear Waste Isolation Research

Geologic factors; high temperature and high pressure chemistry; migration and diffusion of radioactive materials in geologic media and the oceans; immobilization of transuranium radiation damage; properties of ceramics containing high-level wastes; etc.

Turbulent and Multiphase Flow

Interface mechanics; solid suspensions in moving gases and liquids; effects of polymers on heat transfer; effects of changes of phase in moving matter; properties of fluids; etc.

Section III. B. Application Format

Change: The page limitation of 30 pages per application has been amended to exclude the pages for faculty resumes.

Section III. B. 3. c. Institution's plans for sharing the costs, ensuring the operation and maintenance of the equipment, and replacing the equipment at a future date

Change: The requirement that universities explain the need for equipment if similar instrumentation is located at other institutions within 100 miles has been deleted. Such an explanation is required if similar equipment is located at the institution.

Change: The requirement that an institution describe its plans for replacing the equipment when it becomes obsolete has been deleted.

Section V. B. 3. c. Cost Sharing

Change: At statement that "it is the Department's intent not to negotiate additional cost-sharing over that indicated in the application" has been added.

Section V. B. 3. d. Cost Sharing

Change: The requirement that an institution describe its plans for replacing the equipment when it becomes obsolete has been deleted.

Section VI. B. Number of Proposals Per Institution

Change: The maximum number of proposals which an institution may submit has been increased from three to four.

Section VII. Other information

Change: A statement that "it is contrary to DOE's intent for grantees to use research instrumentation or facilities provided by this program to provide services for a fee in direct competition with private companies that provide equivalent services" has been included in a new subsection, D. which concerns the use and operation of this equipment.

Section VII. A. Reports

Change: The number of years that annual reports need to be submitted be been reduced from five to two.

Clearance Under the Paperwork Reduction Act of 1980

Sections III, IV, and VII of the program solicitation have been determined to contain collection of information requirements subject to the Paperwork Reduction Act of 1980 (44 U.S.C. 3501 et seq.). The Office of Management and Budget (OMB) has issued a clearance to the Department (OMB No. 1901–0261) which covers these information collections through December 31, 1983.

(Catalog of Federal Domestic Assistance No. 81.077, University Research Instrumentation Program)

Issued in Washington, D.C. on October 7, 1983.

Alvin W. Trivelpiece,

Director, Office of Energy Research.

University Research Instrumentation Program

Table of Contents

I. Program Description
II. Principal Research Areas
III. Application Preparation and Format
IV. Estimate Cost and Budget
V. Method of Selection and Evaluation Criteria
VI. Submission of Applications
VII. Other Information

I. Program description

A. Background

The Department of Energy (DOE) announces a new program initiative intended to help strengthen the ability of universities and colleges to conduct long-range, energy-related research by assisting them in acquiring some of the specialized research instrumentation which is required. In the conference report for the act making appropriations for energy and water development for fiscal year 1984 (H.R. Rep. No. 272, 98th Cong., 1st Sess. (1983)), Congress identified $4,000,000 for university research instrumentation for fiscal year 1984. This amount will enable the Department to make from 8 to 15 awards. it is expected that most of the awards will be above $100,000. While all areas of energy research are eligible, in fiscal year 1984 the University Research Instrumentation (URI) program's funds will be used principally to meet the needs of established research groups with demonstrated capability in one of four energy areas (see Section II). The selected research area must be supported at least in part by DOE. Furthermore, the Department will consider only requests for the larger instruments, items costing about $100,000 or more, which are required to advance research in the designated area. Such instruments normally are required part-time by a number of faculty members and, therefore, it is difficult to justify purchasing the equipment in connection with an individual research project. DOE will consider funding instruments, such as scanning electron microscopes, nuclear magnetic resonance spectrometers, ion microprobes, laser diagnostic systems, etc.

This special program is complementary to and does not replace the Department's efforts to provide funds for equipment required on an individual research project supported through the cognizant research programs. Requests for such instrumentation should continue to be included in research proposals which are submitted to DOE's basic and technology research programs.

The Department expects that the equipment provided through this program should be avialable for a reasonable life span. Thus, DOE will be interested not only in how the institution will utilize the funds which the Department provides, but also the institution's plans for meeting related costs such as might be incurred in installing, operating, and maintaining the equipment during its effective life span.

An ancillary objective of this program is to ensure that graduate students are trained in the use of state-of-the-art equipment. Therefore, the number of graduate students associated with energy research projects which will utilize this equipment is of interest to DOE.

B. Eligibility and Limitations

Participation in the University Research Instrumentation program is limited to U.S. universities and colleges *which, during the past two calendar years, have conducted a minimum of $150,000 of DOE-sponsored research on-campus in the area for which the equipment is requested* (see Section II for the energy areas of principal interest in FY 1984).

DOE is establishing this limitation to ensure that the instrumentation acquired with these grants will significantly expand the research capability of institutions which have already demonstrated the capability to perform long range energy research. The Office of Energy Research believes that restricting eligibility to institutions which have performed $150,000 of DOE supported research over a two-year period will limit eligibility in this grant program to those institutions which, because of their existing commitment to energy research, are best able to incorporate advanced instrumentation into their research program.

Small research instruments (less than about $100,000 each) will not be eligible for consideration in this program. As noted above, funds for such instruments should continue to be included in proposals to the Department's cognizant research programs.

General purpose computing equipment is not eligible under this program. However, laboratory computers and associated peripherals dedicated for use in connection with the instrument(s) requested or for use with existing research instruments in the selected area(s) will be considered.

C. Clearance Under the Paperwork Reduction Act the collection of information requirements in Section III, IV, and VII of this solicitation have been approved by the Office of Management and Budget under No. 1901-0261.

II. Principal Research Areas

During FY 1984, DOE's URI program will be concerned primarily with capital equipment needed for on-campus research in four energy areas. These areas are listed below in alphabetical order. In order to indicate the potential breadth of the research in each area, a number of examples of related research topics are given. Within each area no specific projects have preference relative to other possible related projects.

1. *Bioconversions related to energy*—Metabolic aspects of fermentations and other pathways; molecular structure of key molecules and higher ordered biological entities in cells involved with energy transduction; chemistry of major substrates for bioconversion (e.g., lignocellulose); genetic manipulations involved with altering biological traits; biomass energy feedstock; etc.

2. *Combustion*—Heat transfer; fluidized bed combustion; kinetics and dynamics; combustion mechanics; hydrogen and other "exotic" fuels; solid and gaseous combustion by-products; pyrolysis; modeling of combustion processes; etc.

3. *Nuclear waste isolation research*—Geologic factors; high temperature and high pressure chemistry; migration and diffusion of radioactive materials in geologic media and the oceans; immobilization of trans-uranium elements; radiation damage; properties of ceramics containing high-level wastes; etc.

4. *Turbulent and multiphase flow*—Interface mechanics; solid suspensions in moving gases and liquids; effects of polymers on heat transfer; effects of changes of phase in moving matter; properties of fluids; etc.

While the equipment requested will be equally suitable and may be used for research on other energy-related topics, the need for the instrument(s) must be justified in terms of its value and ability to enhance the institution's capabilities in the principal energy-related research area described in the institution's application.

III. Application Preparation and Format

A. Objective

The principal objective of an application to DOE under this program is to demonstrate the potential impact of

the requested equipment, indicating how it will:

1. Enhance the technical excellence of the institution's on-campus research programs in the area(s) for which support is requested; and

2. Increase the institution's ability to conduct more advanced research in this area(s).

Furthermore, the application should demonstrate that the institution's current and/or recent applicable research projects:

1. Are of the highest scientific merit;

2. Are contributing to the Nation's need for knowledge and data on these topics; and

3. Are contributing to the training of advanced students.

B. Application Format (OMB No. 1901-0261)

Each application submitted to the URI program must be signed by the president of the institution or his/her designated officer and the principal investigator. *The application should not exceed 30 pages in length, excluding resumes, but including attachments, photographs, tables, illustrations, lists, etc.* The pages of the application should be numbered consecutively. To facilitate orderly review, the application should include the information and be written in order indicated below:

1. *Cover Sheet:* Photocopy and complete the form in Appendix A as page 1 of each copy of the application.

2. *Summary:* This should be a concise description of the application, not more than one double-spaced typewritten page. It should include a brief description of the equipment which will be purchased or fabricated, some comments on the applicable research programs, the impact of the equipment on the institution's research programs in the selected area, and indicate the institution's plans for sharing the costs in addition to the amount requested from DOE.

3. *Narrative.*

a. *Technical merit and accomplishments of the institution's research programs in the applicable energy areas, the institution's capability and commitment to energy research in the selected area and the potential for expanding/improving the program(s) with the acquisition of the requested equipment.* This section should discuss the applicable on-campus research programs requiring the equipment and should be aimed at persuading reviewers that the institution "historically" has had strong research programs in the principal area, and that the number and quality of such programs are likely to increase in the future.

Briefly describe the overall objectives of these programs. Discuss some specific projects, including the title, name of the sponsor, and the amount of funds involved.

How does this research program relate to the institution's view of its principal responsibilities in energy research? Give examples of the institution's efforts to foster and strengthen research in the principal area and its commitment to do so in the future.

Briefly describe the equipment requested and indicate the estimated cost. It is not necessary to describe the operation of the equipment unless it is likely to be unknown to researchers in the applicable field(s). Discuss the need for equipment and its expected impact on the institution's ability to develop and carry out more effective energy research programs in the designated areas.

On a separate page, list the institution's applicable research projects in the selected area during the last three years (including title, sponsor, total funds awarded, the period involved, and the approximate number of graduate students associated with each project). Also list some of the major accomplishments of the institution's applicable research projects during the last five years.

b. *The qualifications of the faculty associated with the principal research areas and the degree of faculty experience with similar equipment.* Briefly discuss the overall experience and capabilities of the faculty to conduct research in the applicable areas.

Very briefly discuss the extent to which the faculty whose research projects are related to the energy area discussed in this application have used this or similar equipment on or off campus in recent years.

In addition, provide vitae (a maximum of one page per person) for the principal faculty members associated with the research area described in the application.

c. *Institution's plans for sharing the costs from non-Federal sources and ensuring the operation and maintenance of the equipment.* The level of cost sharing will be a factor in the evaluation of the applications. It is the Department's intent not to "negotiate" additional cost sharing over that indicated in the application.

No specific fraction of cost sharing is required, but institutions are encouraged to seek funds from all available non-Federal sources. Although none of the program funds may be used to modify buildings or facilities, such non-Federal monies, as well as other current and future non-Federal funds which the institution indicates it will provide for maintenance and operation of the equipment will be considered as "cost sharing."

Estimate the usable life span of the equipment and discuss the institution's plans for ensuring its continued availability during the first five years. If similar equipment is located at the institution or has been purchased and is still to be delivered, why is the requested equipment required?

d. *Institution's experience in utilizing and sharing other major research equipment and its plans for making the requested equipment available to faculty in other institutions.* List a few of the major research instruments which are available on campus, particularly those which might be used by faculty and students involved on the applicable energy research projects. What was the approximate original cost of each? How has the institution ensured their continued operation and maintenance? Are they available to and to what exten have they been used by researchers from other educational institutions?

Describe the institution's plans for making the requested equipment available to researchers of other universities.

IV. Estimated Cost and Budget

A. Budget Information

A proposed budget should be submitted, detailing the estimated purchase cost of the equipment, as well as installation, operation, and maintenance costs *for a period of five years.* The anticipated sources of funds for each category should be indicated. Use the budget form provided in Appendix B and append any necessary explanations (e.g. the amount of monies contributed by non-Federal sources toward the purchase of the equipment).

B. Budget Page Comments

If the institution provides non-Federa funds for related costs, such as shippin installation, or operation and maintenance costs for the first five years, it may claim credit for them as "cost sharing."

C. Availability of Funds

The appropriation recommended for this program by Congress has been set at $4,000,000 and will be available in F 1984.

D. Cost Principles

The cost principles contained in OMB Circular A-21, "Cost Principles Applicable to Grants, Contracts and Other Agreements with Institutions of Higher Education," will apply to this program.

V. Method of Selection and Evaluation Criteria

A. Introduction

Applications will be screened first for their relevance to DOE research interests. Those found to be relevant will then be evaluated using the criteria listed in Section V.B. Technical evaluations will be obtained from government and non-government scientists and engineers familiar with the fields of research. Institutions are requested to specifically authorize external review, for evaluation purposes only, on the cover page of the application. If the application does not specifically authorize external review, and evaluation outside the Government is desired, *DOE may be unable to give the application full consideration.*

Final decisions will be made by DOE based upon the criteria indicated below, and a secondary consideration of other factors, such as possible duplication of similar equipment, research program balance, and related factors which may be important to achieving overall program purposes.

In the evaluation and handling of an application, every effort will be made to protect its confidentiality. DOE is under no obligation to pay for any costs associated with the preparation or submission of applications if an award is not made. DOE reserves the right to fund, in whole or in part, any, all, or none of the applications submitted in response to the solicitation. All principal investigators will be notified in writing of the acceptance or rejection of their applications. After the comprehensive evaluation has been completed, unsuccessful applications will be retained by DOE for a period of one year at the request of the institution. Principal investigators may request in writing copies of the evaluations of their application.

B. Evaluation Criteria

The criteria to be used in the review and evaluation of URI applications are as follows in declining order of importance. The value of the first criterion will be approximately equal to the total value of the remaining criteria. The subcriteria under each criterion are approximately equal in importance.

1. *Merit/Accomplishments.*

a. Technical merit and accomplishments of the institution's research programs in the selected energy area and any other factors which will demonstrate the institution's capability and commitment to energy research in this area; and

b. The potential for expanding/improving the program with the acquisition of the requested equipment.

2. *Faculty Qualifications/Experience.*

a. The qualifications of the faculty associated with the applicable research areas; and

b. The degree of faculty experience with similar equipment.

3. *Cost Sharing.*

a. Institution's plans for sharing the costs with non-Federal funds;

b. The reasonableness of proposed costs compared to anticipated benefits; and

c. The institution's financial plans for ensuring the operation and maintenance of the equipment.

4. *Research Equipment.*

a. Institution's experience in utilizing and sharing other major research equipment; and

b. Its plans for making the requested equipment available to faculty in other institutions.

VI. Submission of Applications

A. Address and Number of Copies

One signed original and nine copies of the application are to be submitted to: (Office to be designated).

B. Number of Proposals Per Institution

Each institution may submit a maximum of four applications. For this competition, the individual campuses of state systems are considered as separate institutions.

C. Closing Date for Receipt of Proposals

To be eligible, applications must be received by the Department of Energy by 5:00 p.m., *Month x, 1983* or postmarked by midnight, *Month x, 1983.*

D. Late Application Provisions

(The program announcement will include the standard DOE statement regarding the late submission of applications.)

VII. Other Information

A. Reports (Approved by OMB under control number 1901-0261)

A report which briefly describes the status and use of the equipment, new research projects which have been undertaken as a result of the equipment being available, financial data on operation and maintenance expenses provided by the institution, etc., will be required annually for two years following installation of the equipment. Five copies are to be submitted to: (To be designated).

B. Awards

As noted above, the Department anticipates making approximately 8 to 15 grants, each being over $100,000. It is unlikely that an institution will receive more than one award.

The awards will be announced on or before (April 15, 1984). Awards will be subject to the provisions of 10 CFR Part 600.

C. Catalog of Federal Domestic Assistance Number

The Catalog of Federal Domestic Assistance Number for this Program is 81.077.

D. Use and Operation of Research Instrumentation Provided Through the URI Program

It is contrary to DOE's intent for grantees to use research instrumentation or facilities provided by this program to provide services for a fee in direct competition with private companies that provide equivalent services. In general, DOE subscribes to the guidelines issued in the National Science Program Notice Number 91, March 11, 1983, and grantees are referred to that document for further guidance on the use of this equipment by off-campus researchers.

E. Information

For further information about this announcement or to obtain copies of the application, contact: (Contracting officer to be designated when announcement is released).

[FR Doc. 83-28337 Filed 10-17-83; 8:45 am]
BILLING CODE 6450-01-M

Federal Energy Regulatory Commission

[Docket No. ER83-763-000]

Cleveland Electric Illuminating Co.; Filing

October 12, 1983.

The filing Company submits the following:

Take notice that on September 23, 1983, Cleveland Electric Illuminating Company (CEI) tendered for filing an executed Service Agreement and Exhibits A and B thereto, providing for transmission by CEI of approximately 65 MW of power from the 345 kv interconnection point on CEI's Juniper-Canton Line with the Ohio Power Company to the City of Cleveland, Ohio

(City) in accordance with the terms and conditions of CEI's FERC Transmission Service Tariff.

CEI requests an effective date of September 1, 1983, and therefore requests waiver of the Commission's notice requirements.

Any person desiring to be heard or to protest said filing should file a motion to intervene or protest with the Federal Enegy Regulatory Commission, 825 North Capitol Street, N.E., Washington, D.C. 20426, in accordance with Rules 211 and 214 of the Commission's Rules of Practice and Procedure (18 CFR 385.211, 385.214). All such motions or protests should be filed on or before October 21, 1983. Protests will be considered by the Commission in determining the appropriate action to be taken, but will not serve to make protestants parties to the proceeding. Any person wishing to become a party must fle a motion to intervene. Copies of this filing are on file with the Commission and are available for public inspection.

Kenneth F. Plumb,

Secretary.

[FR Doc. 83-28321 Filed 10-17-83; 8:45 am]

BILLING CODE 6717-01-M

[Docket Nos. RP83-132-002 and TA84-1-44-000]

Commercial Pipeline Company, Inc.; Filing

October 12, 1983.

Take notice that on October 3, 1983, Commercial Pipeline Company, Inc. (Commercial) tendered for filing Second Amended Forty-third Revised Sheet No. 3A, superseding Forty-third Revised Sheet No. 3A, pursuant to an agreement reached between the Commission Staff and Commercial in connection with Commercial's rate filings (on September 1, 1983, and September 23, 1983) in the referenced proceedings. This tariff sheet, to be effective October 23, 1983, reflects a reduction from the base rates originally proposed of $.0324 per Mcf.

The reduction in Commercial's base rates results from an agreement between the Commission Staff and Commercial that the rate of return on equity and cash working capital allowance reflected in Commercial's original filings be adjusted. Accordingly, Commercial requests that the enclosed tariff sheet be permitted to go into effect October 23, 1983, without suspension. This is the same effective date proposed in Commercial's original filings.

Commercial requests that the Commission's Regulations be waived to the extent required to permit the tariff sheet tendered herewith to become effective as proposed.

A copy of the filing is being mailed to each of Commercial's jurisdictional customers and to the Kansas Corporation Commission and Missouri Public Service Commission.

Any person desiring to be heard or to protest said filing should file a petition to intervene or protest with the Federal Energy Regulatory Commission, 825 North Capitol Street, N.E., Washington, D.C. 20426, in accordance with Rules 211 and 214 of the Commission's Rules of Practice and Procedure (18 CFR 385.211, 385.214). All such petitions or protests should be filed on or before October 20, 1983. Protests will be considered by the Commission in determining the appropriate action to be taken, but will not serve to make protestants parties to the proceeding. Any person wishing to become a party must file a petition to intervene. Copies of this filing are on file with the Commission and are available for public inspection.

Kenneth F. Plumb,

Secretary.

[FR Doc. 83-28319 Filed 10-17-83; 8:45 am]

BILLING CODE 6717-01-M

[Docket No. RP83-138-000]

Distrigas of Massachusetts Corp.; Proposed Changes in FERC Gas Tariff

October 12, 1983.

Take notice that on September 30, 1983, Distrigas of Massachusetts Corporation (DOMAC) tendered for filing proposed changes in its FERC Gas Tariff, First Revised Volume No. 1. The proposed changes are based on the twelve month period ending June 30, 1983, as adjusted, and would increase jurisdictional terminalling service revenues by $3,618,146 per year. DOMAC also proposes to change in rate form from its straight commodity tiered rates to two part rates reflecting the Seaboard method of cost classification.

DOMAC states that the proposed increased rate is necessary to permit it to recover its cost of service for the test period of twelve months ended June 30, 1983, as adjusted. The cost of service reflects increases in the unit cost of terminalling services.

Copies of the filing were served upon the DOMAC's jurisdictional customers and interested state commissions.

Any person desiring to be heard or to protest said filing should file a petition to intervene or protest with the Federal Energy Regulatory Commission, 825 North Capitol Street, NE., Washington, D.C. 20426, in accordance with Rules 211 and 214 of the Commission's Rules of Practice and Procedure (18 CFR 385.211, 385.214). All such petitions or protests shoud be filed on or before October 21, 1983. Protests will be considered by the Commission in determining the appropriate action to be taken, but will not serve to make protestants parties to the proceeding. Any person wishing to become a party must file a petition to intervene. Copies of this filing are on file with the Commission and are available for public inspection.

Kenneth F. Plumb,

Secretary.

[FR Doc. 83-28320 Filed 10-17-83; 8:45 am]

BILLING CODE 6717-01-M

[Docket No. ER84-1-000]

Duke Power Co.; Filing

October 12, 1983.

The filing Company submits the following:

Take notice that Duke Power Company (Duke Power) tendered for filing on October 3, 1983 a supplement to the Company's Electric Power Contract with Rutherford Electric Membership Corporation. Duke Power states that this contract is on file with the Commission and has been designated Duke Power Company Rate Schedule FERC No. 139.

Duke Power further states that the Company's contract supplement, made at the request of the customer and with agreement obtained from the customer, provides for the following decreases in designated demand: Delivery Point No. 7 from 12,500 KW to 10,000 KW and Delivery Point No. 9 from 34,000 KW to 2,800 KW.

Duke Power indicates that this supplement also includes an estimate of sales and revenue for twelve months immediately preceding and for the twelve months immediately succeeding the effective date.

Duke Power requests an effective date of August 18, 1983, and therefore requests waiver of the Commission's notice requirements.

Copies of the filing have been mailed to Rutherford Electric Membership Corporation and the North Carolina Utilities Commission.

Any person desiring to be heard or to protest said filing should file a motion to intervene or protest with the Federal Energy Regulatory Commission, 825 North Capitol Street, NE., Washington, D.C. 20426, in accordance with Rules 211 and 214 of the Commission's Rules of Practice and Procedure (18 CFR 385.211, 385.214). All such motions or protests should be filed on or before October 24, 1983. Protests will be considered by the

Commission in determining the appropriate action to be taken, but will not serve to make protestants parties to the proceeding. Any person wishing to become a party must file a motion to intervene. Copies of this filing are on file with the Commission and are available for public inspection.

Kenneth F. Plumb,

Secretary.

[FR Doc. 83-28325 Filed 10-17-83; 8:45 am]

BILLING CODE 6717-01-M

[Docket No. ER83-769-000]

Duke Power Co.; Notice of Cancellation

October 12, 1983.

The filing Company submits the following:

Take notice that on September 27, 1983, Duke Power Company (Duke) tendered for filing a notice of cancellation of Duke's Electric Power Contract for Resale Service and Resale Schedule 11, between the North Carolina Electric Membership Corporation and the Saluda River Electric Cooperative, Inc.

Duke requests an effective date of October 31, 1983, and therefore requests waiver of the Commission's notice requirements.

Any person desiring to be heard or to protest said filing should file a motion to intervene or protest with the Federal Energy Regulatory Commission, 825 North Capitol Street NE., Washington, D.C. 20426, in accordance with Rules 211 and 214 of the Commission's Rules of Practice and Procedure (18 CFR 385.211, 385.214). All such motions or protests should be filed on or before October 24, 1983. Protests will be considered by the Commission in determining the appropriate action to be taken, but will not serve to make protestants parties to the proceeding. Any person wishing to become a party must file a motion to intervene. Copies of this filing are on file with the Commission and are available for public inspection.

Kenneth F. Plumb,

Secretary.

[FR Doc. 83-28326 Filed 10-17-83; 8:45 am]

BILLING CODE 6717-01-M

[Docket No. RP84-4-000]

Michigan Wisconsin Pipe Line Co.; Notice of Tariff Filing

October 12, 1983.

Take notice that on October 3, 1983, Michigan Wisconsin Pipe Line Company (Michigan Wisconsin) tendered for filing to the Federal Energy Regulatory Commission (Commission) Original Sheet Nos. 19d, 19e and 19f which comprise Rate Schedule AIC-1 to Original Volume No. 1 of Michigan Wisconsin's F.E.R.C. Gas Tariff. Rate Schedule AIC-1 has been filed in compliance with § 157.209(f) of the Commission's Regulations.

Rate Schedule AIC-1 sets forth the terms pursuant to which Michigan Wisconsin will provide end user transportation pursuant to Section 157.209 of the Commission's Regulations, under transportation agreements with end users which provide for rates which include an "Added Incentive Charge" as authorized by § 157.209(f) of the Commission's Regulations.

Michigan Wisconsin has requested that Rate Schedule AIC-1 be accepted for filing and become effective on August 5, 1983, pursuant to Commission Order Nos. 234-B and 319, pertaining to Docket Nos. RM81-19 and RM81-29, respectively, which became effective on August 5, 1983.

Any person desiring to be heard or to protest said filing should file a petition to intervene or protest with the Federal Energy Regulatory Commission, 825 North Capitol Street, NE., Washington, D.C. 20426, in accordance with Rule 211 or Rule 214 of the Commission's Rules of Practice and Procedure (18 CFR 385.211, 385.214). All such petitions or protests should be filed on or before October 21, 1983. Protests will be considered by the Commission in determining the appropriate action to be taken but will not serve to make protestants parties to the proceedings. Any party wishing to become a party to the proceeding must file a petition to intervene. Copies of this filing are on file with the Commission and are available for public inspection.

Kenneth F. Plumb,

Secretary.

[FR Doc. 83-28324 Filed 10-17-83; 8:45 am]

BILLING CODE 6717-01-M

[Docket No. ER83-767-000]

Pacific Power & Light Co.; Filing

October 12, 1983.

The filing Company submits the following:

Take notice that on September 26, 1983, Pacific Power & Light Company (PP&L) tendered for filing Supplement and Amendment No. 2, dated December 15, 1982 (1982 Agreement), to the Transmission Agreement dated February 25, 1976 between PP&L and Tri-State Generation and Transmission Association, Inc. (Tri-State).

Any person desiring to be heard or to protest said filing should file a motion to intervene or protest with the Federal Energy Regulatory Commission, 825 North Capitol Street, N.E., Washington, D.C. 20426, in accordance with Rules 211 and 214 of the Commission's Rules of Practice and Procedure (18 CFR 385.211, 385.214). All such motions or protests should be filed on or before October 21, 1983. Protests will be considered by the Commission in determining the appropriate action to be taken, but will not serve to make protestants parties to the proceeding. Any person wishing to become a party must file a motion to intervene. Copies of this filing are on file with the Commission and are available for public inspection.

Kenneth F. Plumb,

Secretary.

[FR Doc. 83-28322 Filed 10-17-83; 8:45 am]

BILLING CODE 6717-01-M

[Docket Nos. CP83-279-002, CP83-340-003 and CP83-428-001]

Producer-Suppliers of Transcontinental Gas Pipe Line Corp. et al.; Petitions To Amend

October 13, 1983.

Take notice that on October 11, 1983, Transcontinental Gas Pipe Line Corporation (Transco), P. O. Box 1396, Houston, Texas 77251, filed in Docket No. CP-279-002, Transco Gas Supply Company (Gasco), P.O. Box 1396, Houston, Texas 77251, filed in Docket No. CP83-340-003, and Gasco and Transco filed in Docket No. CP83-428-001 petitions to amend the orders issued May 13, 1983, June 27, 1983, and September 12, 1983, respectively, in Docket Nos. CP83-279-000, CP83-340-000, and CP83-428-000, respectively, pursuant to Section 7 of the Natural Gas Act so as to extend the term of the authorizations until March 31, 1984, all as more fully set forth in the petitions to amend which are on file with the Commission and open to public inspection.

Petitioners state that the May 13, 1983, and the June 27, 1983, orders authorized the partial abandonment by Transco's and Gasco's producer-suppliers of sales to Transco or Gasco respectively, through October 31, 1983, of those volumes which the producer sells directly to Transco's customers under its Industrial Sales Preogram (ISP). It is further stated that the September 12, 1983, order authorized the partial abandonment by Petitioner's producer-suppliers of sales to Petitioners which are subject to Sections 102(d) and 107 of the Natural Gas Policy Act of 1978, through October 31, 1983 of those

volumes which the producer sells directly to Transco's customers under its Contract Carriage Program (CCP). It is also stated that the orders authorized limited-term sales by the producers directly to Transco's customers through October 31, 1983. In addition, Petitioners assert that the Commission has waived the producer filing requirements applicable to abandonment of service (18 CFR 157.30) and commencement of new sales for resale in interstate commerce (18 CFR 157.24, 157.25).

Petitioners request the extension of the authorizations issued in Docket Nos. CP83-279-000, CP83-340-000, and CP83-428-000 until March 31, 1984. It is indicated that these requests are in conjunction with an Amendment to Settlement Agreement as to Rates of Transco in Docket No. RP83-11-000, which among other things extended the term of the ISP and the CCP until March 31, 1984. It is claimed that the requested authorization is necessary to effectuate the terms of the settlement and to permit Transco's customers to continue to purchase the volumes of gas without interruption.

Any person desiring to be heard or to make any protest with reference to said petitions to amend should on or before October 21, 1983, file with the Federal Energy Regulatory Commission, Washington, D.C. 20426, a motion to intervene or a protest in accordance with the requirements of the Commission's Rules of Practice and Procedure (18 CFR 385.214 or 385.211) and the Regulations under the Natural Gas Act (18 CFR 157.10). All protests filed with the Commission will be considered by it in determining the appropriate action to be taken but will not serve to make the protestants parties to the proceeding. Any person wishing to become a party to a proceeding or to participate as a party in any hearing therein must file a motion to intervene in accordance with the Commission's Rules.

Kenneth F. Plumb,

Secretary.

[FR Doc. 83-28327 Filed 10-17-83; 8:45 am]

BILLING CODE 6717-01-M

[Docket No. RP84-3-000]

Tennessee Gas Pipeline Co., a Division of Tenneco Inc.; Notice of Tariff Filing

October 12, 1983.

Take notice that on October 4, 1983, Tennessee Gas Pipeline Company, a Division of Tenneco Inc. (Tennessee), tendered for filing the following tariff sheets to Original Volume No. 1 of its FERC Gas Tariff to be effective on October 4, 1983: Second Revised Sheet Nos. 87 and 88; First Revised Sheet Nos. 89 and 90; A Sheet Reserving Original Sheet Nos. 91 through 186 for Future Use.

Tennessee states that the sole purpose of Second Revised Tariff Sheet Nos. 87 and 88 is to revise its Rate Schedule IT such that is it now applicable to all non-end user transportation services pursuant to the existing regulations and § 157.209(b)(3) of the Commission's Regulations.

Tennessee further states that the purpose of First Revised Tariff Sheet Nos. 89 and 90 is to implement its Rate Schedule ITEU, applicable to all transportation service for end users pursuant to Sections 157.209(a), (b)(1), and (b)(2) of the Commission's pre-existing regulations.

Tennessee states that copies of the filing have been mailed to all of its customers and affected state regulatory commissions.

Any person desiring to be heard or to protest said filing should file a petition to intervene or protest with the Federal Energy Regulatory Commission, 825 North Capitol Street, NE., Washington, D.C. 20426, in accordance with Rules 211 and 214 of the Commission's Rules of Practice and Procedure (18 CFR 385.211 and 385.214). All such petitions or protests should be filed on or before October 21, 1983. Protests will be considered by the Commission in determining the appropriate action to be taken, but will not serve to make protestants parties to the proceeding. Any person wishing to become a party must file a petition to intervene. Copies of this filing are on file with the Commission and are available for public inspection.

Kenneth F. Plumb,

Secretary.

[FR Doc. 83-28323 Filed 10-17-83; 8:45 am]

BILLING CODE 6717-01-M

Oil Pipeline Tentative Valuation; Chase Transportation Co., Inc.,

October 13, 1983.

The Federal Energy Regulatory Commission by order issued February 10, 1978, established an Oil Pipeline Board and delegated to the Board its functions with respect to the issuance of valuation reports pursuant to Section 19a of the Interstate Commerce Act.

Notice is hereby given that a tentative valuation is under consideration for the common carrier by pipeline listed below:

1978 Annual Report

Valuation Docket No. PV—1452-000. Chase Transportation Company, Inc., P.O. Box 2256, Wichita, Kansas 67217

On or before November 21, 1983, persons other than those specifically designated in Section 19a(h) of the Interstate Commerce Act having an interest in this valuation may file, pursuant to rule 214 of the Federal Energy Regulatory Commission's "Rules of Practice and Procedure" (18 CFR 385.214), an original and three copies of a petition for leave to intervene in this proceeding.

If the petition for leave to intervene is granted the party may thus come within the category of "additional parties as the FERC may prescribe" under Section 19a(h) of the Act, thereby enabling it to file a protest. The petition to intervene must be served on the individual company at its address shown above and an appropriate certificate of service be attached to the petition. Persons specifically designated in Section 19a(h) of the Act need not file a petition; they are entitled to file a protest as a matter of right under the statute.

Francis J. Connor,

Administrative Officer, Oil Pipeline Board.

[FR Doc. 83-28328 Filed 10-17-83; 8:45 am]

BILLING CODE 6717-01-M

ENVIRONMENTAL PROTECTION AGENCY

[AD-FRL 2452-6]

Issuance of PSD Permit to Kaiser Aluminum and Chemical Corporation

Notice is hereby given that on September 30, 1983, the Environmental Protection Agency (EPA) issued a Prevention of Significant Deterioration (PSD) permit to Kaiser Aluminum and Chemical Corporation at Tacoma, Washington.

This permit has been issued under EPA's Prevention of Significant Air Quality Deterioration (40 CFR 52.21) regulation, subject to certain conditions specified in the permit.

Copies of the permit are available for public inspection upon request at the following location: Environmental Protection Agency, Region 10, 1200 Sixth Avenue, Room 11D, M/S 532, Seattle Washington 98101.

Dated: September 30, 1983.

Ernesta B. Barnes,

Regional Administrator.

[FR Doc. 83-28288 Filed 10-17-83; 8:45 am]

BILLING CODE 6550-50-M

Approval and Promulgation of State Implementation Plans; Delegation to the State of Washington

AGENCY: Environmental Protection Agency (EPA).

ACTION: Notice.

SUMMARY: EPA is announcing approval of a request dated September 6, 1983 submitted from the State of Washington Department of Ecology for delegation of the Prevention of Significant Deterioration Program.

DATE: Effective date October 1, 1983.

ADDRESSES: The related material in support of this delegation may be examined during normal business hours at the following locations:

Central Docket Section (10A-83-16), Environmental Protection Agency, West Tower Lobby, Gallery I, 401 M Street, SW., Washington, D.C. 20460

Air Programs Branch, Environmental Protection Agency, Region 10, 1200 Sixth Avenue, Seattle, Washington 98101

State of Washington, Department of Ecology, 4224 Sixth Avenue, SE., Rowe Six, Building #4, Lacey, Washington 98504

FOR FURTHER INFORMATION CONTACT: David Bray, Air Programs Branch M/S 532, Environmental Protection Agency, Region 10, 1200 Sixth avenue, Seattle, Washington 98101, Telephone: (206) 442-1980, FTS: 399-1980.

SUPPLEMENTARY INFORMATION: At the State-sponsored public hearing held on August 25, 1983, the State of Washington Department of Ecology (WDOE) adopted by reference certain provisions of 40 CFR 52.21 (Prevention of Significant Deterioration (PSD) program). In a letter dated September 6, 1983, WDOE requested EPA to delegate the PSD program to the State pursuant to 40 CFR 51.21(u). After EPA review of the request, a letter dated September 30, 1983 was sent to WDOE approving this delegation which encompass all sources except those on Indian lands or under the jurisdiction of the Energy Facility Site Evaluation Council. That letter is as follows:

Donald M. Moos,
Director, State of Washington, Department of Ecology, PV-11
Olympia, Washington 98504

Dear Mr. Moos: We greatly appreciate the opportunity to have worked with your staff regarding the State implementation of the Prevention of Significant Deterioration (PSD) requirements and the other changes to your SIP mentioned in your September 6, 1983 letter. We are currently proceeding with approval of the WDOE program changes as a SIP revision. In the interim period before SIP approval, I hereby delegate authority to WDOE for administration of the Federal PSD program. All State permits issued under your PSD provisions are thereby recognized as Federally enforceable and no EPA-issued permit is needed. Furthermore, the delegation of authority to enforce the provisions of the PSD permits which were issued by EPA is granted. It should be noted that the delegation does not cover the issuance of PSD permits on Indian lands or the licensing of major energy facilities through EFSEC. Be assured that my office stands ready to assist you and your department in whatever manner possible.

A Notice announcing this delegation will be published in the **Federal Register** in the near future. The Notice will state that effective October 1, 1983, all permit applications pursuant to the PSD requirements from sources located in the State which were previously sent to EPA will now be sent to WDOE.

Since the delegation is effective October 1, 1983, there is no requirement that WDOE notify EPA of its acceptance. Unless EPA receives from WDOE written notice of objections within 10 days of the date of receipt of this letter, WDOE will be deemed to have accepted all the terms of the delegation.

An advance copy of this register is enclosed for your information.

Sincerely,

Ernesta B. Barnes,
Regional Administrator.

Enclosure
cc: C. Kleeberg, WOO

This Notice is published to notify the public that a delegation has taken place. (Section 110, Clean Air Act, 42 U.S.C. 7410(a) and 7502)

Dated: October 12, 1983.

Ernesta B. Barnes,
Regional Administrator.

[FR Doc. 83-28289 Filed 10-17-83; 8:45 am]
BILLING CODE 6560-50-M

FEDERAL COMMUNICATIONS COMMISSION

Availability of FCC Rules Volumes

October 4, 1983.

The loose-leaf volumes of FCC Rules listed on the attachment are now available from the Government Printing Office (GPO). The listing provides the price and stock number of, and the rule parts included in, each volume. Inconjunction with the listing, an order form is provided for your use.

This is set of rules volumes, revised as of September 30, 1982, is the first to be produced using an automated system. The Commission anticipates issuing a complete set of rules each year or whenever the need arises. Because of this tentative production schedule, transmittal sheets will no longer be prepared unless ablolutely necessary. Therefore, each volume will be available as a separate publication but not on a subscription basis.

Rules in these volumes are indentical to the corresponding portions of Title 47 of the Code of Federal Regulations. It is not necessary to purchase both. In addition, it is possible that an update set of rules will be printed early in 1984, depending on the success of further refinements to the automated process.

The remaining parts of the rules will be available from the GPO in pamphlet form on or about October 13, 1983.

Questions and comments may be directed to Callie Holder at 1919 M St., NW, Room 224, Washington, D.C. 20554, or by phone at (202) 632-4178.

William J. Tricarico,
Secretary, Federal Communications Commission.

Federal Communications Commission.

Loose-Leaf Rules

Volume I: Part 0—Commission Organization; Part 1—Practice and Procedure; Part 19—Employee Responsibilities and Conduct.

S/N OO4-000-00409-4: $5.50

Volume II: Part 2—Frequency Allocations and Radio Treaty Matters, General Rules and Regulations; Part 5—Experimental Radio Services (Other Than Broadcast); Part 15—Radio Frequency Devices; Part 18—Industrial, Scientific and Medical Equipment.

S/N OO4-000-00410-8: $5.50

Volume III: Part 73—Radio Broadcast Services; Part 74—Experimental, Auxiliary, Special Broadcast and Other Program Distributional Services.

S/N OO4-000-00411-6: $6.50

Volume IV: Part 81—Stations on Land in the Maritime Services; Part 83—Services on Shipboard in the Maritime Services; Part 87—Avaition Services (Formerly in Volume V).

S/N OO4-000-00408-6: $6.00

Volume V: Part 90—Private Land Mobile Radio Services; Part 94—Private Operational-Fixed Microwave Service.

S/N OO4-000-00412-4: $5.50

Volume VII: Part 21—Domestic Public Fixed Radio Services; Part 22—Public Mobile Radio Services; Part 23—International Fixed Public Radicommunications; Part 25—Satellite Communications.

S/N OO4-000-00401-9: $7.50

Volume VIII: Part 31—Uniform System of Accounts for Class A and Class B Telephone Companies; Part 33—Uniform System of accounts for Class C Telephone Companies; Part 34—Uniform System of accounts for Radiotelegraph Carriers (Foremerly in Volume IX); Part 35—Uniform System of accounts for Wire-Telegraph and Ocean-Cable Carriers (Formerly in Volume IX).

S/N OO4-000-00413-2: $7.50

To order, please indicate the quantity desire in the spaces provided above. Complete the order form and submit, along with proper remittence, to the Superintendent of Documents.

Order Form Mail To: Superintendent of Documents, U.S. Government Printing Office, Washington, D.C. 20402

Enclosed is $ _____ ☐ check, ☐ money order, or charge to my Deposit Account No.

☐☐☐☐☐☐☐-☐

Order No. _____

MasterCard and VISA accepted.

Credit Card Orders Only
Total charges $_____
Fill in the boxes below.
Credit Card No.
Expiration Date Month/Year

Customer's Telephone No.'s
Area Code Home Area Code Office

Charge orders may be telephoned to the GPO order desk at (202)783-3238 from 8:00 a.m. to 4:00 p.m. eastern time, Monday-Friday (except holidays).

Please send me the publications I have indicated.

Company or Personal Name
Additional address/attention line
Street address
City State ZIP Code
(or Country)

PLEASE PRINT OR TYPE

For Office Use Only

Quantity		Charges
_____	Publications	_____
_____	Subscriptions	_____
	Special Shipping Charges	_____
	International Handling	_____
	Special Charges	_____
	OPNR	_____
_____	UPNS	
_____	Balance Due	
_____	Discount	
_____	Refund	

982

GPO 896-910

[FR Doc.83-27750 Filed 10-17-83; 10:54 am]
BILLING CODE 6712-01-M

[MM Docket Nos. 83-1034 and 1035; File Nos. BP-811030BG and BP 810526AA]

KGY, Inc. and ABT, Inc.; Hearing Designation Order

In re applications of KGY, Inc., KGY(AM), Tumwater, Washington, Has: 1240 kHz, 250W, 1 kW-LS, U, Req: 1030 kHz, 500W, 10 kW-LS, U (MM Docket No. 83-1034, File No. BP-811030BG) and ABT, Inc., KMAS(AM), Shelton, Washington, Has: 1280 kHz, 5kW, DA-D, Req: 1030 kHz, 1 kW, 5 kW-LS, U (MM Docket No. 83-1035, File No. BP-810526AA) For construction permit.

Adopted: September 26, 1983.

Released: October 7, 1983.

By the Chief, Mass Media Bureau.

1. The Commission, by the Chief, Mass Media Bureau, acting pursuant to delegated authority, has under consideration the above-captioned mutually exclusive applications filed by KGY, Inc. (KGY), and ABT, Inc. (ABT).

2. *KGY.* National Public Radio (NPR) filed an informal objection to a grant of the KGY application, stating that KGY's primary coverage area would remain in the metropolitan Olympia area although KGY has proposed to change its community of license to Tumwater, Washington. NPR alleged that the Tumwater location was selected solely for the purpose of meeting the gateway criteria of Section 73.37(e)(2)(ii) of the Commission's Rules, thereby circumventing the real intent of the Commission in its clear channel decision. The Mass Media Bureau, pursuant to delegated authority, denied the informal objection by letter, citing the Commission's abolition of the suburban community policy in its *Report and Order,* 53 RR 2d 681 (1983). Although the Commission noted that this policy, which attempted to ascertain an applicant's intent with respect to the community to be served, no longer served the public interest, we noted the necessity of an applicant's compliance with the rules requiring the provision of the requisite signal to the community of license. *Report and Order, supra,* at 697. Consequently, we are unable to determine from an examination of the contour map submitted by KGY whether the nightime 25 mV/m contour would cover the business district of Tumwater, and whether the 19.2 mV/m night interference-free contour encompasses the entire residential area of Tumwater. An appropriate issue will be specified.

3. In addition to determining, pursuant to Section 307(b) of the Communications Act of 1934, as amended, which of the proposals would better provide a fair, efficient, and equitable distribution of radio service, a contingent comparative issue will also be specified.

4. Except as indicated by the issues specified below, the applicants are qualified to construct and operate as proposed. However, since the proposals are mutually exclusive, they must be designated for hearing in a consolidated proceeding on the issues specified below.

5. Accordingly, it is ordered, That, pursuant to Section 309(e) of the Communications Act of 1934, as amended, the applications are designated for hearing in a consolidated proceeding, at a time and place to be specified in a subsequent Order, upon the following issues:

1. (a) To determine whether the nightime 25 mV/m contour submitted by KGY covers the business district of Tumwater, and whether the nighttime 19.2 mV/m nighttime interference-free

contour encompasses the entire residential area of Tumwater; and

(b) whether, in light of the evidence adduced pursuant to (a) above, the applicant is qualified to construct and operate as proposed.

2. To determine, in the light of Section 307(b) of the Communications Act of 1934, as amended, which of the proposals would better provide a fair, efficient, and equitable distribution of radio service.

3. To determine, in the event it is concluded that a choice between the applications should not be based solely on considerations relating to Section 307(b), which of the proposals would, on a comparative basis, better serve the public interest.

4. To determine, in the light of the evidence adduced pursuant to the foregoing issues, which of the applications should be granted.

6. It is further ordered, That, within 30 days of the release of this Order, KGY shall submit a new contour map of its nighttime 25 mV/m business district coverage and 19.2 mV/m nighttime interference-free coverage of the residential area of Tumwater; the map shall contain a specific delineation of the main business district of Tumwater and the boundaries of the community sufficient to determine whether the proposed coverage would be sufficient.

7. It is further ordered, That to avail themselves of the opportunity to be heard, the applicants herein shall, pursuant to § 1.221(c) of the Commission's Rules, in person or by attorney, within 20 days of the mailing of this Order, file with the Commission in triplicate a written appearance stating an intention to appear on the date fixed for the hearing and to present evidence on the issues specified in this Order.

8. It is further ordered, That the applicants herein shall, pursuant to Section 311(a)(2) of the Communications Act of 1934, as amended, and § 73.3594 of the Commission's Rules, give notice of the hearing within the time and in the manner prescribed in such Rule, and shall advise the Commission of the publication of such notice as required by § 73.3594(g) of the rules.

Federal Communications Commission.

W. Jan Gay,

Assistant Chief, Audio Services Division, Mass Media Bureau.

[FR Doc. 83-28318 Filed 10-17-83; 8:45 am]

BILLING CODE 6712-01-M

FEDERAL RESERVE SYSTEM

Acquisition of Bank Shares by a Bank Holding Company; First Oak Brook Bancshares, Inc.

The company listed in this notice has applied for the Board's approval under section 3(a)(3) of the Bank Holding Company Act (12 U.S.C. 1842(a)(3)) to acquire voting shares or assets of a bank. The factors that are considered in acting on the application are set forth in section 3(c) of the Act (12 U.S.C. 1842(c)).

The application may be inspected at the offices of the Board of Governors, or at the Federal Reserve Bank indicated. With respect to the application, interested persons may express their views in writing to the address indicated. Any comment on the application that requests a hearing must include a statement of why a written presentation would not suffice in lieu of a hearing, identifying specifically any questions of fact that are in dispute and summarizing the evidence that would be presented at a hearing.

A. **Federal Reserve Bank of Chicago** (Franklin D. Dreyer, Vice President), 230 South LaSalle Street, Chicago, Illinois 60690:

1. *First Oak Brook Bancshares, Inc.*, Oak Brook, Illinois; to acquire 95.2 percent or more of the voting shares or assets of Warrenville Bank and Trust Co., Warrenville, Illinois. Comments on this application must be received not later than November 8, 1983.

Board of Governors of the Federal Reserve System, October 12, 1983.

James McAfee,

Associate Secretary of the Board.

[FR Doc. 83-28267 Filed 10-17-83; 8:45 am]

BILLING CODE 6210-01-M

Formation of a Bank Holding Company; Kansas Bank System, Inc.

The company listed in this notice has applied for the Board's approval under section 3(a)(1) of the Bank Holding Company Act (12 U.S.C. 1842(a)(1)) to become a bank holding company by acquiring voting shares or assets of a bank. The factors that are considered in acting on the application are set forth in section 3(c) of the Act (12 U.S.C. 1842(c)).

The application may be inspected at the offices of the Board of Governors, or at the Federal Reserve Bank indicated. With respect to the application, interested persons may express their views in writing to the address indicated. Any comment on the application that requests a hearing must include a statement of why a written presentation would not suffice in lieu of a hearing, identifying specifically any questions of fact that are in dispute and summarizing the evidence that would be presented at a hearing.

A. **Federal Reserve Bank of Kansas City** (Thomas M. Hoenig, Vice President), 925 Grand Avenue, Kansas City, Missouri 64198:

1. *Kansas Bank System, Inc.*, Topeka, Kansas; to become a bank holding company by acquiring 97 percent of the voting shares of Kansas State Bank of Manhattan, Manhattan, Kansas. Comments on this application must be received not later than November 10, 1983.

Board of Governors of the Federal Reserve System, October 12, 1983.

James McAfee,

Associate Secretary of the Board.

[FR Doc. 83-28268 Filed 10-17-83; 8:45 am]

BILLING CODE 6210-01-M

Bank Holding Companies; Proposed de Novo Nonbank Activities; Barclays Bank PLC et al.

The organizations identified in this notice have applied, pursuant to section 4(c)(8) of the Bank Holding Company Act (12 U.S.C. 1843(c)(8)) and § 225.4(b)(1) of the Board's Regulation Y (12 CFR 225.4(b)(1)), for permission to engage *de novo* (or continue to engage in an activity earlier earlier commenced *de novo*), directly or indirectly, solely in the activities indicated, which have been determined by the Board of Governors to be closely related to banking.

With respect to these applications, interested persons may express their views on the question whether consummation of the proposal can "reasonably be expected to produce benefits to the public, such as greater convenience, increased competition, or gains in efficiency, that outweight possible adverse effects, such as undue concentration of resources, decreased or unfair competition, conflicts of interests, or unsound banking practices." Any comment that requests a hearing must include a statement of the reasons a written presentation would not suffice in lieu of a hearing, identifying specifically any questions of fact that are in dispute, summarizing the evidence that would be presented at a hearing, and indicating how the party commenting would be aggrieved by approved of that proposal.

The applications may be inspected at the offices of the Board of Governors or at the Federal Reserve Bank indicated. Comments and requests for hearing

should identify clearly the specific application to which they relate, and should be submitted in writting and received by the appropriate Federal Reserve Bank not later than the date indicated.

A. **Federal Reserve Bank of New York** (A. Marshall Puckett, Vice President), 33 Liberty Street, New York, New York 10045:

1. *Barclays Bank PLC* and *Barclays Bank International Limited,* London, England (consumer finance and insurance activities; South Carolina): To engage through their subsidiary, BarclaysAmerican/Financial, Inc. ("BAF"), in making direct consumer loans, including loans secured by real estate, and purchasing sales finance contracts representing extensions of credit such as would be made or acquired by a consumer finance company, and wholesale financing (floor planning) and acting as agent for the sale of related credit life, credit accident and health and credit property insurance, such insurance activities being permissible pursuant to sections 601 (A) and (D) of the Garn-St Germain Depository Instititions Act of 1982. Credit life and credit accident and health insurance sold as agent may be underwritten or reinsured by the insurance underwriting subsidiaries of Barclays-American-Corporation. These activities would be conducted from a relocated office of BAF in Charleston, South Carolina, serving Charleston and surrounding areas in South Carolina. comments on this application must be received not later than November 8, 1983.

B. **Federal Reserve Bank of Chicago** (Franklin D. Dreyer, Vice President), 230 South LaSalle Street, Chicago, Illinois 60690:

1. *Citizens Bancorporation,* Sheboygan, Wisconsin (management consulting and data processing activities; Indiana, Michigan, Illinois, Iowa, Minnesota, North Dakota, South Dakota): To engage through its subsidiary, Citizens Management Services Corporation in providing management consulting advice to nonaffiliated banks and nonbank depository institutions; and providing data processing and data transmission services, data bases or facilities for the internal operations of the holding company or its subsidiaries, and for others. These activities previously have been authorized to be conducted in Wisconsin and the upper peninsula of Michigan from an office to be located in Milwaukee, Wisconsin. Applicant proposes to expand the geographic area in which the activities would be conducted by adding the states of Indiana, Michigan, Illinois, Iowa, Minnesota, North Dakota and South Dakota. Comments on this application must be received not later than November 2, 1983.

C. **Federal Reserve Bank of Dallas** (Anthony J. Montelaro, Vice President), 400 South Akard Street, Dallas, Texas 75222:

1. *Coronado Bancshares, Inc.,* El Paso, Texas (financing activities; Texas, New Mexico): To engage directly in consumer and commercial lending activities, including the extension of direct loans to commercial businesses; direct loans to individuals; the purchase of retail and commercial installment notes or contracts receivable and any other extension of credit which would be made by a commercial lender, and including servicing such loans for others. These activities would be performed from an office in El Paso, Texas, serving El Paso, Hudspeth and Culberson Counties in Texas, and Dona Ana County in New Mexico. Comments on this application must be received not later than November 4, 1983.

Board of Governors of the Federal Reserve System, October 12, 1983.

James McAfee,

Associate Secretary of the Board.

[FR Doc. 83-28269 Filed 10-17-83; 8:45 am]

BILLING CODE 6210-01-M

[Docket No. R-0482]

Fee Schedules for Federal Reserve Bank Services

AGENCY: Board of Governors of the Federal Reserve System.

ACTION: Proposed fee schedule: Extension of comment period.

SUMMARY: The Board of Governors of the Federal Reserve System has extended the period for receipt of public comments on its proposed fee schedule and service enhancements for automated clearinghouse ("ACH") services. The comment period is extended through December 2, 1983.

DATE: Comments must be received by December 2, 1983.

ADDRESS: Comments, which should refer to Docket No. R-0482, may be mailed to William W. Wiles, Secretary, Board of Governors of the Federal Reserve System, 20th Street and Constitution Avenue, NW., Washington, D.C. 20551, or delivered to room B-2223 between 8:45 a.m. and 5:15 p.m. Comments received may be inspected at room B-1122 between 8:45 a.m. and 5:15 p.m., except as provided in § 261.6(a) of the Board's Rules Regarding the Availability of Information, 12 CFR 261.6(a).

FOR FURTHER INFORMATION CONTACT: Elliott C. McEntee, Associate Director (202/452-2231 or Florence M. Young, Progam Manager (202/452-3955), Division of Federal Reserve Bank Operations; Gilbert T. Schwartz, Associate General Counsel (202/452-3625) or Elaine M. Boutilier, Attorney (202/452-2418), Legal Division, Board of Governors of the Federal Reserve System, Washington, D.C. 20551.

SUPPLEMENTARY INFORMATION: On September 23, 1983 (48 FR 44650, September 29, 1983), the Board of Governors proposed a revised fee schedule, float reduction plan and service enhancements for the ACH service. The proposed fee schedule represented a restructuring of ACH fees. In addition, several new enhancements to the ACH service were proposed. Proposed methods for reducing and pricing ACH float were also included in the request for comment.

Comment was requested on the proposal by November 7, 1983. Requests have been received for additional time in which to submit comments. In view of the issues involved in the proposal and in order to provide interested parties with additional time in which to present their views, the comment period has been extended through December 2, 1983.

By order of the Board of Governors, acting through its Secretary under delegated authority, October 12, 1983.

William W. Wiles,

Secretary of the Board.

[FR Doc. 83-28271 Filed 10-17-83; 8:45 am]

BILLING CODE 6210-01-M

[Docket No. R-0485]

Private Sector Adjustment Factor

AGENCY: Board of Governors of the Federal Reserve System.

ACTION: Request for comments.

SUMMARY: The Board of Governors is requesting public comment on the methodology for calculating the Private Sector Adjustment Factor ("PSAF") for 1984.

DATE: Comments must be received by November 30, 1983.

ADDRESS: Comments, which should refer to Docket No. R-0485, may be mailed to Mr. William W. Wiles, Secretary, Board of Governors of the Federal Reserve System, 20th Street and Constitution Avenue, NW., Washington, D.C. 20551, or delivered to Room B-2223 between 8:45 a.m. and 5:15 p.m. Comments received may be inspected at Room B-1122 between 8:45 a.m. and 5:15 p.m.,

except as provided in § 261.6(a) of the Board's Rules Regarding the Availability of Information, 12 CFR 261.6(a).

FOR FURTHER INFORMATION CONTACT: Earl Hamilton, Assistant Director (202/452-3874), Division of Federal Reserve Bank Operations; Gilbert T. Schwartz, Associate General Counsel (202/452-3625) or Robert G. Ballen (202/452-3265), Attorney, Legal Division, Board of Governors of the Federal Reserve System, Washington, D.C. 20551.

SUPPLEMENTARY INFORMATION: The Monetary Control Act of 1980 (Pub. L. 96-221) provides that over the long run, fees for the Federal Reserve's priced services are to be based upon costs, including the "taxes that would have been paid and the return on capital that would have been provided had the services been furnished by a private business firm." Accordingly, the PSAF should be thought of as a financial or accounting yardstick that facilitates the imputation of capital costs and taxes to the Federal Reserve. Over time, however, the pricing process more generally should seek to ensure that economic resources are allocated and payments services are provided in the most efficient ways possible.

The Board has examined the issues relating to the current methodology that has been used in calculating the PSAF and requests comment on the following:

a. *Choice of Model.* Since Federal Reserve Banks are unique organizations, it is not possible to find totally comparable private sector firms to use as a model for imputing the cost of capital and taxes. In view of the unique nature of the Federal Reserve, the PSAF could be calculated by abandoning reference to the actual experience of any private sector firm, and judgments could be made regarding the Federal Reserve's cost of capital and taxes had it been a private firm. However, in view of the fact that there would be no basis upon which to determine the appropriateness of any judgments made among the infinite number of costs of capital and tax possibilities, the Board proposes that those entities most closely comparable to the Federal Reserve with regard to its priced services continue to be used as a model for purposes of calculating the PSAF.

In reaching this decision four alternative types of entities were analyzed: Public utilities, government-sponsored organizations such as the Federal National Mortgage Association, nonbank data processing companies, and bank holding companies. Bank holding companies are currently used as the model for the PSAF.

The Board rejected public utilities as a model because services provided by these entities generally do not resemble those of the Federal Reserve. Moreover, their capital costs and structure are such as to result in a PSAF that probably would be lower than that derived from a bank holding company model.

Government-sponsored entities also were determined not to be appropriate as a model because their services generally are not comparable to those of the Federal Reserve. The services provided by government-sponsored entities predominantly relate to extensions of credit, rather than to payments-related services of the Federal Reserve. In addition, the cost of capital of government-sponsored entities, in part because of their government sponsorship, would result in a lower cost of capital for the PSAF calculation than using the bank holding company model.

While use of nonbank data processing companies as a model was considered and previously rejected, a more comprehensive review of the data processing company model was undertaken in view of the suggestion that such companies provide the appropriate model for the PSAF. The Board continues to believe that the data processing companies do not provide the appropriate model given the dissimilarity between their services and those of the Federal Reserve. Although both the Federal Reserve and data processing companies use computers, a detailed analysis of the services of six data processing companies that others have suggested be used as a model for the PSAF indicated that their service offerings are significantly different from the priced services activities of the Reserve Banks and that they are not the appropriate model.

First, the prospects of these data processors are tied to developments in activities far removed from those of the Federal Reserve. Second, the different services provided by the Federal Reserve and these data processors necessitated different inputs into the production process. For example, the data processors specified do not collect checks like the Federal Reserve and other depository institutions. Third, to the limited extent to which the activities of the data processors are at all comparable to those of the Federal Reserve, the data processors generally only perform a portion only one step in the payments process—the recording and transfer of payments information. The Federal Reserve, in contrast, performs many, and in some cases all, of the steps that take place as payments are made. Finally, none of these six data processing companies that others have suggested be used as a model included the Federal Reserve as a competitor in its discussion of competitors in its 1982 Form 10-K filings with the Securities and Exchange Commission. Further, only one of the six has commented on a single occasion on the Federal Reserve's pricing proposals, and that comment was limited to a narrow point.

It has been suggested that since large bank holding companies engage in a number of activities other than correspondent banking, their capital costs do not provide an appropriate model for the Federal Reserve. Clearly, large banking organizations engage in a wide range of activities—many of which are related to the activities of correspondent divisions. The fact that the correspondent banking division does not raise capital on its own and interacts with the totality of the banking organization generally reinforces the logic of using the bank holding company model.

Thus, taking into account the services offered, and the obvious fact that large banking organizations are the competitors of the Federal Reserve, the Board proposes that large bank holding companies continue to be the appropriate model upon which to construct the PSAF.

The Board is also considering the risk that might be associated with the correspondent operations of the banking organization on a stand-alone basis and, in turn, what that might imply for the discount or premium of the market price of its stock relative to book value. Unfortunately, there is virtually no reasonable basis for determining whether, in fact, correspondent services would be perceived as more or less risky by the market than other banking operations—in part because the correspondent services are tied together with the entire bank. Moreover, even if that determination could be made, there is no way to anticipate how the market would respond.

The Board also considered the issue of the selection of the specific bank holding companies to be included within the PSAF model. Currently, the model is comprised of the 12 largest bank holding companies in the United States. These institutions were chosen primarily because of their size and their importance in the correspondent banking business. It has been suggested that this sample is inappropriate because it is, in general, too small and because the market value of the stock of these companies may be materially below book value, which in turn lowers

the cost of equity capital in the PSAF calculation.

The Board believes that the suggestion to expand the size of the sample has merit. Such an expansion would reduce the potential that overall results will be biased by individual institutions, and provide greater geographic representation. Accordingly, the Board proposes to expand the sample to include the 25 largest bank holding companies.

With regard to the suggestion that in the market value of the stock of the bank holding companies in the sample is too low relative to book value, the Board noted that the stock of very few large bank holding companies currently is selling at or above book value. However, using the proposed sample of 25 large bank holding companies does raise the market-to-book ratio of the sample. For example, as of mid-1983, the market-to-book ratio for the 25 companies was about 83 percent versus about 75 percent for the smaller sample of 12 holding companies. On balance, there is no basis for judging why these firms' stock sells below book, or for knowing whether their correspondent divisions on a stand-alone basis (to the extent they could be segregated from the rest of the company) could command a stock market valuation at or near book. Similarly, there is no basis for judging how the market would value the Federal Reserve's payments services business. The Board believes that the market-book relationship in the proposed sample of the 25 largest holding companies would provide a reasonable basis for estimating the cost of equity in the PSAF calculation. Accordingly, for purposes of the PSAF model, the Board proposes to use the cost of equity of the 25 largest bank holding companies, which are the major alternative suppliers of the priced services offered by the Fed.

b. *Long-Term Assets.* The Federal Reserve faces the same judgments as other firms in apportioning the cost of shared assets (primarily) long-term assets such as property, buildings and equipment) among different operations.

The Federal Reserve currently apportions long-term assets on the basis of the ratio of operating expenses for priced services to total operating expenses. This expense ratio is approximately 40 percent. While this expense ratio provides a reasonable proxy for the assets employed in priced services and is administratively simple to implement, direct determination of the uses of assets based upon the Federal Reserve's Planning and Control System ("PACS") would more precisely identify the assets used in the provision of priced services. Accordingly, the Board proposes that the expense ratio method for asset determination be replaced by the direct determination method.

The proposed direct determination method would use the PACS accounting system, which provides data that can directly link single-purpose assets to either priced or non-priced services. In addition, PACS provides the same information for assets, such as buildings and centralized computers, that are used jointly in the provision of priced and non-priced services. For example, depreciation is a component of total occupancy costs, which are redistributed to all PACS activities. Since this depreciation is linked directly to assets carried on the Federal Reserve's balance sheet, the assets can be linked to the production of priced and non-priced services. The Board believes this procedure would result in a more precise determination of the asset base than the current method.

As indicated in Tables 1 and 2, the total value of assets attributable to priced services declines under the direct determination method. Although the value of furniture and equipment increases under the proposed methodology, the increase is more than offset by a decline in the value of buildings allocated to priced services. This occurs because the percentage of building space directly and indirectly used by priced services is, in fact, smaller than that which was estimated using the 40 percent expense ratio for priced services. In part, this is because staff of the System's data collection activities in support of monetary and economic policy and supervision and regulation functions, as well as bank examination and other non-priced and central bank functions occupy space arranged in the traditional office setting. On the other hand, check processing and other priced services functions predominantly occupy production-type facilities and make intensive use of space and other resources. In particular, check operations use less floor space per person and use equipment and space 24 hours a day as compared with a normal eight hour day in most non-priced areas. Further, fiscal agency and cash operations, which are non-priced services, occupy a significant amount of space.

c. *The Tax Rate Used in the PSAF Calculation.* The tax rate currently used for the PSAF calculation is based on the ratio of current taxes to total taxable income of the holding companies included in the sample. Deferred taxes are excluded from this ratio. In addition, an adjustment is made to add the tax effect of tax-free interest income from state and municipal securities. Deferred taxes are not factored into the ratio because they do not represent taxes paid during the current year and are likely not to be paid until far into the future. The adjustment for tax-free income is made because it is believed that holding such securities is related to the investment strategy of the organization.

The Board proposes that the current method of calculating the tax ratio with an adjustment to eliminate extraordinary gains and losses, by used to calculate the 1984 PSAF. This method is incorporated into the calculations shown in Table 2. With no changes in methodology, the 1984 tax rate for the original sample of 12 bank holding companies would be 35.1 percent—down from 38.1 percent in 1983. For the proposed larger sample, the 1984 tax rate would be 35.8 percent.

The Board is also requesting public comment on an alternative tax rate calculation method. The alternative tax rate would be based upon the financial statement provision for income taxes which takes into account deferred taxes. It has been suggested that from an accounting perspective, the inclusion of deferred taxes would provide a more useful representation of the overall tax liability of a firm. Under this method, the effective tax rate for 1984 would be approximately 40 percent and the pre-tax rate on equity would be approximately 23 percent, thus adding about $2 million to be recovered from the PSAF.

d. *Date for the Asset Base Estimate.* The current methodology uses the average asset base for the previous year, although estimated expenses are based on the year in which the PSAF is to be applied (e.g., the 1983 calculation used assets as of September 29, 1982). The Board proposes that the asset base for the year in which the PSAF would apply be adjusted to reflect the value of assets expected to be acquired and disposed of in that year. Since the assets of the Reserve Banks are expected to be higher in 1984 than in 1983, this change would increase PSAF recoveries by approximately $1.6 million.

e. *Sales Taxes.* The current methodology does not include an imputation for the sales taxes that would have been paid by the Reserve Banks if they were like other private firms. The Board proposes that the estimated sales taxes that would have been paid were it not for the Reserve Banks' statutory exemption be recovered as part of the PSAF for 1984.

This amount is tentatively estimated at approximately $4.9 million.

f. *Board of Governors Assets and Expenses.* Currently, Board staff expenses are not subject to recovery and Board assets are not included in the PSAF asset base. The Board proposes that the expenses incurred by Board staff working directly on the development of prices be subject to recovery. Similarly, the Board proposes that the assets employed in this specific activity be included in the PSAF asset base. It is estimated that in 1984, about $1.9 million in operating expenses at the Board of Governors would be included in expenses subject to recovery and that the asset base would be raised by about $0.5 million to take account of fixed assets of the Board of Governors used for this purpose.

g. *Shipping Expenses.* Shipping expenses currently are excluded from the PSAF calculation because the assets employed in the production of shipping services are not Federal Reserve assets, but rather are owned by the various carriers with whom the Reserve Banks deal. It has been suggested that this treatment is inappropriate, but the criticisms of this treatment has been in the context of PSAF methodology in which the PSAF asset base is determined on an expense ratio method. When priced service assets are determined directly as the Board is proposing instead of on an expense ratio basis, the removal of shipping expenses from the calculation has no effect on total recoveries. Including shipping expenses in the PSAF denominator would result in a lower PSAF being applied to a higher expense base with the product of the two remaining unchanged. As a result, the Board has determined that the original basis for excluding shipping expenses from the calculation remains correct, and proposes no change in this area.

h. *Leased Assets.* Currently, leases for space and equipment by the Federal Reserve Banks are not capitalized and the value of such leases are not included in the asset base used to calculate the PSAF.

Specific criteria have been established by the Financial Accounting Standards Board (FASB) in its Rule 13 for determining which leases should be capitalized. The Federal Reserve currently does not make a case-by-case determination as to which of its leases meet FASB Rule 13. However, in view of the rule, it has been suggested that the Federal Reserve capitalize its leases for purposes of determining the PSAF. Accordingly, the Board proposes that all leases that become effective on or after January 1, 1984, that meet FASB Rule 13 be capitalized. In addition, the Board proposes that current leases be examined to determine if any adjustments are needed. However, as indicated below, even if some such leases would be capitalized, it is very unlikely that this would have an effect on the dollars to be recovered via the PSAF.

Lease payments currently made by the Reserve Banks include the implicit financing costs that are incurred by the lessors for acquiring the assets. If the value of leases were capitalized and included in the PSAF, the financing costs would be double-counted—once in expenses to be recovered and once in the cost of capital associated with the asset base. Thus, to avoid such double-counting, these leases should not be in the asset base even if they meet FASB Rule 13. As a result, capitalizing leases would have no effect on the PSAF. The pattern of expenses, however, might be affected, to a limited extent, over the term of the leases because the proportion of interest to principal included in the amount amortized is higher in the early years and lower in the later years of the lease.

i. *Book Value of Physical Assets.* Currently, for purposes of calculating the PSAF, the Federal Reserve uses book value—as opposed to some estimate of market value—for Federal Reserve physical assets such as buildings and equipment. The Board proposes to continue to use the book value of fixed assets in the calculation of the PSAF. The use of book values is universal in private business. Furthermore, it is the actual historical cost of acquiring assets that must be financed—not their value at some later date. The practice of using book value for buildings, equipment, and property is consistent with banking industry practices and consistent with generally accepted accounting principles. Determining a normal rate of return on the basis of historical cost is the prevailing practice throughout the private sector. In particular, the assets of the large bank holding companies used as the source of the cost of capital are reported at book value.

A decision to value assets at market would essentially require using a market value accounting system since it would be necessary to take into account the income created by increases in asset values. Such an accounting system does not now exist. If such an accounting system were developed, the capital associated with increases in asset values would be generated automatically. In this event it would not be necessary to raise new funds to support the higher asset values.

Judging the relationship between market and book values is not easy. However, in considering the Federal Reserve's equipment (which is approximately $75 million or almost 30 percent of total long-term assets), it seems reasonable to conclude that market value is not likely to exceed book value and, in fact, book values might exceed market values. This would follow from the fact that such equipment is predominantly processing equipment where declining prices for new equipment and technological changes may reduce the market value of existing equipment at a faster rate than is provided for in the relevant depreciation schedules.

With regard to building assets, there is little question that, in the aggregate, the market value of Federal Reserve buildings is greater than adjusted book value. However, when considering the value of the space used by the Reserve Banks for priced service activities, it is important to recognize that the portions of the buildings used for priced services are not considered premium space. Therefore, the test of whether the book value of space devoted to Federal Reserve priced services is significantly at odds with market value cannot be judged by looking at the book value/market value relationship for the building as a whole, but rather should be judged by looking at the market value of the specific space used for priced services versus its adjusted book value. Even this more limited comparison is not easy to make. However, in looking at the prevailing rents charged by some of the Reserve Banks to outside tenants in relationship to the PACS charges for space devoted to priced services, it appears that such PACS charges are, on average, in line with this proxy for the market value of such space.

On this basis, it would appear that market values of space in Federal Reserve buildings devoted to priced service activities are approximately in line with the adjusted book values of such space. However, even if they were out of line, it is not clear—even from the perspective of overall economic efficiency as opposed to accounting norms—that market values should be used in calculating the cost of capital for Federal Reserve priced services. That is, if the Federal Reserve used market values and its competitors did not (assuming the market value of the competitors' assets also exceeded book value), all other things being equal, this could produce a less efficient allocation of societal resources.

It is because neither economics nor accounting can provide perfect guidance

on these issues that the approach taken with regard to the acquisition of new assets takes on special importance. That is, decisions to acquire or not to acquire a particular asset must be undertaken within the context of rigorous capital budgeting procedures. The Federal Reserve has had such procedures in place for a number of years. However, in view of their increased importance in the proceed service environment and to ensure that such procedures are consistent with the PSAF calculation, it has been determined to undertake a review of all such procedures to ensure that the methods used are appropriate and are consistently applied in all cases.

j. *Short-Term Assets.* For 1982 and 1983, the largest component (about $60 million) of short term assets was net adjustment float, which was included in the PSAF calculation as a proxy for liquid assets that the Reserve Banks would use for priced services. Since the value of all Federal Reserve check float—including net adjustment float—will be recovered through service fees in 1984, the Board proposes to remove the financing costs of net adjustment float from the asset base that is used to calculate the PSAF. It should be clearly emphasized that the effect of this change is essentially a shift from one class of recovery to another, which has only a small effect on the total dollars to be recovered.

As in past years, Federal Reserve short-term assets will include receivables, supplies, and deferred charges. In 1984 these items aggregate to about $27 million as opposed to about $20 million in 1983.

Under the proposed methodology, clearing balances that depository institutions maintain at the Reserve Banks to pay for services would be considered a short term asset. During the past year, the amount of clearing balances has grown considerably. Total clearing balances averaged $978 million between July 20 and August 10, 1983. The growth in clearing balances can be attributed to two factors. First, more depository institutions are finding clearing balances a convenient way of compensating for services and interterritory check float. Second, the number of small depository institutions using Federal Reserve services has increased and many of them prefer to compensate for services with clearing balances.

Because of the significant growth in clearing balances, the financing aspects of clearing balances and the methodology used to calculate earnings credits on clearing balances were reevaluated. In general, the income earned by the assets attributable to clearing balances should be at least equal the earnings credits provided on these balances. Using the average three-month U.S. Treasury bill rate over the first half of 1983 and assuming clearing balances in 1984 average $1 billion, the total income earned for 1984 would be $82.5 million.

Under current policy the Reserve Banks apply earnings credits only to the required clearing balance level, not the actual level. The earnings credits are calculated at the Federal funds rate. For 1984, it is estimated that about $800 million of the approximately $1 billion in clearing balances would be required balances. Excess balances arise in part because of sharp short run swings and seasonal peaks in the use of Federal Reserve services. Using the average Federal funds rate for the first half of 1983 and assuming $800 million in required clearing balances in 1984, the cost of such balances to the Federal Reserve would be $69.3 million. Thus, the System income on clearing balances is anticipated to exceed expenses by $13.2 million ($82.5 million −$69.3 million).

The Board also studied the methodology used by correspondent banks to calculate the rate of return they provide on correspondent balances, which are analytically similar to clearing balances. If a correspondent balance is maintained at a correspondent bank, the correspondent would be required to maintain reserves on the balances held. In most cases, the correspondent would be at a marginal reserve requirement rate of 12 percent. Generally, the correspondent bank takes this factor into consideration when it calculates the rate paid on the balance. Because correspondent banks generally adjust the earnings rate by the marginal reserve requirement, maintaining clearing balances at a Reserve Bank may be more attractive to a respondent bank. However, when maintaining a balance at a correspondent bank, the respondent bank is permitted to deduct the balance from its reservable liabilities. Therefore, the difference between the rate the Reserve Banks apply is not the 12 percent marginal reserve requirement rate but rather the difference between this 12 percent rate and the respondent banks' marginal reserve requirement rate, which is a "due from" deduction for the respondent. It has been estimated that the earnings rate applied by Reserve Banks should be reduced by about 7 percent on average for it to be comparable to the value generally received by respondent banks on clearing balances. Had this adjustment been made, the earnings credit rate would have been reduced approximately 7 percent on average. This reduction would result in revenues being $5 million less than the $13.2 million net interest revenue from clearing balances (see Table 4). Accordingly, the Board proposes that the rate the Reserve Banks apply to clearing balances be adjusted to reflect the net value of the balances to the respondent, which takes into account the correspondent's marginal reserve requirement and the respondent's due from deduction.

The amount of excess clearing balances are expected to be reduced in 1984 because of new procedures being adopted by the Reserve Banks. Reserve Banks are in the process of developing a new service that will allow depository institutions to transfer their excess balances more readily to other institutions, which could then invest them in the Federal funds market. If the excess balances are reduced to the point that the System income on such balances will be less than expenses, the rate paid on such balances may be adjusted. One adjustment under consideration in that event would be to calculate the earnings credit at the U.S. Treasury bill rate rather than at the Federal funds rate. In any event, clearing balances and their corresponding assets could be managed such that the total income to the Federal Reserve at least equals the cost of such balances to the Federal Reserve.

Net Effect of Proposed Changes. The net effect of the above proposed changes on the estimated dollars which must be recovered via the PSAF is modest. As indicated in Table 2, if the 1984 calculations were made using the present methodology, the percentage of these costs to capital would be 15.9 percent, the dollars to be recovered via the PSAF would be $59.4 million and the ratio of the dollars to be recovered to estimated expenses would be 15.34 percent. Using the proposed methodology, these magnitudes are 18.86 percent, $56.2 million, and 14.51 percent, respectively.

By order of the Board of Governors, October 12, 1983.

William W. Wiles,

Secretary of the Board.

TABLE 1.—PRO FORMA BALANCE SHEET PRICED SERVICES 1984

[In millions]

	Current method	Proposed method
Current Assets:	Assets	
Receivables	$23.6	$23.6
Adjustments, net	45.5	
Supplies	3.9	1.9
Deferred charges	2.0	1.6
	75.0	27.1
Government securities		1,000.0
Long-term assets:		
Bank premises	220.5	[1] 183.2
Equipment and furniture	78.2	87.7
	298.7	270.9
Total assets	373.7	1,298.0
	Liabilities and Equities	
Liabilities:		
Clearing balances		$1,000.0
Short-term debt	$75.0	27.1
Long-term debt	101.9	79.1
Total liabilities	176.9	1,106.2
Equity	196.8	191.8
Total liabilities and equities	373.7	1,298.0

[1] Includes an allocation of space for the Board building.

TABLE 2.—PRIVATE SECTOR ADJUSTMENT FACTOR

	1983 estimated	1984 Current	1984 Proposed
I. Assets to be financed (million):			
Current	$80.3	$75.0	$27.1
Long-term	288.5	298.7	270.9
II. Cost of capital:			
Short-term debt rate (percent)	13.06	9.63	9.48
Long-term debt rate (percent)	10.63	10.33	10.01
Pre-tax equity rate (percent)	20.53	21.17	21.25
Weighted average cost of capital (percent)	16.35	15.90	17.20
III. Tax rate (percent)	38.1	35.1	35.8
IV. Captial structure:			
Short-term debt (percent)	21.8	20.0	9.1
Long-term debt (percent)	25.8	27.3	26.5
Equity (percent)	52.4	52.7	64.4
PSAF:			
Recovery (millions)	$60.3	$59.4	$56.2
As percent of capital	16.35	15.90	18.86
As percent of expenses	16.01	15.34	14.51

TABLE 3.—PSAF AND OTHER RECOVERIES, CALENDAR YEAR 1984

[Millions]

	1984			
		Current		Proposed
I. PSAF recoveries:				
Total PSAF recoveries	$59.4			
Changes due to:				
Explicit pricing of adjustments, net			−4.4	
Direct determination of assets			−6.8	
Changes in the sample			+1.4	
Use of prospective assets			+1.6	
Sales taxes			+4.9	
Allocation of board assets			+.1	
Net changes				−3.2

TABLE 3.—PSAF AND OTHER RECOVERIES, CALENDAR YEAR 1984—Continued

[Millions]

	1984			
		Current		Proposed
Total PSAF recoveries				$56.2
II. Other recoveries:				
Estimated expenses	$387.3		$387.3	
Board of Governors expenses			1.9	
Transportation expenses	78.8		78.8	
Total other revenues		466.1		468.0
III. Float recovery:				
Value of "residual float"	39.3		39.3	
Value of adjustments, net			4.0	
Total float recoveries		39.3		43.3
Grand total of recoveries		564.8		567.5

TABLE 4.—CLEARING BALANCE REVENUE AND EXPENSE

[Millions]

	1984	
Total clearing balance income	$82.5	
Total clearing balance credits used	−69.3	
Net revenue from clearing balances	13.2	
Adjustments for reserve requirements	−5.0	
Net clearing balance income		$8.2

[FR Doc. 83-28270 Filed 10-17-83; 8:45 am]

BILLING CODE 6210-01-M

Federal Open Market Committee; Domestic Policy Directive of August 23, 1983 [1]

In accordance with § 217.5 of its rules regarding availability of information, there is set forth below the Committee's Domestic Policy Directive issued at its meeting held on August 23, 1983.

The following domestic policy directive was issued to the Federal Reserve Bank of New York:

The information reviewed at this meeting suggests continued rapid growth in real GNP in the current quarter. Industrial production increased sharply in July following large gains in the second quarter. Nonfarm payroll employment also rose substantially further in July and the civilian unemployment rate declined ½ percentage point to 9.5 percent. After rising sharply in the spring, retail sales have leveled off recently. Housing starts edged down over the past two months but permits continued to rise. Recent data on new orders and shipments on average continued to indicate strength in the demand for business equipment. In July, information on producer and consumer prices and the index of average hourly earnings was consistent with earlier indications of a considerable moderation in the rate of inflation.

Growth in the broader monetary aggregates slowed substantially in July, bringing M2 to a level near the midpoint of the Committee's range for 1983 and M3 to a level somewhat below the upper limit of its range. Growth in M1 decelerated considerably from its May–June pace, but its level remained above the Committee's monitoring range for the year. Interest rates rose appreciably through much of the intermeeting period but recently market rates have retraced most of their rise.

In part reflecting the course of U.S. interest rates, the weighted average value of the dollar against major foreign currencies rose substantially further in July and early August, but the rise was followed by a subsequent decline that reversed most of the earlier increase. The U.S. foreign trade deficit was smaller in June than in May, but the deficit in the second quarter was much larger than in the first as imports rose while exports were essentially unchanged.

The Federal Open Market Committee seeks to foster monetary and financial conditions that will help to reduce inflation further, promote growth in output on a sustainable basis, and contribute to a sustainable pattern of international transactions. At its meeting in July the Committee reconsidered the growth ranges for monetary and credit aggregates established earlier for 1983 in furtherance of these objectives and set tentative ranges for 1984. The Committee recognized that the relationships between such ranges and ultimate economic goals have become less predictable; that the impact of new deposit accounts on growth of the monetary aggregates cannot be determined with a high degree of confidence; and that the availability of interest on large portions of transaction accounts may be reflected in some changes in the historical trends in velocity.

Against this background, the Committee at its July meeting reaffirmed the following growth ranges for the broader aggregates: For the period from February–March of 1983 to the fourth quarter of 1983, 7 to 10 percent at an annual rate for M2; and for the period from the fourth quarter of 1982 to the fourth quarter of 1983, 6½ to 9½ percent for M3. The Committee also agreed on tentative growth ranges for the period

[1] The Record of Policy actions of the Committee for the meeting of August 23, 1983, is filed a part of the orginal document. Copies are available upon request to The Board of Governors of the Federal Reserve System, Washington, D.C. 20551.

from the fourth quarter of 1983 to the fourth quarter of 1984 of 6½ to 9½ percent for M2 and 6 to 9 percent for M3. The Committee considered that growth in M1 in a range of 5 to 9 percent from the second quarter of 1983 to the fourth quarter of 1983, and in a range of 4 to 8 percent from the fourth quarter of 1983 to the fourth quarter of 1984 would be consistent with the ranges for the broader aggregates. The associated range for total domestic nonfinancial debt was reaffirmed at 8½ to 11½ percent for 1983 and tentatively set at 8 to 11 percent for 1984.

In implementing monetary policy, the Committee agreed that substantial weight would continue to be placed on the behavior of the broader monetary aggregates. The behavior of M1 and total domestic nonfinancial debt will be monitored, with the degree of weight placed on M1 over time dependent on evidence that velocity characteristics are resuming more predictable patterns. The Committee understood that policy implementation would involve continuing appraisal of the relationships between the various measures of money and credit and nominal GNP, including evaluation of conditions in domestic credit and foreign exchange markets.

The Committee seeks in the short run to maintain the existing degree of reserve restraint. The action is expected to be associated with growth of M2 and M3 at annual rates of around 8 percent from June to September, consistent with the targets established for these aggregates for the year. Depending on evidence about the strength of economic recovery and other factors bearing on the business and inflation outlook, lesser restraint would be acceptable in the context of a significant shortfall in growth of the aggregates from current expectations, while somewhat greater restraint would be acceptable should the aggregates expand more rapidly. The Committee anticipates that a deceleration in M1 growth to an annual rate of around 7 percent from June to September will be consistent with its third-quarter objectives for the broader aggregates, and that expansion in total domestic nonfinancial debt would remain within the range established for the year. The Chairman may call for Committee consultation if it appears to the Manager for Domestic Operations that pursuit of the monetary objectives and related reserve paths during the period before the next meeting is likely to be associated with a federal funds rate persistently outside a range of 6 to 10 percent.

By order of the Federal Open Market Committee, October 11, 1983.

Stephen H. Axilrod,

Secretary.

[FR Doc. 83-28270 Filed 10-17-83; 8:45 am]

BILLING CODE 6210-01-M

FEDERAL TRADE COMMISSION

Granting of Request for Early Termination of the Waiting Period Under the Premerger Notification Rules; Mesa Petroleum Co. et al.

Section 7A of the Clayton Act, 15 U.S.C. 18a, as added by Title II of the Hart-Scott-Rodino Antitrust Improvements Act of 1976, requires persons contemplating certain mergers or acquisitions to give the Federal Trade Commission and the Assistant Attorney General advance notice and to wait designated periods before consummation of such plans. Section 7A(b)(2) of the Act permits the agencies, in individual cases, to terminate this waiting period prior to its expiration and requires that notice of this action be published in the **Federal Register.**

The following transactions were granted early termination of the waiting period provided by law and the premerger notification rules. The grants were made by the Federal Trade Commission and the Assistant Attorney General for the Antitrust Division of the Department of Justice. Neither agency intends to take any action with respect to these proposed acquisitions during the applicable waiting period:

Transaction and Waiting Period Terminated Effective

(1) Transaction Number 83-0746—Mesa Petroleum Company's proposed acquisition of voting securities of KNE Energy, Inc., October 6, 1983

(2) Transaction Number 83-0761—Roxboro Investments (1976) Ltd.'s proposed acquisition of the Permian Corporation (Occidental Petroleum Corporation, UPE), October 6, 1983

(3) Transaction Number 83-0776—The Superior Oil Company's proposed acquisition of assets of Southland Royalty Company, October 6, 1983

(4) Transaction Number 83-0781—Tandy Corporation's proposed acquisition of voting securities of O'Sullivan Industries, Incorporated (Conroy, Inc., Hugh Halff, Jr., UPE), October 6, 1983

(5) Transaction Number 83-0785—Gerber Products Company's proposed acquisition of assets of Skyland International Corporation, October 6, 1983

(6) 83-0725—GFI/Knoll International Holding Company's proposed acquisition of assets of Scott Paper Company, September 30, 1983

(7) 83-0759—Mutihospital Mutual Insurance, Limiteds's proposed acquisition of voting securities of American Continental Insurance, Company (American Financial Corporation, UPE), September 30, 1983

(8) 83-0767—Alco Standard Corporation's proposed acquisition of voting securities of Southwest Distributing Company, October 5, 1983

(9) 83-0774—Riedel International Inc.'s (Arthur A. Riedel, UPE) of assets of Lone Star Industries, Incorporated, October 5, 1983

(10) 83-0744—St. Regis Corporation's proposed acquisition of voting securities of the Depandable Insurance Group, Inc. of America (C. Herman Terry, UPE), October 5, 1983

(11) Transaction Number 83-0757—Irving Trust, Trustee of United States Sugar Corporation, Corporation Employee Stock Ownership Plan of voting of United States Sugar Corporation, September 29, 1983

(12) Transaction Number 83-0722—Berkshire Hathaway, Inc.'s proposed acquisition of voting securities of Nebraska Furniture Mart Inc., September 29, 1983

(13) Transaction Number 83-0749—The UpJohn Companies of voting securities of O's Gold Seed Company (Central Soya Company, Inc.), September 28, 1983

(14) Transaction Number 83-07769—Sacks Textile Associates, Inc.'s proposed acquisition of voting securities of Wellman, Inc. (John G. Wellman, UPE), September 28, 1983

(15) 83-0738—The Williams Companies' proposed acquisition of voting securities of Northwest Energy Companies, September 26, 1983

(16) 83-0740—The Williams Companies proposed acquisition of voting of Phillips Petroleum Chemical Company (Philip Pacific Chemical Company, UPE), September 26, 1983

(17 Transaction Number 83-0799—Gerber Products Company's proposed acquisition of voting securities of Weather Tamer and Affiliates, October 7, 1983

(18) 83-0714—Eastman Kodak Company's proposed acquisition of assets of the Detatape Division of Bell & Howell Company, September 27, 1983

(19) 83-0762—Xerox Corporation's proposed acquisitioni of assets of Circle Leasing Corporation (Merchants National Corporation, UPE), September 29, 1983

(20) 83-0765—James H. Jones' proposed acquisition of voting securities of Kahan & Lessin Company (Fleming Companies, Inc., UPE), September 29, 1983

(21) 83-0768—Peabody International Corporation's proposed acquisition of voting securities of Dale Electronics Inc. (The Lionel) Corporation, UPE), September 29, 1983

(22) 83-0763—KKR Associates' proposed acquisition of voting securities of HMW Industries, Inc., September 29, 1983

(23) 83-0764—KKR Associates' proposed acquisition of voting securities of HMW Industries, Inc., September 29, 1983

(24) 83-0623—American Medical International's proposed acquisition of assets of Doctor's Medical Center, Incorporated, September 23, 1983

(25) 83-0754—Enstar Corporation's proposed acquisition of voting securities of Indonesian Superior Oil Company (The Superior Oil Company, UPE), September 23, 1983

(26) 83-0758—The Prudential Insurance Company of America's proposed acquisition of voting securities of Eastern Propane, Incorporated (UGI Corporation, UPE), September 23, 1983

(27) Transaction Number 83-0804—Saugatuck Capital Company Limited Partnership's proposed acquisition of assets of C-E Morgan, Inc. (Combustion Engineering, Inc., UPE)—October 6, 1983

FOR FURTHER INFORMATION CONTACT: Patricia A. Foster, Compliance Specialist, Premerger Notification Office, Bureau of Competition, Room 301, Federal Trade Commission, Washington, D.C. 20580 (202) 523-3894.

By direction of the Commission.

Emily H. Rock,

Secretary.

[FR Doc. 83-28335 Filed 10-17-83; 8:45 am]

BILLING CODE 6750-01-M

DEPARTMENT OF HEALTH AND HUMAN SERVICES

Food and Drug Administration

Consumer Participation; Open Meetings

AGENCY: Food and Drug Administration.

ACTION: Notice.

SUMMARY: The Food and Drug Administration (FDA) is announcing the following consumer exchange meetings: SEATTLE DISTRICT OFFICE, chaired by Kenneth A. Hansen, District Director. The topic to be discussed is Direct-to-Consumer Advertising of Prescription Drugs.

DATE: Tuesday, October 25, 1983, 1:30 p.m. to 3:30 p.m.

ADDRESS: Federal Bldg., Rm. 589, U.S. Courthouse, 550 Fort St., Boise, ID 83724.

FOR FURTHER INFORMATION CONTACT: Ellen M. Miller, Consumer Affairs Officer, Food and Druig Administration, 5009 Federal Office Bldg., Seattle, WA 98174, 206-442-1311.

KANSAS CITY DISTRICT OFFICE, chaired by James A. Adamson, District Director. The topic to be discussed is Direct-to-Consumer Advertising of Prescription Drugs.

DATE: Wednesday, October 26, 1983, 9 a.m. to 12 p.m.

ADDRESS: Senior Services, Inc., 335 West Lewis St., Wichita, KS. 67202.

FOR FURHTER INFORMATION CONTRACT: Lorena A. Meyers, Consumer Affairs Officer, Food and Drug Administration, 1009 Cherry St., Kansas City, MO 64106, 816-374-3817.

or

Patricia MacDonald, Director of Health Education, Wichita-Sedgwick County Department of Community Health, 1900 East Ninth St., Wichita, KS 67214, 316-268-8401.

SUPPLEMENTARY INFORMATION: The purpose of these meetings is to encourage dialogue between consumers and FDA officials, to identify and set priorities for current and future health concerns, to enhance relationships between local consumers and FDA's District Offices, and to contribute to the agency's policymaking decisions on vital issues.

Dated: October 12, 1983.

William F. Randolph,

Acting Associate Commissioner for Regulatory Affairs.

[FR Doc. 83-28334 Filed 10-13-83; 4:02 pm]

BILLING CODE 4160-01-M

Health Care Financing Administration

Medicare and Medicaid Programs; Schedules of Guidelines for Physical Therapy and Respiratory Therapy Services

Correction

In FR Doc. 83-26740, beginning on page 44922, in the issue of Friday, September 30, 1983, make the following corrections:

1. On page 44928, in the first paragraph under the table, in the third line "increase of 12." should read "increase by 12."

2. On page 44929, in the third column, in the Certified Respiratory table, in the entry for Wyoming, "16.39" should read "16.29".

BILLING CODE 1505-01-M

DEPARTMENT OF THE INTERIOR

Bureau of Land Management

Oregon; John Day Resource Management Plan, Summary of Proposed Land Use Alternatives and Scoping Meeting

AGENCY: Bureau of Land Management, Interior.

ACTION: Notice of availability of John Day document and notice of public meeting for participation and scoping of John Day document.

SUMMARY: Pursuant to Section 43 CFR 1610.3 and 1610.4-5 of the regulations for resource management planning, the Department of the Interior, Bureau of Land Management, Burns District Office has developed proposed alternatives to facilitate scoping of the John Day Resource Management Plan (RMP) and Environmental Impact Statement (EIS). Two public meetings have been scheduled to invite comments in person on the plan.

SUPPLEMENTARY INFORMATION:

The plan will result in land use allocations and resource management directions for approximately 182,000 acres of public land in the Three Rivers Resource Area. The John Day planning area is located in Grant and the northern portion of Harney Counties. Major resource management issues include grazing and timber management, land tenure and anadromous fisheries.

The draft plan and EIS will be available for public review in the spring of 1984 and the final statement is scheduled to be completed in September of 1984. Decisionmaking will take place in the fall of 1984 and include publication of a record of decision and rangeland program summary. The original notice of intent to prepare the John Day RMP/EIS was published in **Federal Resister** and local news media on Juanuray 28, 1981. A revised notice of intent, published in the **Federal Register** on December 16, 1982 suggested that an amendment to the existing plan might be more appropriate than a total plan revision. Public comments and staff analysis confirmed the need for continuation of the RMP process, and four proposed alternatives have been developed to address the major resource management and allocation issues.

Copies of the John Day RMP Summary of Proposed Land Use Alternatives have been sent to the Districts' current mailing list. Copies are also available for review at:

BLM, Burns District Office, 74 Alvord, St., Burns, OR

BLM, Oregon State Office, 825 N.E. Multnomah St., Portland, OR

Grant County Library, 507 South Canyon Blvd, John Day, OR

Harney County Library, 80 West D St., Burns, OR

The public is invited to submit written comments, by November 25, 1983 on (1) the elements which should be in the preferred alternative plan (or proposed action); (2) ideas on the formulation of other alternatives which should be addressed in the EIS; (3) ideas on issues which should be addressed in the EIS and (4) factors or criteria shich should be used in the development or selection of a preferred alternative plan. Comments or questions may also be

presented in person at one of the scheduled planning and EIS scoping meetings. Meetings have been scheduled in the Grant County Courthouse in John Day on November 15, 1983, at 7:30 p.m. and in Burns at the Harney County Museum Clubroom on November 16, 1983 at 7:30 p.m.

Written public comments will be available for public review in the District Office. Public and interagency comments and suggestions will be reviewed by the Burns District Advisory Board on December 12, 1983 in Burns, Oregon. The final plan will be approved by the BLM, Oregon State Director. Additional information may be obtained or viewed at the Burns District Office during regular business hours (7:45 a.m. to 4:30 p.m.)

DATE: Comments must be received by November 25, 1983.

ADDRESS: Written comments, requests for copies of the summary document or request for further information should be directed to: Larry Morgan, Bureau of Land Management, Burns District, 74 South Alvord Street, Burns, OR 97720, Telephone (503) 573-5241.

Dated: October 7, 1983.

Thomas R. Thompson, Jr.,

Associate District Manager.

[FR Doc. 83-28263 Filed 10-17-83; 8:45 am]

BILLING CODE 4310-84-M

National Public Lands Advisory Council; Call for Nominations

AGENCY: Bureau of Land Management, Interior.

ACTION: Call for Nominations for National Public Lands Advisory Council.

SUMMARY: The purpose of this notice is to call for nominations for seven memberships on the Bureau of Land Management's National Public Lands Advisory Council.

The Council consists of 21 members. Under the staggered-term arrangement instituted by the Secretary of the Interior in 1981, the terms of seven members on the Council will expire on December 31, 1983. Current Council members may be reappointed or new members may be appointed. Terms of appointment will be for three years, beginning January 1, 1984, and expiring December 31, 1986.

Nominees for membership should be well qualified through education, training and experience to give informed and objective advice concerning land use and resource planning for the public lands.

DATE: Nominations should be received by the Bureau of Land Management by November 18, 1983.

ADDRESS: Persons wishing to nominate individuals to serve on the Council should send biographical data that includes name, address, profession, and other relevant information about the candidate's qualifications to: Director (150), Bureau of Land Management, Department of the Interior, Washington, D.C. 20240.

SUPPLEMENTARY INFORMATION: The function of the Council is to advise the Secretary of the Interior, through the Director, Bureau of Land Management, on policies and programs of a national scope related to the resources and uses of public lands under the jurisdiction of the Bureau of Land Management.

The Council is expected to meet three times a year. Additional meetings may be called by the Director in connection with special needs for advice. Members will serve without salary, but will be reimbursed for travel and per diem expenses at rates prevailing for Government employees.

FOR FURTHER INFORMATION CONTACT: Karen Slater, Bureau of Land Management (150), Department of the Interior, Washington, D.C 20240. Telephone: (202) 343-2054.

Dated: October 13, 1983.

Robert F. Burford,

Director.

[FR Doc. 83-28350 Filed 10-17-83; 8:45 am]

BILLING CODE 4310-84-M

Medford District Advisory Council; Meeting

Notice is hereby given in accordance with Pub. L. 92-463 that a meeting of the Bureau of Land Management, Medford District Advisory Council will be held November 16, 1983.

On November 16 the meeting will begin at 2:30 p.m. in the Oregon Room of the Bureau of Land Management Office at 3040 Biddle Road, Medford, Oregon. The agenda for the meeting will include:

(1) A discussion of the Medford District's Draft Environmental Impact Statement on grazing;

(2) An update on the timber sale contract relief implementation policy (grace period continuation) for the district; and

(3) Attending a public meeting on the Grazing Draft Environmental Impact Statement starting at 7:30 p.m. in the Medford District Office's Oregon Room.

The meeting of the advisory council is open to the public. Interested persons may make oral statements to the board between 2:30 p.m. and 4:30 p.m. on November 16, of file written statements for the board's consideration. Anyone wishing to make an oral statement must notify the District Manager, Bureau of Land Management, 3040 Biddle Road, Medford, Oregon 97504, by November 12, 1983. Depending on the number of persons wishing to make oral statements, a per-person time limit may be established by the District Manager.

Summary minutes of the board meeting will be maintained in the district office and be available for public inspection and reproduction (during regular business hours) within 30 days following the meeting.

Date signed: October 7, 1983.

Hugh R. Shera,

District Manager.

[FR Doc. 83-28317 Filed 10-17-83; 8:45 am]

BILLING CODE 4310-84-M

Bureau of Reclamation

[INT-DES 83-69]

Ruedi Reservoir Round 2 Water Sale, Fryingpan-Arkanas Project, Colorado; Public Hearing on Draft Supplement to the Final Environmental Statement

A public hearing will be held in Glenwood Springs, Colorado, by the Bureau of Reclamation to receive comments on the draft supplement (INT-DES 83-69), to the final environmental statement for the Fryingpan-Arkanas Project, Colorado. The draft supplement was filed with the Environmental Protection Agency on October 6, 1983.

The final environmental statement (INT-FES 75-43) was filed in April 1975 in compliance with the National Environmental Policy Act of 1969, as amended.

The draft supplement displays the environmental consequences of a proposed water sale that would provide for future competing water demands that include industrial (primarily oil shale), municipal, recreation, wildlife, and fisheries.

The public hearing will be held at the Ramada Inn in Glenwood Springs, Colorado, on November 17, 1983, starting at 9 a.m. and continuing until all oral comments are heard. Hearing witneses will be allowed 10 minutes to present their oral comments.

Speakers will not be allowed to trade or consolidate the time in order to obtain a longer oral presentation; however, the Hearing Officer may allow a speaker to provide additional oral comments after scheduled witnesses

have been heard. Additional comments will be limited to 10 minutes.

Persons wishing to make oral statements will be scheduled in the order that written or telephone requests are received unless a specific time period is requested. If a speaker requests a specific time period, the speaker will be scheduled to speak as close to the requested time as possible. Scheduled speakers not present when called will lose their privilege in the scheduled order, and their names will be recalled after all other scheduled speaker have been heard.

Individuals and organizations wishing to make oral statements should contact the Lower Missouri Regional Office, Bureau of Reclamation, Building 20, Denver Federal Center, Denver, Colorado 80225, telephone (303) 234-3779, by letter or telephone. Requests for scheduled presentations will be accepted until 4 p.m. on November 15, 1983. Speaking requests received subsequent to that time will be handled on a first come, first served basis following the scheduled presentations. Written comments from those unable to attend and those wishing to supplement their oral presentations will be accepted for the record until 4 p.m., December 5, 1983. Written comments should be addressed to the Regional Director at the address listed above and should specify that they are to be included in the hearing record.

Dated: October 12, 1983.

Jed D. Christensen,

Acting Commissioner of Reclamation.

[FR Doc. 83-28262 Filed 10-17-83; 8:45 am]

BILLING CODE 4310-09-M

National Park Service

Overmountain Victory National Historic Trail Advisory Council; Meeting

Notice is hereby given in accordance with the Federal Advisory Commission Act that a meeting of the Overmountain Victory National Historic Trail Advisory Council will be held at 10:00 a.m. on Thursday, November 3, 1983, in the Soco House, Blue Ridge Parkway, North Carolina.

The purpose of the Overmountain Victory National Historic Trail Advisory Council is to consult and advise with the Secretary of the Interior or his designee on matters of planning, management and trail development of the Overmountain Victory National Historic Trail. The agenda will include: Interpretive Brochure, Commemorative Motor Route Sign Program, the McDowell House, Expanded National Park Service Role and Certification Process.

The members of the Advisory Commission are as follows:

Mr. Robert M. Baker, Chairman
Mr. James A. Cannaday
Mr. Randall Ray Gregory
Mrs. Jean Hawkins
Mr. Dennis Kline
Mr. Tommy G. Reed
Mr. Sydnor M. White
Mr. Fred Burgin, Jr.
Mrs. Harriette Vaden Price
Mr. Walter Carl Cockerham
Mr. Tyron Elliott
Mr. Hugh Atkins
Mr. David L. Thomas
Mr. Roy A. Taylor
Mr. Walter H. Schrader
Mr. Frank Robinson
Mr. W. Blair Keller, Jr.
Mr. Terry Chilcoat
Mr. George Olson
Mr. Andrew Duncan, Jr.
Mr. Jon A. Moffett
Mr. John F. Nichols, Jr.
Mr. Carl Gillis, Jr.
Mr. William H. Hecht
Mr. Richard L. Heffner
Mr. Mark C. Hicks, Jr.
Mr. David B. Morgan III
Mr. John S. Wilkerson

The meeting will be open to the public; however, facilities and space for accommodating members of the public are limited. Any member of the public may file with the commission a written statement concerning the matter to be discussed.

Persons wishing further information concerning the meeting or who wish to submit written statements, may contact Paul Swartz, Chief, Planning and Compliance Division, National Park Service, Southeast Region, 75 Spring Street, SW., Atlanta, Georgia 30303, Telephone 404/221-5465. Minutes of the meeting will be available for public inspection at the above address approximately 4 weeks after the meeting.

Dated: October 6, 1983.

Neal G. Guse, Jr.,

Acting Regional Director, Southeast Region.

[FR Doc. 83-28339 Filed 10-17-83; 8:45 am]

BILLING CODE 4310-70-M

Santa Monica Mountains National Recreation Area; Meeting

Notice is hereby given that two public hearings of the Santa Monica Mountains National Recreation Area will be held. They are scheduled for Tuesday, November 8, 1983 at 7:30 p.m., in the Elkins Auditorium at Pepperdine University, 24255 West Pacific Coast Highway, Malibu, California, and Wednesday, November 9, 1983 at 7:30 p.m. in the City Council Hall Chambers, 401 Hillcrest Drive Thousand Oaks, California.

The topic for discussion will be the Code of Federal Regulations, special regulations for the Santa Monica Mountains National Recreation Area.

Persons wishing to receive further information on this meeting or who wish to submit written statements may contact the Superintendent, Santa Monica Mountains National Recreation Area, 22900 Ventura Boulevard, Suite 140, Woodland Hills, California 91364.

A summary of public comment will be available by December 9, 1983.

Dated: October 7, 1983.

Daniel R. Kuehn,

Superintendent.

[FR Doc. 83-28340 Filed 10-17-83; 8:45 am]

BILLING CODE 4310-70-M

Cuyahoga Valley National Recreation Area, Ohio; Availability of Plans of Operations for Drilling an Oil Well

Pursuant to Title 36, Chapter 1, Part 9, Minerals Management Comprehensive Regulations, notice is hereby given that the National Park Service has received a plan of operations for drilling an oil well at Cuyahoga Valley National Recreation Area from the K.S.T. Oil and Gas Co., Inc., of Stow, Ohio 44224.

A copy of the plan of operations is available for review and comment at the Headquarters of the Cuyahoga Valley National Recreation Area, 15610 Vaughn Road, Brecksville, Ohio 44141. Written comments should be mailed to the Superintendent at this address and such comments will be made a part of the official record when received within thirty (30) days of the date of the publication of this notice.

Inquiries should be made to Rodney D. Royce, Compliance Officer, at the above address or at telephone (216) 526-5256, Ext. 42.

Dated: October 5, 1983.

Randall R. Pope,

Regional Director, Midwest Region.

[FR Doc. 83-28253 Filed 10-17-83; 8:45 am]

BILLING CODE 4310-70-M

[N1623]

Grand Canyon National Park, Arizona; Availability of Backcountry Management Plan

The National Park Service, U.S. Department of the Interior, has updated and modified the Backcountry Management Plan for Grand Canyon National Park and proposed to implement this plan in October, 1983. An

environmental assessment was prepared in September, 1982 which publicly presented several alternatives for backcountry management at Grand Canyon National Park. These alternatives were: Continuing to manage the backcountry under the 1974 guidelines allowing unrestricted use in the backcountry, and implementing the proposed action.

Public meetings were held in Flagstaff, Phoenix, Tucson, Arizona; and Kanab, Utah. In addition, 600 environmental assessments were sent out to the public for a 60-day review period. A rough draft Backcountry Management Plan was then prepared. One hundred and twenty copies of this draft were sent out to the public for a 40-day review period. The park received one hundred and twenty four letters commenting on the assessment of the draft plan.

The following table summarizes the changes made to the September 1982 Environmental Assessment as a result of public comments.

Proposed Action

Environmental assessment, September 1982	Final plan
1. Identification of four backcountry zones developed, threshold, primitive undeveloped.	No change.
2. Change from trailhead limits to use-area limits.	Do.
3. Intensified monitoring effort.	Do.
4. Stabilize total animal use at recent levels.	Do.
5. Implement backcountry use limits based upon parties and groups rather than total number of individuals.	Do.
6. Allow at-large camping in some areas and designated sites in others (maintain established campgrounds).	Do.
7. Propose specific limits on use in each use-area.	The limits in undeveloped areas increased from one to two parties of one group per night. The one party limit was criticized as being too restrictive for such large areas. The limits in one threshold area (Upper Tapeats) were increased from one party to two parties to more accurately reflect the physical carrying capacity. Due to the existence of primitive roads, Snap Point and Grant Wash Cliffs Use-areas were redesignated from undeveloped to primitive. The Cross-canyon Corridor Campground party limits were modified to reflect more accurately the number of campsites available (Indian Gardens from 13 to 16 parties, Bright Angel from 29 to 33 and Cottonwood from 10 to 14). The Turquois, at 3 parties and one group, was changed to Ruby (2 parties, 1 group) and State (2 parties, 1 group); Apache, at 1 party and zero groups was split into Fossil (2 parties or 1 group) and Olo (2 parties, or 1 group).
8. Computerize reservation system.	No change.
9. Eliminate phone-in reservations.	Do.
10. Six-month reservation period.	The 6-month reservation period was changed to a 15-month reservation period.
11. Limit stock to maintained corridor trails and to threshold and primitive rim use areas.	No change.
12. Limit stock overnite in corridor to one party per campground per nite, not to exceed 10 persons.	The Bright Angel campgrounds is the only campground authorized for overnight private stock use.
13. Annual plan review	No change.
Other options section	
14. Cross-canyon Corridor Use Plan.	One comment (favorable was received). No further action has been taken or recommended.
15. Commercial Use (six options were granted).	The plan allows for commercial use under a commercial use license or concessions permit only. Use is allowed in all backcountry areas but Cross-canyon Corridor commercial use is restricted from the period March 1 through September 30 to purposes of access to non-corridor backcountry areas only (with the exception of special populations groups).
16. Reservations Procedures (both fees and reservation periods of different lengths were presented here).	No fees will be charged until authorized by Congress. Change to 15 month reservation period, (see No. 10 above).
17. Campfires (three options presented).	Campfires on rims in fire grates at designated sites only, no at-large wood collections.

Implementation of the plan will accomplish the following objectives: (1) Stabilize use at recent historic levels in the backcountry, (2) provide the backcountry hiker with an opportunity for a wide spectum of backcountry recreation opportunities, (3) improve the ability of management to accommodate the large demand for overnight use within the Cross-canyon Corridor campgrounds and (4) promote a more even distribution of backcountry use throughout the year. A backcountry monitoring program will assert changes in backcountry conditions and patterns of visitor use. Future use modifications, mitigation and management actions will be based on the information provided by this program and upon an annual program review.

Specific actions under the plan include: The division of the backcountry into use-areas and zoning of these use-areas as either developed, threshold, primitive, or undeveloped; development of criterion upon which to base management of these four zones; establishment of use limits for each area (based upon number of individual parties and groups per night); implementation of a research and monitoring program; and mitigation of some impacts through a site restoration and rehabilitation program. Also included under the plan are changes to the backcountry reservations system (lengthening of the reservation period and elimination of reservations by telephone).

A limited number of copies of the document are available on request from the Superintendent, Grand Canyon National Park, P.O. Box 129, Grand Canyon, Arizona 56023 (602) 638–2411.

Dated: October 3, 1983.

W. Lowell White,

Acting Regional Director, Western Region.

[FR Doc. 83-28254 Filed 10-17-83; 8:45 am]

BILLING CODE 4310-70-M

Grand Canyon National Park, Grand Canyon, Arizona; Revision of the 1977 Grand Canyon Village Development Concept Plan

Abstract: When the Grand Canyon Village Development Concept Plan was completed in 1977, it specified removal of the entire Bright Angel Lodge complex. A reevaluation of the significance of the lodge complex led to its nomination to the National Register of Historic Places in 1982. Based on the new status of the Bright Angel Lodge, the National Park Service now proposes its retention. This will increase the number of lodging units in the Village area from 871 to 904.

Background: Two of the goals as stated in the 1977 Grand Canyon Village Development Concept Plan were to (1)

mitigate the haphazard and unsightly development and congestion along the rim in the Historic Village, and (2) recognize, protect and utilize the architectural heritage.

Based on a review of historic structures in the South Rim vicinity, 1975 the National Park Service nominated the Grand Canyon Village Historic District to the National Register of Historic Places. This district form listed the Bright Angel Lodge complex as a nonhistoric element. Due to the nonhistoric status of the lodge complex, it was recommended for removal in accordance with the above-stated objective to remove congestion along the rim in the Historic District. Scheduled for removal in Phase I were about 20 cabins west of the Bright Angel Lodge and in Phase III was the remainder of the lodge complex, including the rim cabins and the lodge building itself.

In October 1982, an Addendum was submitted to the National Register staff which proposed the designation of the Bright Angel Lodge complex as a significant element of the Village Historic District. Based on the change in status for the Bright Angel Lodge complex, the National Park Service has reevaluated retention of the lodge complex in accordance with the objective to protect and utilize the architectural heritage in the Village area.

Proposal

Based on the change in status for the Bright Angel Lodge complex, the National Park Service is now proposing retention of the lodge complex in accord with the plan objective to protect and utilize the architectural history. Retention of the lodge complex will increase the South Rim lodging capacity by about 4 percent from 870 units to 903 units.

Environmental Review

The evironmental impacts of this action were fully analyzed and presented to the public in the environmental impact statement on the proposed development concept plan (FES 76–9, February 9, 1976). Consequently, the action is considered a categorical exclusion under Departmental Manual 516 DM 6, Appendix 7.4A(1): changes or amendments in approved plans, when such changes have no potential for causing significant environmental impact. In addition, a new Memorandum of Agreement between the National Park Service, State Historic Preservation Officer and Advisory Council on Historic Preservation has been initiated which reflects the plan amendment.

For further information on this plan revision, please contact Superintendent, Grand Canyon National Park, P.O. Box 129, Grand Canyon, Arizona 86023, telephone (602) 638–7888.

Dated: October 5, 1983.

W. Lowell White,

Acting Regional Director, Western Region.

[FR Doc. 83–28255 Filed 10–17–83; 8:45 am]

BILLING CODE 4310-70-M

National Register of Historic Places; Notification of Pending Nominations

Nominations for the following properties being considered for listing in the National Register were received by the National Park Service before October 7, 1983. Pursuant to section 60.13 of 36 CFR Part 60 written comments concerning the significance of these properties under the National Register criteria for evaluation may be forwarded to the National Register, National Park Service, U.S. Department of the Interior, Washington, D.C. 20243. Written comments should be submitted by November 1, 1983.

Carol D. Shull,

Chief of Registration, National Register

ALABAMA

Russell County

Phenix City, *Brooks-Hughes House (Phenix City MRA),* 1010 Sandfort Rd.

Phenix City, *Brownville-Summerville Historic District (Phenix City MRA),* Roughly bounded by 15th and 23rd Sts., and 6th and 11th Aves.

Phenix City, *Floyd-Newsome House (Phenix City MRA),* 900 22nd St.

Phenix City, *Girard High School (Phenix City MRA),* Sandfort Rd.

Phenix City, *Girard Historic District (Phenix City MRA),* Roughly bounded by 8th Pl., 10th St., 5th., and 8th Aves.

Phenix City, *Kid Alley Residential Historic District (Phenix City MRA), 11th Ave. at 9th Pl.*

Phenix City, *Lower Twentieth Street Residential Historic District (Phenix City MRA),* 20th St. from 2nd to 6th Aves.

Phenix City, *Morgan-Curtis House (Phenix City MRA),* 1815 Abbott Dr.

Phenix City, *Shapre-Monte House (Phenix City MRA),* 726 6th Ave.

Phenix City, *Smith Residential Historic District (Phenix City MRA),* 20th St., 7th Ave., and 6th Court

Phenix City, *Snow Valley Residential Historic District (Phenix City MRA),* 11th and 12th Sts. at 11th Ave.

Phenix City, *Upper Twentieth Street Residential Historic District (Phenix City MRA),* 1201–1217 W. 20th St.

CONNECTICUT

New Haven County

Naugatuck, *Salem School,* 124 Meadow St.

New Haven, *Cook, John, House,* 35 Elm St.

Seymour, *Seymour High School and Annex,* 100 Bank St.

FLORIDA

Marion County

McIntosh, *McIntosh Historic District,* Roughly bounded by RR Right-of-way, 10th St., Aves. C and H

KENTUCKY

Daviess County

Owensboro, *St. Joseph Church,* 4th and Clay Sts.

Fayette County

Lexington, *North Limestone Commercial District,* N. Limestone St. between Church and 3rd Sts.

Oldham County

Brownsboro vicinity, *Yewell-Snyder House,* 6206 N. Hitt Lane

Shelby County

Shelbyville vicinity, *Allen Dale Farm,* Off US 60

NEW MEXICO

San Miguel County

San Geronimo, *San Geronimo Historic District,* Off NM 283

NEW YORK

Kings County

New York, *Public School 7,* 131–143 York St.

New York County

New York, *Apollo Theater,* 253 W. 125th St.

PENNSYLVANIA

Allegheny County

Pittsburg, *East Carson Street Historic District,* Roughly E. Carson St. from 9th to 24th Sts.

Chester County

Coatesville vicinity, *Bailey, John, Farm (East Fallowfield Township MRA),* Springdell Rd.

Coatesville vicinity, *Brandywine Building and Loan Assoc. Rowhouses (East Fallowfield Township MRA),* Hephzibah Hill Rd.

Coatesville vicinity, *DeHaven, Harry, House (Strasburg Road TR) (East Fallowfield Township MRA),* Strasburg Rd.

Coatesville vicinity, *Dougherty, Edward, House (East Fallowfield Township MRA),* Mt. Carmel Rd.

Coatesville vicinity, *Dougherty, Philip, House (Strasburg Road TR) (East Fallowfield Township MRA),* Strasburg Rd.

Coatesville vicinity, *Dougherty, Phillip, Tavern (Strasburg Road TR) (East Fallowfield Township MRA),* Strasburg Rd.

Coatesville vicinity, *Drovers Inn (Strasburg Road TR) (East Fallowfield Township MRA),* Strasburg Rd.

Coatesville vicinity, *Ercildoun Historic District (East Fallowfield Township MRA)*, PA 82 and SRs T368, 15236, T371, and 182
Coatesville vicinity, *Gladden, Joseph, House (East Fallowfield Township MRA)*, West Chester Rd.
Coatesville vicinity, *Glen Rose Historic District (East Fallowfield Township MRA)*, SRs 15178 and T371
Coatesville vicinity, *Hanna, John, Farm (East Fallowfield Township MRA)*, Fairview Rd.
Coatesville vicinity, *Mortonville Bridge (Strasburg Road TR) (East Fallowfield Township MRA)*, Strasburg Rd.
Coatesville vicinity, *Mortonville Hotel (Strasburg Road TR) (East Fallowfield Township MRA)*, Strasburg Rd.
Coatesville vicinity, *Passmore, Mansel, House (East Fallowfield Township MRA)*, Glen Rose Rd.
Coatesville vicinity, *Pawling, Isaac, House (Strasburg Road TR) (East Fallowfield Township MRA)*, Strasburg Rd.
Coatesville vicinity, *Pennock, Martha, House (East Fallowfield Township MRA)*, PA 82
Coatesville vicinity, *Powell Farm (East Fallowfield Township MRA)*, Dupont Rd.
Coatesville vicinity, *Powell, John, House (East Fallowfield Township MRA)*, Hephzibah Hill Rd.
Coatesville vicinity, *Pusey, Joshua, House (East Fallowfield Township MRA)*, Saw Mill Rd.
Coatesville vicinity, *Scott, David, House (East Fallowfield Township MRA)*, Mt. Carmel Rd.
Coatesville vicinity, *Scott, Thomas, House (East Fallowfield Township MRA)*, Park Ave.
Coatesville vicinity, *Steen, Robert, House (East Fallowfield Township MRA)*, Fairview Rd.
Coatesville vicinity, *Vaughan, Rev. Joshua, House (Strasburg Road TR) (East Fallowfield Township MRA)*, Strasburg Rd.
Coatesville vicinity, *Walton, Asa, House (Strasburg Road TR) (East Fallowfield Township MRA)* Strasburg and Old Wilmington Rds.
Coatesville vicinity, *Wentz, John, House (East Fallowfield Township MRA)*, PA82
Coatesville vicinity, *White Horse Tavern (Strasburg Road TR) (East Fallowfield Township MRA)*, Strasburg Rd.
Coatesville vicinity, *Wilson, Robert, House (Strasburg Road TR) (East Fallowfield Township MRA)*, Strasburg Rd.
Coatesville vicinity, *Young, Robert, House (Strasburg Road TR) (East Fallowfield Township MRA)*, Strasburg Rd.
West Chester, *Buckwalter Building*, 11–13S. High St.

Huntington County

Shirleysburg, *Leas, Benjamin B., House, US 522*

Lancaster County

Lancaster, *Lancaster Trust Company*, 37–41 N. Market St.
Lancaster, *Reilly Brothers and Raub Building*, 44–46 N. Queen St. and 45 N. Market St.

Northumberland County

Sunbury, *Sunbury Historic District*, Roughly bounded by Arch, Chestnut, Front, and 5th Sts.

Philadelphia County

Philadelphia, *Parkside Historic District*, Bounded by Penn-Central RR track, 38th St., Girard, Parkside, and Belmont Aves.

RHODE ISLAND

Kent County

Lambert Farm Site, Meadows Archeological District, Trafalgar Site

Newport County

Jamestown Archeological District, Pine Hill Archeological Site

Providence County

Harrisville, *Harrisville Historic District*, Roughly bounded by Wood and Sherman Rds., East Ave., Main, Chapel, School, and River Sts.
Pawtucket, *Adams, John F., House (Pawtucket MRA)*, 11 Allen Ave.
Pawtucket, *Bridge Mill Power Plant (Pawtucket MRA)*, 25 Roosevelt Ave.
Pawtucket, *Burnham, E.A., House (Pawtucket MRA)*, 17 Nickerson St.
Pawtucket, *Childs-Brown House (Pawtucket MRA)*, 172 Pine St.
Pawtucket, *Collyer Monument (Pawtucket MRA)*, Mineral Spring Park
Pawtucket, *Conant Thread/Coats & Clark Mill Complex District (Pawtucket MRA)*, Roughly bounded by Lonsdale Ave., Pine, Conant, Carpenter, and Rand Sts.
Pawtucket, *Division Street Bridge (Pawtucket MRA)*, Division St. at Seekonk River
Pawtucket, *Fifth Ward Wardroom (Pawtucket MRA)*, 47 Mulberry St.
Pawtucket, *Fire Station No. 4 (Pawtucket MRA)*, 474 Broadway
Pawtucket, *First Ward Wardroom (Pawtucket MRA)*, 171 Fountain St.
Pawtucket, *Foster-Payne House (Pawtucket MRA)*, 25 Belmont St.
Pawtucket, *Fuller Houses (Pawtucket MRA)*, 339–341 and 343–345 Broadway
Pawtucket, *Gilbane's Service Center Building (Pawtucket MRA)*, 175–191 Pawtucket Ave.
Pawtucket, *Kotzow, Louis, House (Pawtucket MRA)*, 641 East Ave.
Pawtucket, *Main Street Bridge (Pawtucket MRA)*, Main St. and Pawtucket Falls
Pawtucket, *Mitchell-Arnold House (Pawtucket MRA)*, 41 Waldo St.
Pawtucket, *Pawtucket Armory (Pawtucket MRA)*, 172 Exchange St.
Pawtucket, *Pawtucket City Hall (Pawtucket MRA)*, 137 Roosevelt Ave.
Pawtucket, *Pawtucket Elks Lodge Building (Pawtucket MRA)*, 27 Exchange St.
Pawtucket, *Pawtucket Times Building (Pawtucket MRA)*, 23 Exchange St.
Pawtucket, *Pawtucket West High School (Pawtucket MRA)*, 485 East Ave.
Pawtucket, *Payne, Charles, House (Pawtucket MRA)*, 25 Brown St.
Pawtucket, *Potter-Collyer House (Pawtucket MRA)*, 67 Cedar St.
Pawtucket, *Quality Hill Historic District (Pawtucket MRA)*, Roughly bounded by I-95, Cottage, Lyon, Bend, and Potter Sts.
Pawtucket, *Riverside Cemetery (Pawtucket MRA)*, 724 Pleasant St.
Pawtucket, *Scholze-Sayles House (Pawtucket MRA)*, 625 East Ave.
Pawtucket, *South Street Historic District (Pawtucket MRA)*, Roughly South Street between Meadow and Fruit Sts.
Pawtucket, *St. John the Baptist Church (Pawtucket MRA)*, 68 Slater St.
Pawtucket, *St. Mary's Church of the Immaculate Conception Complex (Pawtucket MRA)*, 103 Pine St.
Pawtucket, *St. Paul's Church (Pawtucket MRA)*, 50 Park Pl.

Washington County

Bull, Jireh, Blockhouse Historic Site,
Hamilton, *Hamilton Mill Village Historic District*, Boston Neck and Martha Rds., Salisbury and Web Aves.

TENNESSEE

Davidson County

Nashville, *St. Ann's Episcopal Church*, 419 Woodland St.

TEXAS

Bexar County

San Antonio, *St. Anthony Hotel*, 300 E. Travis St.

Dallas County

Dallas, *Winnetka Heights Historic District*, Roughly bounded by Davis and 12th Sts., and Rosemont and Willomet Aves.

Victoria County

Victoria, *Phillips, Judge Alexander H., House*, 705 N. Craig St.

WYOMING

Natrona County

Casper, *Midwest Oil Company Hotel*, 136 E. 6th St.

The 15-day commenting period for the following property is being waived in order to assist the building's preservation through rehabilitation on a new site.

NORTH CAROLINA

Wayne County

Goldsboro, *Weil, Solomon, House*, 205 W. Chestnut St. (Proposed Move)

[FR Doc. 83-28257 Filed 10-14-83; 8:45 am]
BILLING CODE 4310-70-M

INTERNATIONAL TRADE COMMISSION

[Investigation No. 337-TA-137]

Certain Heavy-Duty Staple Gun Tackers; Initial Determination Termination Respondents on the Basis of Settlement Agreement

AGENCY: Interntional Trade Commission.

ACTION: Notice is hereby given that the Commission has received an initial determination from the presiding officer in the above-captioned investigation

terminating the following respondents on the basis of a settlement agreement: Complainant, Arrow Fastener Co., Inc. (Arrow) and respondents Test-Rite Products Corp., Test-Rite International (Taiwan) Ltd., Test-Rite Automotive Ltd., Menard, Inc., Dart Drug Corp., ACO, Inc., Wal-Mart Stores, Inc., Waverly Screw and Hardware, Inc., Pep Boys-Manny, Moe and Jack of California, TSC Industries, Inc., Venture Stores, Inc., The Handyman of California, Inc., Quality Master Co., Ltd., and Upmaster.

SUPPLEMENTARY INFORMATION: This investigation is being conducted pursuant to section 337 of the Tariff Act of 1930 (19 U.S.C. 1337). Under the Commission's rules, the presiding officer's initial determination will become the determination of the Commission thirty (30) days after the date of its service upon the parties, unless the Commission orders review of the intitial determination. The initial determination in this matter was served upon the parties on October 13, 1983.

Copies of the initial determination, the settlement agreement, and all other nonconfidential documents filed in connection with this investigation are available for inspection during official business hours (8:45 a.m. to 5:15 p.m.) in the Office of the Secretary, U.S. International Trade Commission, 701 E Street NW., Washington, D.C. 20436, Telephone 202-523-0161.

Written Comments

Interested persons may file written comments with the Commission concerning termination of the aforementioned respondents. The original and 14 copies of all such comments must be filed with the Secretary to the Commission, 701 E Street, NW., Washington, D.C. 20436, no later than 10 days after publication of this notice in the **Federal Register.** Any person desiring to submit a document (or portion thereof) to the Commission in confidence must request confidential treatment. Such requests should be directed to the Secretary to the Commission and must include a full statement of the reasons why confidential treatment should be granted. The Commission will either accept the submission in confidence or return it.

FOR FURTHER INFORMATION CONTACT: Ruby J. Dionne. Office of the Secretary, U.S. International Trade Commission, Telephone 202-523-0176.

By order of the Commission.

Issued: October 13, 1983.

Kenneth R. Mason,

Secretary.

[FR Doc. 83-28336 Filed 10-17-83; 8:45 am]

BILLING CODE 7020-02-M

INTERSTATE COMMERCE COMMISSION

[Docket No. AB-18 (Sub-49)]

The Chesapeake and Ohio Railway Company—Abandonment in Vinton County, OH; Exemption

The Chesapeake and Ohio Railway Company (applicant) has filed a notice of exemption for an abandonment under 49 CFR 1152 Subpart F—*Exempt Abandonments.* The line to be abandoned is a portion of applicant's Pomeroy Subdivision located in Vinton County, OH, between Station 1043+80, at or near Creola, and Station 1501+21, at or near Dundas, a distance of 8.66 miles.

Applicant has certified (1) that no local or overhead traffic has moved over the line for at least 2 years, and (2) that no formal complaint filed by a user of rail service on the line regarding cessation of service over the line either is pending with the Commission or has been decided in favor of the complainant within the 2-year period. The Public Service Commission (or equivalent agency) in Ohio has been notified in writing at least 10 days prior to the filing of this notice. *See Exemption of Out of Service Rail Lines,* 366 I.C.C. 885 (1983).

As a condition to use of this exemption, and employees affected by the abandonment shall be protected pursuant to *Oregon short Line R. Co.—Abandonment—Goshen,* 360 I.C.C. 91 (1979). The exemption will be effective on November 17, 1983 (unless stayed pending reconsideration). Petitions to stay the effective date of the exemption must be filed by October 28, 1983 and petitions for reconsideration, including environmental, energy and public use concerns, must be filed by November 7, 1983 with: Office of the Secretary, Case Control Branch, Interstate Commerce Commission, Washington, D.C. 20423.

A copy of any petition filed with the Commission should be sent to applicant's representative: Rene J. Gunning, General Attorney, Chessie System Railroads, Suite 2204, 100 North Charles Street, Baltimore, MD 21201, (301) 237-3813.

If the notice of exemption contains false or misleading information, the use of the exemption is void *ab initio.*

A notice to the parties will be issued if use of the exemption is conditioned upon environmental or public use conditions.

Decided:

By the Commission, Heber P. Hardy, Director, Office of Proceedings.

Agatha L. Mergenovich,

Secretary.

[FR Doc. 83-28455 Filed 10-17-83; 8:45 am]

BILLING CODE 7035-01-M

DEPARTMENT OF LABOR

Employment and Training Administration

Determinations Regarding Eligibility to Apply for Worker Adjustment Assistance

In accordance with Section 223 of the Trade Act of 1974 (19 U.S.C. 2273) the Department of Labor herein presents summaries of determinations regarding eligibility to apply for adjustment assistance issued during the period October 3, 1983–October 7, 1983.

In order for an affirmative determination to be made and a certification of eligibility to apply for adjustment assistance to be issued, each of the group eligibility requirements of Section 222 of the Act must be met.

(1) That a significant number or proportion of the workers in the workers' firm, or an appropriate subdivision thereof, have become totally or partially separated,

(2) That sales or production, or both, of the firm or subdivision have decreased absolutely, and

(3) That increases of imports of articles like or directly competitive with articles produced by the firm or appropriate subdivision have contributed importantly to the separations, or threat thereof, and to the absolute decline in sales or production.

Negative Determinations

In each of the following cases the investigation revealed that criterion (3) has not been met. A survey of customers indicated that increased imports did not contribute importantly to worker separations at the firm.

TA-W-14,392; J. Shoeneman Co., Winchester, VA

TA-W-14,469; Pro Corp., Florence, MA

TA-W-14,573; Union Electric Steel Corp., Burgettstown, PA

TA-W-14,444; Tygart Industries; Inc., Versailles Boro & McKeesport, PA

TA-W-14,574; Distillers Co., Limited, Linden, NJ

In the following case the investigation revealed that criterion (3) has not been met. Increased imports did not contribute importantly to workers separations at the firm.

TA-W-14,540; The American Ship Building Co., Amship Div., Lorain, OH Shipyard

TA-W-14,602; Eastern Knitting Mills, Blenheim, NJ

TA-W-14,526; Brown Shoe Co., Potosi, MO

In the following cases the investigation revealed that criterion (3) has not been met for the reasons specified.

TA-W-14,765; Tony's Branch Coal Co., Bloomingrose, WV

Aggregate U.S. imports of metallurgical coal are negilgible.

TA-W-14,776; Island Creek Coal Co., VP #2 Mine, Buchanan County, VA

Aggregate U.S. imports of metallurgical coal are negligible.

TA-W-14,779; Island Creek Coal Co., VP #5 Mine, Buchanan County, VA

Aggregate U.S. imports of metallurgical coal are negligible.

TA-W-14,780; Island Creek Coal Co., VP #6 Mine, Buchanan County, VA

Aggregate U.S. imports of metallurgical coal are negligible.

TA-W-14,775; Island Creek Coal Co., VP #1 Mine, Buchanan County, VA

Aggregate U.S. imports of metallurgical coal & coke did not increase as required for certification.

TA-W-14,777; Island Creek Coal Co., VP #3 Mine, Buchanan County, VA

Aggregate U.S. imports of metallurgical coal & coke did not increase as required for certification.

TA-W-14,778; Island Creek Coal Co., VP #4 Mine, Buchanan County, VA

Aggregate U.S. imports of metallurgical coal & coke did not increase as required for certification.

TA-W-14,800; Shenango, Inc., Neville Island Foundry, Neville Island, PA

Aggregate U.S. imports of ingot molds are negligible.

TA-W-14,801; Shenango, Inc., Coke & Iron Div., Neville Island, PA

Aggregate U.S. imports of ingot molds are negligible.

TA-W-14,802; Shenango, Inc., Sharpsville Foundry, Sharpsville, PA

Aggregate U.S. imports of ingot molds are negligible.

TA-W-14,761; Fox Creek Mining Co., Danville, WV

Aggregate U.S. imports of metallurgical coal did not increase as required for certification.

TA-W-14,531; Maryland Shipbuilding & Drydock Co., Baltimore, MD

The workers' firm does not produce an article as required for certification under section 222 of the Trade Act of 1974.

Affirmative Determinations

TA-W-14,528; Ingersoll-Rand Co., Proto Hand Tool Div., Jamestown, NY

A certification was issued covering all workers separated on or after March 1, 1982.

TA-W-14,612; Wright & McGill Co., Denver, CO

A certification was issued covering all workers separated on or after April 20, 1982 and before August 15, 1983.

TA-W-14,613; Wright & McGill Co., Aurora, CO

A certification was issued covering all workers separated on or after April 20, 1982 and before August 15, 1983.

TA-W-14,605; Del Truck Equipment, Inc., Buffalo, NY

A certification was issued covering all workers separated on or after April 19, 1982 and before June 18, 1982.

TA-W-14,614; Canon Coal Co., Clarksville, PA

A certification was issued covering all workers separated on or after April 20, 1982 and before July 1, 1982.

TA-W-14,713; Johnson Controls, Inc., Systems & Service Div., Dallas Facility, Carrollton, TX

A certification was issued covering all workers separated on or after October 1, 1982 and before March 1, 1983.

TA-W-14,752; Hibbing Taconite Co., Hibbing MN

A certification was issued covering all workers separated on or after June 6, 1982.

TA-W-14,511; Aluminum Co. of America, Mobile, AL

A certification was issued covering all workers separated on or after March 16, 1982.

TA-W-14,207; Wellco Enterprises, Inc., Hazelwood, NC

A certification was issued covering all workers excluding those producing boots separated on or after December 31, 1981.

TA-W-14,213; MO-KA Shoe Corp., Aguadilla, PR

A certification was issued covering all workers excluding those producing boots separated on or after December 31, 1981.

TA-W-14,466; The Bradford Plant, Corning Glass Works, Bradford, PA

A certification was issued covering all workers of the Bradford plant, Corning Glass Works, Bradford, Pennsylvania engaged in employment related to the production of resistors who became totally or partially separated from employment on or after February 15, 1982; and all workers engaged in employment related to the production of networks who became totally or partially separated from employment on or after September 1, 1982 and before January 31, 1983.

I hereby certify that the aforementioned determinations were issued during the period October 3, 1983–October 7, 1983. Copies of these determinations are available for inspection in Room 9120, U.S. Department of Labor, 601 D Street, NW., Washington, D.C. 20213 during normal business hours or will be mailed to persons who write to the above address.

Dated: October 11, 1983.

Marvin M. Fooks,

Director, Office of Trade Adjustment Assistance.

[FR Doc. 83-28344 Filed 10-17-83; 8:45 am]

BILLING CODE 4510-30-M

Pension and Welfare Benefit Programs

[Prohibited Transaction Exemption 83-170; Exemption Application No. L-3877]

Exemption From the Prohibitions for Certain Transactions Involving Central States, Southeast and Southwest Areas Health and Welfare Fund (the Fund) Located in Chicago, Illinois

AGENCY: Pension and Welfare Benefit Programs, Labor.

ACTION: Grant of individual exemption.

SUMMARY: This exemption permits the purchase by the Fund of certain assets from Amalgamated Insurance Agency Services, Inc. (Amalgamated) and certain related companies, all of which are parties in interest with respect to the Fund. The assets to be acquired, which it is represented are necessary for the Fund to process claims for benefits, are to be specifically determined and valued pursuant to the terms of an Agreed Order dated February 1, 1983, entered in *Donovan* v. *Robbins, et al.*, No. 78 C 4075, and *Donovan* v. *Dorfman, et al.*, No. 82 C 7951, both filed in the United States District Court for the Northern District of Illinois (Eastern Division).

FOR FURTHER INFORMATION CONTACT: Mrs. Miriam Freund, of the Office of Fiduciary Standards, Pension and Welfare Benefit Programs, Room C-4526, U.S. Department of Labor, 200 Constitution Avenue, N.W., Washington, D.C. 20216, (202) 523-8971. (This is not a toll-free number.)

SUPPLEMENTARY INFORMATION: On August 19, 1983, notice was published in the **Federal Register** (48 FR 37746) of the pendency before the Department of Labor (the Department) of a proposal to grant an exemption from the restrictions of section 406(a) of the Employee Retirement Income Security Act of 1974 (the Act) for the transaction mentioned above, which was described in an application filed on behalf of the Fund and its board of trustees. The notice set forth a summary of facts and representations contained in the application for exemption and referred interested persons to the application for a complete statement of the facts and representations. The application has been available for public inspection at the Department in Washington, D.C. The notice also invited interested persons to submit comments on the requested exemption to the Department. The applicant has represented that a copy of the notice has been furnished to interested persons in compliance with the provisions of the notice of proposed exemption. No public comments were received by the Department.

Limited Scope of Exemption: The Department is granting an exemption solely for the transfer of assets described above and more fully explained in the notice of proposed exemption. No exemptive relief is being provided for any other transaction, arrangement, agreement or element thereof.

General Information

The attention of interested persons is directed to the following:

(1) The fact that a transaction is the subject of an exemption granted under section 408(a) of the Act does not relieve a fiduciary or other party in interest with respect to a plan to which the exemption is applicable from certain other provisions of the Act. These provisions include any prohibited transaction provisions to which the exemption does not apply and the general fiduciary responsibility provisions of section 404 of the Act, which among other things require a fiduciary to discharge his or her duties respecting the plan solely in the interest of the participants and beneficiaries of the plan and in a prudent fashion in accordance with section 404(a)(1)(B) of the Act.

(2) This exemption does not extend to transactions prohibited under section 406(b) of the Act.

(3) This exemption is supplemental to, and not in derogation of, any other provisions of the Act, including statutory or administrative exemptions and transitional rules. Furthermore, the fact that a transaction is subject to an administrative or statutory exemption or trainsitional rule is not dispositive or whether the transaction is, in fact, a prohibited transaction.

Exemption

In accordance with section 408(a) of the Act and the procedures set forth in ERISA Procedure 75-1 (40 FR 18471, April 28, 1975), and based upon the entire record, the Department makes the following determinations:

(a) The exemption is administratively feasible;

(b) It is in the interests of the Fund and of its participants and beneficiaries; and

(c) It is protective of the rights of the participants and beneficiaries of the Fund.

Accordingly, the restrictions of section 406(a) of the Act shall not apply to the purchase by the Fund of assets it needs to process claims in-house from Amalgamated and certain related companies pursuant to the terms of the Agreed Order dated February 1, 1983, described in the notice of proposed exemption.

The availability of this exemption is subject to the express condition that the material facts and representations contained in the application are true and complete, and that the application accurately describes all material terms of the transaction to be consummated pursuant to this exemption.

Signed at Washington, D.C., this 11th day of October, 1983.

Alan D. Lebowitz,

Assistant Administrator for Fiduciary Standards, Pension and Welfare Benefit Programs, Labor-Management Services Administration, Department of Labor.

[FR Doc. 83-28347 Filed 10-17-83; 8:45 am]

BILLING CODE 4510-29-M

NATIONAL FOUNDATION ON THE ARTS AND THE HUMANITIES

National Council on the Arts; Meeting

Pursuant to Section 10(a)(2) of the Federal Advisory Committee Act (Pub. L. 92-463), notice is hereby given that a meeting of the National Council on the Arts will be held on Thursday, November 3, 1983, from 2:00-5:30 p.m.; on Friday, November 4, from 9:00 a.m.-5:30 p.m.; and on Saturday, November 5, from 9:00 a.m.-5:30 p.m. in room M-04 of the Nancy Hanks Center, 1100 Pennsylvania Avenue, NW., Washington, D.C.

A portion of this meeting will be open to the public on Thursday, November 3, from 2:00-5:30 p.m.; Friday, November 4, from 9:00 a.m.-5:30 p.m. and on Saturday, November 5, from 9:00 a.m.-noon. Topics for discussion will include Program Review and Guidelines for the Dance, Inter-Arts, Visual Arts, Design Arts, Music Presenters/Festival, Theater Ongoing Ensembles and Locals Pilot Programs. Other topics for discussion will be Arts in Education and the Endowment Five-Year Plan.

The remaining session of this meeting on Saturday, November 5, from 1:30-5:30 p.m. is for the purpose of Council review, discussion, evaluation, and recommendation on applications for financial assistance under the National Foundation on the Arts and the Humanities Act of 1965, as amended, including discussion of information given in confidence to the agency by grant applicants. In accordance with the determination of the Chairman published in the **Federal Register** of February 13, 1980, these sessions will be closed to the public pursuant to subsections (c) (4), (6) and 9(b) of section 552b of Title 5, United States Code.

Further information with reference to this meeting can be obtained from Mr. John H. Clark, Advisory Committee Management Officer, National Endowment for the Arts, Washington, D.C. 20506, or call (202) 682-5433.

Dated: October 12, 1983.

John H. Clark,

Director, Office of Council and Panel Operations, National Endowment for the Arts.

[FR Doc. 83-28247 Filed 10-17-83; 8:45 am]

BILLING CODE 7537-01-M

Federal Council on the Arts and the Humanities, Arts and Artifacts Indemnity Panel Advisory Committee; Meeting

Pursuant to the provisions of the Federal Advisory Committee Act (Pub. L. 92-463, as amended), notice is hereby given that a meeting of the Arts and Artifacts Indemnity Panel of the Federal Council on the Arts and the Humanities will be held at the Old Post Office Building, 1100 Pennsylvania Aveue, NW., Washington, D.C. from 9:30 a.m. to 5:00 p.m. on November 30, 1983 in Room 715.

The purpose of the meeting is to review applications for Certificates of Indemnity submitted to the Federal Council on the Arts and the Humanities for exhibitions beginning after.

Because the proposed meeting will consider commercial and financial data and because it is important to keep

values of objects, methods of transportation and security measures confidential, pursuant to authority to Close Advisory Committee Meetings, dated April 16, 1978, I have determined that the meeting would fall within exemptions (4) and (9) of 5 U.S.C. 552 (b)(c) and that it is essential to close the meeting to protect the free exchange of internal views and to avoid interference with operation of the Committee.

It is suggested that those desiring more specific information contact the Advisory Committee Management Officer, Mr. Stephen J. McCleary, National Endowment for the Humanities, Washington, D.C. 20506.

Stephen J. McCleary,

Advisory Committee, Management Officer.

[FR Doc. 28351 Filed 10-17-83; 8:45 am]

BILLING CODE 7536-01-M

Listing of Programs and Activities; Clarification

Clarification of Programs and Activities Subject to Title 45, Code of Federal Regulations Part 1152 entitled, "Intergovernmental Review of National Endowment for the Arts Programs and Activities."

Notice is hereby given that the listing of programs and activities covered by E. O. 12372 and published by Notice in the **Federal Register** on June 24, 1983 (48 FR 29354) is clarified as follows:

To Artists In Education add "(Artist Residency Grants)."

Further information with reference to the above program clarification can be obtained from Susan Liberman, Assistant General Counsel, National Endowment for the Arts, Washington, D.C. 20506 or call (202) 682-5418.

Dated: October 11, 1983.

Jeffrey Mandell,

General Counsel National Endowment for the Arts.

[FR Doc. 83-28331 Filed 10-17-83; 8:45 am]

BILLING CODE 7537-01-M

PENSION BENEFIT GUARANTY CORPORATION

Exemption From Bond/Escrow Requirement Relating to Sale of Assets by an Employer That Contributes to a Multiemployer Plan; Libby, McNeill & Libby, Inc. (Stayton Canning Co.)

AGENCY: Pension Benefit Guaranty Corporation.

ACTION: Notice of exemption.

SUMMARY: The Pension Benefit Guaranty Corporation has, on the basis of a request from Libby, McNeill & Libby granted an exemption from the bond/escrow requirement of section 4204(a)(1)(B) of the Employee Retirement Income Security Act of 1974, as amended. A notice of the request for exemption from this requirement was published on July 6, 1983 (48 FR 31127). The effect of this notice is to advise the public of the decision on the exemption request.

ADDRESS: The request for an exemption and the PBGC response to the request are available for public inspection at the PBGC Public Affairs Office, Suite 7100, 2020 K Street, NW., Washington, D.C. 20006, between the hours of 9:00 a.m. and 4:00 p.m. A copy of these documents may be obtained by mail from the PBGC Disclosure Officer (160) at the above address.

FOR FURTHER INFORMATION CONTACT: James M. Graham, Attorney, Corporate Planning and Program Development Department, Pension benefit Guaranty Corporation, 2020 K Street, NW., Washington, D.C. 20006; (202) 254-4862.

SUPPLEMENTARY INFORMATION:

Background

Section 4204(a)(1) of the Employee Retirement Income Security Act of 1974, as amended ("ERISA"), 29 U.S.C. 1384, provides that the sale of assets of an employer that contributes to a multiemployer pension plan will not constitute a complete or partial withdrawal from the plan if certain conditions are met. One of these conditions is that the purchaser post a bond or deposit money in escrow for five plan years after the sale.

Section 4204(c) of ERISA authorizes the Pension Benefit Guaranty Corporation ("PBGC") to grant individual or class variances or exemptions from the purchaser's bond/escrow requirement of section 4204(a)(1)(B). Under § 2643.3(a) of the PBGC's regulation on procedures for variances for sales of assets (29 CFR Part 2643), the PBGC shall approve a request for a variance or exemption if it determines that approval of the request is warranted, in that it—

(1) Would more effective or equitably carry out the purpose of Title IV of the Act; and

(2) Would not significantly increase the risk of financial loss to the plan.

The legislative history of section 4204 indicates a Congressional intent that the sales rules be administered in a manner that assures protection of the plan with the least practicable intrusion into normal business transactions.

ERISA section 4204(c) and § 2643.3(b) of the regulation require the PBGC to publish a notice of the pendency of a request for a variance or an exemption in the **Federal Register**, and to provide interested parties with an opportunity to comment on the proposed variance or exemption.

Decision

On July 6, 1983 (48 FR 31127), the PBGC published a notice of the pendency of a request from Libby, McNeill & Libby ("Libby") for an exemption from the requirement of ERISA section 4204(a)(1)(B), in connection with a sale of certain assets by Libby to Stayton Canning Company ("Stayton") that was effective on November 5, 1982.

In connection with this sale, Stayton has assumed the responsibilities of Libby under a collective bargaining agreement with the Western Conference of Teamsters, Local 670.

The following chart lists the two multiemployer plans for which an exemption is requested, the estimated amount of Libby's withdrawal liability and the estimated amount of the bond/escrow that would be required under ERISA section 4204(a)(1)(B) with respect to each such plan:

Plan	Estimate of seller's liability	Amount of bond/escrow
Western Conference of Teamsters Pension Trust Fund ("Western Conference Plan")	$149,160	$56,327
Oregon Processors Seasonal Employees Pension Trust Fund ("Oregon Processors Plan")	18,477	6,952
Total	167,637	63,279

The amount of the bond to each plan represents the average annual contribution that Libby made to the affected plan for the three plan years preceding the plan year in with the sale occurred.

In accordance with PBGC's regulation (29 CFR § 2643.2(d)(7)), a copy of Stayton's audited financial statements for the three fiscal years preceding the sale was submitted as part of the applicaton. However, Stayton has asserted that the financial information is exempt from disclosure under the Freedom of Information Act (5 U.S.C. 552(b)(4)) and the PBGC regulation (29 CFR 2603.18). Stayton has indicated its intention that ERISA section 4204 should apply to the sale.

Libby asserted that this request should be granted on a *de minimis* basis. Based on information provided by the plans, the average annual contributions made by all employers to the Western Conference Plan and

Oregon Processors Plan for the three plan years preceeding the plan year in which the sale occured were $460 million and $546,000, respectively. Thus, the amount of the bond/escrow is with respect to each plan a very small fraction of the total amount of employer contributions (.012% for the Western Conference Plan, and 1.3% for the Oregon Processors Plan). When the notice of pendency for this request was published, PBGC indicated that it was considering granting the request for an exemption on a *de minimis* basis. No comments were received in response to the notice.

PBGC believes that when, as in this request, the amount of the bond/escrow is very small in comparison to the total annual contributions to a plan, an exemption from the bond/escrow requirement would not significantly increase the risk of financial loss to the plan. *Heinemann's Inc., et al.* 48 FR 29638, June 27, 1983.

Therefore, based on the facts of this case and the representations and statements made in connection with the request for exemption, PBGC has determined that this request is *de minimis* in nature and thus an exemption from the bond/escrow requirement is warranted, in that it would more effectively carry out the purpose of Title IV of ERISA and would not significantly increase the risk of financial loss to the fund. Accordingly, PBGC hereby grants the request by Libby for an exemption from the bond/escrow requirement. The granting of an exemption or variance from the bond/escrow requirement of section 4204(a)(1)(B) does not constitute a finding by PBGC that the transaction satisfies the other requirements of section 4204(a)(1). The determination of whether the transaction satisfies such other requirements is a determination to be made by the plan sponsor.

Issued at Washington, D.C. on this 12th day of October, 1983.

Edwin M. Jones,

Executive Director, Pension Benefit Guaranty Corporation.

[FR Doc. 28280 Filed 10-17-83; 8:45 am]

BILLING CODE 7708-01-M

Pendency of Request for Exemption From Bond/Escrow Requirement Relating to Sale of Assets by an Employer That Contributes to a Multiemployer Plan; U.S. Steel Mining Co., Inc.

AGENCY: Pension Benefit Guaranty Corporation.

ACTION: Notice of pendency of request.

SUMMARY: This notice advises interested persons that the Pension Benefit Guaranty Corporation has received a request from U.S. Steel Mining Co., Inc. for an exemption from the bond/escrow requirement of section 4204(a)(1)(B) of the Employee Retirement Income Security Act of 1974, as amended. Section 4204(a)(1) provides that the sale of assets by an employer that contributes to a multiemployer pension plan will not constitute a complete or partial withdrawal from the plan if certain conditions are met. One of these conditions is that the purchaser post a bond or deposit money in escrow for five plan years beginning after the sale. The PBGC is authorized to grant exemptions from this requirement. Prior to granting an exemption, the PBGC is required to give interested persons an opportunity to comment on the exemption request. The effect of this notice is to advise interested persons of this exemption request and to solicit their views on it.

DATES: Comments must be submitted on or before December 2, 1983.

ADDRESSES: All written comments (at least three copies) should be addressed to: Assistant Executive Director for Policy and Planning (140), Pension Benefit Guaranty Corporation, 2020 K Street, NW., Washington, D.C. 20006. The request for exemption and the comments received will be available for public inspection at the PBGC Public Affairs Office, Suite 7100, at the above address, between the hours of 9:00 a.m. and 4:00 p.m.

FOR FURTHER INFORMATION CONTACT: James M. Graham, Office of the Executive Director, Policy and Planning (140), Pension Benefit Guaranty Corporation, 2020 K Street, NW., Washington, D.C. 20006; (202) 254-4862. [This is not a toll-free number.]

SUPPLEMENTARY INFORMATION:

Background

Section 4204(a)(1) of the Employee Retirement Income Security Act of 1974, as amended ("ERISA"), 29 U.S.C. 1384, provides that a bona fide arm's-length sale of assets of a contributing employer to an unrelated party will not be considered a withdrawal if three conditions are met. These conditions, enumerated in section 4204(a)(1) (A)-(C), are that—

(A) The purchaser has an obligation to contribute to the plan for substantially the same number of contribution base units for which the seller was obligated to contribute;

(B) The purchaser obtains a bond or places an amount in escrow, for a period of five plan years after the sale, in an amount equal to the greater of the seller's average required annual contribution to the plan for the three plan years preceding the year in which the sale occurred or the seller's required annual contribution for the plan year preceding the year in which the sale occurred; and

(C) The contract of sale provides that if the purchaser withdraws from the plan within the first five plan years beginning after the sale and fails to pay any of its liability to the plan, the seller shall be secondarily liable for the liability it (the seller) would have had but for section 4204.

The bond or escrow described above would be paid to the plan if the purchaser withdraws from the plan or fails to make any required contributions to the plan within the first five plan years beginning after the sale. Under ERISA section 4204(b)(2), the amount of the bond or escrow is doubled if the plan is in reorganization in the plan year in which the sale of assets occurs.

ERISA section 4204(c) authorizes the Pension Benefit Guaranty Corporation ("PBGC") to grant individual or class variances or exemptions from the purchaser's bond/escrow requirement of section 4204(a)(1)(B) and the contract-provision requirement of section 4204(a)(1)(C). The legislative history of section 4204 indicates a Congressional intent that the sales rules be administered in a manner that assures protection of the plan with the least practicable intrusion into normal business transactions. The granting of an exemption or variance from the requirements of section 4204(a)(1) (B) or (C) does not constitute a finding by PBGC that the transaction satisfies the other requirements of section 4204(a)(1).

Under PBGC's regulation on procedures for variances for sales of assets (29 CFR 2643.3(a)), the PBGC shall approve a request for a variance or exemption if it determines that approval of the request is warranted, in that it—

(1) Would more effectively or equitably carry out the purposes of Title IV of the Act; and

(2) Would not signficantly increase the risk of financial loss to the plan.

Section 4204(c) of ERISA and § 2643.3(b) of the regulation require the PBGC to publish a notice of the pendency of a request for a variance or exemption in the **Federal Register**, and to provide interested parties with an opportunity to comment on the proposed variance or exemption.

The Request

The PBGC has received a request from U.S. Steel Mining Co., Inc. ("Steel Mining") to waive the bond/escrow requirement of ERISA section 4204(a)(1)(B). Steel Mining is a wholly-owned subsidiary of the United States Steel Corporation ("U.S. Steel"). In the request, Steel Mining represents among other things, that:

1. Effective June 12, 1982, Steel Mining purchased and leased certain assets of the Carbon Fuel Company ("Carbon Fuel"), a subsidiary of Carbon Industries, Inc., which in turn is a subsidiary of International Telephone and Telegraph Corporation.

2. In connection with this sale, Steel Mining has assumed the responsibilities of Carbon Fuel under a collective bargaining agreement known as the National Bituminous Coal Wage Agreement of 1981, with the United Mine Workers of America.

3. The following chart lists the two multiemployer plans for which an exemption is requested, the estimated amount of Carbon Fuel's and Steel Mining's withdrawal liability (excluding the liability attributable to the purchased operations from Carbon Fuel), and the estimated amount of the bond/escrow that would be required under ERISA section 4204(a)(1)(B) with respect to each such plan:

Plan	Estimate of seller's liability	Estimate of purchaser's liability	Amount bond/escrow
1950 UMW Pension Plan ("1950 Plan")	$7,162,562	$79,628,000	[1] $3,416,384
1974 UMW Pension Plan ("1974 Plan")	11,764,823	83,005,000	[2] 2,026,216
Total	18,927,385	162,633,000	5,442,600

[1] The amount is based upon the average annual contribution that Carbon Fuel made to the 1950 Plan for the three plan years preceding the plan year in which the sale occurred.

[2] The amount represents the annual contribution required to be made by Carbon Fuel to the 1974 Plan for plan year 1981.

PBGC notes that, since the 1950 Plan was in reorganization for the Plan year beginning July 1, 1981 (the plan year in which the sale occurred), the amount of the bond/escrow noted in the above table has been doubled to comply with ERISA section 4204(b)(2).

4. In the purchase agreement, Carbon Fuel agreed that, if the purchaser withdraws within the five year period commencing with the first plan year beginning after the date of the sale and fails to pay withdrawal liability, it would be secondarily liable for any withdrawal liability Carbon Fuel would have had to the plan but for the operation of ERISA section 4204.

5. According to its audited consolidated financial statements, U.S. Steel and its subsidiaries had total net assets for its fiscal year ended December 31, 1981 of approximately $6.3 billion. U.S. Steel reported net income after taxes of approximately $1.1 billion and $505 million respectively for its fiscal years 1981 and 1980, and a net loss after taxes of $293 million for fiscal year 1979.

6. Steel Mining has sent a copy of this request to the plans and the collective bargaining representative of Carbon Fuel's former employees by certified mail, return receipt requested.

ERISA section 4211(d)(2) provides that section 4204 shall not apply with respect to the withdrawal of an employer from a plan to which section 404(c) of the Internal Revenue Code applies, or to a continuation of such a plan, unless the plan is amended to provide that that section shall apply. This provision includes the 1950 Plan and the 1974 Plan. Both plans have adopted amendments, which include the text of section 4204 (a) and (b), although slightly modified, but not section 4204(c) (relating to PBGC's authority to grant an exemption from the bond/escrow requirement of section 4204(a)(1)(B)) or section 4204(d) (relating to the definition of "unrelated party"). However, PBGC finds that subsections 4204 (c) and (d) apply as a matter of law, and thus it is unnecessary for the plans to include those subsections in the plan amendment in order to give effect to those provisions. Therefore, PBGC will consider this request pursuant to its authority under section 4204(c).

Comments

All interested persons are invited to submit written comments on the pending exemption to the above address, by December 2, 1983. All comments will be made a part of the record. Comments received, as well as the application for exemption, will be available for public inspection at the address set forth above.

Issued at Washington, D.C. on this 12th day of October, 1983.

Edwin M. Jones,

Executive Director, Pension Benefit Guaranty Corporation.

[FR Doc. 83-28281 Filed 10-17-83; 8:45 am]

BILLING CODE 7708-01-M

DEPARTMENT OF TRANSPORTATION

Office of the Secretary

Minority Business Resource Center Advisory Committee; Meeting

Pursuant to section 10(a)(2) of the Federal Advisory Committee Act (Pub. L. 92-463; 5 U.S.C. App. 1), notice is hereby given of a meeting of the Minority Business Resource Center Advisory Committee to be held November 21, 1983, at 5:30 p.m. in the Cathedral Hill Room B at the Cathedral Hill Hotel, 1101 Van Ness Street, San Francisco, California 94109. The agenda for the meeting is as follows:

—Surface Transportation Assistance Act of 1982 (MBE) Goals

—Year-end report on MBRC programs

Attendance is open to the interested public but limited to the space available. With the approval of the Chairman, members of the public may present oral statements at the meeting. Persons wishing to attend and persons wishing to present oral statements should notify the Minority Business Resource Center not later than the day before the meeting. Information pertaining to the meeting may be obtained from Ms. Betty Chandler, Minority Business Resource Center, 400 7th Street SW., Washington, D.C. 20590, telephone (202) 426-2852. Any member of the public may present a written statement to the Committee at any time.

Issued in Washington, D.C., on October 12, 1983.

Melvin Humphrey,

Director, Office of Small and Disadvantaged Business Utilization.

[FR Doc. 83-28284 Filed 10-17-83; 8:45 am]

BILLING CODE 4910-62-M

Federal Aviation Administration

General Aviation District Office at Baton Rouge, Louisiana; Opening

Notice is hereby given that on or about November 1, 1983, the General Aviation District Office at Baton Rouge, Louisiana, will be opened. This office will now provide all services to the public formerly provided by the General Aviation District Offices at Shreveport and New Orleans, Louisiana, and the New Orleans satellite office at Lafayette, Louisiana. This information will be reflected in the FAA Organization Statement the next time it is reissued.

(Sec. 313(a), 72 Stat. 752 49 U.S.C. 1354)

Issued in Fort Worth, Texas, on August 3, 1983.

C. R. Melugin, Jr.,

Director, Southwest Region.

[FR Doc. 83-28297 Filed 10-17-83; 8:45 am]

BILLING CODE 4910-13-M

General Aviation District Office at Fort Worth, Texas; Closing

Notice is hereby given that on or about October 15, 1983, the General Aviation District Office at Fort Worth, Texas, will be closed. All services to the public formerly provided by this office will be provided by the General Aviation District Offices at Dallas, Lubbock, and San Antonio, Texas. This information will be reflected in the FAA Organization Statement the next time it is reissued.

(Sec. 313(a), 72 Stat. 752; 49 U.S.C. 1354)

Issued in Fort Worth, Texas, on August 3, 1983.

C. R. Melugin, Jr.,

Director, Southwest Region.

[FR Doc. 83-28298 Filed 10-17-83; 8:45 am]

BILLING CODE 4910-13-M

General Aviation District Office at New Orleans, Louisiana, and its Satellite Office at Lafayette, Louisiana; Closing

Notice is hereby given that on or about November 1, 1983, the General Aviation District Office at New Orleans, Louisiana, and the New Orleans satellite office at Lafayette, Louisiana, will be closed. All services to the public formerly provided by these offices will be provided by the General Aviation District Office to be opened at Baton Rouge, Louisiana. This information will be reflected in the FAA Organization Statement the next time it is reissued.

(Sec. 313(a), 72 Stat. 752 49 U.S.C. 1354.)

Issued in Fort Worth, Texas, on August 3, 1983.

C. R. Melugin, Jr.,

Director, Southwest Region.

[FR Doc. 83-28300 Filed 10-17-83; 8:45 am]

BILLING CODE 4910-13-M

General Aviation District Office at Shreveport, Louisiana; Closing

Notice is hereby given that on or about November 1, 1983, the General Aviation District Office at Shreveport, Louisiana, will be closed. All services to the public formerly provided by this office will be provided by the General Aviation District Office to be opened at Baton Rouge, Louisiana, and the General Aviation District Office at Dallas, Texas. This information will be reflected in the FAA Organization Statement the next time it is reissued.

(Sec. 313(a), 72 Stat. 752 49 U.S.C. 1354)

Issued in Fort Worth, Texas, on August 3, 1983.

C. R. Melugin, Jr.,

Director, Southwest Region.

[FR Doc. 83-28299 Filed 10-17-83; 8:45 am]

BILLING CODE 4910-13-M

Flight Standards District Office at Tulsa, Oklahoma; Closing

Notice is hereby given that on or about September 15, 1983, the Flight Standards District Office at Tulsa, Oklahoma, was closed. All services to the public formerly provided by this office will be provided by the General Aviation District Office at Oklahoma City, Oklahoma, and the Air Carrier District Office at Dallas/Fort Worth Airport, Texas. This information will be reflected in the FAA Organization Statement the next time it is reissued.

(Sec. 313(a), 72 Stat. 752 49 U.S.C. 1354.)

Issued in Fort Worth, Texas, on August 3, 1983.

C. R. Melugin, Jr.,

Director, Southwest Region.

[FR Doc. 83-28301 Filed 10-17-83; 8:45 am]

BILLING CODE 4910-13-M

National Airspace Review; Meeting

AGENCY: Federal Aviation Administration, DOT.

ACTION: Notice of meeting.

SUMMARY: Pursuant to Section 10(a)(2) of the Federal Advisory Committee Act (P.L. 92-463; 5 U.S.C. App. 1) notice is hereby given of a meeting of Task Group 3-1 of the Federal Aviation Administration (FAA) National Airspace Review Advisory Committee. The agenda for this meeting is as follows: A study of requirements and composition of flight plans for commonality and possible combination in a simple, uniform format.

DATE: Beginning November 14, 1983, at 11 a.m., continuing daily, except Saturdays, Sundays, and holidays, not to exceed one week.

ADDRESS: The meeting will be held at the Federal Aviation Administration, conference room 7 A/B, 800 Independence Avenue, S.W., Washington, D.C.

FOR FURTHER INFORMATION CONTACT: National Airspace Review Program Management Staff, Room 1005, Federal Aviation Administration, 800 Independence Avenue, S.W., Washington, D.C. 20591, (202) 426-3560.

Attendance is open to the interested public, but limited to the space available. To insure consideration, persons desiring to make statements at the meeting should submit them in writing to the Executive Director, National Airspace Review Advisory Committee, Air Traffic Service, AAT-1, 800 Independence Avenue, S.W. Washington, D.C. 20591, by November 7, 1983. Time permitting and subject to the approval of the chairman, these individuals may make oral presentations of their previously submitted statements.

Issue in Washington, D.C. on October 12, 1983.

John Watterson,

Acting Manager, Special Projects Staff Air Traffic Service.

[FR Doc. 83-28302 Filed 10-17-83; 8:45 am]

BILLING CODE 4910-13-M

Air Carrier District Office at Houston, Tex; Closing

Notice is hereby given that on or about October 1, 1983, the Air Carrier District Office at Houston, Texas, was closed. All services to the public formerly provided by this office will be provided by the Air Carrier District Office at Dallas/Fort Worth Airport, Texas. This information will be reflected in the FAA Organization Statement the next time it is reissued.

(Sec. 313(a), 72 Stat. 752, 49 U.S.C. 1354)

Issued in Fort Worth, Texas, on August 3, 1983.

C. R. Melugin, Jr.,

Director, Southwest Region.

[FR Doc. 83-28303 Filed 10-17-83; 8:45 am]

BILLING CODE 4910-13-M

DEPARTMENT OF THE TREASURY

Office of the Secretary

[Dept. Circular; Public Debt Series No. 31-83]

Treasury Notes of October 31, 1985; Series Z-1985

October 13, 1983.

1. Invitation for Tenders

1.1. The Secretary of the Treasury, under the authority of Chapter 31 of Title 31, United States Code, invites tenders for approximately $8,000,000,000 of United States securities, designated Treasury Notes of October 31, 1985, Series Z-1985 (CUSIP No. 912827 QB 1). The securities will be sold at auction, with bidding on the basis of yield. Payment will be required at the price

equivalent of the bid yield of each accepted tender. The interest rate on the securities and the price equivalent of each accepted bid will be determined in the manner described below. Additional amounts of these securities may be issued to Government accounts and Federal Reserve Banks for their own account in exchange for maturing Treasury securities. Additional amounts of the new securities may also be issued at the average price to Federal Reserve Banks, as agents for foreign and international monetary authorities.

2. Description of Securities

2.1. The securities will be dated October 31, 1983, and will bear interest from that date, payable on a semiannual basis on April 30, 1984; and each subsequent 6 months on October 31 and April 30 until the principal becomes payable. They will mature October 31, 1985, and will not be subject to call for redemption prior to maturity. In the event an interest payment date or the maturity date is a Saturday, Sunday, or other nonbusiness day, the interest or principal is payable on the next-succeeding business day.

2.2. The income derived from the securities is subject to all taxes imposed under the Internal Revenue Code of 1954. The securities are subject to estate, inheritance, gift, or other excise taxes, whether Federal or State, but are exempt from all taxation now or hereafter imposed on the principal or interest thereof by any State, any possession of the United States, or any local taxing authority.

2.3. The securities will be acceptable to secure deposits of public monies. They will not be acceptable in payment of taxes.

2.4. Securities registered as to principal and interest will be issued in denominations of $5,000, $10,000, $100,000, and $1,000,000. Book-entry securities will be available to eligible bidders in multiples of those amounts. Interchanges of securities of different denominations and of registered and book-entry securities, and the transfer of registered securities will be permitted. Bearer securities will not be available, and the interchange of registered or book-entry securities for bearer securities will not be permitted.

2.5. The Department of the Treasury's general regulations governing United States securities apply to the securities offered in this circular. These general regulations include those currently in effect, as well as those that may be issued at a later date.

3. Sale Procedures

3.1. Tenders will be received at Federal Reserve Banks and Branches and at the Bureau of the Public Debt, Washington, D.C. 20226, prior to 1:30 p.m., Eastern Daylight Saving time, Wednesday, October 19, 1983. Noncompetitive tenders as defined below will be considered timely if postmarked no later than Tuesday, October 18, 1983, and received no later than Monday, October 31, 1983.

3.2. The face amount of securities bid for must be stated on each tender. The minimum bid is $5,000, and larger bids must be in multiples of that amount. Competitive tenders must also show the yield desired, expressed in terms of an annual yield with two decimals, e.g., 7.10%. Common fractions may not be used. Noncompetitive tenders must show the term "noncompetitive" on the tender form in lieu of a specified yield. No bidder may submit more than one noncompetitive tender, and the amount may not exceed $1,000,000.

3.3. Commercial banks, which for this purpose are defined as banks accepting demand deposits, and primary dealers, which for this purpose are defined as dealers who make primary markets in Government securities and report daily to the Federal Reserve Bank of New York their positions in and borrowings on such securities, may submit tenders for account of customers if the names of the customers and the amount for each customer are furnished. Others are permitted to submit tenders only for their own account.

3.4. Tenders will be received without deposit for their own account from commercial banks and other banking institutions; primary dealers, as defined above; Federally-insured savings and loan associations; States, and their political subdivisions or instrumentalities; public pension and retirement and other public funds; international organizations in which the United States holds membership; foreign central banks and foreign states; Federal Reserve Banks; and Government accounts. Tenders from others must be accompanied by full payment for the amount of securities applied for (in the form of cash, maturing Treasury securities, or readily collectible checks), or by a payment guarantee of 5 percent of the face amount applied for, from a commercial bank or a primary dealer.

3.5. Immediately after the closing hour, tenders will be opened, followed by a public announcement of the amount and yield range of accepted bids. Subject to the reservations expressed in Section 4, noncompetitive tenders will be accepted in full, and then competitive tenders will be accepted, starting with those at the lowest yields, through successively higher yields to the extent required to attain the amount offered. Tenders at the highest accepted yield will be prorated if necessary. After the determination is made as to which tenders are accepted, an interest rate will be established, on the basis of a ⅛ of one percent increment, which results in an equivalent average accepted price close to 100.000 and a lowest accepted price above the original issue discount limit of 99.500. That rate of interest will be paid on all of the securities. Based on such interest rate, the price on each competitive tender allotted will be determined and each successful competitive bidder will be required to pay the price equivalent to the yield bid. Those submitting noncompetitive tenders will pay the price equivalent to the weighted average yield of accepted competitive tenders. Price calculations will be carried to three decimal places on the basis of price per hundred, e.g., 99.923, and the determinations of the Secretary of the Treasury shall be final. If the amount of noncompetitive tenders received would absorb all or most of the offering, competitive tenders will be accepted in an amount sufficient to provide a fair determination of the yield. Tenders received from Government accounts and Federal Reserve Banks will be accepted at the price equivalent to the weighted average yield of accepted competitive tenders.

3.6. Competitive bidders will be advised of the acceptance or rejection of their tenders. Those submitting noncompetitive tenders will be notified only if the tender is not accepted in full, or when the price is over par.

4. Reservations

4.1. The Secretary of the Treasury expressly reserves the right to accept or reject any or all tenders in whole or in part, to allot more or less than the amount of securities specified in Section 1, and to make different percentage allotments to various classes of applicants when the Secretary considers it in the public interest. The Secretary's action under this Section is final.

5. Payment and Delivery

5.1. Settlement for allotted securities must be made at the Federal Reserve Bank or Branch or at the Bureau of the Public Debt, wherever the tender was submitted. Settlement on securities allotted to institutional investors and to others whose tenders are accompanied by a payment guarantee as provided in Section 3.4., must be made or completed on or before Monday, October 31, 1983.

Payment in full must accompany tenders submitted by all other investors. Payment must be in cash; in other funds immediately available to the Treasury; in Treasury bills, notes, or bonds (with all coupons detached) maturing on or before the settlement date but which are not overdue as defined in the general regulations governing United States securities; or by check drawn to the order of the institution to which the tender was submitted, which must be received from institutional investors no later than Thursday, October 27, 1983. When payment has been submitted with the tender and the purchase price of allotted securities is over par, settlement for the premium must be completed timely, as specified in the preceding sentence. When payment has been submitted with the tender and the purchase price is under par, the discount will be remitted to be the bidder. Payment will not be considered complete where registered securities are requested if the appropriate identifying number as required on tax returns and other documents submitted to the Internal Revenue Service (an individual's social security number or an employer identification number) is not furnished. When payment is made in securities, a cash adjustment will be made to or required of the bidder for any difference between the face amount of securities presented and the amount payable on the securities allotted.

5.2. In every case where full payment has not been completed on time, an amount of up to 5 percent of the face amount of securities allotted, shall, at the discretion of the Secretary of the Treasury, be forfeited to the United States.

5.3. Registered securities tendered in payment for allotted securities are not required to be assigned if the new securities are to be registered in the same names and forms as appear in the registrations or assignments of the securities surrendered. When the new securities are to be registered in names and forms different from those in the inscriptions or assignments of the securities presented, the assignment should be to "The Secretary of the Treasury for (securities offered by this circular) in the name of (name and taxpayer identifying number)." Specific instructions for the issuance and delivery of the new securities, signed by the owner or authorized representative, must accompany the securities presented. Securities tendered in payment should be surrendered to the Federal Reserve Bank or Branch or to the Bureau of the Public Debt, Washington, D.C. 20226. The securities must be delivered at the expense and risk of the holder.

5.4. Delivery of securities in registered form will be made after the requested form of registration has been validated, the registered interest account has been established, and the securities have been inscribed.

6. General Provisions

6.1. As fiscal agents of the United States, Federal Reserve Banks are authorized and requested to receive tenders, to make allotments as directed by the Secretary of the Treasury, to issue such notices as may be necessary, and to receive payment for and make delivery of securities on full-paid allotments.

6.2. The Secretary of the Treasury may at any time issue supplemental or amendatory rules and regulations governing the offering. Public announcement of such changes will be promptly provided.

Carole J. Dineen,

Fiscal Assistant Secretary.

[FR Doc. 83-28437 Filed 10-14-83; 12:47 pm]

BILLING CODE 4810-40-M

Sunshine Act Meetings

Federal Register
Vol. 48, No. 202
Tuesday, October 18, 1983

This section of the FEDERAL REGISTER contains notices of meetings published under the "Government in the Sunshine Act" (Pub. L. 94-409) 5 U.S.C. 552b(e)(3).

CONTENTS

	Item
Federal Home Loan Bank Board	1
Federal Reserve System	2

1

FEDERAL HOME LOAN BANK BOARD

FEDERAL REGISTER CITATION OF PREVIOUS ANNOUNCEMENT: Vol. No. 48, Page No. None at this time. Date Published—None at this time.

PLACE: Board Room, 6th Floor, 1700 G St., N.W., Washington, D.C.

STATUS: Open meeting.

CONTACT PERSON FOR MORE INFORMATION: Ms. Gravlee, (202–377–6970).

CHANGES IN THE MEETING: The Bank Board meeting previously scheduled for Friday, October 21, 1983, has been changed to Monday, October 24, 1983, at 10 a.m.

No. 60, October 14, 1983.

[S-1470-83 Filed 10-14-83; 11:21 am]

BILLING CODE 6720-01-M

2

FEDERAL RESERVE SYSTEM, (Board of Governors.)

TIME AND DATE: 10 a.m., Monday, October 24, 1983.

PLACE: 20th Street and Constitution Avenue, NW., Washington, D.C. 20551.

STATUS: Closed.

MATTERS TO BE CONSIDERED:

1. Personnel actions (appointments, promotions, assignments, reassignments, and salary actions) involving individual Federal Reserve System employees.
2. Any items carried forward from a previously announced meeting.

CONTACT PERSON FOR MORE INFORMATION: Mr. Joseph R. Coyne, Assistant to the Board; (202) 452–3204.

Dated: October 14, 1983.

James McAfee,
Associate Secretary.

[S-1471-83 Filed 10-17-83; 3:01 pm]

BILLING CODE 6210-01-M

federal register

Tuesday
October 18, 1983

Part II

Environmental Protection Agency

Standards of Performance for New Stationary Sources; Synthetic Organic Chemical Manufacturing Industry; Equipment Leaks of VOC, Reference Methods 18 and 22; Final Rule

ENVIRONMENTAL PROTECTION AGENCY

40 CFR Part 60

[AD-FRL 2297-2]

Standards of Performance for New Stationary Sources; Synthetic Organic Chemical Manufacturing Industry; Equipment Leaks of VOC, Reference Methods 18 and 22

AGENCY: Environmental Protection Agency (EPA).

ACTION: Final rule.

SUMMARY: This action promulgates standards of performance for equipment leaks of Volatile Organic Compounds (VOC) in the Synthetic Organic Chemical Manufacturing Industry (SOCMI). The standards were proposed in the **Federal Register** on January 5, 1981 (46 FR 1136). These standards implement Section 111 of the Clean Air Act and are based on the Administrator's determination that emissions from the synthetic organic chemical manufacturing industry cause, or contribute significantly to, air pollution which may reasonably be anticipated to endanger public health or welfare. The intended effect of these standards is to require all newly constructed, modified, and reconstructed SOCMI process units to use the best demonstrated system of continuous emission reduction for equipment leaks of VOC, considering costs, nonair quality health and environmental impact and energy requirements.

DATES: Effective date: October 18, 1983.

These standards of performance become effective upon promulgation but apply to affected facilities for which construction or modification commenced after January 5, 1981.

Under Section 307(b)(1) of the Clean Air Act, judicial review of these standards of performance is available *only* by the filing of a petition for review in the U.S. Court of Appeals for the District of Columbia Circuit within 60 days of today's publication of this rule. Under Section 307(b)(2) of the Clean Air Act, the requirements that are the subject of today's notice may not be challenged later in civil or criminal proceedings brought by EPA to enforce these requirements.

The Director of the Federal Register approves the incorporation by reference of certain publications in 40 CFR effective on October 18, 1983.

ADDRESSES: *Background Information Documents.* The background information document (BID) for the promulgated standards may be obtained from the U.S. EPA Library (MD-35), Research Triangle Park, North Carolina 27711, telephone number (919) 541-2777. Please refer to "Equipment Leaks of VOC in Synthetic Organic Chemicals Manufacturing Industry—Background Information for Promulgated Standards of Performance" (EPA-450/3-80-033b). The BID contains (1) a summary of all the public comments made on the proposed standards and EPA's responses to the comments, (2) a summary of the changes made to the standards since proposal, and (3) the final Environmental Impact Statement which summarizes the impacts of the promulgated standards. The BID for the proposed standards may be obtained from the National Technical Information Service, U.S. Department of Commerce, Springfield, Virginia 22161. Please refer to "VOC Fugitive Emissions in Synthetic Organic Chemicals Manufacturing Industry—Background Information for Proposed Standards," EPA-450/3-80-033b (NTIS PB81-152167). The additional information document (AID) describing emissions, emission reductions, and costs related to equipment leaks of VOC may also be obtained from the National Technical Information Service, U.S. Department of Commerce, Springfield, Virginia 22161. Please refer to "Fugitive Emission Sources of Organic Compounds—Additional Information on Emissions, Emission Reductions, and Costs," EPA-450/3-82-010 (NTIS PB82-217126).

Docket. A docket, number A-79-32, containing information considered by EPA in development of the promulgated standards, is available for public inspection between 8:00 a.m. and 4:00 p.m., Monday through Friday, at EPA's Central Docket Section (A-130), West Tower Lobby, Gallery 1, 401 M Street, SW., Washington, D.C. 20460. A reasonable fee may be charged for copying.

FOR FURTHER INFORMATION CONTACT: Mr. Fred Dimmick, Standards Development Branch, Emission Standards and Engineering Division (MD-13), U.S. Environmental Protection Agency, Research Triangle Park, North Carolina 27711, telephone (919) 541-5578.

SUPPLEMENTARY INFORMATION:

Summary of Standards

Standards of performance for new sources established under Section 111 of the Clean Air Act reflect:

. . . application of the best technological system of continuous emission reduction which (taking into consideration the cost of achieving such emission reduction, and any nonair quality health and environmental impact and energy requirements) the Administrator determines has been adequately demonstrated [Section 111(a)(1)].

As prescribed by Section 111 of the Clean Air Act, promulgation of these standards was preceded by the Administrator's determination (40 CFR 60.16, 44 FR 49222, dated August 21, 1979) that these sources contribute significantly to air pollution which may reasonably be anticipated to endanger public health or welfare.

Standards of performance for equipment leaks of volatile organic compounds (VOC) in the synthetic organic chemical manufacturing industry (SOCMI) were proposed on January 5, 1981 (46 FR 1136).[1] The promulgated standards apply to specific equipment with the potential to leak VOC within process units operated to produce one or more of the organic chemicals listed in the standards. The equipment covered by the standards and grouped in a process unit are designated as the "affected facility" for determining applicability of the standards. A process unit is a group of equipment that can be used independently, if sufficient raw material and product storage capacity could be supplied, to produce one or more chemicals. Process units used to produce the chemicals covered by the standards may involve chemical synthesis, bilological synthesis, other processing, or physical operations, such as separation. A plant may be composed of one or more process units.

Valves, pumps, compressors, pressure relief devices, sampling systems, and open-ended lines in VOC services (that is, containing 10 percent or more VOC by weight) are the equipment covered by the standards. The standards require (1) a leak detection and repair program for valves in gas/vapor and light liquid service and pumps in light liquid service; (2) equipment for compressors, sampling systems, and open-ended lines; (3) no detectable emissions (500 ppm as determined by Reference Method 21) for pressure relief devices in gas/vapor sesrvice during normal operation. In response to comments on the proposed standards, EPA is exempting from the

[1] The proposed standards referred to fugitive emission sources of VOC as the air pollution emission points covered by the standards. The terminology fugitive emission sources can be confusing. The standards apply to equipment with the potential to leak VOC and, therefore, the promulgated standards refer to equipment leaks of VOC as the air pollution emission points covered by the standards. The Priority List (40 CFR 60.16) specifies fugitive emission sources within the SOCMI source category. Equipment leaks of VOC are included in fugitive emision sources for the purpose of the Priority List.

standards facilities producing less than 1,000 megagrams (Mg) of SOCMI chemicals per year, facilities processing only heavy liquids or solids, and facilities producing beverage alcohol. In addition, the final standards provide a procedure for determining the equivalency of alternative control measures similar to the proposed procedure.

Standards for Valves. The standards for valves have not substantially changed since proposal. They are based on a leak detection and repair program that requires (1) monthly monitoring for valves in gas/vapor and light liquid service, (2) an intitial attempt at repairing these valves within 5 days after detection of a leak, (3) repair of leaking valves within 15 days after detection of the leak unless repair would require a process unit shutdown, and (4) repair of valves during the next process unit shutdown after repair is delayed until a process unit shutdown. Valves found not to leak for 2 successive months can be monitored quarterly until leaks are deteted. Monitoring of equipment to detect leaks is conducted in accordance with Reference Method 21 and a leak is defined as a measured organic concentration equal to or greater than 10,000 parts per million by volume (ppmv).

Two alternative standards have been provided for valves in gas/vapor and light liquid service in the final standards. These alternatives are (1) a limit of 2 percent of valves which may be leaking at any one time and (2) a skip-period leak detection and repair program for process units achieving less than 2 percent of their valves leaking. These alternative standards, although slightly different than the alternative standards included in the proposed standards, establish standards for owners and operators who design and operate low-peak process units. For low-leak process units, the costs of the monthly leak detection and repair program is unreasonably high in comparison to the emission reductions.

Standards for Pumps. The final standards include a leak detection and repair program that requires (1) monthly monitoring of pumps in light liquid service, (2) weekly visual inspections of the seals on pumps in light liquid service, (3) an attempt at repairing a pump within 5 days after detection of a leak, and (4) repair of a leaking pump within 15 days after detection of a seal failure or leak unless repair would require a process unit shutdown. Pumps that have repair delayed until a process unit shutdown must be repaired during the next process unit shutdown. If a pump cannot be repaired without the use of dual seals and barrier fluid systems or vented seal areas, a delay of repair is allowed to install the equipment. In this case, an owner or operator must install the equipment as soon as practicable but may take no longer than 6 months.

The proposed standards required the use of equipment. The use of equipment reduces more emissions than the monthly leak detection and repair program. Even though the standards have changed, pumps in light liquid service alternately could use the equipment specified in the proposed standards and, thereby, not be required to implement the monthly leak detection and repair program.

Standards for Compressors. The standards have not changed since proposal and require compressors to be equipped with seals having a barrier fluid system that prevents leakage of the process fluid to the atmosphere. The system must: (1) Use a barrier fluid that is something other than a light liquid or gaseous VOC; (2) either operate at a pressure greater than the compressor seal area pressure, or be equipped with a barrier fluid degassing reservoir connected by a closed vent system to a control device; and (3) be equipped with a sensor so that seal failures may be detected. When seal failure is detected, repair is required within 15 days unless repair would require a process unit shutdown. An initial attempt at repair is required within 5 days. If a compressor is equipped with a closed vent system to transport leakage from the seal to a control device, it is exempt from the above requirements.

Certain reciprocating compressors covered by virtue of modification and reconstruction may be exempt from the requirements for compressors. Some existing compressors are not designed to use the equipment required by the standards. For these compressors either new compressor or a new distance-piece would be required before compliance with the standards could be achieved. The cost impact of installing the required control equipment on these existing compressors is unreasonable. These compressors will be exempt from the standards until they are replaced by new compressors or the distance pieces are replaced.

Standards for Sampling Connections. The standards require that VOC purged from sampling connections be recycled to the process by a closed sampling loop or that these VOC be collected in a closed collection system for recycle or disposal without VOC emission to atmosphere. In-situ sampling systems are exempt from these requirements. These standards have not changed since proposal.

Standards for Open-ended Lines. The standards require that: (1) Open-ended lines be sealed with a second valve, cap, blind flange or plug except when the open-ended line is in use; and (2) if a second valve is used, the valve on the process side be closed first to avoid trapping VOC between the valves. These standards have not changed since proposal.

Standards for Pressure Relief Devices. The standards require that: (1) Pressure relief devices have "no detectable emissions" of VOC except in cases of overpressure relief; and (2) after each overpressure relief, pressure relief devices be returned to a state of no detectable emissions within 5 days. These standards have not changed since proposal. As noted in the preamble to the proposed standards, pressure relief devices are one of the few fugitive emission sources for which a performance standard can be established. There are a variety of alternative ways of complying with this standard. "No detectable emissions" of VOC, in this case, means 500 ppm or less above the background level as measured by Reference Method 21.

Standards for Control Devices. The standards include requirements for control devices used in conjunction with control of equipment leaks. The standards require: (1) That vapor recovery systems be designed and operated for at least 95 percent control; (2) that enclosed combustion devices be designed and operated to provide a minimum residence time of 0.75 seconds at a minimum temperature of 816°C or to achieve 95 percent reduction; and (3) that flares (a) be operated with no assist or with air or steam assist, (b) be designed and operated with no visible emissions except for periods of time not to exceed 5 minutes in any 2-hour period, (c) be operated with a flame present, and (d) meet other operational requirements including maximum exit gas velocities and minimum heat content values. Flares have been added to the approaches for achieving the standards since proposal. Otherwise, the standards for control devices have not changed since proposal.

Miscellaneous Provisions. Flanges, pressure relief devices in liquid service, equipment operating at subatmospheric pressures, and all equipment components in "heavy liquid" VOC service are excluded from the routine monitoring requirements of the proposed standards. Heavy liquids are defined as VOC liquids with vapor pressures less

than 0.3 kilopascals at 20°C. Even though the standards do not require monitoring these equipment for leaks, the standards require VOC leaks which are visually or otherwise detected from these equipment to be repaired within 15 days if a leak is confirmed using Reference Method 21. This provision improves current industry housekeeping practices for these pieces of equipment.

Under Section 111(h)(3), any person may request the Administrator to permit the use of an alternative means of emission limitation instead of a design, equipment, work practice or operational standard. The Administrator will permit the use of such alternative means if the Administrator determines, after notice and opportunity for a public hearing, that it will achieve emission reductions at least equivalent to those required by the design, equipment, work practice or operational standards. The permission will take the form of an amendment to the appropriate standards.

Compliance with the leak detection and repair program and equipment requirements will be assessed through semiannual reports, review of records, and by inspection. The semiannual reports provide a summary of the data recorded on leak detection and repair of valves, pumps, and of other equipment types. In response to public comments, requirements for routine reporting were reduced from quarterly to semiannual reporting. Notifications are still required as described in the General Provisions for new source standards (40 CFR 60.7).

The semiannual reports may be waived for affected facilities in States where the regulatory program has been delegated, if EPA, in the course of delegating such authority, approves reporting requirements or an alternative means of source surveillance adopted by the State. In these cases, such sources would be required to comply with the requirements adopted by the State.

Records of leak detection, repair attempts, and maintenance for equipment leaks of VOC are required by the standards. These records, along with semiannual reporting and plant inspections, will be used to enforce the standards. The records remain essentially the same as those in the proposed standards. Some changes have occurred because the requirements for the equipment covered by the standards have changed. In addition, EPA has made it clear that an owner or operator may keep the records for several affected facilities at one location in a plant rather than at each process unit.

Miscellaneous Actions. The General Provisions of Part 60 are being revised to provide technical amendments to the provisions in 40 CFR 60.7, 60.11, and 60.17. Also, Reference Method 18 is being added to Appendix A of Part 60 and Reference Method 22 is being revised. These methods will be used to determine compliance with the requirements for flares.

Summary of Impacts

Emission Reductions. The standards of performance will reduce equipment leaks of VOC from newly constructed, modified, and reconstructed process units in SOCMI by approximately 56 percent in comparison to those emissions that would result in the absence of the standards. The standards will cover about 830 newly constructed, modified, and reconstructed sources in 1985. The standards will reduce the emissions associated with current industry practices from approximately 83,000 to 37,000 Mg in 1985 (that is, 91,000 to 41,000 tons) for newly constructed, reconstructed, and modified process units.

Cost and Economic Impacts. The cost and economic impacts of the standards are reasonable. The standards will require an industry-wide capital investment over the 5-year period from 1981 to 1986 of approximately $44 million for those facilities which are newly constructed, reconstructed, or modified. The industry-wide net annualized cost will be about $14.6 million in 1985. This net annualized cost includes a credit resulting from "recovered" emissions. The costs will be distributed among 830 facilities affected during the 5-year period. Industry-wide price increases are not expected to result from these standards.

Other Impacts. The standards of performance will not increase the energy usage of SOCMI process units. In general, the controls required by the standards do not require energy. Futhermore, the effect of the standards will be to increase efficiency of raw material usage so that a net positive energy impact will result. Implementation of the standards will have no impact on solid waste within SOCMI. In contrast, the standards could also cause a small positive impact on water quality by containment of potential liquid leaks. The recordkeeping and reporting requirements will require an average of 65 industry person years annually for the years of 1983 and 1984.

The environmental, energy, and economic impacts are discussed in greater detail in the background information document for the promulgated standards. [See the **ADDRESSES** section of this preamble.]

Public Participation

Prior to proposal of the standards, interested parties were advised by public notice in the **Federal Register** (45 FR 18474, March 21, 1980) of a meeting of the National Air Pollution Control Techniques Advisory Committee to discuss the standards for equipment leaks of VOC in SOCMI recommended for proposal. This meeting was held on April 16, 1980. The meeting was open to the public, and each attendee was given an opportunity to comment on the standards recommended for proposal. The standards were proposed in the **Federal Register** on January 5, 1981 (46 FR 1136). The preamble to the proposed standards discussed the availability of the background information document for the proposed standards which described in detail the regulatory alternatives considered and the impacts of those alternatives.

Public comments were solicited at the time of proposal and, when requested, copies of the BID were distributed to interested parties. To provide interested persons the opportunity for oral presentation of data, views, or arguments concerning the proposed standards, a public hearing was held on March 3, 1981, at Research Triangle Park, North Carolina. The hearing was open to the public and each attendee was given an opportunity to comment on the proposed standards. The public comment period was from January 5, 1981 to July 31, 1981. The comment period was extended to July 31, 1981, to allow interested parties to comment on several studies performed by EPA's Office of Research and Development which became available at proposal or after proposal. Fifty-six comment letters were received and 9 interested parties testified at the public hearing concerning issues relative to the proposed standards of performance for equipment leaks of VOC from SOCMI units.

EPA published an Additional Information Document (AID) in April of 1982. The AID contains a technical discussion of methodologies and estimates of emissions, emission reductions, and costs associated with control of equipment leaks of VOC. A notice of the availability of the AID and a request for comments on the AID was published in the **Federal Register** on May 7, 1982 (47 FR 19724). Fourteen letters were received containing comments on the AID.

Comments on the proposed standards and on the AID have been carefully considered and, where determined to be appropriate by the Administrator,

changes have been made in the proposed standards.

Significant Comments and Changes to the Proposed Standards

Comments on the proposed standards were received from industry, State and local air pollution control agencies, trade associations, and environmental groups. A detailed discussion of these comments and responses can be found in the BID for the promulgated standards. [See the **ADDRESSES** section of this preamble.] The comments and responses in the BID serve as the basis for the revisions which have been made to the standards between proposal and promulgation. Major changes made in the standards since proposal are indicated in the "Summary of Standards" section of the preamble. The major comments and responses are summarized in the next sections of this preamble. The comments and responses in this preamble have been combined into the following areas: Need for Standards, Selection of the Final Standards, Control Technology—Use of Flares, and Test Methods and Monitoring.

Need for Standards

Comment 1: Commenters questioned whether standards of performance are needed for SOCMI because SOCMI equipment leaks emit small quantities of VOC.

Response 1: SOCMI is a significant source of VOC emissions and equipment leaks of VOC are one of the primary contributors to the total VOC emissions from SOCMI. EPA estimates that 540,000 megagrams per year (Mg/yr) of VOC are emitted from all sources in SOCMI (docket item IV-B-24). This estimate of emissions is based on detailed studies of individual process source types including air oxidation processes, distillation operations, storage operations, carrier gas processes, equipment leaks, and secondary sources. Five hundred forty thousand Mg/yr is a significant quantity of VOC to be emitted as air pollution.

The significance of SOCMI VOC emissions is reflected in the Priority List, 40 CFR 60.16. Of the 59 major source categories on this list for which standards of performance were to be promulgated by 1982, the SOCMI source category ranked first. The Priority List consists of categories of air pollution sources that, in EPA's judgment, cause or contribute significantly to air pollution which may reasonably be anticipated to endanger public health or welfare. In developing the Priority List, major source categories were ranked according to three criteria specified in Section 111(f) of the Act: (1) The quantity of emissions from each source category, (2) the extent to which each pollutant endangers public health or welfare, and (3) the mobility and competitive nature of each stationary source category. Commenters have not presented any new information which would change the decision to list SOCMI on the Priority List.

Based on comments and information received during this rulemaking, EPA has revised the estimates of emissions of VOC from equipment leaks within SOCMI since the standards were proposed. The current estimate of 540,000 Mg/yr includes the revised emission estimates. Even with the revised emission estimates, the Administrator still considers SOCMI a source category that causes or contributes significantly to air pollution which may reasonably be anticipated to endanger public health or welfare. It should be noted that because VOC emissions come from many, diverse source categories, each source category contributes a relatively small percentage to the large overall total emissions. Even though SOCMI may represent a small percentage of total VOC emissions, the magnitude of emissions from SOCMI is significant.

Since SOCMI is on the Priority List as a significant contributor to air pollution under section 111(f), standards of performance are required to be promulgated for those new sources within this source category for which the EPA can identify the best demonstrated technology (considering costs). EPA has identified several alternative systems of control capable of achieving additional emission reduction at reasonable cost at SOCMI sources. It is, therefore, reasonable for EPA to establish standards for these sources.

In addition, standards of performance have other benefits in addition to achieving emissions reductions. Standards of performance establish a degree of national uniformity to air pollution standards, and therefore, preclude situations in which some States may attract new industries as a result of having relaxed standards relative to other States. Further, standards of performance provide documentation that reduces uncertainty in evaluations of available control technology. This documentation includes identification and comprehensive analyses of alternative emission control technologies, development of associated costs, evaluation and verification of applicable emission test methods, and identification of specific emission limits achievable with alternate technologies. This documentation also provides an economic analysis that reveals the affordability of controls in a study of the economic impact of controls on an industry.

Comment 2: Commenters stated that there is no need for the standards because emissions of VOC in SOCMI are adequately controlled by other regulations, specifically:

(a) National ambient air quality standards (NAAQS) and the State implementation plans (SIP) to implement these standards;

(b) National emission standards for hazardous air pollutants (NESHAP); and

(c) Occupational safety and health standards under the Occupational Safety and Health Act (OSHA).

Response 2: Standards of performance required by Section 111 play a unique role under the Clean Air Act. The main purpose of standards of performance is to require new sources, wherever located, to reduce emissions to the level achievable by the *best* technological system of continuous emission reduction considering the cost of achieving such emission reduction, any nonair quality health and environmental impact, and energy requirements [(Section 111(a)(1))]. Congress recognized that establishing such standards would minimize increases in air pollution from new sources, thereby improving air quality as the Nation's industrial base is replaced over the long term. The role of standards of performance in achieving the goals set forth in the Clean Air Act is distinct from that of other regulations.

(a) *NAAQS and SIP:* Reasonably available control technology (RACT) requirements apply to existing sources and are based on SIP's developed for the purpose of attaining the NAAQS. Standards of performance supplement the role played by RACT and the two types of control do not conflict. In the few areas where RACT-level control is already in place, the environmental impact of standards of performance will be smaller than calculated. EPA has determined, however, that existing RACT-level facilities that become subject to the standards of performance (e.g., through modification) will be achieving additional emission reductions at reasonable costs. In most areas of the Nation, RACT-level controls are not in place and the standards fulfill their role of preventing new air pollution from developing as the Nation's industrial base is replaced.

(b) *NESHAP:* NESHAP, as mandated under Section 112 of the Clean Air Act, are distinctly separate from NAAQS or new source standards of performance. NESHAP are developed to control

pollutants that are hazardous because they are carcinogens or the cause of other serious diseases. Some of the individual SOCMI chemicals have been identified as hazardous air pollutants and some SOCMI units may be affected by NESHAP regulations. However, SOCMI VOC emissions as a class have not been identified as hazardous pollutants, and therefore, are not subject to NESHAP.

(c) *OSHA:* Many of the chemicals covered by the standards are also listed in Table Z-1, Toxic and Hazardous Substances, in the general provisions for OSHA (29 CFR 1910.1000), and some of these chemicals are also covered by more specific health standards under OSHA. As a consequence, the SOCMI standards and the OSHA standards may affect the same equipment in VOC service. However, this possibility does not negate the need for the standards.

The SOCMI standards of performance serve to limit mass emission rates directly; OSHA standards for toxic chemicals generally do not. Under OSHA, control of emission sources may include substitution with less hazardous materials, process modification, worker rotation, process or worker isolation, ventilation controls, or modification of work practices. These controls reduce occupational exposures, but they do not necessarily reduce the mass rate of VOC emissions to the atmosphere. Furthermore, OSHA regulations would require control to different concentration levels, depending on the toxicity of a specific chemical, while the standards of performance require emission control for all VOC. Relying on indirect controls that may or may not reduce emissions that would degrade air quality would be an unreasonable approach to reducing emissions of VOC.

Comment 3: Commenters claimed that the standards are not needed to protect the public health and welfare. These commenters noted that the ambient air quality standard for ozone which is set to protect the public has recently been raised. The commenters continued by adding that, because most of the country is in compliance with the ozone standard, the public health and welfare is already protected and, therefore, the standards of performance are not needed.

Response 3: Standards of performance are not directly designed to achieve the ambient air quality goals. Their overriding purpose is rather to minimize emissions at all new and modified sources, wherever they are located, to prevent new pollution problems from developing, and to enhance air quality as the Nation's industrial base is replaced. Thus, the standards may not bear directly on current attainment or nonattainment of NAAQS for ozone. Nonetheless, they do make room for future industrial growth while preventing future air quality problems—complementing the prevention of significant deterioration (PSD) and non-attainment rules as a means of achieving and maintaining the NAAQS. Clearly, residents in both attainment and non-attainment areas will ultimately benefit from such standards.

Basis for the Final Standards

Comment: Several commenters questioned EPA's selection of the proposed standards. The commenters felt that other regulatory options would have been more cost-effective and, therefore, should have been chosen. Referring to the regulatory alternatives presented in EPA-450/3-80-033a, some commenters recommended selection of regulatory alternatives II or III instead of regulatory alternative IV. Some commenters also suggested that EPA select the final standards after considering the cost effectiveness of each control technique for each piece of equipment covered by the standards. Other commenters recommended selection of regulatory alternative IV.

Response: Section 111 of the Clean Air Act, as amended, requires that standards of performance be based on the best system of continuous emission reduction that has been adequately demonstrated, considering costs, nonair quality health and environmental impacts and energy requirements. The control techniques for equipment leaks of VOC have been adequately demonstrated. The nonair quality health and environmental impacts associated with implementaion of the standards are positive.

Since proposal, EPA has decided to accept the suggestions of the commenters and focus further on cost effectiveness as the basis for the selection of final standards. In using cost effectiveness of individual control techniques as the basis for selection, the regulatory alternative framework presented in the BID for the proposed standards is no longer pertinent and is not presented. The control strategies represented by the regulatory alternatives were, however, considered in the selection of the final standards. In choosing among the control techniques for each type of equipment covered by the standards, EPA first considered their relative cost effectiveness. Then, for the control techniques which were selected as the most effective with reasonable costs, EPA considered the economic impact on the industry of these control techniques.

Cost-Effectiveness Considerations. EPA analyzed the annualized cost of controlling VOC emissions and the resultant VOC reduction for each alternative control technique. The control costs per megagram of VOC reduced for medium-sized process units are presented in Table 1 for each equipment type covered by the standards. These costs do not represent the actual amounts of money spent at any particular plant site. The cost of VOC emission reduction systems will vary according to the chemical product being produced, production equipment, plant layout, geographic location, and company preferences and policies. However, these costs and emission reductions are considered typical of control techniques for leaking equipment within SOCMI units and can be used in selecting the level of control to be required by the standards.

Pressure Relief Devices. The annualized costs and VOC emission reductions achieved for monthly and quarterly leak detection and repair programs and for the use of control equipment (rupture disks) were determined for pressure relief devices in gas service. As Table 1 shows, both the quarterly and monthly leak detection and repair programs are less expensive than installation of rupture disks.

TABLE 1.—CONTROL COSTS PER MEGAGRAM OF VOC REDUCED [a]

Equipment type and control technique [b]	Emission reduction (Mg/yr)	Average $/Mg [c]	Incremental $/Mg [d]
Pressure relief devices:			
Quarterly leak detection and repair	4.4	(*)	.....
Monthly leak detection and repair	5.1	(*)	500
Rupture disks [f]	10.0	510	1,200
Compressors: *Controlled degassing vents* [f]	4.0	(*)	(*)
Open-ended lines: *Caps on open-ended lines* [f]	6.2	400	400
Sampling Systems: *Closed purge sampling* [f]	3.4	590	590
Valves:			
Semi-annual leak detection and repair	17.1	(*)	.....
Quarterly repair leak detection and repair	26.9	(*)	(*)
Monthly leak detection and repair [f]	33.6	62	480
Pumps:			
Quarterly leak detection and repair	4.1	1,200	.....
Monthly leak detection and repair [f]	7.6	610	(*)

TABLE 1.—CONTROL COSTS PER MEGAGRAM OF VOC REDUCED [a]—Continued

Equipment type and control technique [b]	Emission reduction (Mg/yr)	Average $/Mg [c]	Incremental $/Mg [d]
Dual mechanical seal systems vented to a flare	12.6	2,300	5,600

[a] Costs and emission reductions based on equipment counts in Model Unit B. See Section 3.2 of the BID for the promulgated standards.
[b] Further discussion of control techniques can be found in Section 4 of the BID for the promulgated standards.
[c] Average dollars per megagram (cost effectiveness) = (net annualized cost per component) ÷ (annual VOC emission reduction per component).
[d] Incremental dollars per megagram = (net annualized cost of the control technique) − net annualized cost of the next less restrictive control technique ÷ (annual emission reduction of control technique − annual emission reduction of the next less restrictive control technique).
[e] Values are savings with the total savings indicated in the text.
[f] Control technique selected as the basis for the standard.

Leak detection and repair programs result in average credits of $240/Mg and $150/Mg of VOC for quarterly and monthly programs, respectively. A monthly leak detection and repair program achieves an additional 0.7 Mg/yr emission reduction for medium-sized process units at an incremental cost of $500/Mg compared to a quarterly leak detection and repair program. Rupture disks achieve an additional 4.9 Mg/yr emission reduction at an incremental cost of $1,200/Mg compared to a monthly leak detection and repair program. However, EPA is establishing a performance standard (as indicated by no detectable emission limit) allowing a variety of alternative ways to complying with the standard. Because EPA used conservative assumptions in making this incremental cost calculation, the $1,200/Mg incremental cost of achieving this 4.9 Mg/yr of emission reduction is more than what many process units would experience. Thus, a no detectable emission limit was selected as the basis for the pressure relief device standard.

Compressors. Only one control technique can be considered for compressor seals: the installation of control equipment such as barrier fluid systems. If a compressor is found leaking, the repair procedure would be the installation of control equipment. Because compressors are not generally spared, repair would be delayed until the next turnaround, thereby reducing the effectiveness of a leak detection and repair program to essentially zero. The installation of control equipment results in a savings ($100/Mg of VOC), indicating that the the value of product retained by controlling the barrier fluid system exceeds the cost of the control equipment. This cost is reasonable and, therefore, control equipment was selected as the basis for the standard for compressors.

Open-ended Lines and Sampling Systems. EPA considered caps or closures as the control technique for open-ended lines. Caps and closures are in wide-spread use in SOCMI and are expected to be used even more frequently in new SOCMI units. The cost and emission reduction presented in Table 1 are the cost and emission reduction which would be realized for an open-ended line that is not controlled. The $400/Mg cost for controlling emissions of VOC from open-ended lines is reasonable.

EPA considered closed purge sampling as the control technique for sampling systems. Closed purge systems are becoming increasingly common in the chemical industry. The $590/Mg cost for controlling emissions of VOC from sampling systems is reasonable.

Valve. Several leak detection and repair programs were considered for valves. The programs differed in the monitoring frequency which would be implemented. As Table 1 shows, the quarterly monitoring program results in savings ($41/Mg of VOC on the average). This occurs because the value of the recovered VOC is greater than the cost to implement the quarterly monitoring program. However, the largest emission reduction is associated with the monthly program at an average cost of $62/Mg. Furthermore, the incremental cost per Mg VOC emissions reduced for the monthly program is $510/Mg with an incremental emission reduction of 6.7 Mg/yr for a medium-sized process unit. EPA considers these costs to be reasonable. Therefore, EPA selected a monthly leak detection and repair program as the basis for the standard for valves.

Pumps. The control costs incurred for each megagram of VOC emissions reduced were determined for two leak detection and repair programs and for the use of dual mechanical seals with controlled degassing vents. Both leak detection and repair programs incur lower costs than the costs which would be incurred with equipment installation. The lowest average and incremental costs per Mg are associated with a monthly leak detection and repair program. The monthly program achieves a higher degree of control than the quarterly program, but it achieves a lower degree of control than installation of contol equipment. However, even though control equipment provides for the greatest amount of VOC reduction, the $5,600/Mg incremental costs to obtain the additional 5 Mg/yr are judged to be unreasonably high. Because the costs for equipment are unreasonably high, monthly leak detection and repair was selected as the basis for the standard for pumps.

Economic Impact Considerations. An economic analysis was performed which evaluated the economic impacts of the selected standards. The results of that analysis are presented in detail in the BID for the promulgated standards. As summarized in the Summary of the Impacts of the Standards section of this preamble, the industry-wide net annualized cost will be about $14.6 million in 1985. This cost is not expected to result in industry-wide price increases. These impacts are reasonable.

Control Technology—Use of Flares

Comment: Several commenters expressed the desire to use flares as alternatives to enclosed incinerators or vapor recovery systems. The comments focused on: (1) Data base support of low flare efficiency, (2) high efficiencies reported for flares on refinery gases, (3) alternative flare designs for low flow applications, (4) safety considerations in choosing control systems, and (5) equivalency to other combustion devices.

Response: The control technology for controlling equipment leaks of VOC from SOCMI is discussed in the background information documents (BID's) for the proposed standards and for the promulgated standards. [See **ADDRESSES** section of this preamble.] In the BID for the proposed standards, EPA discussed the control technology that can be used in complying with the standards. As discussed in the BID for the promulgated standards, EPA reviewed the comments received on the control technology for controlling equipment leaks and found nothing which would alter the original judgments concerning these control techniques except with regard to the control efficiency associated with flares used in SOCMI.

The use of flares was reconsidered by EPA. Flares are used widely in SOCMI for handling emergency releases from process units and for combusting streams from continuous vents. Since the flare efficiency estimate at proposal was made, further actual flare measurement results have become available, most notably from the Chemical Manufacturers Association

(CMA)-EPA study. In the CMA-EPA study, flares were investigated over a wide range of exit velocity, composition, and flare gas heat content conditions. After review of available flare efficiency data, EPA has concluded that smokeless flares designed for and operated under certain conditions are acceptable alternatives to enclosed combustion devices (incinerators, boilers, process heaters) or vapor recovery systems, such as carbon adsorbers and condensation units. For example, steam-assisted flares must have flare gas heat contents greater than 11.2 megajoules per standard cubic meter and exit velocities less than 18 meters per second. Flares achieving these conditions are acceptable because they achieve more than 95 percent emission reduction. The presence of a flame can be ensured by monitoring the flare's pilot light with an appropriate heat sensor, such as a thermocouple. To ensure smokeless operation, visible emissions from a flare would be limited to less than 5 minutes in any 2-hour period as determined by Reference Method 22.

Import on Small Manufacturers

Comment: Commenters requested an exemption for small manufacturers. These commenters were mostly concerned with the impact on process units with few equipment and process units with low production volumes.

Respone: Data from test work on equipment leaks of VOC, however, do not show any definite relationship between emissions and production volume. Equipment leaks of VOC and the cost of their control are proportional to the number of equipment components in a plant rather than the plant size or production volume. However, there are some process units (e.g., research and development facilities) which have production rates so small that their VOC emissions from equipment leaks are likely to be very small and, as a consequence, the cost to control these emissions would be unreasonably high. EPA has excluded from the standards process units producing less than 1,000 Mg/yr. The lower production rate cutoff was developed on the basis of cost and emission reduction considerations and is explained in Section 5.7 of the BID for the promul gated standards.

Test Method and Monitoring

Comment: Commenters requested that hexane be the required calibration gas for the application of Reference Method 21 to SOCMI leak detection and repair programs. Reference Method 21 specifies the monitor and the methodology to be used to detect leaks for required leak detection and repair programs. The proposed standards required that methane be used as the calibration gas. Two reasons were given for their desire to use hexane. First, commenters believed (on the basis of response factors) that the use of methane would result in the detection of more leaks. Second, there is at least one type of portable VOC detector which responds to hexane but does not respond to methane.

Response: EPA considered the differences between leak frequencies found using hexane and leak frequencies found using methane. The differences are not significant. The variability seen in repeat sampling of the same piece of equipment was 23 percent. The variability is in the same range as the 30 percent difference seen in response between the TLV-hexane system and the OVA-methane systems at the 10,000 ppmv definition of a leak. Because the variability in repeat sampling is similar to the differences in response at 10,000 ppmv, the data can be used interchangeably within 30 percent at the action level. Because an error of 30 percent at the action level is a small error considering all the errors associated with leak detection, there is no need to change the required calibration gas on the basis offered by the commenters. However, since some types of analyzers may be useful in certain SOCMI process units, and these types do not respond to methane, hexane has been added to the regulation as an alternate calibration material.

The use of hexane as an alternate calibration material is not limited to a single type of detector. The owner or operator may choose to use either calibrant with any allowable instrument. However, in any performance test conducted by EPA or a State agency, the VOC detector is likely to be calibrated with methane, even if the calibrant selected by the owner or operator is different, because methane calibrants are easier to obtain and deteriorate less than hexane calibrants.

Docket

The docket is an organized and complete file of all the information considered by EPA in the development of this rulemaking.The docket is a dynamic file, since material is added throughout the rulemaking process. The docketing system is intended to allow members of the public and industries involved to identify and locate documents so that they can participate effectively in the rulemaking process. Along with the statement of basis and purpose of the proposed and promulgated standards and EPA responses to significant commets, the contents of the docket will serve as the record in case of judicial review, except for interagency review materials [Section 307(d)(7)(A)].

Miscellaneous

In accordance with Section 117 of the Act, publication of these promulgated standards was preceded by consultation with appropriate advisory committees, independent experts, and Federal departments and agencies. This regulation will be reviewed 4 years from the date of promulgation as required by the Clean Air Act. This review will include an assessment of such factors as the need for integration with other programs, the existence of alternative methods, enforceability, improvements in emission control technology, and reporting requirements.

Section 317 of the Clean Air Act requires the Administrator to prepare an economic impact assessment for any new source standard of performance promulgated under Section 111(b) of the Act. An economic impact assessment was prepared for this regulation and for other regulatory alternatives. All aspects of the assessment were considered in the formulation of the standards to insure that cost was carefully considered in determining the best demonstrated technology. The economic impact assessment is included in the background information documents for the proposed standards and the promulgated standards.

Information collection requirements associated with this regulation (those included in 40 CFR Part 60, Subpart A and Subpart VV) have been approved by the Office of Management and Budget (OMB) under the provisions of the Paperwork Reduction Act of 1980, 44 U.S.C. 3501 *et seq.* and have been assigned OMB control number 2060-0012.

"Major Rule" Determination. Under Executive Order 12291, the Administrator is required to judge whether a regulation is a "major rule" and, therefore, subject to certain requirements of the Order. The Administrator has determined that this regulation would result in none of the adverse economic effects set forth in Section 1 of the Order as grounds for finding a regulation to be a "major rule." Fifth-year annualized costs of the standards would be as much as $3.3 million for the 830 newly constructed, modified, and reconstructed production facilities projected that could be affected by the standards during the first 5 years. Significant price increases are not expected to result from

implementation of these standards because the annualized cost is a small fraction (about 0.25 percent) of the yearly revenue expected for the new, modified, and reconstructed units affected during the 5-year period. The Administrator has concluded that this rule is not "major" under any of the criteria established in the Executive Order.

As discussed in the "Basis For The Final Standards" section of this preamble, costs per megagram of VOC emission reduction were used in selecting the standards promulgated by this rulemaking. This regulation was submitted to the OMB for review as required by Executive Order 12291. Any comments from OMB to EPA and any EPA responses to those comments are available for public inspection in Docket No. A-79-32, Central Docket Section, at the address given in the **ADDRESSES** section of this preamble.

Regulatory Flexibility Analysis Certification. The Regulatory Flexibility Act of 1980 requires that adverse effects of all Federal regulations upon small businesses be identified. According to current Small Business Administration guidelines, a small business in the organic chemical manufacturing industry is one that has 1,000 employees or fewer. Current estimates indicate between 10 and 30 percent of the existing industry employ fewer than 1,000 people. Even if facilities owned by small businesses do become subject to the standards, none will be adversely affected. This conclusion is based on the finding that the annualized cost of the standards would be less than 0.25 percent of the yearly revenue expected for units affected by the standards. This finding reflects the economic impact for facilities owned by small businesses and is not considered significant. Pursuant to the provisions of 5 U.S.C. 605(b), I hereby certify that this rule will not have a significant economic impact on a substantial number of small entities.

List of Subjects in 40 CFR Part 60

Air pollution control, Aluminum, Ammonium sulfate plants, Asphalt, Cement industry, Coal Copper, Electric power plants, Glass and glass products, Grains, Intergovernmental relations, Iron, Lead, Metals, Metallic Minerals, Motor vehicles, Nitric acid plants, Paper and paper products industry, Petroleum, Phosphate, Sewage disposal, Steel Sulfuric acid plants, Waste treatment and disposal, Zinc, Tires, Incorporation by Reference, Can surface coating, Sulfuric acid plants, Industrial organic chemicals.

Dated: September 30, 1983.

William D. Ruckelshaus,

Administrator.

PART 60—[AMENDED]

40 CFR Part 60 is amended as follows:

1. By adding paragraph (f) to § 60.7 of Subpart A—General Provisions as follows:

§ 60.7 Notification and recordkeeping.

* * * * *

(f) Individual subparts of this part may include specific provisions which clarify or make inapplicable the provisions set forth in this section.

(Sec. 111, 114, 301(a) of the Clean Air Act, as amended (42 U.S.C. 7411) 7601(a)))

2. By adding paragraph (f) to § 60.11 of Subpart A—General Provisions as follows:

§ 60.11 Compliance with standards and maintenance requirements.

* * * * *

(f) Special provisions set forth under an applicable subpart of this part shall supersede any conflicting provisions of this section.

(Sec. 111, 301(a) of the Clean Air Act, as amended (42 U.S.C. 7411, 7601(a)))

3. By adding paragraphs (a)(34), (a)(35), (a)(36), (a)(37), (a)(38), and (a)(39) to § 60.17 of Subpart A—General Provisions as follows:

§ 60.17 Incorporations by reference.

* * * * *

(a) * * *

(34) ASTM, E169-63 (Reapproved 1977), General Techniques of Ultraviolet Quantitative Analysis, IBR approved for § 60.485(d).

(35) ASTM E168-67 (Reapproved 1977), General Techniques of Infrared Quantitative Analysis, IBR approved for § 60.485(d).

(36) ASTM E260-73, General Gas Chromatography Procedures, IBR approved for § 60.485(d).

(37) ASTM D2879-70, Vapor Pressure—Temperature Relationship and Initial Decomposition Temperature of Liquids by Isoteniscope, IBR approved for § 60.485(e).

(38) ASTM D2382-76, Heat of Combustion of Hydrocarbon Fuels by Bomb Calorimeter (High-Precision Method), IBR approved for § 60.485(g).

(39) ASTM D2504-67 (Reapproved 1977), Noncondensable Gases in C_3 and Lighter Hydrocarbon Products by Gas Chromatography, IBR approved for § 60.485(g).

(Sec. 111, 114, 301(a) of the Clean Air Act, as amended (42 U.S.C. 7411) 7601(a))).

4. By adding a new Subpart VV as follows:

Subpart VV—Standards of Performance for Equipment Leaks of VOC in the Synthetic Organic Chemicals Manufacturing Industry

Sec.
60.480 Applicability and designation of affected facility.
60.481 Definitions.
60.482-1 Standards: General.
60.482-2 Standards: Pumps in light liquid service.
60.482-3 Standards: Compressors.
60.482-4 Standards: Pressure relief devices in gas/vapor service.
60.482-5 Standards: Sampling connection systems.
60.482-6 Standards: Open-ended valves or lines.
60.482-7 Standards: Valves in gas/vapor and in light liquid service.
60.482-8 Standards: Pumps and valves in heavy liquid service, pressure relief devices in light liquid or heavy liquid service, and flanges and other connectors.
60.482-9 Standards: Delay of repair.
60.482-10 Standards: Closed vent systems and control devices.
60.483-1 Alternative standards for valves—allowable percentage of valves leaking.
60.483-2 Alternative standards for valves—skip period leak detection and repair.
60.484 Equivalence of means of emission limitation.
60.485 Test methods and procedures.
60.486 Recordkeeping requirements.
60.487 Reporting requirements.
60.488 [Reserved]
60.489 List of chemicals produced by affected facilities.

Authority: Sec. 111 and 301(a) of the Clean Air Act, as amended (42 U.S.C. 7411, 7601(a)), and additional authority as noted below.

Subpart VV—Standards of Performance for Equipment Leaks of VOC in the Synthetic Organic Chemicals Manufacturing Industry

§ 60.480 Applicability and designation of affected facility.

(a)(1) The provisions of this subpart apply to affected facilities in the synthetic organic chemicals manufacturing industry.

(2) The group of all equipment (defined in § 60.481) within a process unit is an affected facility.

(b) Any affected facility under paragraph (a) of this section that commences construction or modification after January 5, 1981, shall be subject to the requirements of this subpart.

(c) Addition or replacement of equipment for the purpose of process improvement which is accomplished without a capital expenditure shall not by itself be considered a modification under this subpart.

(d)(1) If an owner or operator applies for one of one of the exemptions in this paragraph, then the owner or operator shall maintain records as required in § 60.486(h).

(2) Any affected facility that has the design capacity to produce less than 1,000 Mg/yr is exempt from § 60.482.

(3) If an affected facility produces heavy liquid chemicals only from heavy liquid feed or raw materials, then it is exempt from § 60.482.

(4) Any affected facility that produces beverage alcohol is exempt from § 60.482.

(5) Any affected facility that has no equipment in VOC service is exempt from § 60.482.

§ 60.481 Definitions.

As used in this subpart, all terms not defined herein shall have the meaning given them in the Act or in Subpart A of Part 60, and the following terms shall have the specific meanings given them.

"Closed vent system" means a system that is not open to the atmosphere and that is composed of piping, connections, and, if necessary, flow inducing devices that transport gas or vapor from a piece or pieces of equipment to a control device.

"Connector" means flanged, screwed, welded, or other joined fittings used to connect two pipe lines or a pipe line and a piece of process equipment.

"Control device" means an enclosed combustion device, vapor recovery system, or flare.

"Distance piece" means an open or enclosed casing through which the piston rod travels, separating the compressor cylinder from the crankcase.

"Equipment" means each pump, compressor, pressure relief device, sampling connection system, open-ended valve or line, valve, and flange or other connector in VOC service and any devices or systems required by this subpart.

"First attempt at repair" means to take rapid action for the purpose of stopping or reducing leakage of organic material to atmosphere using best practices.

"In gas/vapor service" means that the piece of equipment contains process fluid that is in the gaseous state at operating conditions.

"In heavy liquid service" means that the piece of equipment is not in gas/vapor service or in light liquid service.

"In light liquid service" means that the piece of equipment contains a liquid that meets the conditions specified in § 60.485(e).

"Liquids dripping" means any visible leakage from the seal including spraying, misting, clouding, and ice formation.

"Open-ended valve or line" means any valve, except safety relief valves, having one side of the valve seat in contact with process fluid and one side open to the atmosphere, either directly or through open piping.

"Pressure release" means the emission of materials resulting from system pressure being greater than set pressure of the pressure relief device.

"Process improvement" means routine changes made for safety and occupational health requirements, for energy savings, for better utility, for ease of maintenance and operation, for correction of design deficiencies, for bottleneck removal, for changing product requirements, or for environmental control.

"Process unit" means components assembled to produce, as intermediate or final products, one or more of the chemicals listed in § 60.489 of this part. A process unit can operate independently if supplied with sufficient feed or raw materials and sufficient storage facilities for the product.

"Process unit shutdown" means a work practice or operational procedure that stops production from a process unit or part of a process unit. An unscheduled work practice or operational procedure that stops production from a process unit or part of a process unit for less than 24 hours is not a process unit shutdown. The use of spare equipment and technically feasible bypassing of equipment without stopping production are not process unit shutdowns.

"Quarter" means a 3-month period; the first quarter concludes on the last day of the last full month during the 180 days following initial startup.

"Repaired" means that equipment is adjusted, or otherwise altered, in order to eliminate a leak as indicated by one of the following: an instrument reading or 10,000 ppm or greater, indication of liquids dripping, or indication by a sensor that a seal or barrier fluid system has failed.

"Sensor means a device that measures a physical quantity or the change in a physical quantity such as temperature, pressure, flow rate, pH, or liquid level.

"In-situ sampling systems" means nonextractive samplers or in-line samplers.

"Synthetic organic chemicals manufacturing industry" means the industry that produces, as intermediates or final products, one or more of the chemicals listed in § 60.489.

"In vacuum service" means that equipment is operating at an internal pressure which is at least 5 kilopascals (kPa) below ambient pressure.

"Volatile organic compounds" or VOC means, for the purposes of this subpart, any reactive organic compounds as defined in § 60.2 Definitions.

"In VOC Service" means that the piece of equipment contains or contacts a process fluid that is at least 10 percent VOC by weight. (The provisions of § 60.485(d) specify how to determine that a piece of equipment is not in VOC service.)

§ 60.482-1 Standards: General.

(a) Each owner or operator subject to the provisions of this subpart shall demonstrate compliance with the requirements of § 60.482-1 to § 60.482-10 for all equipment within 180 days of initial startup.

(b) Compliance with § 60.482-1 to § 60.482-10 will be determined by review of records and reports, review of performance test results, and inspection using the methods and procedures specified in § 60.485.

(c)(1) An owner or operator may request a determination of equivalence of a means of emission limitation to the requirements of § 60.482-2, -3, -5, -6, -7, -8, and -10 as provided in § 60.484.

(2) If the Administrator makes a determination that a means of emission limitation is at least equivalent to the requirements of § 60.482-2, -3, -5, -6, -7, -8, or -10, an owner or operator shall comply with the requirements of that determination.

(d) Equipment that is in vacuum service is excluded from the requirements of § 60.482-2 to § 60.482-10 if it is identified as required in § 60.486(e)(4).

§ 60.482-2 StandardsD Pumps in light liquid service.

(a)(1) Each pump in light liquid service shall be monitored monthly to detect leaks by the methods specified in §60.485(b), except as provided in § 60.482-1(c) and paragraphs (d), (e), and (f) of this section.

(2) Each pump in light liquid service shall be checked by visual inspection each calendar week for indications of liquids dripping from the pump seal.

(b)(1) If an instrument reading of 10,000 ppm or greater is measured, a leak is detected.

(2) If there are indications of liquids dripping from the pump seal, a leak is detected.

(c)(1) When a leak is detected, it shall be repaired as soon as practicable, but not later than 15 calendar days after it is detected, except as provided in § 60.482-9.

(2) A first attempt at repair shall be made no later than 5 calendar days after each leak is detected.

(d) Each pump equipped with a dual mechanical seal system that includes a barrier fluid system is exempt from the requirements of paragraph (a), provided the following requirements are met:

(1) Each dual mechanical seal system is:

(i) Operated with the barrier fluid at a pressure that is at all times greater than the pump stuffing box pressure; or

(ii) Equipment with a barrier fluid degassing reservoir that is connected by a closed vent system to a control device that complies with the requirements of § 60.482-10; or

(iii) Equipped with a system that purges the barrier fluid into a process stream with zero VOC emissions to the atmosphere.

(2) The barrier fluid system is in heavy liquid service or is not in VOC service.

(3) Each barrier fluid system is equipped with a sensor that will detect failure of the seal system, the barrier fluid system, or both.

(4) Each pump is checked by visual inspection, each calendar week, for indications of liquids dripping from the pump seals.

(5)(i) Each sensor as described in paragraph (d)(3) is checked daily or is equipped with an audible alarm, and

(ii) The owner or operator determines, based on design considerations and operating experience, a criterion that indicates failure of the seal system, the barrier fluid system, or both.

(6)(i) If there are indications of liquids dripping from the pump seal or the sensor indicates failure of the seal system, the barrier fluid system, or both based on the criterion determined in paragraph (d)(5)(ii), a leak is detected.

(ii) When a leak is detected, it shall be repaired as soon as practicable, but not later than 15 calendar days after it is detected, except as provided in § 60.482-9.

(iii) A first attempt at repair shall be made no later than 5 calendar days after each leak is detected.

(e) Any pump that is designated, as described in § 60.486(e) (1) and (2), for no detectable emission, as indicated by an instrument reading of less than 500 ppm above background, is exempt from the requirements of paragraphs (a), (c), and (d) if the pump:

(1) Has no externally actuated shaft penetrating the pump housing.

(2) Is demonstrated to be operating with no detectable emissions as indicated by an instrument reading of less than 500 ppm above background as measured by the methods specified in § 60.485(c), and

(3) Is tested for compliance with paragraph (e)(2) initially upon designation, annually, and at other times requested by the Administrator.

(f) If any pump is equipped with a closed vent system capable of capturing and transporting any leakage from the seal or seals to a control device that complies with the requirements of § 60.482-10, it is exempt from the paragraphs (a)-(e).

§ 60.482-3 Compressors.

(a) Each compressor shall be equipped with a seal system that includes a barrier fluid system and that prevents leakage of VOC to the atmosphere, except as provided in § 60.482-1(c) and paragraph (h) and (i) of this section.

(b) Each compressor seal system as required in paragraph (a) shall be:

(1) Operated with the barrier fluid at a pressure that is greater than the compressor stuffing box pressure; or

(2) Equipped with a barrier fluid system that is connected by a closed vent system to a control device that complies with the requirements of § 60.482-10; or

(3) Equipped with a system that purges the barrier fluid into a process stream with zero VOC emissions to the atmosphere.

(c) The barrier fluid system shall be in heavy liquid service or shall not be in VOC service.

(d) Each barrier fluid system as described in paragraph (a) shall be equipped with a sensor that will detect failure of the seal system, barrier fluid system, or both.

(e)(1) Each sensor as required in paragraph (d) shall be checked daily or shall be equipped with an audible alarm.

(2) The owner or operator shall determine, based on design considerations and operating experience, a criterion that indicates failure of the seal system, the barrier fluid system, or both.

(f) If the sensor indicates failure of the seal system, the barrier system, or both based on the criterion determined under paragraph (e)(2), a leak is detected.

(g)(1) When a leak is detected, it shall be repaired as soon as practicable, but not later than 15 calendar days after it is detected, except as provided in § 60.482-9.

(2) A first attempt at repair shall be made no later than 5 calendar days after each leak is detected.

(h) A compressor is exempt from the requirements of paragraphs (a) and (b), if it is equipped with a closed vent system capable of capturing and transporting any leakage from the seal to a control device that complies with the requirements of § 60.482-10, except as provided in § 60.482-3(i).

(i) Any compressor that is designated, as described in § 60.486(e) (1) and (2), for no detectable emissions, as indicated by an instrument reading of less than 500 ppm above background, is exempt from the requirements of paragraphs (a)-(h) if the compressor:

(1) Is demonstrated to be operating with no detectable emissions, as indicated by an instrument reading of less than 500 ppm above background, as measured by the methods specified in § 60.485(c); and

(2) Is tested for compliance with paragraph (i)(1) initially upon designation, annually, and at other times requested by the Administrator.

(j) Any existing reciprocating compressor in a process unit which becomes an affected facility under provisions of § 60.14 or 60.15 is exempt from § 60.482 (a), (b), (c), (d), (e), and (h), provided the owner or operator demonstrates that recasting the distance piece or replacing the compressor are the only options available to bring the compressor into compliance with the provisions of § 60.4823 (a), (b), (c), (d), (e), and (h).

§ 60.482-4 Standards: Pressure relief devices in gas/vapor service.

(a) Except during pressure releases, each pressure relief device in gas/vapor service shall be operated with no detectable emissions, as indicated by an instrument reading of less than 500 ppm above background, as determined by the methods specified in § 60.485(c).

(b)(1) After each pressure release, the pressure relief device shall be returned to a condition of no detectable emissions, as indicated by an instrument reading of less than 500 ppm above background, as soon as practicable, but no later than 5 calendar days after the pressure release, except as provided in § 60.482-9.

(2) No later than 5 calendar days after the pressure release, the pressure relief device shall be monitored to confirm the conditions of no detectable emissions, as indicated by an instrument reading of less than 500 ppm above background, by the methods specified in § 60.485(c).

(c) Any pressure relief device that is equipped with a closed vent system capable of capturing and transporting leakage through the pressure relief device to a control device as described in § 60.482-10 is exempted from the requirements of paragraphs (a) and (b).

§ 60.482-5 Standards: Sampling connection systems.

(a) Each sampling connection system shall be equipped with a closed purge system or closed vent system, except as provided in § 60.482-1(c).

(b) Each closed purge system or closed vent system as required in paragraph (a) shall:

(1) Return the purged process fluid directly to the process line with zero VOC emissions to the atmosphere; or

(2) Collect and recycle the purged process fluid with zero VOC emissions to the atmosphere; or

(3) Be designed and operated to capture and transport all the purged process fluid to a control device that complies with the requirements of § 60.482-10.

(c) In-situ sampling systems are exempt from paragraphs (a) and (b).

§ 60.482-6 Standards: Open-ended valves or lines.

(a)(1) Each open-ended valve or line shall be equipped with a cap, blind flange, plug, or a second valve, except as provided in § 60.482-1(c).

(2) The cap, blind flange, plug, or second valve shall seal the open end at all times except during operations requiring process fluid flow through the open-ended valve or line.

(b) Each open-ended valve or line equipped with a second valve shall be operated in a manner such that the valve on the process fluid end is closed before the second valve is closed.

§ 60.482-7 Standards: Valves in gas/vapor service in light liquid service.

(a) Each valve shall be monitored monthly to detect leaks by the methods specified in § 60.485(b) and shall comply with paragraphs (b)-(e), except as provided in paragraphs (f), (g), and (h), § 60.483-1, 2, and § 60.482-1(c).

(b) If an instrument reading of 10,000 ppm or greater is measured, a leak is detected.

(c)(1) Any valve for which a leak is not detected for 2 successive months may be monitored the first month of every quarter, beginning with the next quarter, until a leak is detected.

(2) If a leak is detected, the valve shall be monitored monthly until a lead is not detected for 2 successive months.

(d)(1) When a leak is detected, it shall be repaired as soon as practicable, but no later than 15 calendar days after the leak is detected, except as provided in § 60.482-9.

(2) A first attempt at repair shall be made no later than 5 calendar days after each leak is detected.

(e) First attempts at repair include, but are not limited to, the following best practices where practicable:

(1) Tightening of bonnet bolts;

(2) Replacement of bonnet bolts;

(3) Tightening of packing gland nuts;

(4) Injection of lubricant into lubricated packing.

(f) Any valve that is designated, as described in § 60.486(e)(2), for no detectable emissions, as indicated by an instrument reading of less than 500 ppm above background, is exempt from the requirements of paragraph (a) if the valve:

(1) Has no external actuating mechanism in contact with the process fluid,

(2) Is operated with emissions less than 500 ppm above background as determined by the method specified in § 60.485(c), and

(3) Is tested for compliance with paragraph (f)(2) initially upon designation, annually, and at other times requested by the Administrator.

(g) Any valve that is designated, as described in § 60.486(f)(1), as an unsafe-to-monitor valve is exempt from the requirements of paragraph (a) if:

(1) The owner or operator of the valve demonstrates that the valve is unsafe to monitor because monitoring personnel would be exposed to an immediate danger as a consequence of complying with paragraph (a), and

(2) The owner or operator of the valve adheres to a written plan that requires monitoring of the valve as frequently as practicable during safe-to-monitor times.

(h) Any valve that is designated, as described in § 60.486(f)(2), as a difficult-to-monitor valve is exempt from the requirements of paragraph (a) if:

(1) The owner or operator of the valve demonstrates that the valve cannot be monitored without elevating the monitoring personnel more than 2 meters above a support surface.

(2) The process unit within which the valve is located becomes an affected facility through § 60.14 or § 60.15, and

(3) The owner or operator of the valve follows a written plan that requires monitoring of the valve at least once per calendar year.

§ 60.482-8 Standards: Pumps and valves in heavy liquid service, pressure relief devices in light liquid or heavy liquid service, and flanges and other connectors.

(a) Pumps and valves in heavy liquid service, pressure relief devices in light liquid or heavy liquid service, and flanges and other connectors shall be monitored within 5 days by the method specified in § 60.485(b) if evidence of a potential leak is found by visual, audible, olfactory, or any other detection method.

(b) If an instrument reading of 10,000 ppm or greater is measured, a leak is detected.

(c)(1) When a leak is detected, it shall be repaired as soon as practicable, but not later than 15 calendar days after it is detected, except as provided in § 60.482-9.

(2) The first attempt at repair shall be made no later than 5 calendar days after each leak is detected.

(d) First attempts at repair include, but are not limited to, the best practices described under § 60.482-7(e).

§ 60.482-9 Standards: Delay of repair.

(a) Delay of repair of equipment for which leaks have been detected will be allowed if the repair is technically infeasible without a process unit shutdown. Repair of this equipment shall occur before the end of the next process unit shutdown.

(b) Delay of repair of equipment will be allowed for equipment which is isolated from the process and which does not remain in VOC service.

(c) Delay of repair for valves will be allowed if:

(1) The owner or operator demonstrates that emissions of purged material resulting from immediate repair are greater than the fugitive emissions likely to result from delay of repair, and

(2) When repair procedures are effected, the purged material is collected and destroyed or recovered in a control device complying with § 60.482-10.

(d) Delay of repair for pumps will be allowed if:

(1) Repair requires the use of a dual mechanical seal system that includes a barrier fluid system, and

(2) Repair is completed as soon as practicable, but not later than 6 months after the leak was detected.

(e) Delay of repair beyond a process unit shutdown will be allowed for a valve, if valve assembly replacement is necessary during the process unit shutdown, valve assembly supplies have been depleted, and valve assembly supplies had been sufficiently stocked before the supplies were depleted. Delay of repair beyond the next process unit shutdown will not be allowed unless the next process unit shutdown occurs sooner than 6 months after the first process unit shutdown.

§ 60.482-10 Standards: Closed vent systems and control devices.

(a) Owners or operators of closed vent systems and control devices used to comply with provisions of this subpart

shall comply with the provisions of this section.

(b) Vapor recovery systems (for example, condensers and adsorbers) shall be designed and operated to recover the VOC emissions vented to them with an efficiency of 95 percent or greater.

(c) Enclosed combustion devices shall be designed and operated to reduce the VOC emissions vented to them with an efficiency of 95 percent or greater, or to provide a minimum residence time of 0.75 seconds at a minimum temperature of 816°C.

(d)(1) Flares shall be designed for and operated with no visible emissions as determined by the methods specified in § 60.485(g), except for periods not to exceed a total of 5 minutes during any 2 consecutive hours.

(2) Flares shall be operated with a flame present at all times, as determined by the methods specified in § 60.485(g).

(3) Flares shall be used only with the net heating value of the gas being combusted being 11.2 MJ/scm (300 Btu/scf) or greater if the flare is steam-assisted or air-assisted; or with the net heating value of the gas being combusted being 7.45 MJ/scm or greater if the flare is nonassisted. The net heating value of the gas being combusted shall be determined by the methods specified in § 60.485(g).

(4) Steam-assisted and nonassisted flares shall be designed for and operated with an exit velocity, as determined by the methods specified in § 60.485(g)(4), less than 18 m/sec (60 ft/sec).

(5) Flares used to comply with this subpart shall be steam-assisted, air-assisted, or nonassisted.

(6) Air-assisted flares shall be designed and operated with an exit velocity less than the velocity, V_{max}, as determined by the methods specified in § 60.485(g)(5).

(e) Owners or operators of control devices used to comply with the provisions of this subpart shall monitor these control devices to ensure that they are operated and maintained in conformance with their designs.

(f)(1) Closed vent systems shall be designed and operated with no detectable emissions, as indicated by an instrument reading of less than 500 ppm above background and visual inspections, as determined by the methods specified in § 60.485(c).

(2) Closed vent systems shall be monitored to determine compliance with this section initially in accordance with § 60.8, annually and at other times requested by the Administrator.

(g) Closed vent systems and control devices used to comply with provisions of this subpart shall be operated at all times when emissions may be vented to them.

§ 60.483-1 Alternative standards for valves—allowable percentage of valves leaking.

(a) An owner or operator may elect to comply with an allowable percentage of valves leaking of equal to or less than 2.0 percent.

(b) The following requirements shall be met if an owner or operator wishes to comply with an allowable percentage of valves leaking:

(1) An owner or operator must notify the Administrator that the owner or operator has elected to comply with the allowable percentage of valves leaking before implementing this alternative standard, as specified in § 60.487(b).

(2) A performance test as specified in paragraph (c) of this section shall be conducted initially upon designation, annually, and at other times requested by the Administrator.

(3) If a valve leak is detected, it shall be repaired in accordance with § 60.482-7(d) and (e).

(c) Performance tests shall be conducted in the following manner:

(1) All valves in gas/vapor and light liquid service within the affected facility shall be monitored within 1 week by the methods specified in § 60.485(b).

(2) If an instrument reading of 10,000 ppm or greater is measured, a leak is detected.

(3) The leak percentage shall be determined by dividing the number of valves for which leaks are detected by the number of valves in gas/vapor and light liquid service within the affected facility.

(d) Owners and operators who elect to comply with this alternative standard shall not have an affected facility with a leak percentage greater than 2.0 percent.

§ 60.483-2 Alternative standards for valves—skip period leak detection and repair.

(a)(1) An owner or operator may elect to comply with one of the alternative work practices specified in paragraphs (b) (2) and (3) of this section.

(2) An owner or operator must notify the Administrator before implementing one of the alternative work practices, as specified in § 60.487(b).

(b)(1) An owner or operator shall comply initially with the requirements for valves in gas/vapor service and valves in light liquid service, as described in § 60.482-7.

(2) After 2 consecutive quarterly leak detection periods with the percent of valves leaking equal to or less than 2.0, an owner or operator may begin to skip 1 of the quarterly leak detection periods for the valves in gas/vapor and light liquid service.

(3) After 5 consecutive quarterly leak detection periods with the percent of valves leaking equal to or less than 2.0, an owner or operator may begin to skip 3 of the quarterly leak detection periods for the valves in gas/vapor and light liquid service.

(4) If the percent of valves leaking is greater than 2.0, the owner or operator shall comply with the requirements as described in § 60.482-7 but can again elect to use this section.

(5) The percent of valves leaking shall be determined by dividing the sum of valves found leaking during current monitoring and valves for which repair has been delayed by the total number of valves subject to the requirements of § 60.483-2.

(6) An owner or operator must keep a record of the percent of valves found leaking during each leak detection period.

§ 60.484 Equivalence of means of emission limitation.

(a) Each owner or operator subject to the provisions of this subpart may apply to the Administrator for determination of equivalance for any means of emission limitation that achieves a reduction in emissions of VOC at least equivalent to the reduction in emissions of VOC achieved by the controls required in this subpart.

(b) Determination of equivalence to the equipment, design, and operational requirements of this subpart will be evaluated by the following guidelines:

(1) Each owner or operator applying for an equivalence determination shall be responsible for collecting and verifying test data to demonstrate equivalence of means of emission limitation.

(2) The Administrator will compare test data for the means of emission limitation to test data for the equipment, design, and operational requirements.

(3) The Administrator may condition the approval of equivalence on requirements that may be necessary to assure operation and maintenance to achieve the same emission reduction as the equipment, design, and operational requirements.

(c) Determination of equivalence to the required work practices in this subpart will be evaluated by the following guidelines:

(1) Each owner or operator applying for a determination of equivalence shall be responsible for collecting and verifying test data to demonstrate

equivalence of an equivalent means of emission limitation.

(2) For each affected facility for which a determination of equivalence is requested, the emission reduction achieved by the required work practice shall be demonstrated.

(3) For each affected facility, for which a determination of equivalence is requested, the emission reduction achieved by the equivalent means of emission limitation shall be demonstrated.

(4) Each owner or operator applying for a determination of equivalence shall commit in writing to work practice(s) that provide for emission reductions equal to or greater than the emission reductions achieved by the required work practice.

(5) The Administrator will compare the demonstrated emission reduction for the equivalent means of emission limitation to the demonstrated emission reduction for the required work practices and will consider the commitment in paragraph (c)(4).

(6) The Administrator may condition the approval of equivalence on requirements that may be necessary to assure operation and maintenance to achieve the same emission reduction as the required work practice.

(d) An owner or operator may offer a unique approach to demonstrate the equivalence of any equivalent means of emission limitation.

(e)(1) After a request for determination of equivalence is received, the Administrator will publish a notice in the **Federal Register** and provide the opportunity for public hearing if the Administrator judges that the request may be approved.

(2) After notice and opportunity for public hearing, the Administrator will determine the equivalence of a means of emission limitation and will publish the determination in the **Federal Register.**

(3) Any equivalent means of emission limitations approved under this section shall constitute a required work practice, equipment, design, or operational standard within the meaning of Section 111(h)(1) of the Clean Air Act.

(f)(1) Manufacturers of equipment used to control equipment leaks of VOC may apply to the Administrator for determination of equivalence for any equivalent means of emission limitation that achieves a reduction in emissions of VOC achieved by the equipment, design, and operational requirements of this subpart.

(2) The Administrator will make an equivalence determination according to the provisions of paragraphs (b), (c), (d), and (e).

§ 60.485 Test methods and procedures.

(a) Each owner or operator subject to the provisions of this subpart shall comply with the test method and procedure requirements provided in this section.

(b) Monitoring, as required in §§ 60.482, 60.483, and 60.484, shall comply with the following requirements:

(1) Monitoring shall comply with Reference Method 21.

(2) The detection instrument shall meet the performance criteria of Reference Method 21.

(3) The instrument shall be calibrated before use on each day of its use by the methods specified in Method 21.

(4) Calibration gases shall be:

(i) Zero air (less than 10 ppm of hydrocarbon in air); and

(ii) A mixture of methane or n-hexane and air at a concentration of approximately, but less than, 10,000 ppm methane or n-hexane.

(5) The instrument probe shall be traversed around all potential leak interfaces as close to the interface as possible as described in Reference Method 21.

(c) When equipment is tested for compliance with no detectable emissions as required in § 60.482-2(e), -3(i), -4, -7(f), and -10(e), the test shall comply with the following requirements:

(1) The requirements of paragraphs (b)(1)-(4) shall apply.

(2) The background level shall be determined, as set forth in Reference Method 21.

(3) The instrument probe shall be traversed around all potential leak interfaces as close to the interface as possible as described in Reference Method 21.

(4) The arithmetic difference between the maximum concentration indicated by the instrument and the background level is compared with 500 ppm for determining compliance.

(d)(1) Each piece of equipment within a process unit is presumed to be in VOC service unless an owner or operator demonstrates that the piece of equipment is not in VOC service. For a piece of equipment to be considered not in VOC service, it must be determined that the percent VOC content can be reasonably expected never to exceed 10 percent by weight. For purposes of determining the percent VOC content in the process fluid that is contained in or contacts equipment, procedures that conform to the general methods described in ASTM E-260, E-168, E-169 (incorporated by reference as specified in § 60.17) shall be used.

(2) If an owner or operator decides to exclude non-reactive organic compounds from the total quantity of organic compounds in determining the percent VOC content of the process fluid, the exclusion will be allowed if:

(i) Those substances excluded are those considered as having negligible photochemical reactivity by the Administrator; and

(ii) The owner or operator demonstrates that the percent organic content, excluding non-reactive organic compounds, can be reasonably expected never to exceed 10 percent by weight.

(3)(i) An owner or operator may use engineering judgment rather than the procedures in paragraphs (d) (1) and (2) of this section to demonstrate that the percent VOC content does not exceed 10 percent by weight, provided that the engineering judgment demonstrates that the VOC content clearly does not exceed 10 percent by weight. When an owner or operator and the Administrator do not agree on whether a piece of equipment is not in VOC service, however, the procedures in paragraphs (d) (1) and (2) shall be used to resolve the disagreement.

(ii) If an owner or operator determines that a piece of equipment is in VOC service, the determination can be revised only after following the procedures in paragraphs (d) (1) and (2).

(e) Equipment is in light liquid service if the following conditions apply:

(1) The vapor pressure of one or more of the components is greater than 0.3 kPa at 20° C. Vapor pressures may be obtained from standard reference texts or may be determined by ASTM D-2879 (incorporated by reference as specified in § 60.17).

(2) The total concentration of the pure components having a vapor pressure greater than 0.3 kPa at 20° C is equal to or greater than 20 percent by weight; and

(3) The fluid is a liquid at operating conditions.

(f) Samples used in conjunction with paragraphs (d), (e), and (g) shall be representative of the process fluid that is contained in or contacts the equipment or the gas being combusted in the flare.

(g)(1) Reference Method 22 shall be used to determine the compliance of flares with the visible emission provisions of this subpart.

(2) The presence of a flare pilot flame shall be monitored using a thermocouple or any other equivalent device to detect the presence of a flame.

(3) The net heating value of the gas being combusted in a flare shall be calculated using the following equation:

$$H_T = K\left(\frac{n}{\sum_{i=1} C_i H_i}\right)$$

Where:

H_T = Net heating value of the sample, MJ/scm; where the net enthalpy per mole of offgas is based on combustion at 25°C and 760 mm Hg, but the standard temperature for determining the volume corresponding to one mole is 20°.

$$K = \text{Constant, } 1.740 \times 10^7 \left(\frac{1}{\text{ppm}}\right)\left(\frac{\text{g mole}}{\text{scm}}\right)\left(\frac{\text{MJ}}{\text{kcal}}\right)$$

where

standard temperature for $\frac{\text{g mole}}{\text{scm}}$ is 20°C.

C_i = Concentration of sample component i in ppm, as measured by Reference Method 18 and ASTM D2504-67 (reapproved 1977) (incorporated by reference as specified in § 60.17).

H_i = Net heat of combustion of sample component i, kcal/g mole. The heats of combustion may be determined using ASTM D2382-76 (incorporated by reference as specified in § 60.17) if published values are not available or cannot be calculated.

(4) The actual exit velocity of a flare shall be determined by dividing the volumetric flowrate (in units of standard temperature and pressure), as determined by Reference Method 2, 2A, 2C, or 2D as appropriate; by the unobstructed (free) cross sectional area of the flare tip.

(5) The maximum permitted velocity, V_{max}, for air-assisted flares shall be determined by the following equation:

$$V_{max} = 8.706 + 0.7084(H_T)$$

V_{max} = Maximum permitted velocity, m/sec.
8.706 = Constant.
0.7084 = Constant.
H_T = The net heating value as determined in paragraph (g)(4).

(Sec. 114 of the Clean Air Act as amended (42 U.S.C. 7414))

§ 60.486 Recordkeeping requirements.

(a)(1) Each owner or operator subject to the provisions of this subpart shall comply with the recordkeeping requirements of this section.

(2) An owner or operator of more than one affected facility subject to the provisions of this subpart may comply with the recordkeeping requirements for these facilities in one recordkeeping system if the system identifies each record by each facility.

(b) When each leak is detected as specified in § 60.482-2, -3, -7, -8, and § 60.483-2, the following requirements apply:

(1) A weatherproof and readily visible identification, marked with the equipment identification number, shall be attached to the leaking equipment.

(2) The identification on a valve may be removed after it has been monitored for 2 successive months as specified in § 60.482-7(c) and no leak has been detected during those 2 months.

(3) The identification on equipment except on a valve, may be removed after it has been repaired.

(c) When each leak is detected as specified in § 60.482-2, -3, -7, -8, and § 60.483-2, the following information shall be recorded in a log and shall be kept for 2 years in a readily accessible location:

(1) The instrument and operator identification numbers and the equipment identification number.

(2) The date the leak was detected and the dates of each attempt to repair the leak.

(3) Repair methods applied in each attempt to repair the leak.

(4) "Above 10,000" if the maximum instrument reading measured by the methods specified in § 60.485(a) after each repair attempt is equal to or greater than 10,000 ppm.

(5) "Repair delayed" and the reason for the delay if a leak is not repaired within 15 calendar days after discovery of the leak.

(6) The signature of the owner or operator (or designate) whose decision it was that repair could not be effected without a process shutdown.

(7) The expected date of successful repair of the leak if a leak is not repaired within 15 days.

(8) Dates of process unit shutdown that occur while the equipment is unrepaired.

(9) The date of successful repair of the leak.

(d) The following information pertaining to the design requirements for closed vent systems and control devices described in § 60.482-10 shall be recorded and kept in a readily accessible location:

(1) Detailed schematics, design specifications, and piping and instrumentation diagrams.

(2) The dates and descriptions of any changes in the design specifications.

(3) A description of the parameter or parameters monitored, as required in § 60.482-10(e), to ensure that control devices are operated and maintained in conformance with their design and an explanation of why that parameter (or parameters) was selected for the monitoring.

(4) Periods when the closed vent systems and control devices required in § 60.482-2, -3, -4, and -5 are not operated as designed, including periods when a flare pilot light does not have a flame.

(5) Dates of startups and shutdowns of the closed vent systems and control devices required in § 60.482-2, -3, -4, and -5.

(e) The following information pertaining to all equipment subject to the requirements in § 60.482-1 to -10 shall be recorded in a log that is kept in a readily accessible location:

(1) A list of identification numbers for equipment subject to the requirements of this subpart.

(2)(i) A list of identification numbers for equipment that are designated for no detectable emissions under the provisions of § 60.482-2(e), -3(i) and -7(f).

(ii) The designation of equipment as subject to the requirements of § 60.482-2(e), -3(i), or -7(f) shall be signed by the owner or operator.

(3) A list of equipment identification numbers for pressure relief devices required to comply with § 60.482-4.

(4)(i) The dates of each compliance test as required in § 60.482-2(e), -3(i), -4, and -7(f):

(ii) The background level measured during each compliance test.

(iii) The maximum instrument reading measured at the equipment during each compliance test.

(5) A list of identification numbers for equipment in vacum service.

(f) The following information pertaining to all valves subject to the requirements of § 60.482-7 (g) and (h) shall be recorded in a log that is kept in a readily accessible location:

(1) A list of identification numbers for valves that are designated as unsafe-to-monitor, an explanation for each valve stating why the valve is unsafe-to-monitor, and the plan for monitoring each valve.

(2) A list of identification numbers for valves that are designated as difficult-to-monitor, an explanation for each valve stating why the valve is difficult-to-monitor, and the schedule for monitoring each value.

(g) The following information shall be recorded for valves complying with § 60.483-2:

(1) A schedule of monitoring

(2) The percent of valves found leaking during each monitoring period.

(h) The following information shall be recorded in a log that is kept in a readily accessible location:

(1) Design criterion required in § 60.482-2(d)(5) and § 60.482-3(e)(2) and explanation of the design criterion; and

(2) Any changes to this criterion and the reasons for the changes.

(i) The following information shall be recorded in a log that is kept in a readily accessible location for use in determining exemptions as provided in § 60.480(d):

(1) An analysis demonstrating the design capacity of the affected facility,

(2) A statement listing the feed or raw materials and products from the affected facilities and an analysis demonstrating whether these chemicals are heavy liquids or beverage alcohol, and

(3) An analysis demonstrating that equipment is not in VOC service.

(j) Information and data used to demonstrate that a piece of equipment is not in VOC service shall be recorded in a log that is kept in a readily accessible location.

(k) The provisions of §§ 60.7 (b) and (d) do not apply to affected facilities subject to this subpart.

(Sec. 114 of the Clean Air Act as amended (42 U.S.C. 7414))

(Approved by the Office of Management and Budget under the control number 2060-0012)

§ 60.487 Reporting Requirements.

(a) Each owner or operator subject to the provisions of this subpart shall submit semiannual reports to the Administrator beginning six months after the initial start up date.

(b) The initial semiannual report to the Administrator shall include the following information:

(1) Process unit identification.

(2) Number of valves subject to the requirements of § 60.482-7, excluding those valves designated for no detectable emissions under the provisions of § 60.482-7(f).

(3) Number of pumps subject to the requirements of § 60.482-2, excluding those pumps designated for no detectable emissions under the provisions of § 60.482-2(e) and those pumps complying with § 60.482-2(f).

(4) Number of compressors subject to the requirements of § 60.482-3, excluding those compressors designated for no detectable emissions under the provisions of § 60.482-3(i) and those compressors complying with § 60.482-3(h).

(c) All semiannual reports to the Administrator shall include the following information, summarized from the information in § 60.486:

(1) Process unit identification.

(2) For each month during the semiannual reporting period,

(i) Number of valves for which leaks were detected as described in § 60.482(7)(b) or § 60.483-2,

(ii) Number of valves for which leaks were not reported as required in § 60.482-7(d)(1),

(iii) Number of pumps for which leaks were detected as described in §§ 60.482-2(b) and (d)(6)(i),

(iv) Number of pumps for which leaks erer not repaired as required in §§ 60.482-2(c)(1) and (d)(6)(ii),

(v) Number of compressors for which leaks were detected as desctibed in § 60.482-3(f),

(vi) Number of compressors for which leaks were not reported as required in § 60.482-3(g)(1), and

(vii) The facts that explain each delay of repair and, where appropriate, why a process unit shutdown was technically infeasible.

(3) Dates of process unit shutdowns which occurred within the semiannual reporting period.

(4) Revisions to items reported according to paragraph (b) if changes have occurred since the initial report or subsequent revisions to the initial report.

(d) An owner or opertor electing to comply with the provisions of §§ 60.483-1 and -2 shall notify the Administrator of the alternative standard selected 90 days before implementing either of the provisions.

(e) An owner or operator shall report the results of all performance tests in accordance with § 60.8 of the General Provisions. The provisions of § 60.8(d) do not apply to affected facilities subject to the provisions of this subpart except that an owner or operator must notify the Administrator of the schedule for the initial performance tests at least 30 days before the initial performance tests.

(f) The requirements of paragraphs (a) through (c) of this subsection remain in force until and unless EPA, in delegating enforcement authority to a State under Section 111(c) of the Act, approves reporting requirements or an alternative means of compliance surveillance adopted by such State. In that event, affected sources within the State will be relieved of the obligation to comply with the requirements of paragraphs (a) through (c) of this subsection, provided that they comply with the requirements established by the State.

(Sec. 114 of the Clean Air Act as amended (42 U.S.C. 7414))

Approved by the Office of Management and Budget under the control number 2060-0012)

§ 60.488 [Reserved]

§ 60.489 List of chemicals produced by affected facilities.

(a) The following chemicals are produced, as intermediates or final products, by process units covered under this subpart. The applicability date for process units producing one or more of these chemicals is January 5, 1981.

CAS No. [a]	Chemical
105-57-7	Acetal.
75-07-0	Acetaldehyde.
107-89-1	Acetaldol.
60-35-5	Acetamide.
103-84-4	Acetanilide.
64-19-7	Acetic acid.
108-24-7	Acetic anhydride.
67-64-1	Acetone.
75-86-5	Acetone cyanohydrin.
75-05-8	Acetonitrile.
98-86-2	Acetophenone.
75-36-5	Acetyl chloride.
74-86-2	Acetylene.
107-02-8	Acrolein.
79-06-1	Acrylamide.
79-10-7	Acrylic acid.
107-13-1	Acrylonitrile.
124-04-9	Adipic acid.
111-69-3	Adiponitrile.
([b])	Alkyl naphthalenes.
107-18-6	Allyl alcohol.
107-05-1	Allyl chloride.
1321-11-5	Aminobenzoic acid.
111-41-1	Aminoethylethanolamine.
123-30-8	p-Aminophenol.
628-63-7, 123-92-2.	Amyl acetates.
71-41-0 [c]	Amyl alcohols.
110-58-7	Amyl amine.
543-59-9	Amyl chloride.
110-66-7 [c]	Amyl mercaptans.
1322-06-1	Amyl phenol.
62-53-3	Aniline.
142-04-1	Aniline hydrochloride.
29191-52-4	Anisidine.
100-66-3	Anisole.
118-92-3	Anthranilic acid.
84-65-1	Anthraquinone.
100-52-7	Benzaldehyde.
55-21-0	Benzamide.
71-43-2	Benzene.
98-48-6	Benzenedisulfonic acid.
98-11-3	Benzenesulfonic acid.
134-81-6	Benzil.
76-93-7	Benzilic acid.
65-85-0	Benzoic acid.
119-53-9	Benzoin.
100-47-0	Benzonitrile.
119-61-9	Benzophenone.
98-07-7	Benzotrichloride.
98-88-4	Benzoyl chloride.
100-51-6	Benzyl alcohol.
100-46-9	Benzylamine.
120-51-4	Benzyl benzoate.
100-44-7	Benzyl chloride.
98-87-3	Benzyl dichloride.
92-52-4	Biphenyl.
80-05-7	Bisphenol A.
10-86-1	Bromobenzene.
27497-51-4	Bromonaphthalene.
106-99-0	Butadiene.
106-98-9	1-butene.
123-86-4	n-butyl acetate.
141-32-2	n-butyl acrylate.
71-36-3	n-butyl alcohol.
78-92-2	s-butyl alcohol.
75-65-0	t-butyl alcohol.
109-73-9	n-butylamine.
13952-84-6	s-butylamine.
75-64-9	t-butylamine.
98-73-7	p-tert-butyl benzoic acid.
107-88-0	1,3-butylene glycol.
123-72-8	n-butyraldehyde.
107-92-6	Butyric acid.
106-31-0	Butyric anhydride.
109-74-0	Butyronitrile.
105-60-2	Caprolactam.
75-1-50	Carbon disulfide.

CAS No. [a]	Chemical
558-13-4	Carbon tetrabromide.
56-23-5	Carbon tetrachloride.
9004-35-7	Cellulose acetate.
79-11-8	Chloroacetic acid.
108-42-9	m-chloroaniline.
95-51-2	o-chloroaniline.
106-47-8	p-chloroaniline.
35913-09-8	Chlorobenzaldehyde.
108-90-7	Chlorobenzene.
118-91-2, 535-80-8, 74-11-3 [c].	Chlorobenzoic acid.
2136-81-4, 2136-89-2, 5216-25-1 [c].	Chlorobenzotrichloride.
1321-03-5	Chlorbenzoyl chloride.
25497-29-4	Chlorodifluoromethane.
75-45-6	Chlorodifluoroethane.
67-66-3	Chloroform.
25586-43-0	Chloronapthalene.
88-73-3	o-chloronitrobenzene.
100-00-5	p-chloronitrobenzene.
25167-80-0	Chlorophenols.
126-99-8	Chloroprene.
7790-94-5	Chlorosulfonic acid.
108-41-8	m-chlorotoluene.
95-49-8	o-chlorotoluene.
106-43-4	p-chlorotoluene.
75-72-9	Chlorotrifluoromethane.
108-39-4	m-cresol.
95-48-7	o-cresol.
106-44-5	p-cresol.
1319-77-3	Mixed cresols.
1319-77-3	Cresylic acid.
4170-30-0	Crotonaldehyde.
3724-65-0	Crotonic acid.
98-82-8	Cumene.
80-15-9	Cumene hydroperoxide.
372-09-8	Cyanoacetic acid.
506-77-4	Cyanogen chloride.
108-80-5	Cyanuric acid.
108-77-0	Cyanuric chloride.
110-82-7	Cyclohexane.
108-93-0	Cyclohexanol.
108-94-1	Cyclohexanone.
110-83-8	Cyclohexene.
108-91-8	Cyclohexylamine.
111-78-4	Cyclooctadiene.
112-30-1	Decanol.
123-42-2	Diacetone alcohol.
27576-04-1	Diaminobenzoic acid.
95-76-1, 95-82-9, 554-00-7, 608-27-5, 608-31-1, 626-43-7, 27134-27-6, 57311-92-9 [c].	Dichloroaniline.
541-73-1	m-dichlorobenzene.
95-50-1	o-dichlorobenzene.
106-46-7	p-dichlorobenzene.
75-71-8	Dichlorodifluoromethane.
111-44-4	Dichloroethyl ether.
107-06-2	1,2-dichloroethane (EDC).
96-23-1	Dichlorohydrin.
26952-23-8	Dichloropropene.
101-83-7	Dicyclohexylamine.
109-89-7	Diethylamine.
111-46-6	Diethylene glycol.
112-36-7	Diethylene glycol diethyl ether.
111-96-6	Diethylene glycol dimethyl ether.
112-34-5	Diethylene glycol monobutyl ether.
124-17-7	Diethylene glycol monobutyl ether acetate.
111-90-0	Diethylene glycol monoethyl ether.
112-15-2	Diethylene glycol monoethyl ether acetate.
111-77-3	Diethylene glycol monomethyl ether.
64-67-5	Diethyl sulfate.
75-37-6	Difluoroethane.
25167-70-8	Diisobutylene.
26761-40-0	Diisodecyl phthalate.
27554-26-3	Diisooctyl phthalate.
674-82-8	Diketene.
124-40-3	Dimethylamine.
121-69-7	N,N-dimethylaniline.
115-10-6	N,N-dimethyl ether.
68-12-2	N,N-dimethylformamide.
57-14-7	Dimethylhydrazine.
77-78-1	Dimethyl sulfate.
75-18-3	Dimethyl sulfide.
67-68-5	Dimethyl sulfoxide.
120-61-6	Dimethyl terephthalate.
99-34-3	3,5-dinitrobenzoic acid.
51-28-5	Dinitrophenol.
25321-14-6	Dinitrotoluene.
123-91-1	Dioxane.
646-06-0	Dioxilane.
122-39-4	Diphenylamine.
101-84-8	Diphenyl oxide.
102-08-9	Diphenyl thiourea.
25265-71-8	Dipropylene glycol.
25378-22-7	Dodecene.
28675-17-4	Dodecylaniline.
27193-86-8	Dodecylphenol.
106-89-8	Epichlorohydrin.
64-17-5	Ethanol.
141-43-5 [c]	Ethanolamines.
141-78-6	Ethyl acetate.
141-97-9	Ethyl acetoacetate.
140-88-5	Ethyl acrylate.
75-04-7	Ethylamine.
100-41-4	Ethylbenzene.
74-96-4	Ethyl bromide.
9004-57-3	Ethylcellulose.
75-00-3	Ethyl chloride.
105-39-5	Ethyl chloroacetate.
105-56-6	Ethylcyanoacetate.
74-85-1	Ethylene.
96-49-1	Ethylne carbonate.
107-07-3	Ethylene chlorohydrin.
107-15-3	Ethylenediamine.
106-93-4	Ethylene dibromide.
107-21-1	Ethylene glycol.
111-55-7	Ethylene glycol diacetate.
110-71-4	Ethylene glycol dimethyl ether.
111-76-2	Ethylene glycol monobutyl ether.
112-07-2	Ethylene glycol monobutyl ether acetate.
110-80-5	Ethylene glycol monoethy ether.
111-15-9	Ethylene glycol monethyl ether acetate.
109-86-4	Ethylene glycol monomethyl ether.
110-49-6	Ethylene glycol monomethyl ether acetate.
122-99-6	Ethylene glycol monophenyl ether.
2807-30-9	Ethylene glycol monopropyl ether.
75-21-8	Ethylene oxide.
60-29-7	Ethyl ether
104-76-7	2-ethylhexanol.
122-51-0	Ethyl orthoformate.
95-92-1	Ethyl oxalate.
41892-71-1	Ethyl sodium oxalacetate.
50-00-0	Formaldehyde.
75-12-7	Formamide.
64-18-6	Formic acid.
110-17-8	Fumaric acid.
98-01-1	Furfural.
56-81-5	Glycerol.
26545-73-7	Glycerol dichlorohydrin.
25791-96-2	Glycerol triether.
56-40-6	Glycine.
107-22-2	Glyoxal.
118-74-1	Hexachlorobenzene.
67-72-1	Hexachloroethane.
36653-82-4	Hexadecyl alcohol.
124-09-4	Hexamethylenediamine.
629-11-8	Hexamethylene glycol.
100-97-0	Hexamethylenetetramine.
74-90-8	Hydrogen cyanide.
123-31-9	Hydroquinone.
99-96-7	p-hydroxybenzoic acid.
26760-64-5	Isoamylene.
78-83-1	Isobutanol.
110-19-0	Isobutyl acetate.
115-11-7	Isobutylene.
78-84-2	Isobutyraldehyde.
79-31-2	Isobutyric acid.
25339-17-7	Isodecanol.
26952-21-6	Isooctyl alcohol.
78-78-4	Isopentane.
78-59-1	Isophorone.
121-91-5	Isophthalic acid.
78-79-5	Isoprene.
67-63-0	Isopropanol.
108-21-4	Isopropyl acetate.
75-31-0	Isopropylamine.
75-29-6	Isopropyl chloride.
25168-06-3	Isopropylphenol.
463-51-4	Ketene.
([b])	Linear alkyl sulfonate.
123-01-3	Linear alkylbenzene (linear dodecylbenzene).
110-16-7	Maleic acid.
108-31-6	Maleic anhydride.
6915-15-7	Malic acid.
141-79-7	Mesityl oxide.
121-47-1	Metanilic acid.
79-41-4	Methacrylic acid.
563-47-3	Methallyl chloride.
67-56-1	Methanol.
79-20-9	Methyl acetate.
105-45-3	Methyl acetoacetate.
74-89-5	Methylamine.
100-61-8	n-methylaniline.
74-83-9	Methyl bromide.
37365-71-2	Methyl butynol.
74-87-3	Methyl chloride.
108-87-2	Methylcyclohexane.
1331-22-2	Methylcyclohexanone.
75-09-2	Methylene chloride.
101-77-9	Methylene dianiline.
101-68-8	Methylene diphenyl diisocyanate.
78-93-3	Methyl ethyl ketone.
107-31-3	Methyl formate.
108-11-2	Methyl isobutyl carbinol.
108-10-1	Methyl isobutyl ketone.
80-62-6	Methyl methacrylate.
77-75-8	Methylpentynol.
98-83-9	a-methylstyrene.
110-91-8	Morpholine.
85-47-2	a-naphthalene sulfonic acid.
120-18-3	b-naphthalene sulfonic acid.
90-15-3	a-naphthol.
135-19-3	b-naphthol.
75-98-9	Neopentanoic acid.
88-74-4	o-nitroaniline.
100-01-6	p-nitroaniline.
91-23-6	o-nitroanisole.
100-17-4	p-nitroanisole.
98-95-3	Nitrobenzene.
27178-83-2 [c]	Nitrobenzoic acid (o,m, and p).
79-24-3	Nitroethane.
75-52-5	Nitromethane.
88-75-5	2-Nitrophenol.
25322-01-4	Nitropropane.
1321-12-6	Nitrotoluene.
27215-95-8	Nonene.
25154-52-3	Nonylphenol.
27193-28-8	Octylphenol.
123-63-7	Paraldehyde.
115-77-5	Pentaerythritol.
109-66-0	n-pentane.
109-67-1	1-pentene
127-18-4	Perchloroethylene.
594-42-3	Perchloromethyl mercaptan.
94-70-2	o-phenetidine.
156-43-4	p-phenetidine.
108-95-2	Phenol.
98-67-9, 585-38-6, 609-46-1, 1333-39-7 [c].	Phenolsulfonic acids.
91-40-7	Phenyl anthranilic acid.
([b])	Phenylenediamine.
75-44-5	Phosgene.
85-44-9	Phthalic anhydride.
85-41-6	Phthalimide.
108-99-6	b-picoline.
110-85-0	Piperazine.
9003-29-6, 25036-29-7 [c].	Polybutenes.
25322-68-3	Polyethylene glycol.
25322-69-4	Polypropylene glycol.
123-38-6	Propional dehyde.
79-09-4	Propionic acid.
71-23-8	n-propyl alcohol.
107-10-8	Propylamine.
540-54-5	Propyl chloride.
115-07-1	Propylene.
127-00-4	Propylene chlorohydrin.
78-87-5	Propylene dichloride.
57-55-6	Propylene glycol.
75-56-9	Propylene oxide.
110-86-1	Pyridine.
106-51-4	Quinone.
108-46-3	Resorcinol.
27138-57-4	Resorcylic acid.
69-72-7	Salicylic acid.
127-09-3	Sodium acetate.
532-32-1	Sodium benzoate.
9004-32-4	Sodium carboxymethyl cellulose.
3926-62-3	Sodium chloroacetate.
141-53-7	Sodium formate.
139-02-6	Sodium phenate.
110-44-1	Sorbic acid.
100-42-5	Styrene.
110-15-6	Succinic acid.
110-61-2	Succinonitrile.
121-57-3	Sulfanilic acid.
126-33-0	Sulfolane.
1401-55-4	Tannic acid.
100-21-0	Terephthalic acid.
79-34-5 [c]	Tetrachloroethanes.
117-08-8	Tetrachlorophthalic anhydride.

CAS No. [a]	Chemical
78-00-2	Tetraethyl lead.
119-64-2	Tetrahydronapthalene.
85-43-8	Tetrahydrophthalic anhydride.
75-74-1	Tetramethyl lead.
110-60-1	Tetramethylenediamine.
110-18-9	Tetramethylethylenediamine.
108-88-3	Toluene.
95-80-7	Toluene-2,4-diamine.
584-84-9	Toluene-2,4-diisocyanate.
26471-62-5	Toluene diisocyanates (mixture).
1333-07-9	Toluenesulfonamide.
104-15-4 [c]	Toluenesulfonic acids.
98-59-9	Toluenesulfonyl chloride.
26915-12-8	Toluidines.
87-61-6, 108-70-3, 120-82-1 [c]	Trichlorobenzenes.
71-55-6	1,1,1-trichloroethane.
79-00-5	1,1,2-trichloroethane.
79-01-6	Trichloroethylene.
75-69-4	Trichlorofluoromethane.
96-18-4	1,2,3-trichloropropane.
76-13-1	1,1,2-trichloro-1,2,2-trifluoroethane.
121-44-8	Triethylamine.
112-27-6	Triethylene glycol.
112-49-2	Triethylene glycol dimethyl ether.
7756-94-7	Triisobutylene.
75-50-3	Trimethylamine.
57-13-6	Urea.
108-05-4	Vinyl acetate.
75-01-4	Vinyl chloride.
75-35-4	Vinylidene chloride.
25013-15-4	Vinyl toluene.
1330-20-7	Xylenes (mixed).
95-47-6	o-xylene.
106-42-3	p-xylene.
1300-71-6	Xylenol.
1300-73-8	Xylidine.

[a] CAS numbers refer to the Chemical Abstracts Registry numbers assigned to specific chemicals, isomers, or mixtures of chemicals. Some isomers or mixtures that are covered by the standards do not have CAS numbers assigned to them. The standards apply to all of the chemicals listed, whether CAS numbers have been assigned or not.

[b] No CAS number(s) have been assigned to this chemical, its isomers, or mixtures containing these chemicals.

[c] CAS numbers for some of the isomers are listed; the standards apply to all of the isomers and mixtures, even if CAS numbers have not been assigned.

5. In Appendix A of Part 60, Method 18 is added as follows:

Method 18—Measurement of Gaseous Organic Compound Emissions by Gas Chromatography

Introduction

[This method should not be attempted by persons unfamiliar with the performance characteristics of gas chromatography, nor by those persons who are unfamiliar with source sampling. Particular care should be exercised in the area of safety concerning choice of equipment and operation in potentially explosive atmospheres.]

1. *Applicability and Principle*

1.1 Applicability. This method applies to the analysis of approximately 90 percent of the total gaseous organics emitted from an industrial source. It does not include techniques to identify and measure trace amounts of organic compounds, such as those found in building air and fugitive emission sources.

This method will not determine compounds that (1) are polymeric (high molecular weight), (2) can polymerize before analysis, or (3) have very low vapor pressures at stack or instrument conditions.

1.2 Principle. This method is based on separating the major components of a gas mixture with a gas chromatograph (GC) and measuring the separated components with a suitable detector.

The retention times of each separated component are compared with those of known compounds under identical conditions. Therefore, the analyst confirms the identity and approximate concentrations of the organic emission components beforehand. With this information, the analyst then prepares or purchases commercially available standard mixtures to calibrate the GC under conditions identical to those of the samples. The analyst also determines the need for sample dilution to avoid detector saturation, gas stream filtration to eliminate particulate matter, and prevention of moisture condensation.

2. *Range and Sensitivity*

2.1 Range. The range of this method is from about 1 part per million (ppm) to the upper limit governed by GC detector saturation or column overloading. The upper limit can be extended by diluting the stack gases with an inert gas or by using smaller gas sampling loops.

2.2 Sensitivity. The sensitivity limit for a compound is defined as the minimum detectable concentration of that compound, or the concentration that produces a signal-to-noise ratio of three to one. The minimum detectable concentration is determined during the presurvey calibration for each compound.

3. *Precision and Accuracy*

Gas chromatographic techniques typically provide a precision of 5 to 10 percent relative standard deviation (RSD), but an experienced GC operator with a reliable instrument can readily achieve 5 percent RSD. For this method, the following combined GC/operator values are required.

(a) Precision. Duplicate analyses are within 5 percent of their mean value.

(b) Accuracy. Analysis results of prepared audit samples are within 10 percent of preparation values.

4. *Interferences*

Resolution interferences that may occur can be eliminated by appropriate GC column and detector choice or by shifting the retention times through changes in the column flow rate and the use of temperature programming.

The analytical system is demonstrated to be essentially free from contaminants by periodically analyzing blanks that consist of hydrocarbon-free air or nitrogen.

Sample cross-contamination that occurs when high-level and low-level samples or standards are analyzed alternately, is best dealt with by thorough purging of the GC sample loop between samples.

To assure consistent detector response, calibration gases are contained in dry air. To eliminate errors in concentration calculations due to the volume of water vapor in the samples, moisture concentrations are determined for each sample, and a correction factor is applied to any sample with greater than 2 percent water vapor.

5. *Presurvey and Presurvey Sampling*

A presurvey shall be performed on each source to be tested. The purpose of the presurvey is to obtain all information necessary to design the emission test. The most important presurvey data are the average stack temperature and temperature range, approximate particulate concentration, static pressure, water vapor content, and identity and expected concentration of each organic compound to be analyzed. Some of this information can be obtained from literature surveys, direct knowledge, or plant personnel. However, presurvey samples of the gas shall be obtained for analysis to confirm the identity and approximate concentrations of the specific compounds prior to the final testing.

5.2 Apparatus.

5.1.1 Teflon Tubing. (Mention of trade names or specific products does not constitute endorsement by the U.S. Environmental Protection Agency.) Diameter and length determined by connection requirements of cylinder regulators and the GC. Additional tubing is necessary to connect the GC sample loop to the sample.

5.1.2 Gas Chromatograph. GC with suitable detector, columns, temperature-controlled sample loop and valve assembly, and temperature programable oven, if necessary. The GC shall achieve sensitivity requirements for the compounds under study.

5.1.3 Pump. Capable of pumping 100 ml/min. For flushing sample loop.

5.1.4 Flow Meter. To accurately monitor sample loop flow rate of 100 ml/min.

5.1.5 Regulators. Used on gas cylinders for GC and for cylinder standards.

5.1.6 Recorder. Recorder with linear strip chart is minimum acceptable. Integrator (optional) is recommended.

5.1.7 Syringes. 1.0- and 10-microliter size, calibrated, maximum accuracy (gas tight) for preparing standards and for injecting head space vapor from liquid standards in retention time studies.

5.1.8 Tubing Fittings. To plumb GC and gas cylinders.

5.1.9 Septums. For syringe injections.

5.1.10 Glass Jars. If necessary, clean-colored glass jars with Teflon-lined lids for condensate sample collection. Size depends on volume of condensate.

5.1.11 Soap Film Flow Meter. To determine flow rates.

5.1.12 Tedlar Bags. 10- and 50-liter capacity, for preparation of standards.

5.1.13 Dry Gas Meter with Temperature and Pressure Gauges. Accurate to ±2 percent, for perparation of gas standards.

5.1.14 Midget Impinger/Hot Plate Assembly. For preparation of gas standards.

5.1.15 Sample Flasks. For presurvey samples, must have gas-tight seals.

5.1.16 Adsorption Tubes. If necessary, blank tubes filled with necessary adsorbent (charcoal, Tenax, XAD-2, etc.) for presurvey samples.

5.1.17 Personnel Sampling Pump. Calibrated, for collecting adsorbent tube presurvey samples.

5.1.18 Dilution System. Calibrated, the dilution system is to be constructed following the specifications of an acceptable method.

5.2 Reagents.

5.2.1 Deionized Distilled Water.

5.2.2 Methylene Dichloride.

5.2.3 Calibration Gases. A series of standards prepared for every compound of interest.

5.2.4 Calibration Solutions. Samples of all the compounds of interest in a liquid form, for retention time studies.

5.2.5 Extraction Solvents. For extraction of adsorbent tube samples in preparation for analysis.

5.2.6 Fuel. As recommended by the manufacturer for operation of the GC.

5.2.7 Carrier Gas. Hydrocarbon free, as recommended by the manufacturer for operation of the detector and compatability with the column.

5.2.8 Zero Gas. Hydrocarbon free air or nitrogen, to be used for dilutions, blank preparation, and standard preparation.

5.3 Sampling.

5.3.1 Collection of Samples with Glass Sampling Flasks. Presurvey samples can be collected in precleaned 250-ml double-ended glass sampling flasks. Teflon stopcocks, without grease, are preferred. Flasks should be cleaned as follows: Remove the stopcocks from both ends of the flasks, and wipe the parts to remove any grease. Clean the stopcocks, barrels, and receivers with methylene dichloride. Clean all glass ports with a soap solution, then rinse with tap and deionized distilled water. Place the flask in a cool glass annealing furnace and apply heat up to 500° C. Maintain at this temperature for 1 hour. After this time period, shut off and open the furnace to allow the flask to cool. Grease the stopcocks with stopcock grease and return them to the flask receivers. Purge the assembly with high-purity nitrogen for 2 to 5 minutes. Close off the stopcocks after purging to maintain a slight positive nitrogen pressure. Secure the stopcocks with tape.

Presurvey samples can be obtained either by drawing the gases into the previously evacuated flask or by drawing the gases into and purging the flask with a rubber suction bulb.

5.3.1.1 Evacuated Flask Procedure. Use a high-vacuum pump to evacuate the flask to the capacity of the pump; then close off the stopcock leading to the pump. Attach a 6-mm outside diameter (OD) glass tee to the flask inlet with a short piece of Teflon tubing. Select a 6-mm OD borosilicate sampling probe, enlarged at one end to a 12-mm OD and of sufficient length to reach the centroid of the duct to be sampled. Insert a glass wool plug in the enlarged end of the probe to remove particulate matter. Attach the other end of the probe to the tee with a short piece of Teflon tubing. Connect a rubber suction bulb to the third leg of the tee. Place the filter end of the probe at the centroid of the duct, and purge the probe with the rubber suction bulb. After the probe is completely purged and filled with duct gases, open the stopcock to the grab flask until the pressure in the flask reaches duct pressure. Close off the stopcock, and remove the probe from the duct. Remove the tee from the flask and tape the stopcocks to prevent leaks during shipment. Measure and record the duct temperature and pressure.

5.3.1.2 Purged Flask Procedure. Attach one end of the sampling flask to a rubber suction bulb. Attach the other end to a 6-mm OD glass probe as described in Section 5.3.1.1. Place the filter end of the probe at the centroid of the duct, and apply suction with the bulb to completely purge the probe and flask. After the flask has been purged, close off the stopcock near the suction bulb, and then close the stopcock near the probe. Remove the probe from the duct, and disconnect both the probe and suction bulb. Tape the stopcocks to prevent leakage during shipment. Measure and record the duct temperature and pressure.

5.3.2 Flexible Bag Procedure. Tedlar or aluminized Mylar bags can also be used to obtain the presurvey sample. Use new bags, and leak check them before field use. In addition, check the bag before use for contamination by filling it with nitrogen or air, and analyzing the gas by GC at high sensitivity. Experience indicates that it is desirable to allow the inert gas to remain in the bag about 24 hours or longer to check for desorption of organics from the bag. Follow the leak check and sample collection procedures given in Section 7.1.

5.3.3 Determination of Moisture Content. For combustion or water-controlled processes, obtain the moisture content from plant personnel or by measurement during the presurvey. If the source is below 59° C, measure the wet bulb and dry bulb temperatures, and calculate the moisture content using a psychrometric chart. At higher temperatures, use Method 4 to determine the moisture content.

5.4 Determination of Static Pressure. Obtain the static pressure from the plant personnel or measurement. If a type S pitot tube and an inclined manometer are used, take care to align the pitot tube 90° from the direction of the flow. Disconnect one of the tubes to the manometer, and read the static pressure; note whether the reading is positive or negative.

5.5 Collection of Presurvey Samples with Adsorption Tube. Follo Section 7.4 for presurvey sampling.

6. *Analysis Development*

Presurvey samples shall be used to develop and confirm the best sampling and analysis scheme.

6.1 Selection of GC Parameters.

6.1.1 Column Choice. Based on the initial contact with plant personnel concerning the plant process and the anticipated emissions, choose a column that provides good resolution and rapid analysis time. The choice of an appropriate column can be aided by a literature search, contact with manufacturers of GC columns, and discussion with personnel at the emission source.

Most column manufacturers keep excellent records of their products. Their technical service departments may be able to recommend appropriate columns and detector type for separating the anticipated compounds, and they may be able to provide information on interferences, optimum operating conditions, and column limitations.

Plants with analytical laboratories may be able to provide information on their analytical procedures, including extractions, detector type, column types, compounds emitted, and approximate concentrations.

6.1.2 Preliminary GC Adjustment. Using the standards and column obtained in Section 6.1.1, perform initial tests to determine appropriate GC conditions that provide good resolution and minimum analysis time for the compounds of interest.

6.1.3 Preparation of Presurvey Samples. If the samples were collected on an adsorbent, extract the sample as recommended by the manufacturer for removal of the compounds with a solvent suitable to the type of GC analysis. Prepare other samples in an appropriate manner.

6.1.4 Presurvey Sample Analysis. Before analysis, heat the presurvey sample to the duct temperature to vaporize any condensed material. Analyze the samples by the GC procedure, and compare the retention times against those of the calibration samples that contain the components expected to be in the stream. If any compounds cannot be identified with certainty by this procedure, identify them by other means such as GC/mass spectroscopy (GC/MS) or GC/infrared techniques. A GC/MS system is recommended.

Use the GC conditions determined by the procedures of Section 6.1.2 for the first injection. Vary the GC parameters during subsequent injections to determine the optimum settings. Once the optimum settings have been determined, perform repeat injections of the sample to determine the retention time of each compound. To inject a sample, draw sample through the loop at a constant rate (100 ml/min for 30 seconds). Be careful not to pressurize the gas in the loop. Turn off the pump and allow the gas in the sample loop to come to ambient pressure. Activate the sample valve, and record injection time, loop temperature, column temperature, carrier flow rate, chart speed, and attenuator setting. Calculate the retention time of each peak using the distance from injection to the peak maximum divided by the chart speed. Retention times should be repeatable within 0.5 seconds.

If the concentrations are too high for appropriate detector response, a smaller sample loop or dilutions may be used for gas samples, and, for liquid samples, dilution with solvent is appropriate. Use the standard curves (Section 6.3) to obtain an estimate of the concentrations.

Identify all peaks by comparing the known retention times of compounds expected to be in the retention times of peaks in the sample. Identify any remaining unidentified peaks which have areas larger than 5 percent of the total using a GC/MS, or estimation of possible compounds by their retention times compared to known compounds, with confirmation by further GC analysis.

6.2 Calibration Standards. If the presurvey samples are collected in an adsorbent tube (charcoal, XAD-2, Tenax, etc.), prepare the standards in the same solvent used for the extraction procedure for the adsorbent. Prepare several standards for each compound throughout the range of the sample.

6.2.1 Cylinder Calibration Gases. If available, use NBS reference gases or commercial gas mixtures certified through direct analysis for the calibration curves.

6.2.1.1 Optional Cylinder Approach. As an alternative procedure, maintain high and low calibration standards. Use the high concentration (50 to 100 ppm) standard to prepare a three-point calibration curve with an appropriate dilution technique. Use this

same approach also to verify the dilution techniques for high-concentration source gases.

To prepare the diluted calibration samples, use calibrated rotameters to meter both the high concentration calibration gas and the diluent gas. Adjust the flow rates through the rotameters with micrometer valves to obtain the desired dilutions. A positive displacement pump or other metering techniques may be used in place of the rotameter to provide a fixed flow of high concentration gas.

To calibrate the rotameters, connect each rotameter between the diluent gas supply and a suitably sized bubble meter, spirometer, or wet test meter. While it is desirable to calibrate the calibration gas flowmeter with calibration gas, generally the available amount of this gas will preclude it. The error introduced by using the diluent gas is insignificant for gas mixtures of up to 1,000 to 2,000 ppm of each organic component. Record the temperature and atmospheric pressures as follows:

$$Q_2 = Q_1\left(\frac{P_2T_1}{P_1\ T_2}\right)1/2 \quad \text{Eq. 18-1}$$

Where:

Q_2 = Flow rate at new absolute temperature (T_2) and new absolute pressure (P_2).

Q_1 = Flow rate at calibration absolute temperature (T_1) and absolute pressure (P_1).

Connect the rotameters to the calibration and diluent gas supplies using 6-mm Teflon tubing. Connect the outlet side of the rotameters through a connector to a leak-free Tedlar bag as shown in Figure 18.5. (See Section 7.1 for leak check procedures.) Adjust the gas flows to provide the desired dilution, and fill the bag with sufficient gas for calibration. Be careful not to fill to the point where it applies additional pressure on the gas. Record the flow rates of both rotameters, the ambient temperature, and atmospheric pressure. Calculate the concentration of diluted gas as follows:

$$C_a = \frac{10^6(\bar{X}_a\ q_a)}{q_a + q_d} \quad \text{Eq. 18-2}$$

Where:

C_a = Concentration of component "a" in ppm.

$\bar{X}_a$ = Mole fraction of component "a" in the calibration gas to be diluted.

q_a = Flow rate of the calibration gas contains mg component "a" at measured temperature and pressure.

q_d = Diluent gas flow at measured temperature and pressure.

Use single-stage dilutions to prepare calibration mixtures up to about 1:20 dilution factor. For greater dilutions, use a double dilution system. Assemble the apparatus, as shown in Figure 18-6, using calibrated flowmeters of suitable range. Adjust the control valves so that about 90 percent of the diluted gas from the first stage is exhausted, and 10 percent goes to the second stage flowmeter. Fill the Tedlar bag with the dilute gas from the second stage. Record the temperature, ambient pressure, and water manometer pressure readings. Correct the flow reading in the first stage as indicated by the water manometer reading. Calculate the concentration of the component in the final gas mixture as follows:

$$C_a = 10^6\ \bar{X}_a\left(\frac{q_a1}{q_a1+q_d1}\right)\left(\frac{q_a2}{q_a2+q_d2}\right) \quad \text{Eq. 18-3}$$

Where:

C_a = Concentration of component "a" in ppm.

$\bar{X}_a$ = Mole fraction of component "a" in original gas.

q_a1 = Flow rate of component "a" in stage 1.

q_a2 = Flow rate of component "a" in stage 2.

q_d1 = Flow rate of diluent gas in stage 1.

q_d2 = Flow rate of diluent gas in stage 2.

Further details of the calibration methods for rotameters and the dilution system can be found in Citation 21 in Section 8.

6.2.2 Preparation of Standards from Volatile Materials. Record all data shown on Figure 18-3.

6.2.2.1 Bag Technique. Evacuate a 10-liter Tedlar bag that has passed a leak check (see Section 7.1), and meter in 5.0 liters of nitrogen through a 0.5 liter per revolution dry test meter. While the bag is filling, use a 0.5-ml syringe to inject a known quantity of the material of interest through the wall of the bag or through a septum—caped tee at the bag inlet. Withdraw the syringe needle, and immediately cover the resulting hole with a piece of masking tape. In a like manner, prepare dilutions having other concentrations. Prepare a minimum of three concentrations. Place each bag on a smooth surface, and alternately depress opposite sides of the bag 50 times to mix the gases. Record the average meter temperature, gas volume, liquid volume, barometric pressure, and meter pressure.

Set the electrometer attenuator to the X1 Position. Flush the sampling loop with zero helium or nitrogen, and activate the sample valve. Record the injection time, sample loop temperature, column temperature, carrier gas flow rate, chart speed, and attenuator setting. Record peaks and detector responses that occur in the absence of any sample. Maintain conditions. Flush the sample loop for 30 seconds at the rate of 100 ml/min with one of the calibration mixtures, and open the sample valve. Record the injection time. Select the peak that corresponds to the compound of interest. Measure the distance on the chart from the injection time to the time at which the peak maximum occurs. Divide this quantity by the chart speed, and record the resulting value as the retention time.

6.2.2.2 Preparation of Standards from less Volatile Liquid Materials. Use the equipment shown in Figure 18-8. Calibrate the dry gas meter with a wet test meter or a spirometer. Use a water manometer for the pressure gauge and glass, Teflon, brass, or stainless steel for all connections. Connect a valve to the inlet of the 50-liter Tedlar bag.

To prepare the standards, assemble the equipment as shown in Figure 18-8, and leak check the system. Completely evacuate the bag. Fill the bag with hydrocarbon-free air, and evacuate the bag again. Close the inlet valve.

Turn on the hot plate, and allow the water to reach boiling. Connect the bag to the impinger outlet. Record the initial meter reading, open the bag inlet valve, and open the cylinder. Adjust the rate so that the bag will be completely filled in approximately 15 minutes. Record meter pressure, temperature, and local barometric pressure.

Fill the syringe to the desired liquid volume with the material to be evaluated. Place the syringe needle into the impinger inlet using the septum provided, and inject the liquid into the flowing air stream. Use a needle of sufficient length to permit injection of the liquid below the air inlet branch of the tee. Remove the syringe.

Complete filling of the bag; note and record the meter pressure and temperature at regular intervals, preferably 1 minute.

When the bag is filled, stop the pump, and close the bag inlet valve. Record the final meter reading.

Disconnect the bag from the impinger outlet, and set it aside for at least 1 hour to equilibrate. Analyze the sample within the proven life period of its preparation.

6.2.2.3 Concentration Calculations. Average the meter temperature (T_m) and pressure (P_m) readings over the bag filling process.

Measure the solvent liquid density at room temperature by accurately weighing a known volume of the material on an analytical balance to the nearest 1.0 milligram. Take care during the weighing to minimize evaporation of the material. A ground-glass stoppered 25-ml volumetric flask or a glass-stoppered specific gravity bottle is suitable for weighing. Calculate the result in terms of g/ml. As an alternative, literature values of the density of the liquid at 20°C may be used.

Calculate the concentration of material in the sample in mg/liter at standard conditions as follows:

$$C_{std\ sol} = \frac{760(L_v)(p)(273+T_m)}{273(M_f-M_i)(P_{bar}+P_m)} \quad \text{Eq. 18-4}$$

Where:

$C_{std\ sol}$ = Standard solvent concentration, mg/std liter.

L_v = Liquid volume injected, ml.

p = Liquid density at room temperature, g/ml.

T_m = Meter temperature, °C.

M_f, M_i = Final and initial meter reading, liters.

P_{bar} = Local barometric pressure (absolute), mm Hg.

P_m = Meter pressure (gauge), mm Hg.

6.3 Preparation of Calibration Curves. Obtain gas standards as described in Section 6.2 such that three concentrations per attentuator range are available. Establish proper GC conditioning, then flush the sampling loop for 30 seconds at a rate of 100 ml/min. Allow the sample loop pressure to equilibrate with atmospheric pressure, and activate the injection valve. Record the standard concentration, attentuator setting, injection time, chart speed, retention time,

peak area, sample loop, temperature, column temperature, and carrier gas flow rate. Repeat the standard injection until two consecutive injections give area counts within 5 percent of their average. The average multiplied by the attenuator setting is then the calibration area value for that concentration.

Repeat this procedure for each standard. Plot concentrations along the abscissa and the calibration area values along the ordinate. Perform a regression analysis, and draw the least squares line.

6.4 Optional Use of Prepared Cylinders for Dilution Calibration Checks, and Response Factor Determinations. A set of three standards of the major component in the emissions is required. This set of standards can be taken into the field and thereby replace the need to prepare standards as described in Section 6.2.2.

The high concentration standard can be run through the dilution system to assess the accuracy of the system. First, prepare a calibration curve using the three standards following the procedure described in Section 6.3. Then, prepare a dilute sample using the high concentration standard so that the dilute sample will fall within the lower limits of the calibration curve.

Next, analyze the dilute sample, and calculate the measured concentration from the calibration curve as described in Section 6.3. The dilute concentration calculated from the analysis shall be within 10 percent of the concentration expected from the dilution system; otherwise determine the source of error in the dilution system, and correct it.

The calibration curve from the cylinder standards for a single organic can also be related to the GC response curves of all the compounds in the source by response factors developed in the laboratory. In the field, the single calibration curve from the cylinder standards and the calculated response factors measured in the laboratory can then be used to replace the need to prepare and analyze calibration standards for each organic compound (see Section 6.5 on daily quality control procedure).

Recheck the relative peak area of one of the calibration standards daily to guard against degradation. If the relative peak areas on successive days differ by more than 5 percent, remake all of the standards before proceeding to the final sample analyses.

6.5 Evaluation of Calibration and Analysis Procedure. Immediately after the preparation of the calibration curve and prior to the final sample analyses, perform the analysis audit described in Part 61, Appendix C, Procedure 2: "Procedure for Field Auditing GC Analysis" (47 FR 39179, September 7, 1982). The information required to document the analysis of the audit samples has been included on the example data sheets shown in Figures 18–3 and 18–7. The audit analyses shall agree with the audit concentrations within 10 percent. When available, the tester may obtain audit cylinders by contacting: Environmental Protection Agency, Environmental Monitoring Systems Laboratory, Quality Assurance Division (MD–77), Research Triangle Park, North Carolina 27711. Audit cylinders obtained from a commercial gas manufacturer may be used provided: (a) the gas manufacturer certifies the audit cylinder as described in Section 5.2.3.1 of Method 23 and (b) the gas manufacturer obtains an independent analysis of the audit cylinders to verify this analysis. Independent analysis is defined as an analysis performed by an individual other than the individual who performs the gas manufacturer's analysis, while using calibration standards and analysis equipment different from those used for the gas manufacturer's analysis. Verification is complete and acceptable when the independent analysis concentration is within 5 percent of the gas manufacturer's concentration.

7. Final Sampling and Analysis Procedure

Considering safety (flame hazards) and the source conditions, select an appropriate sampling and analysis procedure (Section 7.1, 7.2, 7.3, or 7.4). In situations where a hydrogen flame is a hazard and no intrinsically safe GC is suitable, use the flexible bag collection technique or an adsorption technique. If the source temperature is below 100°C, and the organic concentrations are suitable for the detector to be used, use the direct interface method. If the source gases require dilution, use a dilution interface and either the bag sample or adsorption tubes. The choice between these two techniques will depend on the physical layout of the site, the source temperature, and the storage stability of the compounds if collected in the bag. Sample polar compounds by direct interfacing or dilution interfacing to prevent sample loss by adsorption on the bag.

7.1 Integrated Bag Sampling and Analysis

7.1.1 Evacuated Container Sampling Procedure. In this procedure, the bags are filled by evacuating the rigid air-tight container holding the bags. Therefore, check both the bags and the container for leaks before and after use as follows: Connect a water manometer using a tee connector between the bag or rigid container and a pressure source. Pressurize the bag or container to 5 to 10 cm H_2O (2 to 4 in. H_2O), and allow it to stand overnight. A deflated bag indicates a leak.

7.1.1.1 Apparatus.

7.1.1.1.1 Probe. Stainless steel, Pyrex glass, or Teflon tubing probe, according to the duct temperature, with 6.4-mm OD Teflon tubing of sufficient length to connect to the sample bag. Use stainless steel or Teflon unions to connect probe and sample line.

7.1.1.1.2 Quick Connects. Male (2) and female (2) of stainless steel construction.

7.1.1.1.3 Needle Valve. To control gas flow.

7.1.1.1.4 Pump. Leakless Teflon-coated diaphragm-type pump or equivalent. To deliver at least 1 liter/min.

7.1.1.1.5 Charcoal Adsorption Tube. Tube filled with activated charcoal, with glass wool plugs at each end, to adsorb organic vapors.

7.1.1.1.6 Flowmeter. 0 to 500-ml flow range; with manufacturer's calibration curve.

7.1.1.2 Sampling Procedure. To obtain a sample, assemble the sample train as shown in Figure 18–9. Leak check both the bag and the container. Connect the vacuum line from the needle valve to the Teflon sample line from the probe. Place the end of the probe at the centroid of the stack, and start the pump with the needle valve adjusted to yield a flow of 0.5 liter/minute. After allowing sufficient time to purge the line several times, connect the vacuum line to the bag, and evacuate until the rotameter indicates no flow. Then position the sample and vacuum lines for sampling, and begin the actual sampling, keeping the rate proportional to the stack velocity. As a precaution, direct the gas exiting the rotameter away from sampling personnel. At the end of the sample period, shut off the pump, disconnect the sample line from the bag, and disconnect the vacuum line from the bag container, Record the source temperature, barometric pressure, ambient temperature, sampling flow rate, and initial and final sampling time on the data sheet shown in Figure 18–10. Protect the Tedlar bag and its container from sunlight. When possible, perform the analysis within 2 hours of sample collection.

7.1.2 Direct Pump Sampling Procedure. Flow 7.1.1, except place the pump and needle valve between the probe and the bag. Use a pump and needle valve constructed of stainless steel or some other material not affected by the stack gas. Leak check the system, and then purge with stack gas before the connecting to the previously evacuated bag.

7.1.3 Explosion Risk Area Bag Sampling Procedure. Follow 7.1.1 except replace the pump with another evacuated can (see Figure 18–9a). Use this method whenever there is a possibility of an explosion due to pumps, heated probes, or other flame producing equipment.

7.1.4 Other Modified Bag Sampling Procedures. In the event that condensation is observed in the bag while collecting the sample and a direct interface system cannot be used, heat the bag during collection, and maintain it at a suitably elevated temperature during all subsequent operations. (Note: Take care to leak check the system prior to the dilutions so as not to create a potentially explosive atmosphere.) As an alternative, collect the sample gas, and simultaneously dilute it in the Tedlar bag.

In the first procedure, heat the box containing the sample bag to the source temperature, provided the components of the bag and the surrounding box can withstand this temperature. Then transport the bag as rapidly as possible to the analytical area while maintaining the heating, or cover the box with an insulating blanket. In the analytical area, keep the box heated to source temperature until analysis. Be sure that the method of heating the box and the control for the heating circuit are compatible with the safety restrictions required in each area.

To use the second procedure, prefill the Tedlar bag with a known quantity of inert gas. Meter the inert gas into the bag according to the procedure for the preparation of gas concentration standards of volatile liquid materials (Section 6.2.2.2), but eliminate the midget impinger section. Take the partly filled bag to the source, and meter the source gas into the bag through heated sampling lines and a heated flowmeter, or

Teflon positive displacement pump. Verify the dilution factors periodically through dilution and analysis of gases of known concentration.

7.1.5 Analysis of Bag Samples. Connect the needle valve, pump, charcoal tube, and flowmeter to draw gas samples through the gas sampling valve. Flush the sample loop with gas from one of the three Tedlar bags containing a calibration mixture, and analyze the sample. Obtain at least two chromatograms for the sample. The results are acceptable when the peak areas from two consecutive injections agree to within 5 percent of their average. If they do not agree, run additional samples until consistent area data are obtained. If this agreement is not obtained, correct the instrument technique problems before proceeding. If the results are acceptable, analyze the other two calibration gas mixtures in the same manner. Prepare the calibration curve by using the least squares method.

Analyze the two field audit samples as described in Section 6.5 by connecting each Tedlar bag containing an audit gas mixture to the sampling valve. Calculate the results; record and report the data to the audit supervisor. If the results are acceptable, proceed with the analysis of the source samples.

Analyze the source gas samples by connecting each bag to the sampling valve with a piece of Teflon tubing identified with that bag. Follow the restrictions on replicate samples specified for the calibration gases. Record the data. Analyze the other two bag samples of source gas in the same manner. After all three bag samples have been analyzed, repeat the analysis of the calibration gas mixtures. Use the average of the two calibration curves to determine the respective sample concentrations. If the two calibration curves differ by more than 5 percent from their mean value, then report the final results by both calibration curves.

7.1.6 Determination of Bag Water Vapor Content. Measure the ambient temperature and barometric pressure near the bag. From a water saturation vapor pressure table, determine and record the water vapor content of the bag as a decimal figure. (Assume the relative humidity to be 100 percent unless a lesser value is known.)

Use the field analytical data sheet as shown in Figure 18–11. The sheet has been designed to tabulate information from the bag collection, direct interface, and dilution interface systems; as a result, not all of the requested information will apply to any single method. Note the data that do not apply with the notation "N.A." Summarize the analysis.

7.2 Direct Interface Sampling and Analysis Procedure. The direct interface procedure can be used provided that the moisture content of the gas does not interfere with the analysis procedure, the physical requirements of the equipment can be met at the site, and the source gas concentration is low enough that detector saturation is not a problem. Adhere to all safety requirements with this method.

7.2.1 Apparatus.

7.2.1.1 Probe. Constructed of stainless steel, Pyrex glass, or Teflon tubing as required by duct temperature, 6.4-mm OD, enlarged at duct end to contain glass wool plug. If necessary, heat the probe with heating tape or a special heating unit capable of maintaining duct temperature.

7.2.1.2 Sample Lines. 6.4-mm OD Teflon lines, heat-traced to prevent condensation of material.

7.2.1.3 Quick Connects. To connect sample line to gas sampling valve on GC instrument and to pump unit used to withdraw source gas. Use a quick connect or equivalent on the cylinder or bag containing calibration gas to allow connection of the calibration gas to the gas sampling valve.

7.2.1.4 Thermocouple Readout Device. Potentiometer or digital thermometer, to measure source temperature and probe temperature.

7.2.1.5 Heated Gas Sampling Valve. Of two-position, six-port design, to allow sample loop to be purged with source gas or to direct source gas into the GC instrument.

7.2.1.6 Needle Valve. To control gas sampling rate from the source.

7.2.1.7 Pump. Leakless Teflon-coated diaphragm-type pump or equivalent, capable of at least 1 liter/minute sampling rate.

7.2.1.8 Flowmeter. Of suitable range to measure sampling rate.

7.2.1.9 Charcoal Adsorber. To adsorb organic vapor collected from the source to prevent exposure of personnel to source gas.

7.2.1.10 Gas Cylinders. Carrier gas (helium or nitrogen), and oxygen and hydrogen for a flame ionization detector (FID) if one is used.

7.2.1.11 Gas Chromatograph. Capable of being moved into the field, with detector, heated gas sampling valve, column required to complete separation of desired components, and option for temperature programming.

7.2.1.12 Recorder/Integrator. To record results.

7.2.2 Procedure. To obtain a sample, assemble the sampling system as shown in Figure 18–12. Make sure all connections are tight. Turn on the probe and sample line heaters. As the temperature of the probe and heated line approaches the source temperature as indicated on the thermocouple readout device, control the heating to maintain a temperature of 0 to 3°C above the source temperature. While the probe and heated line are being heated, disconnect the sample line from the gas sampling valve, and attach the line from the calibration gas mixture. Flush the sample loop with calibration gas and analyze a portion of that gas. Record the results. After the calibration gas sample has been flushed into the GC instrument, turn the gas sampling valve to flush position, then reconnect the probe sample line to the valve. Move the probe to the sampling position, and draw source gas into the probe, heated line, and sample loop. After thorough flushing, analyze the sample using the same conditions as for the calibration gas mixture. Repeat the analysis on an additional sample. Measure the peak areas for the two samples, and if they do not agree to within 5 percent of their mean value, analyze additional samples until two consecutive analyses meet this criteria. Record the data. After consistent results are obtained, remove the probe from the source and analyze a second calibration gas mixture. Record this calibration data and the other required data on the data sheet shown in Figure 18–11, deleting the dilution gas information.

(Note.—Take care to draw all samples, calibration mixtures, and audits through the sample loop at the same pressure.)

In addition, analyze the field audit samples by connecting the audit sample cylinders to the gas sampling valve. Use the same instrument conditions as were used for the source samples. Record the data, and report the results of these analyses to the audit supervisor.

7.3 Dilution Interface Sampling and Analysis Procedure. Source samples that contain a high concentration of organic materials may require dilution prior to analysis to prevent saturating the GC detector. The apparatus required for this direct interface procedure is basically the same as that described in the Section 7.2, except a dilution system is added between the heated sample line and the gas sampling valve. The apparatus is arranged so that either a 10:1 or 100:1 dilution of the source gas can be directed to the chromatograph. A pump of larger capacity is also required, and this pump must be heated and placed in the system between the sample line and the dilution apparatus.

7.3.1 Apparatus. The equipment required in addition to that specified for the direct interface system is as follows:

7.3.1.1 Sample Pump. Leakless Teflon-coated diaphragm-type that can withstand being heated to 120°C and deliver 1.5 liters/minute.

7.3.1.2 Dilution Pumps. Two Model A–150 Komhyr Teflon positive displacement type delivering 150 cc/minute, or equivalent. As an option, calibrated flowmeters can be used in conjunction with Teflon-coated diaphragm pumps.

7.3.1.3 Valves. Two Teflon three-way valves, suitable for connecting to 6.4-mm OD Teflon tubing.

7.3.1.4 Flowmeters. Two, for measurement of diluent gas, expected delivery flow rate to be 1,350 cc/min.

7.3.1.5 Diluent Gas with Cylinders and Regulators. Gas can be nitrogen or clean dry air, depending on the nature of the source gases.

7.3.1.6 Heated Box. Suitable for being heated to 120°C, to contain the three pumps, three-way valves, and associated connections. The box should be equipped with quick connect fittings to facilitate connection of: (1) The heated sample line from the probe, (2) the gas sampling valve, (3) the calibration gas mixtures, and (4) diluent gas lines. A schematic diagram of the components and connections is shown in Figure 18–13.

(Note.—Care must be taken to leak check the system prior to the dilutions so as not to create a potentially explosive atmosphere.)

The heated box shown in Figure 18–13 is designed to receive a heated line from the probe. An optional design is to build a probe unit that attaches directly to the heated box.

In this way, the heated box contains the controls for the probe heaters, or, if the box is placed against the duct being sampled, it may be possible to eliminate the probe heaters. In either case, a heated Teflon line is used to connect the heated box to the gas sampling valve on the chromatograph.

7.3.2 Procedure. Assemble the apparatus by connecting the heated box, shown in Figure 18–13, between the heated sample line from the probe and the gas sampling valve on the chromatograph. Vent the source gas from the gas sampling valve directly to the charcoal filter, eliminating the pump and rotameter. Heat the sample probe, sample line, and heated box. Insert the probe and source thermocouple at the centroid of the duct. Measure the source temperature, and adjust all heating units to a temperature 0 to 3°C above this temperature. If this temperature is above the safe operating temperature of the Teflon components, adjust the heating to maintain a temperature high enough to prevent condensation of water and organic compounds. Verify the operation of the dilution system by analyzing a high concentration gas of known composition through either the 10:1 or 100:1 dilution stages, as appropriate. (If necessary, vary the flow of the diluent gas to obtain other dilution ratios.) Determine the concentration of the diluted calibration gas using the dilution factor and the calibration curves prepared in the laboratory. Record the pertinent data on the data sheet shown in Figure 18–11. If the data on the diluted calibration gas are not within 10 percent of the expected values, determine whether the chromatograph or the dilution system is in error, and correct it. Verify the GC operation using a low concentration standard by diverting the gas into the sample loop, bypassing the dilution system. If these analyses are not within acceptable limits, correct the dilution system to provide the desired dilution factors. Make this correction by diluting a high-concentration standard gas mixture to adjust the dilution ratio as required.

Once the dilution system and GC operations are satisfactory, proceed with the analysis of source gas, maintaining the same dilution settings as used for the standards. Repeat the analyses until two consecutive values do not vary by more than 5 percent from their mean value are obtained.

Repeat the analysis of the calibration gas mixtures to verify equipment operation. Analyze the two field audit samples using either the dilution system, or directly connect to the gas sampling valve as required. Record all data and report the results to the audit supervisor.

7.4 Adsorption Tube Procedure (Alternative Procedure). It is suggested that the tester refer to the National Institute of Occupational Safety and Health (NIOSH) method for the particular organics to be sampled. The principal interferent will be water vapor. If water vapor is present at concentrations above 3 percent, silica gel should be used in front of the charcoal. Where more than one compound is present in the emissions, then develop relative adsorptive capacity information.

7.4.1 Additional Apparatus. In addition to the equipment listed in the NIOSH method for the particular organic(s) to be sampled, the following items (or equivalent) are suggested.

7.4.1.1 Probe (Optional). Borosilicate glass or stainless steel, approximately 6-mm ID, with a heating system if water condensation is a problem, and a filter (either in-stack or out-stack heated to stack temperature) to remove particulate matter. In most instances, a plug of glass wool is a satisfactory filter.

7.4.1.2 Flexible Tubing. To connect probe to adsorption tubes. Use a material that exhibits minimal sample adsorption.

7.4.1.3 Leakless Sample Pump. Flow controlled, constant rate pump, with a set of limiting (sonic) orifices to provide pumping rates from approximately 10 to 100 cc/min.

7.4.1.4 Bubble-Tube Flowmeter. Volume accuracy within ± 1 percent, to calibrate pump.

7.4.1.5 Stopwatch. To time sampling and pump rate calibration.

7.4.1.6 Adsorption Tubes. Similar to ones specified by NIOSH, except the amounts of adsorbent per primary/backup sections are 800/200 mg for charcoal tubes and 1040/260 mg for silica gel tubes. As an alternative, the tubes may contain a porous polymer adsorbent such as Tenax GC or XAD–2.

7.4.1.7 Barometer. Accurate to 5 mm Hg, to measure atmospheric pressure during sampling and pump calibration.

7.4.1.8 Rotameter. 0 to 100 cc/min, to detect changes in flow rate during sampling.

7.4.2 Sampling and Analysis. It is suggested that the tester follow the sampling and analysis portion of the respective NIOSH method section entitled "Procedure." Calibrate the pump and limiting orifice flow rate through adsorption tubes with the bubble tube flowmeter before sampling. The sample system can be operated as a "recirculating loop" for this operation. Record the ambient temperature and barometric pressure. Then, during sampling, use the rotameter to verify that the pump and orifice sampling rate remains constant.

Use a sample probe, if required. Minimize the length of flexible tubing between the probe and adsorption tubes. Several adsorption tubes can be connected in series, if the extra adsorptive capacity is needed. Provide the gas sample to the sample system at a pressure sufficient for the limiting orifice to function as a sonic orifice. Record the total time and sample flow rate (or the number of pump strokes), the barometric pressure, and ambient temperature. Obtain a total sample volume commensurate with the expected concentration(s) of the volatile organic(s) present, and recommended sample loading factors (weight sample per weight adsorption media). Laboratory tests prior to actual sampling may be necessary to predetermine this volume. When more than one organic is present in the emissions, then develop relative adsorptive capacity information. If water vapor is present in the sample at concentrations above 2 to 3 percent, the adsorptive capacity may be severely reduced. Operate the gas chromatograph according to the manufacture's instructions. After establishing optimum conditions, verify and document these conditions during all operations. Analyze the audit samples (see Section 7.4.4.3), then the emission samples. Repeat the analysis of each sample until the relative deviation of two consecutive injections does not exceed 5 percent.

7.4.3 Standards and Calibration. The standards can be prepared according to the respective NIOSH method. Use a minimum of three different standards; select the concentrations to bracket the expected average sample concentration. Perform the calibration before and after each day's sample analyses. Prepare the calibration curve by using the least squares method.

7.4.4 Quality Assurance.

7.4.4.1 Determination of Desorption Efficiency. During the testing program, determine the desorption efficiency in the expected sample concentration range for each batch of adsorption media to be used. Use an internal standard. A minimum desorption efficiency of 50 percent shall be obtained. Repeat the desorption determination until the relative deviation of two consecutive determinations does not exceed 5 percent. Use the average desorption efficiency of these two consecutive determinations for the correction specified in Section 7.4.4.5. If the desorption efficiency of the compound(s) of interest is questionable under actual sampling conditions, use of the Method of Standard Additions may be helpful to determine this value.

7.4.4.2 Determination of Sample Collection Efficiency. For the source samples, analyze the primary and backup portions of the adsorption tubes separately. If the backup portion exceeds 10 percent of the total amount (primary and backup), repeat the sampling with a larger sampling portion.

7.4.4.3 Analysis Audit. Immediately before the sample analyses, analyze the two audits in accordance with Section 7.4.2. The analysis audit shall agree with the audit concentration with 10 percent.

7.4.4.4 Pump Leak Checks and Volume Flow Rate Checks. Perform both of these checks immediately after sampling with all sampling train components in place. Perform all leak checks according to the manufacturer's instructions, and record the results. Use the bubble-tube flowmeter to measure the pump volume flow rate with the orifice used in the test sampling, and the result. If it has changed by more than 5 but less than 20 percent, calculate an average flow rate for the test. If the flow rate has changed by more than 20 percent, recalibrate the pump and repeat the sampling.

7.4.4.5 Calculations. All calculations can be performed according to the respective NIOSH method. Correct all sample volumes to standard conditions. If a sample dilution system has been used, multiply the results by the appropriate dilution ratio. Correct all results by dividing by the desorption efficiency (decimal value). Report results as ppm by volume, dry basis.

7.5 Reporting of Results. At the completion of the field analysis portion of the study, ensure that the data sheets shown in Figure 18–11 have been completed. Summarize this data on the data sheets shown in Figure 18–15.

8. *Bibliography*

1. American Society for Testing and Materials. C_1 Through C_5 Hydrocarbons in

the Atmosphere by Gas Chromatography. ASTM D 2820–72, Part 23. Philadelphia, Pa. 23:950–958. 1973.

2. Corazon, V. V. Methodology for Collecting and Analyzing Organic Air Pollutants. U.S. Environmental Protection Agency. Publication No. EPA–600/2–79–042. February 1979.

3. Dravnieks, A., B. K. Krotoszynski, J. Whitfield, A. O'Donnell, and T. Burgwald. Environmental Science and Technology. *5*(12):1200–1222. 1971.

4. Eggertsen, F. T., and F. M. Nelsen. Gas Chromatographic Analysis of Engine Exhaust and Atmosphere. Analytical Chemistry. *30*(6): 1040–1043. 1958.

5. Feairheller, W. R., P. J. Marn, D. H. Harris, and D. L. Harris. Technical Manual for Process Sampling Strategies for Organic Materials. U.S. Environmental Protection Agency. Research Triangle Park, N.C. Publication No. EPA 600/2–76–122. April 1976. 172 p.

6. FR, 39 FR 9319–9323. 1974.

7. FR, 39 FR 32857–32860. 1974.

8. FR, 41 FR 23069–23072 and 23076–23090. 1976.

9. FR, 41 FR 46569–46571. 1976.

10. FR, 42 FR 41771–41776. 1977.

11. Fishbein, L. Chromatography of Environmental Hazards, Volume II. Elsevier Scientific Publishing Company. New York, NY. 1973.

12. Hamersma, J. W., S. L. Reynolds, and R. F. Maddalone. EPA/IERL–RTP Procedures Manual: Level 1 Environmental Assessment. U.S. Environmental Protection Agency. Research Triangle Park, N.C. Publication No. EPA 600/276–160a. June 1976. 130 p.

13. Harris, J. C., M. J. Hayes, P. L. Levins, and D. B. Lindsay. EPA/IERL–RTP Procedures for Level 2 Sampling and Analysis of Organic Materials. U.S. Environmental Protection Agency. Research Triangle Park, N.C. Publication No. EPA 600/7–79–033. February 1979. 154 p.

14. Harris, W. E., H. W. Habgood. Programmed Temperature Gas Chromatography. John Wiley & Sons, Inc. New York. 1966.

15. Intersociety Committee. Methods of Air Sampling and Analysis. American Health Association. Washington, D.C. 1972.

16. Jones, P. W., R. D. Grammar, P. E. Strup, and T. B. Stanford. Environmental Science and Technology. *10*:806–810. 1976.

17. McNair Han Bunelli, E. J. Basic Gas Chromatography. Consolidated Printers. Berkeley. 1969.

18. Nelson, G. O. Controlled Test Atmospheres, Principles and Techniques. Ann Arbor. Ann Arbor Science Publishers. 1971. 247 p.

19. NIOSH Manual of Analytical Methods, Volumes 1, 2, 3, 4, 5, 6, 7. U.S. Department of Health and Human Services National Institute for Occupational Safety and Health. Center for Disease Control. 4676 Columbia Parkway, Cincinnati, Ohio 45226. April 1977–August 1981. May be available from the Superintendent of Documents, Government Printing Office, Washington, D.C. 20402. Stock Number/Price: Volume 1—017–033–00267–3/$13, Volume 2—017–033–00260–6/$11, Volume 3—017–033–00261–4/$14, Volume 4—017–033–00317–3/$7.25, Volume 5—017–033–00349–1/$10, Volume 6—017–033–00369–6/$9, and Volume 7—017–033–00396–5/$7. Prices subject to change. Foreign orders add 25 percent.

20. Schuetzle, D., T. J. Prater, and S. R. Ruddell. Sampling and Analysis of Emissions from Stationary Sources; I. Odor and Total Hydrocarbons. Journal of the Air Pollution Control Association. *25*(9):925–932. 1975.

21. Snyder, A. D., F. N. Hodgson, M. A. Kemmer and J. R. McKendree. Utility of Solid Sorbents for Sampling Organic Emissions from Stationary Sources. U.S. Environmental Protection Agency. Research Triangle Park, N.C. Publication No. EPA 600/2–76–201. July 1976. 71 p.

22. Tentative Method for Continuous Analysis of Total Hydrocarbons in the Atmosphere. Intersociety Committee, American Public Health Association. Washington, D.C. 1972. p. 184–186.

23. Zwerg, G., CRC Handbook of Chromatography, Volumes I and II. Sherma, Joseph (ed.). CRC Press. Cleveland. 1972.

BILLING CODE 6560-50-M

I. Name of company _____ Date _____
Address _____
_____
Contacts _____ Phone _____
_____ _____
Process to be sampled _____
_____
_____
Duct or vent to be sampled _____
_____

II. Process description _____
_____
_____
_____
_____
Raw material _____
_____
_____
Products _____
_____
_____
Operating cycle
Check: Batch _____ Continuous _____ Cyclic _____
Timing of batch or cycle _____
Best time to test _____

Figure 18-1. Preliminary survey data sheet.

III. Sampling site
A. Description
Site description _____
Duct shape and size _____
Material _____
Wall thickness _____ inches
Upstream distance _____ inches _____ diameter
Downstream distance _____ inches _____ diameter
Size of port _____
Size of access area _____
Hazards _____ Ambient temp. _____ °F

B. Properties of gas stream
Temperature _____ °C _____ °F, Data source _____
Velocity _____, Data source _____
Static pressure ___ inches H_2O, Data source _____
Moisture content _____ %, Data source _____
Particulate content _____, Data source _____
Gaseous components

N_2	_____ %	Hydrocarbons	_____ ppm
O_2	_____ %	_____	_____
CO	_____ %	_____	_____
CO_2	_____ %	_____	_____
SO_2	_____ %	_____	_____

Hydrocarbon components

_____	_____ ppm
_____	_____ ppm
_____	_____ ppm
_____	_____ ppm
_____	_____ ppm
_____	_____ ppm

Figure 18-1 (continued). Preliminary survey data sheet.

C. Sampling considerations

Location to set up GC _____

_____

Special hazards to be considered _____

_____

Power available at duct _____

Power available for GC _____

Plant safety requirements _____

_____

Vehicle traffic rules _____

_____

Plant entry requirements _____

_____

Security agreements _____

_____

Potential problems _____

_____

D. Site diagrams. (Attach additional sheets if required).

Figure 18-1 (continued). Preliminary survey data sheet.

Components to be analyzed	Expected concentration

Suggested chromatographic column _____

_____

Column flow rate ____ml/min Head pressure____ mm Hg

Column temperature:

Isothermal _____°C

Programmed from _____°C to ____°C at ____°C/min

Injection port/sample loop temperature _____°C

Detector temperature _____°C

Detector flow rates: Hydrogen _____ml/min.

head pressure____ mm Hg

Air/Oxygen _____ml/min,

head pressure____ mm Hg

Chart speed _____ inches/minute

Compound data:

Compound	Retention time	Attenuation

Figure 18-2. Chromatographic conditions data sheet.

Calibration Curve Data - Volatile and Liquid Samples Collected in a Tedlar Bag

	Blank	Mixture 1	Mixture 2	Mixture 3
Size of Tedlar bag (liters)				
Dilution gas (name)				
Vol. of dilution gas (liters)				
Component (name)				
Volume of component (ml)				
Average meter temp. (°C)				
Average meter pressure (nm)				
Atmospheric pressure (nm)				
Density of liquid component (g/ml)				
Sample loop volume (ml)				
Sample loop temp. (°C)				
Carrier gas flow rate (ml/min)				
Column temperature				
initial (°C)				
program rate (°C/min)				
final (°C)				
Injection time (24 hr. basis)				
Distance to peak (cm)				
Chart speed (cm/min)				
Retention time (min)				
Calculated concentration (ppm)				
Attenuator setting				
Peak height (mm)				
Peak area (mm^2)				
Area x attenuation				

Plot peak area x attenuation against concentration to obtain calibration curve.

Figure 18-3.- Calibration curve data sheet - injection of volatile sample into Tedlar bag.

Rotameter number _____

Gas used _____

Method: Bubble meter _____ Spirometer _____ Wet test meter _____

Rotameter construction _____

Float type _____

Laboratory temperature (T obs.) _____ °C _____ °F

Laboratory pressure (P obs.) _____ in Hg _____ mm Hg

1. Flowmeter reading	Time (min)	Gas volume[a]	Flow rate (lab conditions)[b]

[a] Vol. of gas may be measured in milliliters, liters or cubic feet.

[b] Convert to standard conditions (20° C and 760 mm Hg).

$$Q_{STD} = Q_{obs} \left(\frac{760 \times T\ obs.}{P\ obs. \times 20} \right)^{1/2}$$

Flowmeter reading	Flow rate (STD conditions)

Plot meter reading against flow rate (std) and draw smooth curve.

Figure 18-4. Rotameter calibration data sheet.

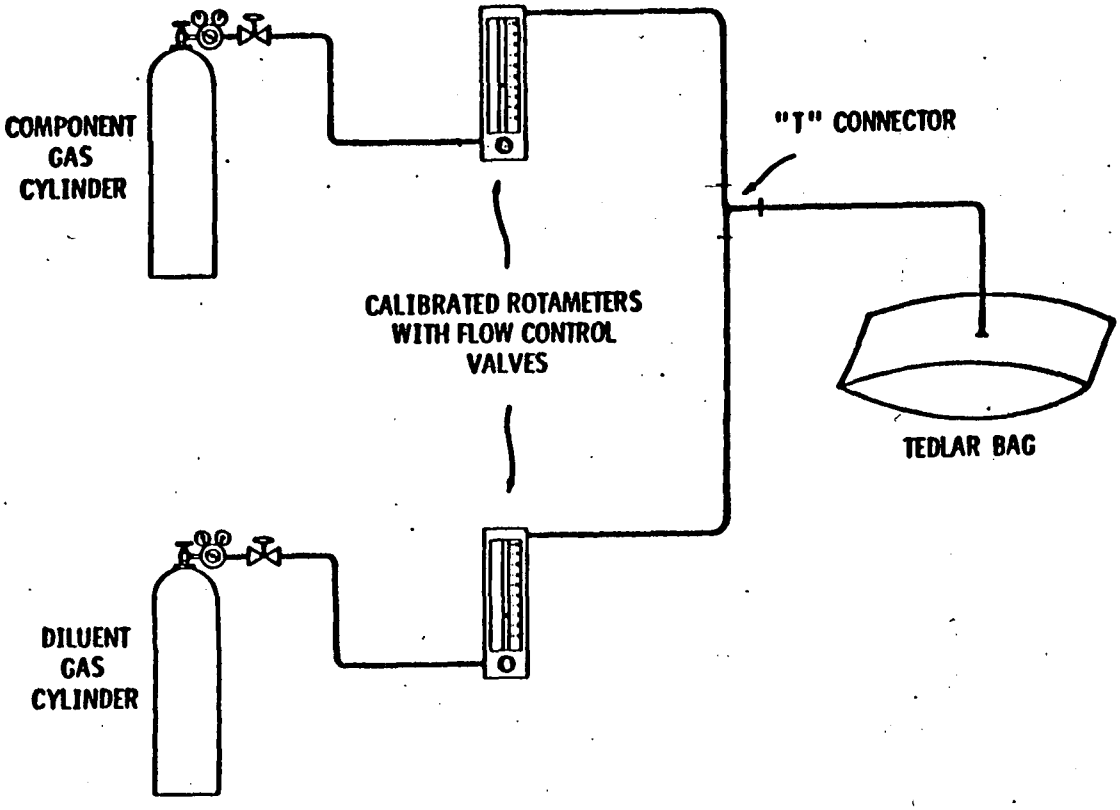

Figure 18-5. Single-stage calibration gas dilution system.

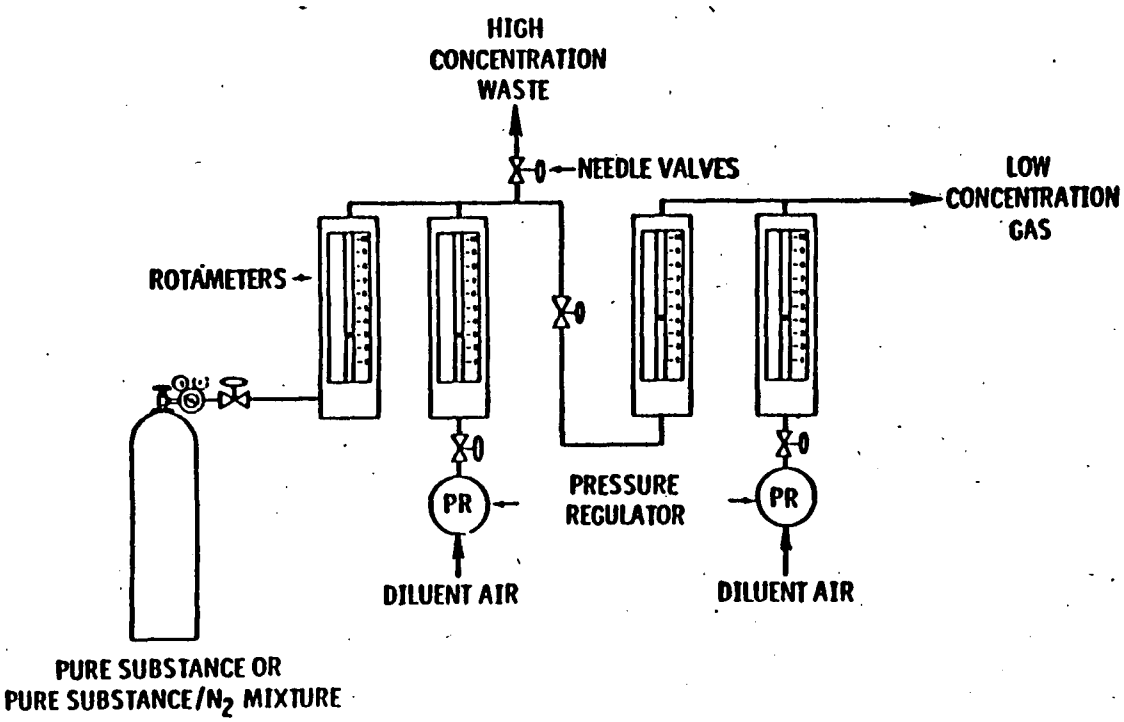

Figure 18-6. Two-stage dilution apparatus.

1. High concentration gas mixture

Component _____ Concentration _____ ppm

Diluent gas _____

2. Dilution and analysis data Date _____

Stage 1	Mixture 1	Mixture 2	Mixture 3
Component gas-rotameter reading			
Diluent gas-rotameter reading			
Ambient temp. (°C)			
Manometer reading, inches H_2O			
Flow rate component gas (ml/min)			
Flow rate diluent gas (ml/min)			
Stage 2			
Component gas-rotameter reading			
Diluent gas-rotameter reading			
Flow rate component gas (ml/min)			
Flow rate diluent gas (ml/min)			
Calculated concentration (ppm)			
Analysis			
Sample loop volume (ml)			
Sample loop temp. (°C)			
Carrier gas flow rate (ml/min)			
Column temperature			
initial (°C)			
program rate (°C/min)			
final (°C)			
Injection time (24-hr. basis)			
Distance to peak (inches)			
Chart speed (inch/min)			
Retention time (min)			
Attenuator factor			
Peak height (mm)			
Peak area (mm^2)			
Area x attenuation factor (mm^2)			

Plot peak area x attenuator factor against concentration to obtain calibration curve.

Figure 18-7. Calibration curve data sheet - dilution method.

3. Low concentration standard

Known concentration (ppm)	
Retention time (min)	
Injection time (24-hour basis)	
Attenuation factor	
Peak height (mm)	
Peak area (mm^2)	
Peak area x attenuation (mm^2)	
Calculated concentration (ppm)	
Deviation (%)	

4. Audit samples

	Sample 1	Sample 2
Retention time (min)		
Injection time 24-hour basis)		
Attenuation factor		
Peak height (mm)		
Peak area (mm^2)		
Peak area x attenuation factor		
Measured concentration		
Data reported on (date)		
Data reported by (initial)		
Certified concentration (ppm)		
Deviation (%)		

Note: If a pump is used instead of a rotameter for component gas flow, substitute pump delivery rate for rotameter readings).

Figure 18-7 (continued). Calibration curve data sheet - dilution method.

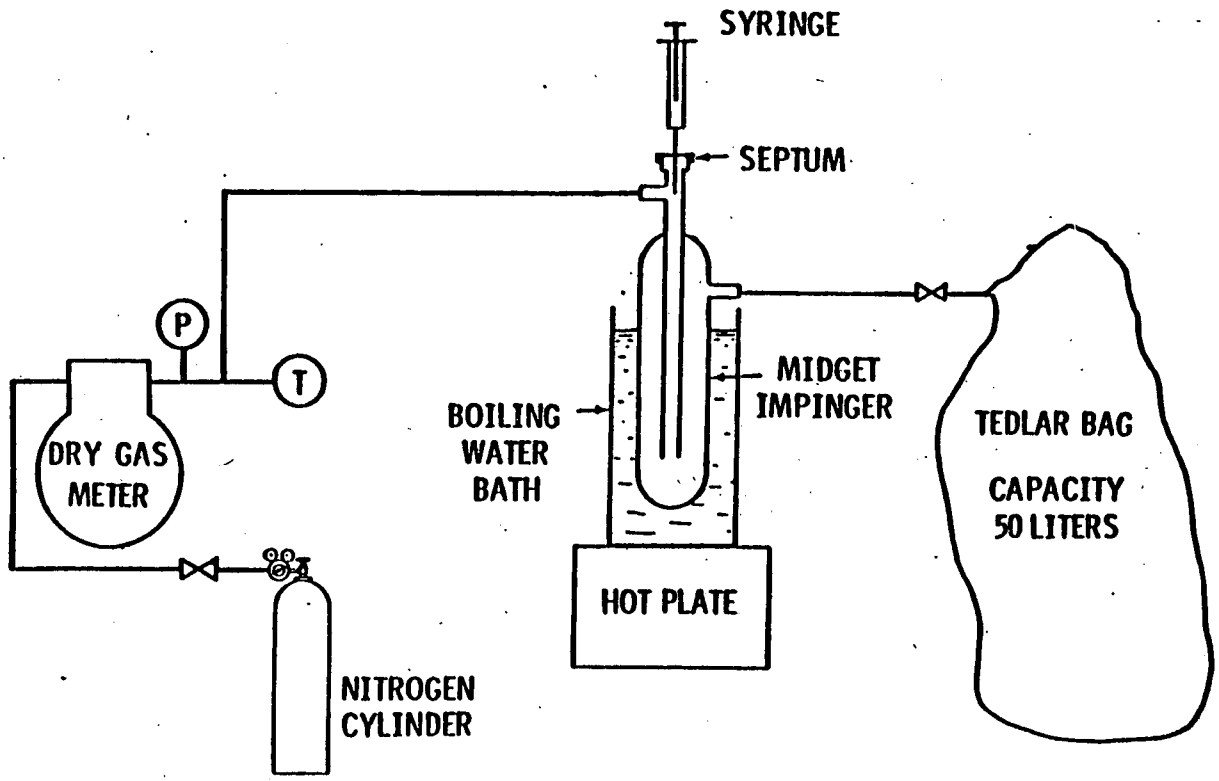

Figure 18-8. Apparatus for preparation of liquid materials.

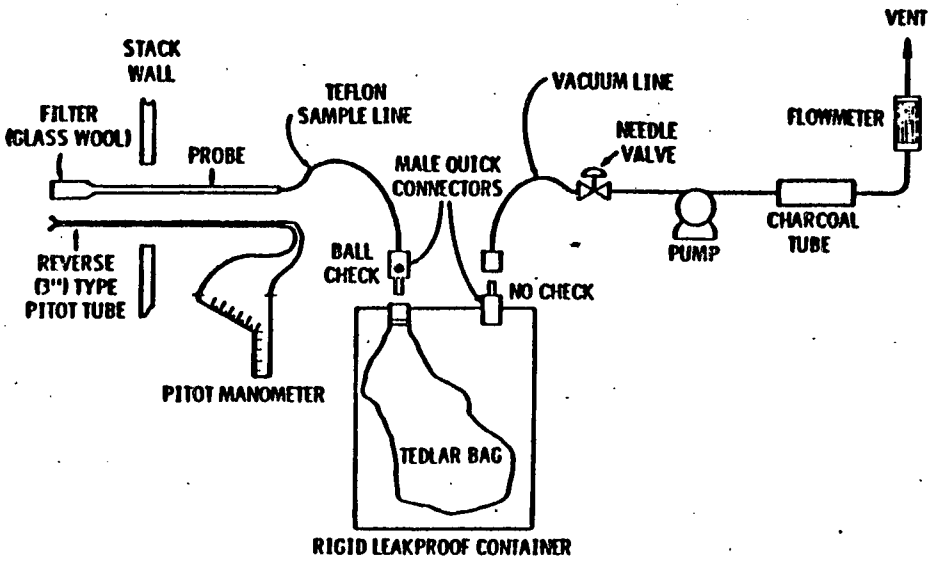

Figure 18-9. Integrated bag sampling train.

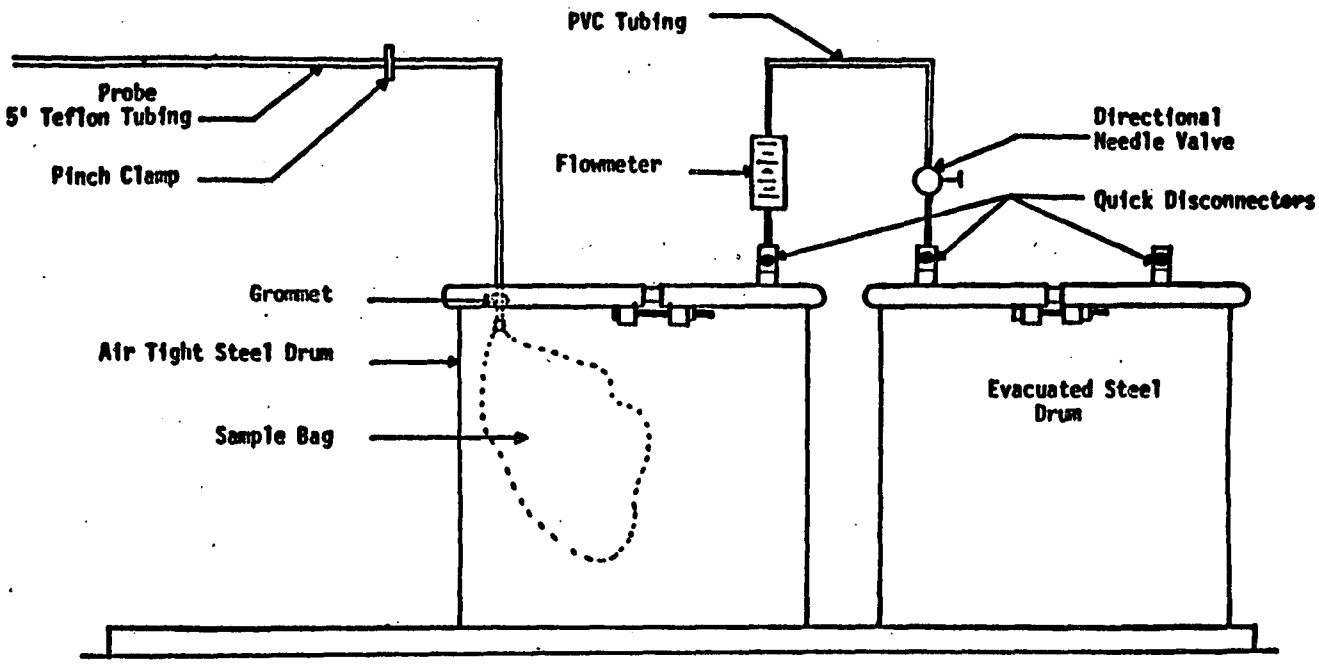

Figure 18-9a. Explosion risk gas sampling method.

Plant_____ Date_____

Site_____

	Sample 1	Sample 2	Sample 3
Source temperature (°C)	____	____	____
Barometric pressure (mm Hg)	____	____	____
Ambient temperature (°C)	____	____	____
Sample flow rate (appr.)	____	____	____
Bag number	____	____	____
Start time	____	____	____
Finish time	____	____	____

Figure 18-10. Field sample data sheet - Tedlar bag collection method.

Plant_____ Date_____

Location_____

1. General information

Source temperature (°C)	_____
Probe temperature (°C)	_____
Ambient temperature (°C)	_____
Atmospheric pressure (mm)	_____
Source pressure ("Hg)	_____
Absolute source pressure (mm)	_____
Sampling rate (liter/min)	_____
Sample loop volume (ml)	_____
Sample loop temperature (°C)	_____
Columnar temperature:	
Initial (°C)/time (min)	_____
Program rate (°C/min)	_____
Final (°C)/ time (min)	_____
Carrier gas flow rate (ml/min)	_____
Detector temperature (°C)	_____
Injection time (24-hour basis)	_____
Chart speed (mm/min)	_____
Dilution gas flow rate (ml/min)	_____
Dilution Gas used (symbol)	_____
Dilution ratio	_____

Figure 18-11. Field analysis data sheets.

2. Field Analysis Data - Calibration Gas

Run No._____ Time_____

Components	Area	Attenuation	A x A Factor	Conc. (ppm)

Run No._____ Time_____

Components	Area	Attenuation	A x A Factor	Conc. (ppm)

Run No._____ Time_____

Components	Area	Attenuation	A x A Factor	Conc. (ppm)

Figure 18-11 (continued). Field analysis data sheets.

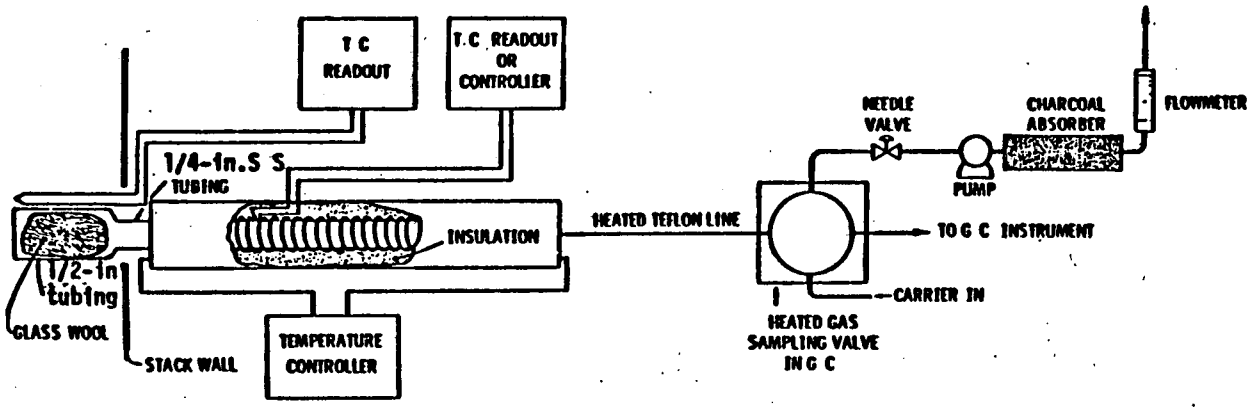

Figure 18-12. Direct interface sampling system.

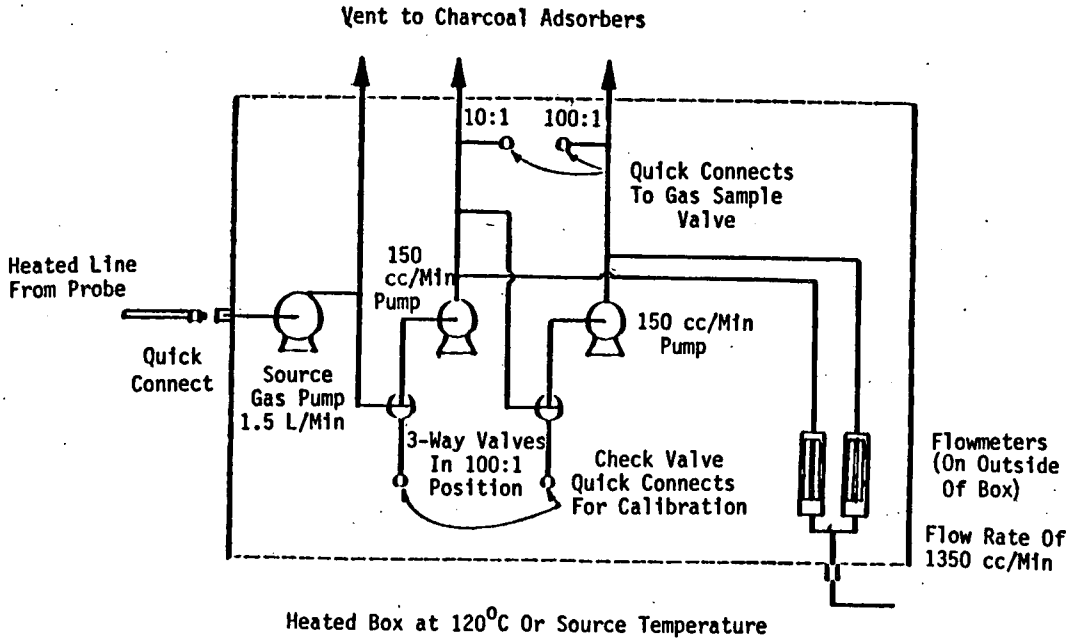

Figure 18-13. Schematic diagram of the heated box required for dilution of sample gas.

BILLING CODE 6560-50-C

Gaseous Organic Sampling and Analysis Check List

(Respond with initials or number as appropriate)

		Date
1. Presurvey data:		
A. Grab sample collected	☐	
B. Grab sample analyzed for composition	☐	
Method GC	☐	☐
GC/MS	☐	☐
Other	☐	☐
C. GC-FID analysis performed	☐	
2. Laboratory calibration data:		
A. Calibration curves prepared	☐	
Number of components	☐	☐
Number of concentrations/component (3 required)	☐	☐
B. Audit samples (optional):		
Analysis completed	☐	
Verified for concentration	☐	
OK obtained for field work	☐	
3. Sampling procedures:		
A. Method:		
Bag sample	☐	☐
Direct interface	☐	☐
Dilution interface	☐	☐
B. Number of samples collected	☐	
4. Field analysis:		
A. Total hydrocarbon analysis performed	☐	
B. Calibration curve prepared	☐	
Number of components	☐	☐
Number of concentrations per component (3 required)	☐	☐

Figure 18–14. Sampling and analysis check.

Gaseous Organic Sampling and Analysis Data

Plant— _____

Date— _____

Location _____

	Source sample 1	Source sample 2	Source sample 3
1. General information:			
Source temperature (°C)			
Probe temperature (°C)			
Ambient temperature (°C)			
Atmospheric pressure (mm Hg)			
Source pressure (mm Hg)			
Sampling rate (ml/min)			
Sample loop volume (ml)			
Sample loop temperature (°C)			
Sample collection time (24-hr basis)			
Column temperature:			
Initial (°C)			
Program rate (°C/min)			
Final (°C)			
Carrier gas flow rate (ml/min)			
Detector temperature (°C)			
Chart speed (cm/min)			
Dilution gas flow rate (ml/min)			
Diluent gas used (symbol)			
Dilution ratio			

Performed by (signature): _____

Date: _____

Figure 18–14. Sampling and analysis sheet.

6. In Appendix A of Part 60, the title of Method 22 is revised to read as follows:

Method 22—Visual Determination of Fugitive Emissions from Material Sources and Smoke Emissions from Flares.

7. In Appendix A of Part 60, Section 1 of Method 22, *Introduction*, is amended by adding the following sentence to the end of the first paragraph:

* * * * *

This method is used also to determine visible smoke emissions from flares used for combustion of waste process materials.

8. In Appendix A of Part 60, Section 1 of Method 22, *Introduction*, is amended by removing the phrase "Reference Test" from the third sentence of the second paragraph.

9. In Appendix A of Part 60, Paragraph 2.1 of Section 2 of Method 22 is amended by adding a second paragraph as follows:

* * * * *

2.1 * * *

This method also is applicable for the determination of the frequency of visible smoke emissions from flares.

* * * * *

10. In Appendix A of Part 60, Paragraph 2.2 of Section 2 of Method 22 is revised as follows:

* * * * *

2.2 *Principle.* Fugitive emissions produced during material processing, handling, and transfer operations or smoke emissions from flares are visually determined by an observer without the aid of instruments.

* * * * *

11. In Appendix A of Part 60, Method 22 Section 3, *Definitions*, Paragraphs 3.4 and 3.5 are revised to read as follows:

* * * * *

3.4 *Smoke Emissions.* Pollutant generated by combustion in a flare and occurring immediately downstream of the flame. Smoke occurring within the flame, but not downstream of the flame, is not considered a smoke emission.

3.5 *Observation Period.* Accumulated time period during which observations are conducted, not to be less than the period specified in the applicable regulation.

* * * * *

12. In Appendix A of Part 60, Method 22 is amended by adding Figures 22–1 and 22–2 at the end of the method.

BILLING CODE 6560–50–M

[FR Doc. 83-27945 Filed 10-17-83; 8:45 am]
BILLING CODE 6560-50-C

FUGITIVE OR SMOKE EMISSION INSPECTION
OUTDOOR LOCATION

Company _____	Observer _____
Location _____	Affiliation _____
Company representative _____	Date _____
Sky Conditions _____	Wind direction _____
Precipitation _____	Wind speed _____
Industry _____	Process unit _____

Sketch process unit; indicate observer position relative to source and sun; indicate potential emission points and/or actual emission points.

OBSERVATIONS	Clock time	Observation period duration, min:sec	Accumulated emission time, min:sec
Begin Observation			
End observation			

Figure 22-1

7

Fugitive Emission Inspection Indoor Location Table

FUGITIVE EMISSION INSPECTION
INDOOR LOCATION

Company _____	Observer _____
Location _____	Affiliation _____
Company Representative _____	Date _____
Industry _____	Process unit _____

Light type (fluorescent, incandescent, natural _____

Light location (overhead, behind observer, etc.) _____

Illuminance (lux or footcandles) _____

Sketch process unit; indicate observer position relative to source; indicate potential emission points and/or actual emission points.

OBSERVATIONS	Clock time	Observation period duration, min:sec	Accumulated emission, time, min:sec
Beginning observation			
End observation			

Figure 22-2

federal register

Tuesday
October 18, 1983

Part III

Department of Transportation

Federal Aviation Administration

Implementation of Mode S in the National Airspace System; Advance Notice of Proposed Rulemaking

DEPARTMENT OF TRANSPORTATION

Federal Aviation Administration

14 CFR Parts 43, 91, 121, 127, and 135

[Docket No. 23799; Notice No. 83-16]

Implementation of Mode S in the National Airspace System

AGENCY: Federal Aviation Administration (FAA), DOT.

ACTION: Advance notice of proposed rulemaking (ANPRM).

SUMMARY: This announces proposed use of Mode S transponders in the National Airspace System (NAS). The Mode S transponder is considered to be a key piece of avionic equipment needed to participate in and receive service benefits of the automated NAS. This document proposes furture installation and use of Mode S transponders and altitude reporting equipment in aircraft operating within certain airspace areas. Comments on this proposal are solicited, particularly regarding the potential economic impact of the proposal.

DATES: Comments must be received on or before January 17 1984.

ADDRESS: Send comments on the proposal in duplicate to: Federal Aviation Administration, Office of the Chief Counsel; Attn: Rules Docket (AGC-204), Docket No. 23799, 800 Independence Ave., SW., Washington, D.C. 20591; or deliver comments in duplicate to: FAA Rules Docket, Room 916, 800 Independence Ave., SW., Washington, D.C. Comments may be examined in the Rules Docket weekdays, except Federal holidays, between 8:30 a.m. and 5 p.m.

FOR FURTHER INFORMATION CONTACT: Gene Falsetti, Air Traffic Rules Branch, Airspace-Rules and Aeronautical Information Division, Air Traffic Service, Federal Aviation Administration, 800 Independence Ave., SW., Washington, D.C. 20591; telephone: (202) 426-3128.

SUPPLEMENTARY INFORMATION:

Comments Invited

Interested persons are invited to participate in the proposal by submitting such written data, views, or arguments as they may desire. Comments that provide the factual basis supporting the views and suggestions presented are particularly helpful in developing reasoned decisions on the proposals. Comments are specifically invited on the overall economic, environmental, and energy aspects of the proposals. Communications should identify the notice number and be submitted in duplicate to the address listed above. Commenters wishing the FAA to acknowledge receipt of their comments on this advance notice must submit with those comments a self-addressed, stamped postcard on which the following statement is made: "Comments to Docket No.23799." The postcard will be date/time stamped and returned to the commenter. All communications received before the specified closing date for comments will be considered by the Administrator before taking any future action on the proposal. The proposals contained in this notice may be changed in light of comments received. All comments submitted will be available for examination in the docket both before and after the closing date for comments. A report summarizing each substantive public contact with FAA personnel concerned with this proposal will be filed in the docket.

Availability of ANPRM

Any person may obtain a copy of this ANPRM by submitting a request to the Federal Aviation Administration, Office of Public Affairs, Attention, Public Information Center, APA-430, 800 Independence Avenue, SW., Washington, D.C. 20591, or by calling (202) 426-8058. Communications must identify the notice number of this ANPRM. Persons interested in being placed on a mailing list for future notices should also request a copy of Advisory Circular No. 11-2, "Notice of Proposed Rulemaking Distribution System," which describes the application procedures.

Background

On January 28, 1982, the FAA announced a comprehensive plan for modernizing and improving air traffic control and airway facilities from the present to the year 2001. The plan for the National Airspace System (NAS) addresses problems of how best to accommodate spiraling demands for aviation services, limit costs, establish the technological basis for the NAS, and provide and improve facilities.

Concurrent with the National Airspace System Plan (NASP) announcement, a plan was developed for use of the Mode S transponder in the NAS. The Mode S transponder is considered to be an important airborne link to NAS. The proposed role of Mode S is briefly described in this notice.

The NAS Plan represents the capital and associated actions necessary to modernize the NAS to meet the public need through the turn of the century. The plan seeks efficient realization of three major goals: (1) System safety, (2) efficient use of airspace, and (3) efficient use of FAA resources. Automation is fundamental to all objectives through which these goals may be realized.

The NASP is designed to yield significant improvements in service to the airspace user as well as cost savings to the taxpayer, the airspace user, and the air traffic control (ATC) system. Supported by increased automation, it is engineered to produce measureable results in an expanded scope, quality, and efficiency of ATC services. User cost saving efficiencies are expected through reductions in delays and fuel consumption due to improved traffic handing capabilities and the increased ability of the ATC system to accommodate direct, pilot-preferred routings.

Principal features of the plan are replacement of current generation automation equipment and extended use of automation in terminal and en route ATC, flight services, and subsystems that support and provide radar surveillance and communications. Automated functions are expected to contribute to reduction of delays, enhanced safety efforts, and a significant reduction in the number of ATC and equipment maintenance personnel required to operate the ATC system. Closely associated with increased automation are the programs and improvements designed to achieve state-of-the-art ATC separation and advisory services. They include advanced beacon-based surveillance to provide for accurate, relatively interference-free aircraft identify, altitude and position information, and programs whose end products will help ATC to integrate, separate, meter, and otherwise provide air traffic services. They also include terminal and en route programs to organize and manage the sytsem-wide flow of air traffic.

A highly automated NAS will require certain changes in the airborne systems to enable users to participate in, and benefit from, the system. Key avionics considered necessary for full participation include the Mode S transponder with its associated automatic pressure altitude reporting equipment. The Mode S system is an evolutionary advancement of the Air Traffic Control Radar Beacon System (ATCRBS). Its functions will aid in providing the enhanced surveillance and communication capabilities necessary for effective operation of the automated ATC system. The objective of this new system is to improve surveillance reliability and accuracy while also supporting ground-air-ground data link.

The improved surveillance and communication systems are designed with capacities to meet future ATC and NAS Systems needs. Moreover, Mode S is expected to provide a variety of valuable support functions to ATC and the NAS. Briefly, Mode S is expected to help accommodate future user demand with increased efficiency, support automated functions of the NAS, provide dynamic advisory and flight safety information to the pilot, and enhance ATC services while helping to increase controller productivity.

The capability for an evolutionary transition from ATCRBS to Mode S has been achieved by providing a high degree of compatibility between Mode S and ATCRBS. Mode S uses the same interrogation and reply frequencies as ATCRBS. In addition, the Mode S ground station performs the ATCRBS funcitons as well as the Mode S functions. This degree of compatibility permits a smooth transition in which Mode S ground stations provide surveillance of ATCRBS-equipped aircraft and Mode S transponders reply to ATCRBS ground stations. Mode S can therefore be introduced into the present ATCRBS environment without inpacting present services.

A principal feature of the Mode S system is that each aircraft is assigned a unique address code. Using this unique code, interrogations can be directed to a particular aircraft and replies can be identified without ambiguity. Channel interference is minimized because a sensor can limit its interrogation to targets of interest. In addition, by proper timing of interrogations, replies from closely-spaced aircraft can be received without mutual interference. It is the discrete addressing and digital encoding of Mode S transmissions which also permit their use as a digital data link. The interrogation and reply formats of the Mode S system have been designed to contain sufficient coding space to permit the transmission of data. The Mode S transponder will function as a modem in the support of data link functions. The Mode S transponder and addditional data link equipment (including appropriate input/output devices) will be necessary for full use of data link services.

It is believed that Mode S will provide a major system enhancement. Under this proposal, Mode S will be relied upon to furnish to air traffic control accurate, reliable and positive information on aircraft identity, position, and altitude. By providing the basic information essential to the efficient operation of the total system, it may be considered as the airborne link to NAS. With the data link capability provided by Mode S and complementing equipment, the Mode S system can provide a computer to cockpit message medium for nonverbal transmissions of ATC clearances, traffic advisories, weather information, and other services. Permanent copies of messages can be provided by system equipment when appropriate.

The Mode S transponder and associated automatic pressure altitude reporting equipment are also integral components of the airborne, ground-independent, Traffic Alert and Collision Avoidance System (TCAS). Mandatory carriage of TCAS is not planned, however, it is expected there will be widespread voluntary use of the system.

The Mode S data link capability to deliver the most currently available weather information may well be considered as the most promising flight safety and efficiency benefit to the pilot/operator. The potential value of weather data products that become readily accessible via Mode S is apparent. Very often, a contributing factor to aircraft accidents has been shown to be the inadequacy or real-time unavailability of current weather information. Some of the weather products currently considered as candidates for data link transmission on a request/reply basis are surface observations, digital weather maps, terminal forecasts, alert weather watches, winds aloft forecasts, convective significant meteorological reports (SIGMETS), and pilot reports (PIREPS). The Mode S transponder with appropriate message capability, associated data link equipment, and a display will be required to receive the described weather information products. Some weather information via data link is expected to be available beginning in 1988 with enhanced services available in later years.

As it is seen in the total NAS, the Mode S/Data Link system is part of a major ground-to-air subsystem. This subsystem comprises the navigation, surveillance, and communication facilities and equipment systems. In the NAS Plan, each separate system is planned to be upgraded. To further cost savings and efficiency, facilities will be consolidated. To effect consolidation, facilities will be "networked" to reduce their number, but coverage will be assured. Surveillance will be provided by the upgraded enroute and terminal radar and radar beacon systems. As a major component of the surveillance system, Mode S coverage is planned to be provided above 12,500 feet MSL in enroute airspace, within TCA's, and down to the surface at qualifying airports. It is further planned that coverage will be eventually extended down to 6,000 feet MSL or the minimum enroute altitude, whichever is higher.

The first Mode S/Data Link ground site is expected to be operational and providing surveillance services and data link services by 1988. By 1991, 137 systems are expected to provide surveillance coverage at selected high density terminals, support and enroute sites. Additional systems will extend surveillance/data link operation down to 6,000 feet MSL by 2000. To derive improved benefits from many aspects, i.e., from coverage, from services available in NAS, or from ATC services in designated airspace, aircraft will have to be equipped with the Mode S transponder.

In summary, the automated, consolidated NAS is designed to accommodate growth of aviation in a cost-efficient manner. Airspace users are expected to benefit from the participatory role of Mode S in NAS and the overall cost effectiveness of the total system.

The Proposal

The FAA is providing advance notice of its proposal for use of Mode S in the NAS. The proposal is recognized as one that would have long-range and far-reaching effects. The FAA, therefore, solicits comments from all interested parties, on all of its aspects. These comments will be given full consideration prior to any future agency action on this proposal.

To help effect use of Mode S in NAS, an action required of the FAA would be issuance of a technical standard order (TSO) for airborne Mode S transponder equipment. The draft TSO for the Mode S transponder equipment is expected to be issued this year. It is planned that, with issuance of the TSO for Mode S, TSO authorization to manufacture ATCRBS transponders will be terminated effective in 1986.

Consistent with FAA practice, the new TSO for Mode S will be published for comment. The termination of the approval to manufacture under the existing ATCRBS TSO's, through issuance of the Mode S TSO, will be in accordance with provisions of § 21.621 of the FAR.

Another action to effect use of Mode S in NAS would be amendment of certain FAR's, i.e., Parts 43, 91, 121, 127, and 135.

The proposed FAR amendments, foreseen in 1992, would include:

1. An amendment to Part 43 to set forth appropriate tests and testing procedures to ensure the continuing

correct functioning of Mode S transponders.

2. Amendments to sections of Part 91 so that:

a. Newly installed transponders in U.S. registered civil aircraft would meet requirements of the new TSO for airborne Mode S transponder equipment.

b. Either a Mode S or ATCRBS transponder, as well as automatic pressure altitude reporting equipment would be necessary to operate in TCA's. This would be applicable to all aircraft operaing in TCA's.

c. Either an operable Mode S or ATCRBS transponder as well as automatic pressure reporting equipment would be necessary above 12,500 feet MSL within the 48 contiguous States and the District of Columbia excluding airspace at and below 2,500 feet AGL. This would be applicable to all aircraft operating above 12,500 feet MSL. The FAA proposes that the current exception for gliders above 12,500 feet MSL but below the floor of positive control area, be retained. The agency also proposes retention of other current provisions, i.e., for helicopters, and for ATC authorized deviations.

d. With respect to use of altitude reporting equipment, the only change from current provisions is that it be necessary for operations in Group II TCA's.

Note that currently, no Group III TCA's exist. The FAA expects that all references to them will be deleted by the time Mode S is implemented.

3. To be consistent with Part 91, amendments are also proposed to § 121.345(c), §127.123(b), and § 135.143(c).

Data Needed for Economic Evaluation

A complete evaluation of the economic implications of these proposed amendments has not been completed. It will involve a number of cost factors, including equipment costs for Mode S transponders, as well as altitude encoders. Numerous other elements, such as detailed equipment forecasts, will be required. These data are needed before the FAA can complete the economic evaluations for the proposal which are required by The Department of Transportation Regulatory Policies and Procedures (44 FR 11034, February 26, 1979) and Executive Order 12291. The FAA is gathering all relevant data and particularly requires manufacturer and repair station information concerning equipment and repair information.

Under this proposal, certain costs will result because users desiring to operate in specified airspace may need to install a Mode S transponder and an altitude encoder The FAA has a considerable amount of data on Mode S transponder equipment costs. The FAA believes that life-cycle cost in 1980 dollars for such a system will be $1,577 for new aircraft and $1,646 for retrofitted aircraft. This is equivalent to $1,735 for new aircraft and $1,811 for retrofitted aircraft in 1981 dollars. This cost assumes a design incorporating a tube-type transmitter; if a solid-state transmitter is incorporated in the design, the cost could be up to $400 higher.

This basic cost estimate is from an FAA Report, Report # FAA-RD-81-61, *Cost Analysis of the Descrete Address Beacon System for the Low-Performance General Aviation Aircraft Community*, September 1981. (Mode S evolved from the Discrete Address Beacon System.) It assumes development of a Mode S transponder with large-scale intergrated circuitry and expanded data handling capability.

The basic 1980 cost for the transponder was estimated to be $1,413, with a dealer discount to $1,142 (19 percent discount), installation costs of $195 for new aircraft and $264 for retrofitted aircraft, and an annual recurring cost of $16. The life-cycle cost assumes a 15-year life. The first year of ownership is estimated to cost $1,353 to $1,422 for new and retrofitted aircraft, respectively. Any comments on these cost estimates should indicate alternative estimates of equipment costs and the rationale used in developing them. The FAA realizes that the costs in the study cited may be understated due to the fact that they do not include an amount for development and start-up costs. Any responses which question cost estimates should identify specific alternative costs to the extent possible.

In addition to estimates of equipment costs, the FAA particularly needs any studies or data relevant to answering the following questions:

1. What is the expected useful life of current ATCRBS transponders?

2. What is the age distribution of transponders by type in the present fleet?

3. What has been the production history of transponders by type in the last 15 years?

4. What is the average annual maintenance expense for current transponder equipment by type of differing ages—1–5 years, 6–10 years, 11–15 years, 16+ years? What might the maintenance expense be for Mode S?

5. What types of major repairs can be anticipated for an ATCRBS transponder, and what is the probability of incurring such a repair?

The FAA's evaluation of this proposal will consider benefits in a number of areas, both those which are directly related to the Mode S transponder and some which are indirect. The FAA solicits comments from any party on benefits. One example of an indirect benefit is in the area of data-link services which the Mode S transponder can provide using the address-specific data link capability for handling of messages. In addition, the Mode S transponder is an integral part of TCAS and allows a cross link for full implementation of TCAS. Comments from any party on these other potential benefits, quantified to the extent possible will be helpful.

The FAA also solicits comments on the cost assumptions, particularly as related to the cost to the individual general aviation user affected by the proposed regulation. Comments should be specific.

List of Subjects

14 CFR Part 43

Air transportation, Aircraft, Aviation safety, Safety.

14 CFR Part 91

Aviation safety, Safety, Aircraft, Air traffic control, Pilots, Airspace, Air transportation, Airports.

14 CFR Part 121

Aviation safety, Safety, Air traffic control, Air transportation, Aircraft, Airplanes, Airports, Airspace, Transportation.

14 CFR Part 127

Aircraft, Airworthiness, Air traffic control, Helicopters, Airspace.

14 CFR Part 135

Aviation safety, Safety, Air transportation, Airworthiness, Aircraft, Transportation, Helicopters, Air traffic control, Airspace, Airplanes.

(Secs. 307, 312, 313, and 601 of the Federal Aviation Act of 1958, as amended (49 U.S.C. 1348, 1353, 1354, and 1421); 49 U.S.C. 106(g) (Revised, Pub. L. 97-449, January 12, 1983))

The FAA has determined that this proposal is considered non-significant under DOT Regulatory Policies and Procedures (44 FR 11034; Feburary 26, 1979). A full regulatory evaluation will be prepared with the assistance of comments received as a result of this advance notice, if necessary, in conjunction with any notice of proposed rulemaking that may be issued on this subject.

Issued in Washington, D.C., on September 28, 1983.

J. Lynn Helms,

Administrator.

[FR Doc. 83-28101 Filed 10-17-83; 8:45 am]

BILLING CODE 4910-13-M

federal register

Tuesday
October 18, 1983

Part IV

Environmental Protection Agency

Standards of Performance for New Sources; Pressure Sensitive Tape and Label Surface Coating Industry

ENVIRONMENTAL PROTECTION AGENCY

40 CFR Part 60

[AD-FRL 2224-6]

Standards of Performance for New Sources; Pressure Sensitive Tape and Label Surface Coating Industry

AGENCY: Environmental Protection Agency (EPA).

ACTION: Final rule.

SUMMARY: Standards of performance for the pressure sensitive tape and label surface coating industry were proposed in the **Federal Register** on December 30, 1980 (45 FR 86278). This action promulgates a standard of performance to limit emissions of volatile organic compound (VOC) from new, modified, and reconstructed pressure sensitive tape and label coating lines. This standard implements Section 111 of the Clean Air Act and is based on the Administrator's determination that industrial paper coating facilities contribute significantly to air pollution which may reasonably be anticipated to endanger public health or welfare. Pressure sensitive tape and label manufacturing is one of the largest contributors to air pollution in the industrial paper coating category. The intended effect of the standard is to require all new, modified, and reconstructed pressure sensitive tape and label surface coating lines to use the best demonstrated system of continuous emissions reduction, considering costs, nonair quality health, and environmental and energy impacts.

EFFECTIVE DATE: October 18, 1983.

Under Section 307(b)(1) of the Clean Air Act, judicial review of this new source performance standard is available *only* by the filing of a petition for review in the U.S. Court of Appeals for the District of Columbia Circuit within 60 days of today's publication of this rule. Under Section 307(b)(2) of the Clean Air Act, the requirements that are the subject of today's notice may not be challenged later in civil or criminal proceedings brought by EPA to enforce these requirements.

ADDRESS: Background Information Document. The background information document (BID) for the promulgated standard may be obtained from the U.S. EPA Library (MD-35). Research Triangle Park, North Carolina 27711, telephone number (919) 541-2777. Please refer to "Pressure Sensitive Tape and Label Surface Coating Industry—Background Information for Promulgated Standards" (EPA 450/3-80-003b). The BID contains: (1) A summary of all of the public comments made on the proposed standards and the Administrator's response to the comments; and (2) a summary of the changes made to the regulation since proposal. The final environmental impact statement which summarizes the impacts of the standard is included in "Pressure Sensitive Tape and Label Surface Coating Industry—Background Information for Promulgated Standards" (EPA 450/3-80-003b). The environmental impacts have not changed since proposal.

Docket. Docket number A-79-38, containing information considered by EPA in the development of the promulgated standard, is available for public inspection between 8:00 a.m. and 4:00 p.m., Monday through Friday, at EPA's Central Docket Section (A-130), West Tower Lobby, Gallery 1, 401 M Street, SW, Washington, D.C. 20460. A reasonable fee may be charged for copying.

FOR FURTHER INFORMATION CONTACT: Mr. Fred Porter, Section Chief, Standards Development Branch, Emissions Standard and Engineering Division (MD-13), U.S. Environmental Protection Agency, Research Triangle Park, North Carolina 27711, telephone (919) 541-5578.

SUPPLEMENTARY INFORMATION: OMB Control Number: 2060-0004.

The Standards

Standards of performance for new sources established under Section 111 of the Clean Air Act reflect:

* * * application of the best technological system of continuous emissions reduction which (taking into consideration the cost of achieving such emissions reduction, and any nonair quality health and environmental impact and energy requirements) the Administrator determines has been adequately demonstrated [Section 111(a)(1)].

For convenience, this will be referred to as "best demonstrated technology" or BDT.

The promulgated standard applies to each new, modified, and reconstructed pressure sensitive tape and label coating line for which construction is commenced after December 30, 1980. A coating line consists of any number or combination of adhesive, release, or precoat coating applicators, flashoff areas, and drying ovens which coat a continuous web, located between a web unwind station and a web rewind station, to produce pressure sensitive tapes and labels. Each coating line constitutes the affected facility for the purposes of this standard.

Under the standard, emissions from an affected facility would be limited to 0.20 kilograms of volatile organic compounds (VOC) per kilogram of coating solids applied to the substrate material, as measured by EPA Reference Methods 24 and 25 [promulgated in the **Federal Register** on October 3, 1980 (45 FR 65956)]. As an alternative, the owner or operator of the affected facility may demonstrate either a 90 percent overall VOC emissions reduction or an overall emissions reduction which is equivalent to the 0.20 kilograms per kilogram of coating solids applied level, whichever is less stringent. This overall emissions reduction is based on the amount of solvent applied with the coating solids.

In establishing the standard, EPA accounted for emissions from startups and shutdowns, which are normal occurrences and hence representative conditions for this source category. As a result, all data obtained during the performance test is to be used in calculating removal efficiency, except for data obtained during malfunction of a control device. In this instance only, data may be discarded provided the source demonstrates that a malfunction occurred and also demonstrates that any discarded data is clearly attributable to the malfunction. Compliance will then be determined on all remaining data.

Compliance with the standard can be determined over a calendar month averaging period by Reference Method 24 or by manufacturer's data. For coating lines which are controlled by incineration systems, Reference Method 25 or an approved alternative method will be used for performance testing.

Coating lines which input to the coating process 45 Mg (50 tons) of VOC or less per 12 month period are not subject to the emission limits of the proposed standard, but are subject to the recordkeeping requirements of the standard. If the 12 month limit stated above is exceeded, the affected facility becomes subject to the emission limits and all other requirements of the standard.

Compliance with the standard may be achieved through either the addition of control equipment to the facility, such as carbon absorption or thermal incineration, or through the use of low-solvent coatings in the production process. Certain coatings currently in use in the pressure sensitive tape and label surface coating industry, including hot melt and waterborne adhesive coatings, as well as 100 percent solid and waterborne release coatings would comply with the standard without the addition of control equipment because

they contain less than 0.20 kilograms of solvent per kilogram of coating solids applied.

The standard requires the owners or operators of pressure sensitive tape and label coating facilities to submit semiannual reports of instances in which the temperature fluctuations of an incinerator control device and the VOC emissions from an affected facility exceed the allowable levels established in the standard. This requirement may be waived in States where the program has been delegated, if EPA, in the course of delegation, approves reporting requirements or an alternative means of source surveillance adopted by the State. Such sources are required to comply with the requirements adopted by the State.

Information collection requirements contained in this regulation (Section 60.447) have been approved by the Office of Management and Budget (OMB) under the provisions of the Paperwork Reduction Act of 1980 U.S.C. 3501 *et seq.* and have been assigned OMB control number 2060-0004.

Summary of Environmental, Energy and Economic Impacts

In determining the environmental impacts which will result from the new source performance standard for the pressure sensitive tape and label surface coating industry, EPA established as a baseline for analytical purposes the level of emissions reduction identified in the control techniques guideline (CTG) document for this industry entitled "Control of Volatile Organic Emissions from Existing Stationary Sources—Volume II: Surface Coating of Cans, Coil, Paper, Fabrics, Automobiles, and Light-Duty Trucks" [EPA 420/2-77-008(CTG)]. Although States are not required to adopt the emission limits and control techniques recommended in this document, they are the limits and techniques most likely to be instituted in the State implementation plans (SIP's).

Compared to this baseline, the national emissions of VOC from the pressure sensitive tape and label surface coating industry would be further reduced by 16 percent in 1985. Annual emissions of VOC from affected facilities would be reduced by 9,500 megagrams (10,600 tons) in 1985.

Other environmental impacts of the application of the standard to the pressure sensitive tape and label surface coating industry would be reasonable in light of the gains in emissions reduction being achieved through the standard. National wastewater discharges from the industry would increase by 13 percent over the discharges occurring under baseline controls resulting in an annual increase in discharges of about 2.5 million liters (661,000 gallons) in 1985. The generation of solid waste from an affected facility would be increased slightly in relation to the present generation of large quantities of flawed product and discarded packing materials and spools which are disposed of as solid waste. The only addition to this material from an affected facility is spent activated carbon from carbon adsorption units. Under this standard, the maximum increase in solid waste generated by affected facilities on a nationwide basis is expected to be 55 megagrams (60 tons) per year in 1985.

The national energy impact of the standard is dependent upon which of three control scenarios are followed by the industry in complying with this standard. The use of low-solvent coatings for VOC emissions control would result in no energy impact from this standard, since this method would involve no additional control technology or loss of solvent. However, since EPA is unable to predict the extent to which this technology will be employed by the industry, this analysis focused on the two other technological controls capable of meeting the standard—carbon adsorption and incineration. Based on an analysis of the industry during the development of the standard, the majority of plants using VOC emission control devices used carbon adsorption instead of incineration. It has been estimated that 80 percent of the control systems to be installed by 1985 will be carbon adsorption. The energy impacts associated with this standard will be more closely approximated by the figures given for carbon adsorption controls.

The substantial use of carbon adsorption controls would result in a net energy savings because usable solvent would be recovered from the process. These net savings would be the equivalent of 27,100 barrels (4.3 million liters) of crude oil per year in 1985 if all affected facilities used carbon adsorption. The use of incineration controls by some facilities (approximately 20 percent) will reduce the potential energy savings achievable below the 27,100 barrel figure since this technique recovers no solvent. However, the efficient use of heat recovery by incinerator users will enable an overall net energy savings to be maintained.

The situation of all or the majority of affected facilities using incineration to control VOC emissions is not expected. If incineration did become the predominant control technique a potential energy demand of 31,000 barrels (9.9 million liters) of crude oil could result. However, for practicality and energy efficiency incinerator users would perform some degree of heat energy recovery such that the energy demand would realistically be much less than 31,000 barrel figure. The use of primary and secondary heat recovery by a large number of facilities could even result in a net energy savings. Under both the probable and worst case situations the energy impacts of the standard are reasonable.

EPA has analyzed the effect of the standard on a wide range of model facilities of varying sizes and production capacities. Both the capital and annualized costs of compliance were found to be reasonable except for coating lines which input to the coating process 45 Mg (50 tons) or less per 12 month period. The 45 Mg (50 tons) per 12 month period or less lines have been exempted from compliance with the emission limits of the standard.

Incremental compliance costs are those incurred by a plant above what is normally required of the facility under a typical SIP regulation. For example, a typical affected facility with a 1.5 meter (60 inch) wide coating line would be projected to incur approximately $300,000 in incremental capital expenditures for control equipment. Incremental annualized costs in 1985 for emissions control would be $43,000 for carbon adsorption, while incineration would result in a cost savings of about $8,000. These costs were calculated assuming a 50 percent credit value for usable solvent or heat recovery.

The incremental cumulative capital cost of compliance to the tape and label industry in 1985 would be $12.5 million. The annualized cost of compliance to the industry in 1985, including capital costs (interest and depreciation), would be $1.7 million over the baseline costs. This annualized cost was also determined assuming a 50 percent credit value for solvent/heat recovery.

Further economic impact of the standard on the pressure sensitive tape and label surface coating industry is expected to be minimal. A product price increase of 0.9 percent would be expected in order to allow the industry to recover the cost of compliance with the standard and the installation of control equipment. The effects of this standard on growth in the industry, and industry structure and profitability would not cause significant inflationary impacts or market withdrawals.

The environmental, energy, and economic impacts are discussed in greater detail in the background information document for the promulgated standards, "Pressure Sensitive Tape and Label Surface

Coating Industry—Background Information for Promulgated Standards" (EPA 450/3-80-003b).

Standards of performance have other benefits in addition to achieving reductions in emissions beyond those required by a typical SIP. They establish a degree of national uniformity, which precludes situations in which some States may attract new industries as a result of having relaxed air pollution standards relative to other States. Further, standards of performance provide documentation which reduces uncertainty in case-by-case determinations of best available control technology (BACT) for facilities located in attainment areas, and lowest achievable emission rates (LAER) for facilities located in nonattainment areas. This documentation includes identification and comprehensive analysis of alternative emission control technologies, development of associated costs, an evaluation and verification of applicable emission test methods, and identification of specific emission limits achievable with alternative technologies. The costs are provided for an economic analysis that reveals the affordability of controls in an unbiased study of the economic impact of controls on an industry.

Public Participation

Prior to proposal of the standards, interested parties were advised by public notice in the **Federal Register** on November 14, 1979 (44 FR 65670) of a meeting of the National Air Pollution Control Techniques Advisory Committee to discuss the new source performance standard for the pressure sensitive tape and label surface coating industry recommended for proposal. This meeting was held on December 13, 1979. The meeting was open to the public and each attendee was given the opportunity to comment on the standards recommended for proposal. The standards were proposed and published in the **Federal Register** on December 30, 1980 (45 FR 86278). The preamble to the proposed standards discussed the availability of the background information document (BID) "Pressure Sensitive Tape and Label Surface Coating Industry—Background Information for Proposed Standards" (EPA-450/3-80-003a), which described in detail the regulatory alternative considered and the impacts of those alternatives. Public comments were solicited at the time of proposal and, when requested, copies of the BID were distributed to interested parties. To provide interested persons the opportunity for oral presentation of data, views, or arguments concerning the proposed standards, a public hearing was held on January 30, 1981 at Research Triangle Park, North Carolina. The hearing was open to the public and each attendee was given an opportunity to comment on the proposed standards. The public comment period was from December 30, 1980 to March 2, 1981.

Fourteen comment letters were received and two interested parties testified at the public hearing concerning issues relative to the proposed standards of performance for the pressure sensitive tape and label surface coating industry. The comments have been carefully considered and, where determined to be appropriate by the Administrator, changes have been made in the proposed standard.

Significant Comments and Changes to the Proposed Standards

Comments on the proposed standards were received from industry, two members of Congress, one State pollution control agency, and one trade association. A detailed discussion of these comments and responses can be found in the background information document (BID) which is referred to in the **ADDRESS** section of this preamble. The summary of comments and responses in the BID serve as the basis for the revisions which have been made to the standards between proposal and promulgation. The major comments and responses are summarized in this preamble. Most of the comment letters contained multiple comments. The comments have been divided into the following areas: General, Emission Control Technology, Modification and Reconstruction, Economic Impact, Affected Facility Definition, Reporting and Recordkeeping, Small Source Exemption, Level of the Proposed Standard, and NSPS and State Implementation Plan (SIP) Coordination.

General

One commenter pointed out that the discussion of solventless technologies in the BID did not reflect the latest improvements in such technologies which, although not in common use in the United States, are being used in Europe. The technological variations discussed by this commenter were considered in the development of the BID and this standard, but were determined not to add significantly to the standard. Upon further consideration, the technological configuration discussed by this commenter might offer advantages to the industry in reducing VOC emissions, and the promulgation and operation of the standard will not adversely affect the use of such technology.

Another commenter discussed the application of the standard to radiation-cured coatings, asking that they either be exempted from the standard or that analytical methods be revised to accommodate the characteristics of this process. It was determined that radiation-cure coating processes do not involve coatings containing VOCs, and therefore the processes would fall below the standard of 0.20 kilograms of VOC per kilogram of coating solids without requiring further controls.

Another commenter objected to the inclusion of water in water-based coatings as a part of the emissions to be measured in determining whether the facility is subject to the standard. This is an apparent misunderstanding of the provisions of the standard. The standard does not include water in the calculation of VOC emissions.

Another commenter objected to certain commenter objected to certain conclusions stated in the background information document concerning the level of inlet VOC concentration required to operate an incinerator for the control of VOC emissions without the necessity of adding supplementary fuel to the incinerator. This objection was based on the results of tests performed on the commenter's own incinerator in 1972 which varied from the results reported in EPA's analysis. The level reported in the BID is based on a model incinerator designed to represent the typical incinerator used for VOC control in the PSTL industry and is intended to indicate the trends in incinerator performance as various loadings of solvent are added to the incinerator. Therefore, variance between the results reported for this representative model incinerator study and for other tests on individual incinerators is to be expected (see Section 2.1.4 of the BID for further discussion).

Several commenters in this section stated that no standard is necessary since there is already adequate economic incentive for the users of coatings containing VOC to recover the maximum amount of solvent possible for reuse. Although the Administrator viewed these economic incentives as important to the overall operation and success of the standard, an examination of the industry indicates that economic incentives alone are not sufficient to ensure that the pressure sensitive tape and label surface coating industry will use the best demonstrated technology for the control of VOC emissions. Indeed, during the examination of these facilities leading to the development of this standard, it was noted that in spite of these incentives, some facilities did

not recover any solvent from their coating operations.

Emission Control Technology

One commenter stated that the use of hooding to capture fugitive VOC emissions from coating heads has not been demonstrated except on a theoretical basis. During the development of this standard, EPA examined a facility which employed hooding to capture fugitive emissions. Based on tests performed at this facility and observation of other facilities employing hooding for the capture of fugitive emissions, the Administrator has determined that hooding is an effective device for capturing these emissions and that compliance with the standard can be achieved employing this technology and add-on control devices.

Modification and Reconstruction

Several comments were received concerning the application of the modification and reconstruction provisions of the General Provisions of 40 CFR Part 60 to this standard for the pressure sensitive tape and label surface coating industry. One stated that these provisions were vague and subject to misinterpretation. Experience with these provisions and examination of their applicability to this industry indicates that problems with interpreting when a facility has been modified or reconstructed and thereby made subject to the standard should be minimal. The modification provisions establish a fairly straightforward rule that when an alteration to a facility results in an increase in emissions the facility is then subject to the standard, unless the alteration falls within certain specifically listed exemptions. The reconstruction provision involves a plant specific review by the Agency to determine whether a major expenditure at a facility should include the provisions of the control technology required for compliance with the standard. Although the operation of this provision involves the application of judgment to the circumstances of the alteration, it also provides for the inclusion of a greater variety of factors, such as the economic impact of the standard, in determining whether the facility will be subject to the standard.

Two comments were received concerning the applicability of the modification and reconstruction provisions to specific alterations to a facility. The first comment questioned whether normal repairs to a facility constitutes a modification. The applicable sections of the modification provisions state that normal repairs to a facility do not constitute modifications which would render a facility subject to the standard. The second comment concerned the application of the standard to a facility which converts to solventless or low-solvent coatings. This case would not constitute a modification of the facility, since there would be no increase in emissions from the facility. Whether such a conversion would constitute a reconstruction would involve a calculation of whether the cost of the conversion was greater than 50 percent of the cost of an entirely new plant, and then involve an additional review of the circumstances of the conversion by the Administrator before the applicability of the standard to the facility could be determined.

A final commenter stated generally that the standard should not be made applicable to a facility which undergoes updating and modification because this will result in outdated and less efficient plants being left in operation for a longer period of time. While it is true that the effect of the standard will enter into decisions concerning the updating of plants, the savings in energy and efficiency resulting from improvements to the facility are expected to be overriding considerations in this decision. Therefore, the application of the standard to pressure sensitive tape and label surface coating facilities which undergo extensive alteration is consistent with the scheme of the Clean Air Act.

Economic Impact

One commenter on the economic analysis performed in the development of the standard objected that the cost figures reported in the BID (Volume I) were not consistent with current values. The values listed in the BID, and the basis of the analysis performed there, were based on 1979 figures. Although these figures may change in time, they remain consistent in relation to each other and do not change the validity of the conclusions reached in the analysis concerning the reasonableness of the standard. If converted into current cost figures and reanalyzed, the relations of cost to the achievements of the standard would remain the same. Therefore, it is the relationship between the figures, and not their absolute accuracy for all points in time, that is crucial to the analysis of the economic impact of the standard.

Another commenter stated that the added costs of pollution control required by the standard would be passed on to consumers, resulting in an inflationary impact on the economy. EPA's analysis, however, shows that even with full pass-through of the costs to the consumer the maximum product price increase would be 0.9 percent. This mimimal cost increase is considered by the Administrator to be reasonable and noninflationary.

In several comments, objections were made to the standard on the basis of the minimal reduction in emissions which would be achieved under the standard as compared to existing State regulations as compared to the greatly increased cost of compliance with the standard. These reductions and costs were analyzed by the EPA in the BID. It was determined that by 1985 emissions from pressure sensitive tape and label surface coating facilities would be reduced by 16 percent per year as compared to the controls required by existing regulations. The increase in product price necessitated by this 16 percent reduction in emissions would be less than 1 percent. Therefore, the additional emissions reduction seems well justified in terms of the costs required for achieving them.

The effect of the standard on the conversion of the industry to solventless and low-solvent technologies was also the subject of one comment. This commenter was concerned that the costs of complying with the standard would cause owners of facilities to forego conversion. However, low-solvent and solventless technologies are treated essentially equally under the standard and under existing regulations, since they typically are able to comply with the standard without the necessity of further add-on controls. In addition, it is believed that economic factors outside of the operation of this standard, such as the cost and availability of solvents, will provide additional incentive for the conversions of coating lines to low-solvent and solventless costing technologies.

Four commenters stated that the economic analysis performed by EPA was insufficient, particularly with relation to small facilities. Chapter 8 of the BID contains this ecomonic analysis, which is directed specifically to small facilities as well as large and medium facilities. Model coating lines of all three sizes and various technological characteristics were analyzed and the impact of the standard on each determined in the development of the standard. This analysis is necessarily representative rather than exhaustive of each facility in the industry, but does accurately reflect the standard and its impact on the industry.

A final commenter in this segment stated that the standard should only be applied on a case-by-case basis after analyzing the costs and benefits of the additional control to each individual

plant. Section 111 of the Clean Air Act does not provide for case-by-case application of a standard but instead requires that the standard be applied to the entire source category or to distinguishable subgroups within that category. In addition, it is not expected that the impact of this standard on any individual plant will vary from the models used in the development of the standard to the extent that the impact of the standard would be unreasonable.

Affected Facility Definition

The Administrator has determined that the definition of affected facility proposed for inclusion in the standard should be changed in response to comments made on this issue by several commenters and upon further consideration by the Agency.

As explained in the preamble to the proposed standard, EPA adopts that definition of affected facility which produces the greatest emission reduction without imposing unreasonable costs or other impacts. The original definition proposed for this industry provided that each separate coating head and drying oven combination along a coating line would constitute an affected facility for the purpose of this standard. Thus, there would be more than one affected facility associated with each coating line, each of which would be required to comply with the standard. Several commenters urged the Agency to amend this definition to make the affected facility, for the purposes of this standard, the entire coating line, including all individual coating heads and drying ovens. Under this definition, the combination of sources along a coating line would be required to comply with the standard, rather than each individual source.

In urging this change, the commenters made several points. First, they argued that the coating line is the basic production unit for the industry and marks the most logical unit for control in terms of the configuration of the production processes and plants. In support, they pointed out that the various State implementation plans (SIP's) under which they operate consider the coating line to be the basic unit for control, not each coating head and oven combination. Secondly, they argued that this broader definition would allow the operators of facilities to control their emissions in the most cost effective manner. By grouping these emission sources together under one overall requirement, the owner or operator of the facility may control these sources where the greatest reduction may be achieved at the lowest cost and minimize expenditures for emissions control where the benefits in reductions would be small. Finally, they pointed out that the broader definition covering the entire coating line would promote the development and use of low-solvent and solventless technologies as emissions control techniques, resulting in an overall betterment in air quality beyond that achievable by the standard and technological requirements alone. In support of this position, new data were submitted by the industry showing that the relative costs of low-solvent compared to solvent-based adhesive coating technology have changed since EPA's BID was prepared. These data show that low-solvent technology is more limited in application than the EPA and industry had previously anticipated and that the cost is higher than the current cost of comparable solvent-based systems.

After reviewing these comments and the two definitions, the Administrator determined that in light of the similar degree of overall emissions reduction achievable under either definition, the greater flexibility in allocating control costs available under the broadened definition, and the physical compatibility of the broadened definition with the characteristics of the pressure sensitive tape and label surface costing production line, the affected facility definition should be amended to provide for the inclusion of the entire coating line. The Administrator believes that the broad definition will encourage the use of low-solvent and solventless adhesive coatings, and achieve an equal or greater emission reduction than the narrow definition. When the standard is reviewed in four years as required under Section 111(b) of the Act, the low-solvent and solventless adhesive technology will be closely evaluated.

Reporting and Recordkeeping

Several commenters objected to the reporting and recordkeeping requirements of the standard, stating that these requirements are costly and burdensome. They further contended that these requirements would hinder the development and adoption of innovative coating technologies by the industry by requiring facilities to keep records and make reports even though the characteristics of their coatings bring them within the limits set by the standard without technological controls.

The Administrator has reviewed the recordkeeping and reporting requirements of the proposed standard, and determined that those requirements calling for reports to be submitted to the Agency should be modified in the promulgated standard. Reporting requirements in the promulgated standard have been reduced to only requiring semiannual reports of instances when the temperature fluctuations of an incinerator control device and the VOC emissions from an affected facility exceed the allowable levels established in the standard. In the proposed standard such reports were required on a calendar month basis. The other reporting requirement in the proposed standard for the submittal of initial (and any subsequent) performance test results to the Administrator remains unchanged in the promulgated standard.

The compiling and keeping of records of the performance of the control equipment installed in compliance with this standard is necessary, both to the Agency in determining compliance and to the company operating the facility to determine whether the control equipment is functioning adequately. The recordkeeping requirements therefore have not been changed since proposal. In order to determine compliance with the standard, the Agency may inspect the records kept by a facility at any time.

Small Solvent Use Exemption

One commenter urged the Agency to include an exemption for small sources in the standard, raising the minimum levels of emissions for inclusion under the regulation from 15 megagrams per year to an unspecified higher level. The reasons stated by this commenter in support of the change were that small sources comprise a minor part of the total VOC emissions for the entire industry, that the cost of emissions control for small sources is unreasonable for the benefits in emissions reduction achieved, and that a small source exemption would encourage the development of low-solvent and solventless coatings. In analyzing this issue, the Administrator has determined that a broadened small source exemption is not warranted on the bases of contributing a minor part to total industry emissions or the failure of the standard to encourage the development of low-solvent or solventless coatings. Section 111 requires new source performance standards to reflect the best demonstrated technology. It does not provide a basis for exempting subcategories of sources (for which control technology is technically and economically available) from any standard merely because their emissions are less than the emissions of other subcategories. Further, it has been

determined by the Administrator that this standard will not impede the conversion to and development of solventless and low-solvent technologies.

However, the Agency has reanalyzed the cost effectiveness (i.e., the cost of VOC emissions control relative to the emission reduction which is achieved by such controls) over the range of line sizes found in this industry. For each type of line, annualized control costs were calculated and compared to the emission reductions which would occur if potential, uncontrolled emissions are reduced to the level of the standard. This analysis showed that the cost effectiveness of controls is primarily a function of the quantity of solvent used, and that the parameters are inversely related. That is, as solvent use (and therefore potential emissions) increases, the cost effectiveness decreases. It should be noted that this cost curve does not necessarily represent the actual amounts of money that will be spent to install and operate VOC controls for any particular coating line. Rather, the costs are estimates which are representative of facilities likely to be built. The costs for a VOC control system will vary according to coating line size, system airflow rate, solvent loading level, the lower explosive limit levels maintained in the oven, the degree of solvent or heat recovery practiced, and other factors. However, the cost curve provides a useful guide for judging the reasonableness of requiring VOC controls at different potential VOC emission levels.

In the past, the maximum estimated cost per megagram of pollutant material removed (VOC, particulate matter, SO_2) has ranged from somewhat less than $1,000 to $2,000. This package has a maximum estimated cost per megagram of $2,000. In prior source categories for which NSPS have been developed, VOC maximum estimated control costs have generally not exceeded $1,000 per megagram. In this case, because of the "worst case" character of the cost calculations, EPA believes the proposed standards are reasonable.

The maximum estimated cost in this package will not be viewed as a precedent for future actions. Instead, in the future, we will continue to evaluate each package on an individual basis.

The cost curve for the application of VOC controls to coating lines shows that the potential cost per Mg of VOC controlled is greater than $2,000 for input solvent levels of about 45 Mg (50 tons) per year or less. Therefore, in the promulgated standard, coating lines which input to the coating process 45 Mg (50 tons) per 12 month period or less of VOC will not be subject to the standard's emission limits. These lines will, however, be subject to all applicable recordkeeping and reporting requirements given in the standard.

The Agency realizes that this exemption could inadvertently create an incentive for the construction of smaller lines in order to avoid the need for VOC emissions control. The Agency does not believe, however, that this incentive is sufficient to markedly alter the construction pattern of new PSTL lines such that national VOC emissions would be greatly increased. However, this standard will be reviewed four years from now, and the effect of the small solvent use exemption on the size of new facilities will specifically be examined.

Level of Proposed Standard

One commenter stated that the 90 percent reduction level in the standard seemed to be arbitrary. On the contrary, the 90 percent reduction level was developed through extensive study and analysis of the pressure sensitive tape and label surface coating industry, the available emissions control equipment, and the environmental, energy and economic impacts of various control levels. It was determined that the best demonstrated control technology could continually achieve a 90 percent reduction in emissions over a long term period of operation. The analyses of the technological systems of emissions control are contained in Chapter 4 of the BID—Volume I, and the energy, environmental, and economic impacts of these technologies are discussed in Chapters 7 and 8 of the BID— Volume I.

Another commenter stated that a turndown ratio of 10 to 1 could not be achieved in drying oven exhausts, as stated in the BID. (Turndown ratio refers to the degree by which oven exhaust air can be reduced from the level for which the oven is designed in response to reduced solvent loadings.) In its examination of this issue, the Agency has determined that the technical points made by this commenter are generally valid (particularly for his own plant, on which his comments were based), but that new facilities are still capable of achieving compliance with the standard on a consistent basis even with a lower turndown ratio, such as the four to one ratio cited by the commenter. This determination is based on the experience of other facilities examined by the Agency during the course of the development of this standard which were able to meet the reduction level required by the standard even at the lower turndown ratios. This analysis is presented in detail in Volume I of the BID.

A third commenter on the issue of the level of the standard stated that the mass emission limit should be 0.25 kilograms of VOC per kilogram of coating solids, rather than 0.20 kilograms, in order to allow a wider range of low-solvent coatings to be used without requiring the use of additional control technology in order to comply with the standard. The EPA examined a number of solventless and low-solvent coatings during the preparation of this standard. It was determined that a 0.20 kilogram emission limit could be attained using the best technological system of emissions reduction (consistent with energy, environmental, and economic considerations). No comments were received which presented argument or data contradicting this determination. Although there will be some new coatings which cannot be used without further controls in compliance with the standard, these coatings may still be useful in combination with other coatings in achieving the emissions reduction required. If used with other low-solvent coatings on a line, coatings capable of achieving 0.25 kilograms of VOC per kilogram of coating solid could help keep the monthly compliance average below 0.20 kilograms. If used with conventional solvent based coatings, these coatings would reduce the level of control necessary to achieve compliance with the standard.

NSPS and SIP Coordination

Two commenters suggested that the implementation of the standard be postponed for a 5 to 10 year period in order to assess the impact on air quality of the newest limits recommended for State implementation plans (SIP's) of 2.9 pounds of VOC per gallon of applied coating. During the development of the standard, this SIP requirement was examined and its impact on national VOC emissions projected. Further, this SIP requirement formed the baseline against which each of the regulatory alternatives has been evaluated. Therefore, no further delay in the promulgation of this standard is required in order to determine the impact of the SIP provisions since these impacts have been projected and formed a major consideration in the development of the standard.

The last two commenters in this section pointed out that the units of measurement in the standard (kg VOC/kg coating solids) are different from these used in many of the SIP's (pounds/gallon of coating minus water), and that

this difference would be confusing to owners and operator of facilities which must attempt to comply with both the new source standard and a SIP. The unit of measurement used in this standard was developed through consultation with industry representatives who pointed out that companies have experienced difficulties in interpreting and implementing the mass per volume measurement used in the SIP's. The mass measurement used in this standard was found to be simpler to understand and to calculate from typical coating formulation data. Further, there should be no confusion over compliance with different standards which may apply to a facility since compliance with the more stringent in each case also satisfies the requirements of the less stringent. In this case, compliance with the 0.20 kilograms VOC per kilogram of coating solid new source standard would also constitute compliance with a 2.9 pounds VOC per gallon requirement of a SIP.

Docket

The docket is an organized and complete file of all the information considered by EPA in the development of this rulemaking. The docket is a dynamic file, since material is added throughout the rulemaking development. The docketing system is intended to allow members of the public and industries involved to readily identify and locate documents so that they can intelligently and effectively participate in the rulemaking process. Along with the statement of basis and purpose of the proposed and promulgated standards and EPA responses to significant comments, the contents of the docket will serve as the record in case of judicial review [Section 307(d)(7)(A)].

Miscellaneous

The effective date of this regulation is October 18, 1983. Section 111 of the Clean Air Act provides that standards of performance or revisions thereof become effective upon promulgation and apply to affected facilities, construction or modification of which was commenced after the date of proposal (December 30, 1980).

As prescribed in Section 111, the promulgation of these standards was preceded by the Administrator's determination (40 CFR 60.16, 44 FR 49222, dated August 21, 1979) that these sources contribute significantly to air pollution which may reasonably be anticipated to endanger public health or welfare. In accordance with Section 117 of the Act, publication of these promulgated standards was preceded by consultation with appropriate advisory committees, independent experts, and Federal departments and agencies.

The rulemaking process that implements a performance standard assures adequate technical review and promotes participation of representatives of the industry being considered for regulation, government, and the public affected by that industry's emissions. The resultant regulation represents a balance in which government resources are applied in a well-publicized national forum to reach a decision on a pollution emission level that allows for a dynamic economy and a healthful environment.

This regulation will be reviewed 4 years from the date of promulgation as required by the Clean Air Act. This review will include an assessment of such factors as the need for integration with other programs, the existence of alternative methods, enforceability, improvements in emission control technology, and reporting requirements. The reporting requirements in this regulation will be reviewed as required under EPA's sunset policy for reporting requirements in regulations.

Section 317 of the Clean Air Act requires the Administrator to prepare an economic impact assessment for any new source standard of performace promulgated under Section 111(b) of the Act. An economic impact assessment was prepared for this regulation and for other regulatory alternatives. All aspects of the assessment were considered in the formulation of the standards to insure that cost was carefully considered in determining BDT. The economic impact assessment is included in the background information document for the proposed standards.

In addition to conducting an economic impact analysis, EPA examined the emission reduction and annualized costs, expressed in dollars per Mg (ton) of pollutant removed per year, for three alternative levels of control. The three levels of control are an overall emissions reduction of 81 percent, as specified in many existing SIP's; an overall emissions reduction of 85 percent; and an overall emissions reduction of 90 percent, as required by the NSPS. This examination showed that for a typical medium-sized pressure sensitive tape and label surface coating line an 85 percent level of control reduces emissions by 41 Mg (45 tons) per year relative to the 81 percent level (SIP level) and increases annualized costs by $145/Mg ($130/ton). It also showed that the incremental emission reduction achieved by increasing the control level from 85 to 90 percent is (38 tons) at an incremental annualized cost of $115/Mg ($105/ton). These annualized costs per ton of pollutant removed are comparable to costs and associated emissions in other industries that control VOC emissions. In addition, as described in the section "Small Solvent Use Exemption," the Agency also analyzed the overall cost effectiveness of adding controls to uncontrolled lines and on the basis of this established a low solvent use cut-off.

The Paperwork Reduction Act of 1980 (Pub. L. 96–511) requires EPA to submit to the Office of Management and Budget (OMB) certain public reporting/recordkeeping requirements. The reporting/recordkeeping requirements associated with this standard have been approved by OMB.

Under Executive Order 12291, EPA must judge whether a regulation is "major" and therefore subject to the requirement of a Regulatory Impact Analysis. This regulation is not major because it would result in none of the adverse economic effects set forth in Section 1 of the Order as grounds for finding a regulation to be major. The industry-wide annualized costs in the fifth year after the standards would go into effect would be $1.7 million, much less than the $100 million established as the first criterion for a major regulation in the Order. The estimated price increase of less than 2 percent associated with the standards would not be considered a "major increase in costs or prices" specified as the second criterion in the Order. The economic analysis of the standards' effects on the industry did not indicate any significant adverse effects on competition, investment, productivity, employment, innovation, or the ability of the U.S. firms to compete with foreign firms (the third criterion in the Order).

Information collection requirements contained in this regulation (§§ 60.443, 60.444, 60.445, and 60.447) have been approved by the Office of Management and Budget (OMB) under the provisions of the Paperwork Reduction Act of 1980, 44 U.S.C. 3501 *et seq.* and have been assigned OMB control number 2060–0004.

List of Subjects in 40 CFR Part 60

Air pollution control, Aluminum, Ammonium sulfate plants, Asphalt, Cement industry, Coal Copper, Electric power plants, Glass and glass products, Grains, Intergovernmental relations, Iron, Lead, Metals, Metallic Minerals, Motor vehicles, Nitric acid plants, Paper and paper products industry, Petroleum, Phosphate, Sewage disposal, Steel

Sulfuric acid plants, Waste treatment and disposal, Zinc, Tires, Incorporation by reference, Can surface coating, Sulfuric acid plants, Industrial organic chemicals.

Dated: October 11, 1983.

William D. Ruckelshaus,

Administrator.

PART 60—[AMENDED]

40 CFR Part 60 is amended by adding a new Subpart RR as follows:

Subpart RR—Standards of Performance for Pressure Sensitive Tape and Label Surface Coating Operations

Sec.
60.440 Applicability and designation of affected facility.
60.441 Definitions and symbols.
60.442 Standard for volatile organic compounds.
60.443 Compliance provisions.
60.444 Performance test procedures.
60.445 Monitoring of operations and recordkeeping.
60.446 Test methods and procedures.
60.447 Reporting requirements.

Authority: Sec. 111, 301(a), Clean Air Act as amended (42 U.S.C. 7411, 7601(a)), and additional authority as noted below.

Subpart RR—Standards of Performance for Pressure Sensitive Tape and Label Surface Coating Operations

§ 60.440 Applicability and designation of affected facility.

(a) The affected facility to which the provisions of this subpart apply is each coating line used in the manufacture of pressure sensitive tape and label materials.

(b) Any affected facility which inputs to the coating process 45 Mg of VOC or less per 12 month period is not subject to the emission limits of § 60.442(a), however, the affected facility is subject to the requirements of all other applicable sections of this subpart. If the amount of VOC input exceeds 45 Mg per 12 month period, the coating line will become subject to § 60.442(a) and all other sections of this subpart.

(c) This subpart applies to any affected facility which begins construction, modification, or reconstruction after December 30, 1980.

§ 60.441 Definitions and symbols.

(a) Except as otherwise required by the context, terms used in this subpart are defined in the Act, in Subpart A of this part, or in this section as follows:

"Coating applicator" means an apparatus used to apply a surface coating to a continuous web.

"Coating line" means any number or combination of adhesive, release, or precoat coating applicators, flashoff areas, and ovens which coat a continuous web, located between a web unwind station and a web rewind station, to produce pressure sensitive tape and label materials.

"Coating solids applied" means the solids content of the coated adhesive, release, or precoat as measured by Reference Method 24.

"Flashoff area" means the portion of a coating line after the coating applicator and usually before the oven entrance.

"Fugitive volatile organic compounds" means any volatile organic compounds which are emitted from the coating applicator and flashoff areas and are not emitted in the oven.

"Hood or enclosure" means any device used to capture fugitive volatile organic compounds.

"Oven" means a chamber which uses heat or irradiation to bake, cure, polymerize, or dry a surface coating.

"Precoat" means a coating operation in which a coating other than an adhesive or release is applied to a surface during the production of a pressure sensitive tape or label product.

"Solvent applied in the coating" means all organic solvent contained in the adhesive, release, and precoat formulations that is metered into the coating applicator from the formulation area.

"Total enclosure" means a structure or building around the coating applicator and flashoff area or the entire coating line for the purpose of confining and totally capturing fugitive VOC emissions.

"VOC" means volatile organic compound.

(b) All symbols used in this subpart not defined below are given meaning in the Act or in Subpart A of this part.

"a" means the gas stream vents exiting the emission control device.

"b" means the gas stream vents entering the emission control device.

"C_{aj}" means the concentration of VOC (carbon equivalent) in each gas stream (j) exiting the emission control device, in parts per million by volume.

"C_{bi}" means the concentration of VOC (carbon equivalent) in each gas stream (i) entering the emission control device, in parts per million by volume.

"C_{fk}" means the concentration of VOC (carbon equivalent) in each gas stream (k) emitted directly to the atmosphere, in parts per million by volume.

"G" means the calculated weighted average mass (kg) of VOC per mass (kg) of coating solids applied each calender month.

"M_{ci}" means the total mass (kg) of each coating (i) applied during the calendar month as determined from facility records.

"M_r" means the total mass (kg) of solvent recovered for a calendar month.

"Q_{aj}" means the volumetric flow rate of each effluent gas stream (j) exiting the emission control device, in dry standard cubic meters per hour.

"Q_{bi}" means the volumetric flow rate of each effluent gas stream (i) entering the emission control device, in dry standard cubic meters per hour.

"Q_{fk}" means the volumetric flow rate of each effluent gas stream (k) emitted to the atmosphere, in dry standard cubic meters per hour.

"R" means the overall VOC emission reduction achieved for a calendar month (in percent).

"R_q" means the required overall VOC emission reduction (in percent).

"W_{oi}" means the weight fraction of organics applied of each coating (i) applied during a calendar month as determined from Reference Method 24 or coating manufacturer's formulation data.

"W_{si}" means the weight fraction of solids applied of each coating (i) applied during a calendar month as determined from Reference Method 24 or coating manufacturer's formulation data.

§ 60.442 Standard for volatile organic compounds.

(a) On and after the date on which the performance test required by § 60.8 has been completed each owner or operator subject to this subpart shall:

(1) Cause the discharge into the atmosphere from an affected facility not more than 0.20 kg VOC/kg of coating solids applied as calculated on a weighted average basis for one calendar month; or

(2) Demonstrate for each affected facility;

(i) a 90 percent overall VOC emission reduction as calculated over a calendar month; or

(ii) the percent overall VOC emission reduction specified in § 60.443(b) as calculated over a calendar month.

§ 60.443 Compliance provisions.

(a) To determine compliance with § 60.442 the owner or operator of the affected facility shall calculate a weighted average of the mass of solvent used per mass of coating solids applied for a one calendar month period according to the following procedures:

(1) Determine the weight fraction of organics and the weight fraction of solids of each coating applied by using Reference Method 24 or by the coating manufacturer's formulation data.

(2) Compute the weighted average by the following equation:

$$G=\frac{\sum_{i=1}^{n} W_{ai}M_{ci}}{\sum_{i=1}^{n} W_{ai}M_{ci}}$$

(3) For each affected facility where the value of G is less than or equal to 0.20 kg VOC per kg of coating solids applied, the affected facility is in compliance with § 60.442(a)(1).

(b) To determine compliance with § 60.442(a)(2), the owner or operator shall calculate the required overall VOC emission reduction according to the following equation:

$$R_q=\frac{G-0.20}{G}\times 100$$

If R_q less than or equal to 90 percent, then the required overall VOC emission reduction is R_q. If R_q is greater than 90 percent, then the required overall VOC emission reduction is 90 percent.

(c) Where compliance with the emission limits specified in § 60.442(a)(2) is achieved through the use of a solvent recovery system, the owner or operator shall determine the overall VOC emission reduction for a one calendar month period by the following equation:

$$R=\frac{M_r}{\sum_{i=1}^{n} W_{ai}M_{ci}}\times 100$$

If the R value is equal to or greater than the $R_q$value specified in paragraph (b) of this section, then compliance with § 60.442(a)(2) is demonstrated.

(d) Where compliance with the emission limit specified in §60.442(a)(2) is achieved through the use of a solvent destruction device, the owner or operator shall determine calendar monthly compliance by comparing the monthly required overall VOC emission reduction specified in paragraph (b)1 of this section to the overall VOC emission reduction demonstrated in the most recent performance test which complied with § 60.442(a)(2). If the monthly required overall VOC emission reduction is less than or equal to the overall VOC reduction of the most recent performance test, the affected facility is in compliance with § 60.442(a)(2).

(e) Where compliance with § 60.442(a)(2) is achieved through the use of a solvent destruction device, the owner or operator shall continuously record the destruction device combustion temperature during coating operations for thermal incineration destruction devices or the gas temperature upstream and downstream of the incinerator catalyst bed during coating operations for catalytic incineration destruction devices. For thermal incineration destruction devices the owner or operator shall record all 3-hour periods (during actual coating operations) during which the average temperature of the device is more than 28°C (50°F) below the average temperature of the device during the most recent performance test complying with § 60.442(a)(2). For catalytic incineration destruction devices, the owner or operator shall record all 3-hour periods (during actual coating operations) during which the average temperature of the device immediately before the catalyst bed is more than 38°C (50°F) below the average temperature of the device during the most recent performance test complying with § 60.442(a)(2), and all 3-hour periods (during actual coating operations) during which the average temperature difference across the catalyst bed is less than 80 percent of the average temperature difference of the device during the most recent performance test complying with § 60.442(a)(2).

(f) After the initial performance test required for all affected facilities under § 60.8, compliance with the VOC emission limitation and percentage reduction requirements under § 60.442 is based on the average emission reduction for one calendar month. A separate compliance test is completed at the end of each calendar month after the initial performance test, and a new calendar month's average VOC emission reduction is calculated to show compliance with the standard.

(g) If a common emission control device is used to recover or destroy solvent from more than one affected facility, the performance of that control device is assumed to be equal for each of the affected facilities. Compliance with § 60.442(a)(2) is determined by the methods specified in paragraphs (c) and (d) of this section and is performed simultaneously on all affected facilities.

(h) If a common emission control device is used to recover solvent from an existing facility (or facilities) as well as from an affected facility (or facilities), the overall VOC emission reduction for the affected facility (or facilities), for the purpose of compliance, shall be determined by the following procedures:

(1) The owner or operator of the existing facility (or facilities) shall determine the mass of solvent recovered for a calendar month period from the existing facility (or facilities) prior to the connection of the affected facility (or facilities) to the emission control device.

(2) The affected facility (or facilities) shall then be connected to the emission control device.

(3) The owner or operator shall determine the total mass of solvent recovered from both the existing and affected facilities over a calendar month period. The mass of solvent determined in paragraph (h)(1) of this section from the existing facility shall be subtracted from the total mass of recovered solvent to obtain the mass of solvent recovered from the affected facility (or facilities). The overall VOC emission reduction of the affected facility (or facilities) can then be determined as specified in paragraph (c) of this section.

(i) If a common emission control devices is used to destruct solvent from an existing facility (or facilities) as well as from an affected facility (or facilities), the overall VOC emission reduction for the affected facility (or facilities), for the purpose of compliance, shall be determined by the following procedures:

(1) The owner or operator shall operate the emission control device with both the existing and affected facilities connected.

(2) The concentration of VOC (in parts per million by volume) after the common emission control device shall be determined as specified in § 60.444(c). This concentration is used in the calculation of compliance for both the existing and affected facilities.

(3) The volumetric flow out of the common control device attributable to the affected facility (or facilities) shall be calculated by first determining the ratio of the volumetric flow entering the common control device attributable to the affected facility (facilities) to the total volumetric flow entering the common control device from both existing and affected facilities. The multiplication of this ratio by the total volumetric flow out of the common control device yields the flow attributable to the affected facility (facilities). Compliance is determined by the use of the equation specified in § 60.444(c).

(j) Startups and shutdowns are normal operation for this source category. Emissions from these operations are to be included when determining if the standard specified at § 60.442(a)(2) is being attained.

(Approved by the Office of Management and Budget under control number 2060-004)

§ 60.444 Performance test procedures.

(a) The performance test for affected facilities complying with § 60.442 without the use of add-on controls shall be identical to the procedures specified in § 60.443(a).

(b) The performance test for affected facilities controlled by a solvent recovery device shall be conducted as follows:

(1) The performance test shall be a one calendar month test and not the average of three runs as specified in § 60.8(f).

(2) The weighted average mass of VOC per mass of coating solids applied for a one calendar month period shall be determined as specified in § 60.443(a)(1) and § 60.443(a)(2).

(3) Calculate the required percent overall VOC emission reduction as specified in § 60.443(b).

(4) Inventory VOC usage and VOC recovery for a one calendar month period.

(5) Determine the percent overall VOC emission reduction as specified in § 60.443(c).

(c) The performance test for affected facilities controlled by a solvent destruction device shall be conducted as follows:

(1) The performance of the solvent destruction device shall be determined by averaging the results of three test runs as specified in § 60.8(f).

(2) Determine for each affected facility prior to each test run the weighted average mass of VOC per mass of coating solids applied being used at the facility. The weighted average shall be determined as specified in § 60.443(a). In this application the quantities of W_{oi}, W_{si}, and M_{ci} shall be determined for the time period of each test run and not a calendar month as specified in § 60.441.

(3) Calculate the required percent overall VOC emission reduction as specified in § 60.443(b).

(4) Determine the percent overall VOC emission reduction of the solvent destruction device by the following equation and procedures:

$$R = \frac{\sum_{i=1}^{n} Q_{bi}C_{bi} - \sum_{j=1}^{m} Q_{aj}C_{aj}}{\sum_{i=1}^{n} Q_{bi}C_{bi} + \sum_{k=1}^{p} Q_{fk}C_{fk}} \times 100$$

(i) The owner or operator of the affected facility shall construct the overall VOC emission reduction system so that all volumetric flow rates and total VOC emissions can be accurately determined by the applicable test methods and procedures specified in § 60.446(b).

(ii) The owner or operator of an affected facility shall construct a temporary total enclosure around the coating line applicator and flashoff area during the performance test for the purpose of capturing fugitive VOC emissions. If a permanent total enclosure exists in the affected facility prior to the performance test and the Administrator is satisfied that the enclosure is totally capturing fugitive VOC emissions, then no additional total enclosure will be required for the performance test.

(iii) For each affected facility where the value of R is greater than or equal to the value of R_q calculated in § 60.443(b), compliance with § 60.442(a)(2) is demonstrated.

(Sec. 114, Clean Air Act as amended (42 U.S.C. 7414))

(Approved by the Office of Management and Budget under control number 2060-0004)

§ 60.445 Monitoring of operations and recordkeeping.

(a) The owner or operator of an affected facility subject to this subpart shall maintain a calendar month record of all coatings used and the results of the reference test method specified in § 60.446(a) or the manufacturer's formulation data used for determining the VOC content of those coatings.

(b) The owner or operator of an affected facility controlled by a solvent recovery device shall maintain a calendar month record of the amount of solvent applied in the coating at each affected facility.

(c) The owner or operator of an affected facility controlled by a solvent recovery device shall install, calibrate, maintain, and operate a monitoring device for indicating the cumulative amount of solvent recovered by the device over a calendar month period. The monitoring device shall be accurate within ±2.0 percent. The owner or operator shall maintain a calendar month record of the amount of solvent recovered by the device.

(d) The owner or operator of an affected facility operating at the conditions specified in § 60.440(b) shall maintain a 12 month record of the amount of solvent applied in the coating at the facility.

(e) The owner or operator of an affected facility controlled by a thermal incineration solvent destruction device shall install, calibrate, maintain, and operate a monitoring device which continuously indicates and records the temperature of the solvent destruction device's exhaust gases. The monitoring device shall have an accuracy of the greater of ±0.75 percent of the temperature being measured expressed in degrees Celsius or ±2.5° C.

(f) The owner or operator of an affected facility controlled by a catalytic incineration solvent destruction device shall install, calibrate, maintain, and operate a monitoring device which continuously indicates and records the gas temperature both upstream and downstream of the catalyst bed.

(g) The owner or operator of an affected facility controlled by a solvent destruction device which uses a hood or enclosure to capture fugitive VOC emissions shall install, calibrate, maintain, and operate a monitoring device which continously indicates that the hood or enclosure is operating. No continuous monitor shall be required if the owner or operator can demonstrate that the hood or enclosure system is interlocked with the affected facility's oven recirculation air system.

(h) Records of the measurements required in §§ 60.443 and 60.445 must be retained for at least two years following the date of the measurements.

(Sec. 114, Clean Air Act as amended (42 U.S.C. 7414))

(Approved by the Office of Management and Budget under control number 2060-0004)

§ 60.446 Test methods and procedures.

(a) The VOC content per unit of coating solids applied and compliance with § 60.422(a)(1) shall be determined by either Reference Method 24 and the equations specified in § 60.443 or by manufacturers' formulation data. In the event of any inconsistency between a Method 24 test and manufacturers' formulation data, the Method 24 test will govern. The Administrator may require an owner or operator to perform Method 24 tests during such months as he deems appropriate. For Reference Method 24, the coating sample must be a one liter sample taken into a one liter container at a point where the sample will be representative of the coating applied to the web substrate.

(b) Reference Method 25 shall be used to determine the VOC concentration, in parts per million by volume, of each effluent gas stream entering and exiting the solvent destruction device or its equivalent, and each effluent gas stream emitted directly to the atmosphere. Reference Methods 1, 2, 3, and 4 shall be used to determine the sampling location, volumetric flowrate, molecular weight, and moisture of all sampled gas streams. For Reference Method 25, the sampling time for each of three runs must be at least 1 hour. The minimum sampling volume must be 0.003 dscm except that shorter sampling times or smaller volumes, when necessitated by process

variables or other factors, may be approved by the Administrator.

(c) If the owner or operator can demonstrate to the Administrator's satisfaction that testing of representative stacks yields results comparable to those that would be obtained by testing all stacks, the Administrator will approve testing of representative stacks on a case-by-case basis.

(Sec. 114, Clean Air Act as amended (42 U.S.C. 7414))

§ 60.447 Reporting requirements.

(a) For all affected facilities subject to compliance with § 60.442, the performance test data and results from the performance test shall be submitted to the Administrator as specified in § 60.8(a) of the General Provisions (40 CFR Part 60 Subpart A).

(b) The owner or operator of each affected facility shall submit semiannual reports to the Administrator of exceedances of the following.

(1) The VOC emission limits specified in § 60.442; and

(2) The incinerator temperature drops as defined under § 60.443(e). The reports required under paragraph (b) shall be postmarked within 30 days following the end of the second and fourth calendar quarters.

(c) The requirements of this subsection remain in force until and unless EPA, in delegating enforcement authority to a State under Section 111(c) of the Act, approves reporting requirements or an alternative means of compliance surveillance adopted by such States. In that event, affected sources within the State will be relieved of the obligation to comply with this subsection, provided that they comply with the requirements established by the State.

(Sec. 114, Clean Air Act as amended (42 U.S.C. 7414))

(Approved by the Office of Management and Budget under control number 2060-0004)

[FR Doc. 83-28156 Filed 10-17-83; 8:45 am]

BILLING CODE 6560-50-M

federal register

Tuesday
October 18, 1983

Part V

Department of Health and Human Services

Office of Human Development Services

FY 1984 Coordinated Discretionary Funds Program

DEPARTMENT OF HEALTH AND HUMAN SERVICES

Office of Human Development Services

[Program Announcement No. HDS-84-1]

FY 1984 Coordinated Discretionary Funds Program

AGENCY: Office of Human Development Services, HHS.

SUBJECT: Announcement of availability of funds and request for preapplications under the Office of Human Development Services' Coordinated Discretionary Funds Program.

SUMMARY: The Office of Human Development Services (HDS) announces that competing preapplications will be accepted for new research, demonstration, evaluation and training grants and cooperative agreements authorized by legislation for its discretionary program and those of its constituent programs—the Administration for Children, Youth and Families (ACYF), the Administration on Developmental Disabilities (ADD), the Administration on Aging (AoA), the Administration for Native Americans (ANA), the Office of Program Development (OPD), the Office of Policy Coordination and Review (OPCR), and the President's Committee on Mental Retardation (PCMR). This program announcement consists of four parts. Part I covers background information, discusses the purpose of the HDS Discretionary Program, lists funding authorities, and briefly describes the FY 1984 process. Part II describes the 10 priority areas in which grants will be awarded. The priority areas are grouped into three major themes, and examples are given for each area. Part III describes the application process, who is eligible to apply, what funds are expected to be available, and the selection criteria. Part IV gives detailed guidance on how to prepare and submit a preapplication. It also includes copies of needed forms.

FOR FURTHER INFORMATION CONTACT: HDS/Division of Research and Demonstration 200 Independence Avenue, SW., Room 732E, Washington, D.C. 20201, telephone: (202) 245-6235.

DATE: The closing date for receipt of preapplications is December 6, 1983.

Part I: General Considerations

A. Scope of This Program Announcement

This announcement solicits preapplications for research, demonstration, evaluation, and training priorities to be funded in the third and fourth quarters of FY 1984 and the first and second quarters of FY 1985 by HDS programs for the elderly, Native Americans, the developmentally disabled, and children, youth and families in support of HDS' goals. It also solicits preapplications from State Social Service Agencies for grants to undertake measuable improvements in their programs to place special needs childrern in adoptive homes. This is the only HDS announcement to be issued for these priority areas. HDS may publish additional program specific announcements in FY 1984 that incorporate individual program priorities. A subsequent announcement may be published amending priorities in Priority Area 2.3 (Child Abuse and Neglect) if changes are required as a result of additional comments received during the comment period stated in the **Federal Register** on August 29, 1983 (Vol. 48, No. 108, pp. 39160-39163).

B. Background

In fiscal year 1984 HDS is continuing the coordinated discretionary approach begun in fiscal year 1982. This approach results in the joint announcement of several separate discretionary funding programs which had previously been announced and competed independently of each other. By conducting a coordinated discretionary process, HDS promotes cooperative and focused activity which addresses important issues common to all programs. By requesting preapplications HDS also encourages wider participation in its discretionary funds program. HDS receives 3,000 to 6,000 preapplications annually to its Coordinated Discretionary Funds Program, of which some 150 to 200 receive grants.

C. Discretionary Program Purpose

The purpose of the HDS Coordinated Discretionary Funds Program is to support: (1) Research activities that develop insightful, new ways of addressing human service problems; (2) the transfer and implementation of previously developed techniques and knowledge; (3) evaluations that assess the efficacy of existing programs; and (4) projects that improve the delivery and management of social services. *Above all, HDS discretionary funds are intended to expand the boundaries and utilization of human service knoweldge by drawing on new ideas from a variety of fields.* These new ideas and prespectives should stimulate professionals and the public to respond more effectively and humanely to State, Tribal and local human service needs.

In fiscal year 1984, the HDS Discretionary Funds Program will focus on increasing social and economic self-sufficiency through socioeconomic development strategies, the strengthening of families, and on improving the efficacy of social services. The program is based on the principle that the well-being of the public is best promoted by individuals, families and the communities in which they live. Social service needs are best defined and addressed through institutions at the level closest to the problem—State, tribal and local government, public agencies, businesses, private voluntary organizations, and families. The role of the Federal government in addressing social problems is:

- To adopt and implement national policies or programs aimed at promoting economic growth and prosperity, thereby strengthening the capacity of individuals to achieve or maintain self-sufficiency and the capacity of the family to care for all its members;
- To address those social service needs that require inter-State or national attention for effective resolution;
- To provide national leadership in: (a) The development of effective methods of addressing social service needs; and (b) the development of state, Tribal and local capacity to appropriately address social needs;
- To foster the efficient and effective use of available resources through improved social service management; and
- To target Federal budgetary support for services to that portion of the population in the greatest need of assistance.

In all cases proposed projects *must:* Stress concrete outcomes; impact the social, economic and physical well being of HDS populations over a reasonably short period of time; be replicable; undertake activities that go beyond the current state of the art; where applicable, promote the transfer and utilization of existing knowledge and techniques; and include dissemination plans which provide for the effective transfer of findings to appropriate audiences on a national scale.

The HDS Discretionary Funds Program is not intended to fund service programs or to serve as a source of supplementary funds for local activities which need operating subsidies. Applicants are also reminded that grantees are prohibited from using Federal grant funds to engage in any activity designed to influence legislation or appropriations pending before Congress.

D. Statutory Authorities

The individual statutory authorities under which grants and cooperative agreements will be awarded by the HDS Coordinated Discretionary Funds Program are as follows:

- Head Start: Head Start Act of 1981.
- Child Welfare Services: Section 426 of the Social Security Act, as amended.
- Runaway Youth Program: Runaway and Homeless Youth Act, as amended.
- Child Abuse: Child Abuse Prevention and Treatment Act, as amended.
- Adoption Opportunities: Title II of the Child Abuse Prevention and Treatment and Adoption Reform Act of 1978, as amended.
- Native Americans: Native American Programs Act of 1974, as amended
- Developmental Disabilities Special Projects: Section 145 of the Developmental Disabilities Assistance and Bill of Rights Act, as amended.
- Social Services Research and Demonstrations: Section 1110 of the Social Security Act, as amended.
- Training, Research and Discretionary Projects and Programs: Title IV of the Older Americans Act, as amended.

E. FY 1984 Process

As in previous years, the FY 1984 Discretionary Funds Program provides for a two-stage application process. Stage one addresses preapplications, while stage two deals with final applications. As part of stage one, Federal staff will initially screen preapplications administratively to determine their completeness and conformance with the requirements of this announcement.

Only preapplications that adhere to all screening requirements will be given further consideration. Nonconforming preapplications will not be afforded the opportunity to correct deficiencies or to resubmit. The screening requirements that will be used are discussed below in Part III, Section F. After the screening has been completed, conforming preapplications will be reviewed jointly by Federal staff and non-Federal experts against the criteria established for review of preapplications. HDS anticipates that approximately 500 preapplicants will be invited to submit final applications (stage two) in the early spring of 1984 to be given further consideration for funding. The final applications will be reviewed against the more stringent evaluation criteria listed in Part III, Section F. HDS anticipates that, subject to the availability of funds, approximately 150 to 200 grants and cooperative agreements will be made in the third and fourth quarters of FY 1984 and the first and second quarters of FY 1985.

Part II: Program Priorities

In setting the priorities contained in this announcement, HDS made provision for State, local and community participation. National organizations, States, local agencies and experts in the field proposed research, demonstration, and evaluation issues which should be addressed by the HDS Coordinated Discretionary Funds Program. As a result of those recommendations, a review of recent discretionary program activities and consideration of HDS goals, HDS has established the following priority areas for funding in FY 1984 and the first two quarters of FY 1985:

I. Socioeconomic Development Strategies
- 1.1 Employment and Income Generation
- 1.2 Community and Family-Based Care
- 1.3 Family Services through the Workplace
- 1.4 The Developmentally Disabled Adult

II. Strategies for Strengthening Families
- 2.1 Promoting Family Cohesion
- 2.2 Head Start
- 2.3 Child Abuse and Neglect Prevention
- 2.4 Runaway and Homeless Youth Intervention
- 2.5 Child Welfare
- 2.6 Adoption Opportunities
- 2.7 The Elderly and the Family

III. Strategies for Improving the Efficacy of Social Services
- 3.1 Program Management Improvements
- 3.2 Gerontology Training

A description of HDS's specific interests under each of these priority areas is contained below. Submitted preapplications should propose one or more of the followng activities:

- The transfer of existing technology of proven effectiveness from one area of human services to another or from other areas such as health services, mental health, management sciences, etc., to human services. This includes the effective dissemination of techniques and knowledge developed by previous human services demonstration and research projects funded by HDS or other sources.
- Development of quantitative data, where gaps exist, to better target resources on the needy.
- Development and testing of new service delivery modes with a high probability of increasing the efficacy of services at the policy level and the point of delivery.
- Investigations into the costs and benefits of existing service modes with a view toward modifying or terminating modes that have high costs and low benefits.
- Improvements in the programmatic and fiscal management of human services.
- Investigations into the causes of problems that lead to the need for human services. Such investigations should shed light on possible prevention and early intervention techniques.

I. Socioeconomic Development Strategies

A basic mission of human service agencies is to enhance the ability of families to care for their own members without the need for public assistance. For those whose needs make supplementary assistance necessary, human service agencies should seek to provide transitional support without replacing the role of the family. To accomplish this, human service agencies need to develop greater understanding of and sensitivity to the families they serve. They also need to garner the involvement and support of other organizations and individual professionals, both public and private. The HDS Coordinated Discretionary program, addressing many different specific subjects, is aimed at the task of strengthening families in their ability to support and care for their own members.

HDS will fund innovative projects that encourage self-sufficiency and prevent or reduce dependency on publicly supported social services in the following priority areas: (1) Employment and income generation; (2) Community and family-based care; (3) Family services through the workplace; and (4) the developmentally disabled adult.

Priority Area 1.1—Employment and Income Generation

In FY 1984 HDS will support projects that enable homeless youth, teen-age mothers, single or Head Start parents, older persons or individuals with developmental disabilities to enter or remain in the job market and become economically more self-sufficient, thus preventing or reducing dependency on public sources of support. Proposed projects should center on State, tribal or local implementation of successful employment approaches developed and tested recently. Emphasis should be placed on employer involvement (both private and public sector), creative use of existing knowledge, and linkages between existing organizations. Preapplications should focus sharply on the expected outcome of the proposed projects by addressing, at a minimum, the number of jobs to be filled or created, targeted job placements, and the employer's role in the project.

Over the past two years HDS has funded a large number of employment demonstration projects. Because of that, projects will be funded in FY 1984 only in a few specific categories in this priority area.

One of these categories is the retention of older workers through modified retirement policies, reduction of barriers to the productive functioning of older workers and the employment of retirees. Older workers are a valuable source of experienced, dependable, and motivated help. Retirees can meet seasonal or sporadic needs that the unemployed may not be trained to fill. This will become vital as the population of potential workers shifts toward older people, and is desirable because companies' needs for part-timers and temporaries have grown. HDS will support projects that demonstrate how private and public organizations can meet their needs for skilled part-time and temporary labor through the hiring of their own retirees or other elderly persons. HDS will also fund projects that demonstrate new approaches to educating management and union officials concerning the work skills and potential of the older worker and assisting them to adopt programs that would retain older workers beyond the normal retirement age.

The second category is the demonstration of youth employment, leadership development and peer counseling techniques used in innovative approaches to preventing or reducing the negative consequences of youth problems such as teenage pregnancy, runaway behavior, homelessness, and juvenile delinquency. The occurrence of any of these problems in the life of a youth all too often initiates or perpetuates a life-long cycle of poverty and dependency. The problem is often aggravated by the lack of a coherent response by the State, Tribal or local system of agencies dealing with youths, as well as by lack of constructive alternatives of existing responses like welfare dependency for adolescent mothers and incarceration for juvenile offenders. HDS will fund projects that bring to bear the resources of the multiple agencies dealing with youths within a state or locality, with primary emphasis on joint state agency efforts. Such projects should make new and imaginative use of youth employment, leadership development and peer counseling techniques in assisting teen-age mothers (and fathers), homeless or runaway youth, juvenile offenders, and other youths at risk, to take control of their economic life. Proposed projects should center on innovative alternatives to existing responses and promote the concerted action of agencies such as schools, juvenile courts, health providers, welfare agencies, and other youth agencies.

The third category includes employment techniques such as shared work, home-based work and youth entrepeneurships which have been used in both businesses and public agencies on an experimental basis. While these projects have proven successful, a continuing problem is the lack of dissemination and utilization of these by other businesses and nonprofit agencies. HDS will fund projects designed to effectively disseminate the results of successful employment generation techniques. Proposed projects should cover several States or Indian reservations and reach a large segment of businesses and public organizations which can benefit from implementation of the techniques being diseminated. Applicants should have a demonstrated marketing capacity and must identify the project(s) whose results they propose to disseminate.

In the fourth category HDS is also interested in determining what work opportunities exist that are appropriate for the developmentally disabled, Native Americans, hard to employ youths and elderly persons in high tech and other industries with projected scarcity of skilled labor. Consideration should be given to work opportunities in such areas as setting up, operating and maintaining automatic assembly machines, as this is an area of expanding employment opportunities. Demonstration projects may be funded that demonstrate innovative training and adaptations needed to realize this potential. Proposed projects must include on-site training and the participation of industry, lead to permanent employment, or create small businesses owned or operated by the target populations.

Priority Area 1.2—Community And Family-Based Care

More than 10 million Americans experience substantial difficulty in self care, mobility, capacity for independent living, and economic self-sufficiency. Approximately 5 million of these individuals are elderly, and 4 million are developmentally disabled adults and children. There are an additional 4 million elderly persons who because they live alone or in defective housing are at risk of losing their ability to reside in the community. In addition, the assistance afforded parents by the public school system in keeping developmentally disabled children at home disappears as those children reach adulthood.

It is estimated that 80% of care given to the disabled comes from informal sources such as the family, relatives, or friends. Informal sources, however, can be tenuous. The service needs of the disabled living at home may sometimes exceed the capacity of family or friends to meet them. For example, a breakdown in the well-being of a caregiver can precipitate institutionalization for an impaired individual as often as a deterioration of his or her own health.

Other factors jeopardize the traditional sources of informal support. Increases in two-career families have resulted in fewer people free or with sufficient time to provide daily care. With prolongation of the average life span, those over the age of 85 are often dependent on children who are themselves 60 years of age or older. Within the next 50 years the number of persons 85 or older will triple, and there will be proportionately fewer young people to care for the health-impaired. There will also be, however, more healthy older people who might help provide care to their peers.

Voluntary organizations have a unique capacity to enhance these support arrangements and have already done so in a number of communities. Churches, labor unions, fraternal organizations and others have the opportunity to identify and care for vulnerable individuals in their communities. The traditional commitment of these organizations to the welfare of their members provides a strong basis for their collaboration in organizing and delivering volunteer care to others. The Office of Human Development Services seeks to advance this concept by funding model projects for providing volunteer care to enable developmentally disabled and elderly individuals to live in the community, preferably at home.

Projects will also be funded to undertake innovative approaches to effective health promotion and maintenance, in particular through the use of family and neighborhood support networks. Efforts should focus specifically on disease and accident prevention, Alzheimer's disease, substance abuse, nutrition and physical fitness. Special emphasis should be placed on linking State, tribal and local agencies on aging and developmental disabilities, area agencies on aging, health providers, pharmaceutical companies, and businesses.

Another route to preventing institutionalization is the provision of

adequate housing for the elderly and the developmentally disabled. Projects will be funded which undertake to develop a comprehensive program of alternative living arrangements and to implement the initial stages of community or area-wide efforts to improve housing for developmentally disabled or older people. Proposals must include an assessment of relevant housing needs in the target area and an identification of potential resources for responding to those needs, including linkages with governmental authorities, community service agencies, businesses, labor unions, civic associations and other organizations which will be involved in the proposed effort. Mechanisms must also be identified for leveraging multiple funding source for responding to the housing and service needs of special populations including the frail elderly and the homeless.

Proposals must provide for the development of a comprehensive plan that includes multiple approaches for improving the living arrangements of developmentally disabled or older persons. This plan may include, but should not be limited to, such living arrangements as: congregate and shared housing; "granny flats" or ECHO housing; manufactured housing (including mobile and modular homes); home equity conversions; accessory apartments; "safe houses"; house swapping; housing repair and renovation to upgrade the quality of existing shelter (including innovative approaches to involving young people and volunteers in rehabilitation and maintenance programs); and other innovative approaches. Funds provided under this announcement may not be used for construction or renovation.

Priority Area 1.3—Family Services Through The Workplace

Today, more than ever, there is a strong relationship between the workplace and the family. As increasingly significant numbers of mothers and single parents enter the workforce, and as society becomes increasingly mobile, the workplace becomes more and more the focus of the communtiy. As such, the families of today are profoundly affected by the workplace environment and may increasingly come to rely on it for the support traditionally provided by the neighborhood community. At the same time, the workplace is impacted by the concerns of employers for their employees' families. Support for families strengthens families, and strong families increase the productivity of employees. HDS will fund projects intended to test and demonstrate ways in which the workplace can strengthen family cohesion, enhance the ability of the family to be self-supporting, and increase the capacity of the family to care for all its members regardless of age or disability. Proposed projects may be aimed at assisting employees or the community where the workplace is located.

HDS will fund demonstrations of social services programs in the workplace that are specifically to be sponsored by nontraditional groups. Examples include businesses, trade organizations, unions, foundatins, and consortia of businesses, nonprofit organizations and government agencies. In addition, the emphasis would be on small- scale projests with large matching funds from the sponsoring organization.

The objectives of projects focused on employees would be to increase employee family cohesion, keep employees on the job, and imporve employees' well-being and productivity. Projects in several areas will be considered for funding. The first of these is the development of a family-like environment in the workplace. Borrowing from Japanese style management, these projects would focus on managers' concern for the total welfare of the employee and include a wide range of nonwork activities. Of particular interest are projects designed to imporve the productivity and physical well-being of older workers by promoting health screeming and physical fitness programs through the workplace. The second area is that of family services provided in or through the workplace. Included here are information and referral, self-help groups, peer counseling and special programs on family well-being. The third area is that of optional programs developed in or through the workplace to keep families together. These projects would analyze the following: greater flexibility in office hours and work schedules, shared work, home-based work, extended leave for caregivers, and flexible benefit plans. They may also explore employer sponsored day care, employer incentives and support for adoption and foster care, and assistance in keeping frail or disabled mambers in the family.

The objectives of projects focusing on the community would be to increase business participation or to sponsor humam services to the community. An example would be a corporation making counseling services (e.g., alcoholism, drug abuse, child care) available not only to its employees, but to the community at large. Recognizing that much has already been done by businesses and corporations in community involvement, this area also solicits ideas to market and disseminate proven and successful approaches. Of special interest would be proposals from sponsors of successful community involvement and employee support projects who would transfer their ideas to other businesses or non-traditional providers that have limited experience in community projects.

Projects proposed should identify the specific outcomes anticipated. Results should be expressed in quantifiable terms, such as percent increase in productivity, number of handicapped hired or dollar amounts generated for community projects, etc.

Priority Area 1.4—The Developmentally Disabled Adult

There have been major changes in attitudes toward the provision of care and services to developmentally disabled persons during the past twenty-five years. It is now widely accepted that children with developmental disabilities can, if given appropriate services, develop personal, social and even vocational skills although the attainment of these skills may be at a slower rate than for other childern. As adults, if given the necessary support, most developmentally disabled persons can achieve a greater degree of independence and become contributing members of our society. It is also widely accepted that the great majority of persons with developmental disabilities are more likely to achieve their maximum potential residing in small facilities which provide them with the opportunity to participate more fully in the normal life of the community rather than in institutions. However, it is also recongnized that this will occur only if these individuals are provided with services that are sufficient in amount, appropriate in type, available when needed, and coordinated so that they supplement and reinforce each other.

The Office of Human Development Services is interested in the transition period between childhood and adulthood for developmentally disabled persons. Although the nation has made great strides in the recent past in providing support to children with developmental disabilities (especially through school systems under Pub. L. 94-142) this progress has not been matched for adults. "Aging-out" is the term used to describe what happens as developmentally disabled children reach adulthood, become ineligible for services through the school system, and seek services under a variety of local, State and Federal programs.

It has been shown that if a developmentally disabled person is without needed services for too long, a permanent reduction in self-sufficiency may result. If this happens, the benefits of services provided to that person as a child and a young adult may be lost.

Data suggest that some 95,000 students who are receiving special education services will leave school each year. A significant percentage of these students are developmentally disabled and may become part of the "aging out" problem. Only two States currently provide special education services to students over the age of twenty-one.

HDS will fund projects which contribute to current knowledge about the best methods to alleviate the problems associated with transition period following graduation from a special education program. For example, HDS is interested in strengthening links between families, services providers and State and local agencies to assure appropriate placement of developmentally disabled persons and continuity of needed services. We are also interested in how the recruitment and training of personnel who provide services in community based systems can be improved so that "aging out" and other developmentally disabled adults can avoid inappropriate institutionalization. To qualify for funding, proposed projects should not merely describe the problem, but deal with the issues associated with the successful integration of these individuals into society.

HDS is also interested in the special problems of older developmentally disabled people. As developmentally disabled people live longer, their families or other caretakers may no longer be able to meet the special needs caused by aging. Many older people with developmental disabilities have been inappropriately placed in nursing homes, even though this is one of the most costly and least desirable placements.

Aging developmentally disabled persons have basic needs for social, educational and recreational opportunities in common with other elderly people. HDS is interested in approaches to preventing the institutionalization of older people with developmental disabilities through the provision of services in the community.

A third area of interest to HDS is the services provided to families who care for their adult developmentally disabled family members. Although most developmentally disabled people reside with their families—placing tremendous pressure on those families—support services are more likely to be made available to developmentally disabled persons who reside in group homes or intermediate care facilities. Other difficulties may arise when the family members who care for an adult with developmental disabilities become too infirm themselves to continue those responsibilities.

HDS will support projects that address these issues. We are interested in obtaining data about the living arrangements and services required not only by adults who are mentally retarded, but also by those who have other developmental disabilities. We will also consider projects which involve the evaluation or improvement of:

(1) The criteria and procedures for determining placements in various residential settings;

(2) The quality and appropriateness of services available under diverse living arrangements;

(3) Methods to coordinate services that help developmentally disabled people remain in the community—for example, forging links between programs for the developmentally disabled with existing aging services, such as senior centers or nutrition programs; and

(4) Mechanisms to support natural and foster families who care for the develpmentally disabled, with particular attention to support throughout the life cycle, even after caretakers die or become to infirm to continue the responsibility.

II. Strategies for Strengthening Families

The family is an essential factor for most human service activities. Although government programs provide social services, the family has primary responsibility for the care of all its members. Therefore, the preservation of strong family bonds and support should be one of the primary objectives of any human service program.

HDS will innovative projects that promote the strengthening of families. HDS will consider projects in the following priority areas: (1) Promoting Family Cohesion; (2) Head Start; (3) Child Abuse and Neglect Prevention; (4) Runaway and Homeless Youth Intervention; (5) Child Welfare; (6) Adoption Opportunities; and (7) The Elderly and the Family.

Priority Area 2.1—Promoting Family Cohesion

There is a need to research family situations or conditions affecting participation in the workplace and interactions with institutions such as hospitals, schools, and the courts. Conversely, there is a need to identify the policies and practices of the workplace and these institutions, which have positive and negative effects on family life. Such a study would serve as the basis for codification of employer and professional practices with a view toward strengthening rather than undermining family cohesion.

A key element in a strategy to strengthen the economic and social self-sufficiency of families may be increasing the availability of accessible, affordable, child card *that benefits the child.* The availability of *quality* child care is related to reduced welfare dependency and higher family income and may have the potential for learning and developmental gains for children. To improve the quality, accessibility and affordability of existing child care services requires the cooperative efforts of local public, proprietary and non-profit child care providers, employers interested in child care as an employee benefit, early childhood educators and professionals and, most importantly, parents. HDS will fund projects that engage varied groups of these concerned organizations and individuals at the local level in specific efforts leading to measurable improvements in areas such as: family day care networks; employer-supported child care arrangements; infant and toddler care; and delivery systems that maximize private sources of support. An issue of particular interest, given the likelihood of increased demand, is measuring the impact of infant day care on the child, since there is a lack of information on positive or negative effects on the child.

Additionally, school age children constitute a sizeable child care population which will increase over the next decade, yet available day care services focus on children aged 3–5. The lack of appropriate and acceptable community based alternatives is reflected in the large number of households which appear to have no supervision for their children during non-school hours.

OHDS will support projects to develop *flexible response systems* for the care of school age children (with priority to those between the ages of 5 and 11) and that accelerate the diffusion of those innovations in a way that promotes their innovative programming and financing at the local and State level. Proposals should include provisions for parental choice of child care options and use of public school facilities where appropriate and cost-effective. Projects are expected to incorporate evaluation procedures to generate information which will

facilitate replication efforts administered at the local level. HDS will give priority to applications proposing modest budgets with significant matching support.

The final issue of interest under this priority area is parental incarceration. The fact of incarceration can cause serious disruption in families. Children often are placed in the child welfare system and have little continuing parental or family contact. There is a need to develop approaches to maintain the family relationship during the period that parents are incarcerated, to use that period, insofar as it is possible, to strengthen their parental skills and commitments and to provide appropriate support to their children. Such approaches can appropriately become the responsibility of voluntary child welfare agencies, Head Start programs or social service agencies whose purpose is to support the health and welfare of children.

HDS will also fund projects that seek to disseminate publications, curricula, project findings and bibliographies with a high probability or record of success in furthering family cohesion and self-sufficiency. Similarly HDS will fund projects that replicate and further develop successful techniques promoting family cohesion and self-sufficiency.

Priority Area 2.2—Head Start

An expanded challenge for Head Start in serving low-income children and their families, including Indian and migrant families, is to work closely with other human service agencies as facilitator, catalyst and mobilizer of resources within the communities which it now serves. The objective of such collaboration is to use the Head Start experience to enrich and strengthen low-income families with young children who have not had the benefits of Head Start enrollment, while at the same time improving Head Start program components. HDS intends to support demonstrations of specific approaches to this expanded role, based on the Head Start program's already proven successes in delivering educational, health, parent involvement and social services. To this end, HDS invites preapplications from Head Start grantees, including Indian and migrant program grantees, and other State and local, public and private organizations (e.g. day care programs, health providers, public schools, mental health centers, family service agencies and consultants) which propose to work collaboratively with Head Start grantees to address any of the following areas:

Health Services. There is a need to use Head Start's experience in mobilizing community medical, mental health, dental and nutritional resources in fostering the health of all children. Such efforts should also result in measurable improvements in health services for children who are enrolled in Head Start.

Parent Involvement. Head Start emphasizes the role of parents as the principal educators of their own children and recognizes the importance of adult education opportunities for low-income parents of young children. There is both a need to improve Head Start approaches to parent education and to foster the use of existing approaches by the wider community to enhance parental skills and thus strengthen families.

Social Services. Head Start's commitment to ensuring necessary social services for families of enrolled children indicates a recognition that the well-being of young children reflects the well-being of their families. The linkages, coordination and family support provided by Head Start programs can be used as guidance to develop community processes to ensure provision of social services to Head Start families after enrollment of their children ends and to other families in need of such assistance.

Education. Early childhood education is the foundation of the Head Start program. Variations and improvements devised over the years have included special attention to parental roles as educators of their own children (through the Parent-Child Center and other pilot programs) and mainstreaming of handicapped children in Head Start classrooms. These and other Head Start education improvements can and should be used in other preschool and child care settings. Particular attention is needed to improve the transition of handicapped Head Start children to public school and to integrate health, social service and parent education activities into the classroom's education curricula. HDS is particularly interested in forgoing closer linkages between handicapped children's agencies, child care, and Head Start programs for their mutual benefit.

Research is also needed to provide empirical knowledge on the differences—if any—in outcomes and cost between home-based and center-based Head Start. HDS will support studies to identify the characteristics of children and families most likely to benefit from home-based services (in terms of developmental functioning, age, ethnicity, language and family structure, socioeconomic status, and geographic location). Studies will also be supported that identify which program characteristics (for example, number and length of home visits per month, opportunities for group experiences with other preschoolers, types of parental involvement, numbers of families served by a home visitor, and home visitor training) have a positive impact on child and family gains. Finally, HDS will support studies which compare home-base with other means of delivering Head Start services in terms of development outcomes and costs.

HDS also seeks to assist in innovative delivery of Head Start services to otherwise unserved populations. One such innovation which can be developed and tested is the Use of family homes for delivery of Head Start. Similar to family day care home networks, this kind of Head Start program would involve a network of family homes serving Head Start groups of up to six children. Projects must meet Head Start performance standards with emphasis on parental involvement. Such an approach may be especially useful in serving rural populations where center-based programs require extensive use of transportation.

Priority Area 2.3—Child Abuse and Neglect: Prevention, Protection and Treatment

Child abuse and neglect continues to be a serious problem. It is projected that over 1.5 million children will be subjects of reports of abuse and neglect in 1983. Awareness of child maltreatment has vastly increased the number of reports and has turned the attention of human service planners to the necessity for improved prevention, protection and treatment. HDS will support a wide range of research, demonstration and service improvements. Emphasis will be placed on assisting public and private agencies, including Indian Tribes, to incorporate service improvements for preventing and treating child abuse and neglect and for assuring protections for children who have been endangered either in their own homes or in out-of-home placements. A specific program thrust will seek to bring about better coordination between public school systems and child protective services. This emphasis on program improvement and integration extends to military installations so as to strengthen military families. In order to assist States and communities to imporve their capabilities to effectively deal with child abuse and neglect, HDS will support projects which address specific issues in

the areas of prevention, protection and treatment.

Such an issue is the use of remedial preventive projects aimed at maltreated adolescents. Most preventive programs have focused on parent education, perinatal support and information and referral for families in stress. To date, there have been little attention given to adolescence as a life stage and maltreated adolescents as a population appropriate for preventive programs. Yet, if maltreated children are particularly at risk of becoming maltreated parents, then preventive interventions aimed at them may break the cycle of abuse and neglect. One attempt at such a preventive program is the Parent Anonymous teen-age program recently organized in a number of States.

Another key prevention issue is building capacity and resources in minority communities to prevent child abuse and neglect. Minority families are over-represented in child abuse and neglect statistics. There is a need to support preventive, family-supportive networks in minority communities with the purpose of helping families with child-rearing problems to avoid the risk of child maltreatment.

Approaches have been piloted in some minority communities, using parent aides, peer support and parent education as means of providing culturally sensitive support to families. HDS will support further development and implementation of such approaches in Black, Native American and Hispanic populations.

School systems, in coordination with child protective agencies, can serve a unique function in the prevention of child abuse and neglect because of the access they have to large numbers of children. Their visibility in every community of the Nation gives them a special capacity to coordinate with other community resources to see that vulnerable children are recognized and receive necessary services. Examples of school system prevention programs could include, but are not limited to: training for school personnel in recognizing at-risk children and providing appropriate preventive assistance to them; development of after-school programs for children at risk of neglect; use of volunteers to assist school counselors and/or school social service workers to provide outreach to families with problems affecting the welfare of their children; coordination with local Parents Anonymous programs to provide parent education and children-serving-children groups; and improved reporting to, and obtaining adequate feedback from, child protective service agencies.

Also possible are programs of perinatal prevention for adolescent parents through public school systems. While a number of urban hospital-based perinatal programs have been tested, little is known about how to use the school system as a vehicle for the prevention of infant maltreatment by adolescent mothers. What is known is that the school system appears to be the medium through which these young mothers can be reached. What is needed is experience-based information on cost-effective urban and rural approaches to prevention using the school system as a means of access to adolescent mothers.

In the area of protection against child maltreatment there are several issues of interest to HDS. One of these is the development of procedures for ensuring protection for handicapped infants. State medical, social service and judicial systems have had to deal with instances of medical, nutritional and social neglect of impaired infants. The development, for national dissemination, of model procedures to ensure appropriate child protective action has been identified as an important need. HDS will support development and implementation of such procedures.

Approximately 61 percent of all substantiated cases of child maltreatment are cases of Child Neglect. This category of reports often initiates costly prolonged stays in the child welfare system. HDS intends to support testing of innovative program designs and development of staff training and decision-making guidelines for dealing with child neglect cases with resulting reduction in the length of service and necessity for foster care placement.

Another protection issue is the number of children referred to child protective services due to lack of supervision. This subcategory of neglect, the largest single category of substantiated maltreatment, accounted for 21 percent of all substantiated cases in 1980. The field has not examined the reasons why children are left unattended by their caretakers, nor has it addressed the issue of whether child protective agencies should have the dominant role in addressing the problem. A number of day care needs assessments have been conducted, but these have only tangentially addressed the issue. An investigation of the characteristics and attitudes of parents reported for leaving children unsupervised and the child service agency's response to such reports is needed in order to devise ways of reducing and handling this form of endangerment.

Emotional maltreatment (mental injury or psychological abuse) is a form of abuse which remains most difficult to define, identify, investigate, adjudicate and treat. Protection and treatment require intense involvement and a high level of therapeutic skill, although little guidance has been developed for providers to cope with this form of protective service. The following are needed: development of exact operational definitions to improve identification, investigation and adjudication; clinical diagnostic information to assist nonprofessionals facing mental health decisions; and guidelines for protective service professionals to decide issues of in-home vs. foster care placement.

Significant problems exist in judicial and social service management of cases of child sexual abuse and exploitation. They include confusion of roles, practices which compound trauma to the child, lack of legal representation for the child in criminal cases, confusion of procedures when companion cases are before two courts and little attention to protection for the child victims. HDS will support efforts to improve court procedures for dealing with child sexual abuse and sexual exploitation cases.

The litigation of child abuse and neglect cases often results in adversarial proceedings that make parental cooperation difficult. This, in turn, increases the possibility of out-of-home placement of the child. The judicial community agrees that there is an overuse of litigation, and seeks to halt this trend and to define alternate measures for conflict resolution. Alternatives to litigation in child maltreatment cases might include; Screening and referral to community agencies for needed services; mediation; or lay hearing panels. Such approaches need further development and testing before they can be supported for widespread replication.

A study of nonprofessional sources of child abuse and neglect reports is also needed. While most States do not require persons in nonprofessional roles to report suspected cases of child abuse and neglect, in fact 45 to 50% of reports are made by such sources. No other category of source approaches that large a percentage of total allegations. At the same time, these nonprofessional reporters have a much lower substantiation rate than do the professional ones. Consequently, an inordinate amount of child protective service time and resources is spent in processing cases which are not

substantiated. A study is needed to discover the reasons for the relatively low substantiation rates of these sources so as to direct public education and child protective service training to the reporting of valid cases and their appropriate substantiation.

In the area of treatment, HDS is interested in the role of elderly and retired persons in the treatment of child abuse and neglect. Current demographic trends show an increasing population of older people. This group represents a potential source of support and nurturing for children who have been maltreated, and for the prevention of out-of-home placements. The Foster Grandparent program represents one model. It is important to determine how cadres of available and willing elderly can be most effectively and appropriately used in a variety of roles: As tutors, friendly visitors, parent surrogates for maltreating parents, homemakers, and social service aides. HDS will support several projects defining innovative uses of the older population in meeting the needs of maltreated children and their families.

Evidence has shown that there are practices and procedures with demonstrated effectiveness that require appropriate implementation through the child protective service system nationwide. One particular cost-effective practice is the use of parent aides working with child protective service agencies, sponsored either by public social services or private human service agencies, to provide in-home preplacement preventive services to families where abuse and neglect patterns have been identified. Other such practices include perinatal prevention services, peer support groups, home visitor programs for at-risk newborns and multidisciplinary case consultation for difficult cases. HDS intends to support as many as 100 one-time seed projects to implement these service improvements, with local resources being used to continue them after an initial year of start-up support.

Priority Area 2.4—Runaway and Homeless Youth

Adolescents normally face considerable changes in their life, including preparation for leaving home, completion of education, entering the workforce and assuming new roles as adults and parents. The chances of failure in these developmental tasks are considerable. While much goes right, serious difficulties are often encountered by adolescents and their families which lead to runaway behavior and family instability. Data on runaway and homeless youths indicate two distinct patterns of problems. Younger runaways evidence problems focused primarily on child-parent conflict, while older youth (aged 16 to 18) present a range of more severe problems, such as substance abuse, juvenile delinquency, lack of health care, unemployment, prostitution, and lack of independent living skills.

HDS estimates that approximately 5.6 million young people need help to address these problems, which in many instances are interrelated and require comprehensive solutions. To address those problems, HDS will fund projects intended to reunite families of runaway youths; develop the ability of homeless older youths to live independently; improve outreach that links runaway and homeless youths with effective programs and promotes family reunification; and combat and prevent prostitution.

The key to reuniting families and maintaining family cohesion is the need to develop and maintain family communications through aftercare (support services for runaway youth and their families) in order to prevent recurrent runaway behavior. There is a need to test and demonstrate models of effective aftercare services. Unresolved questions include: how to develop and maintain necessary linkages with related social services; how to provide services from multiple sources without requiring that the family go to a variety of agencies; how to develop and ensure funding support for the effective delivery of aftercare services; and how to use peer group counseling and other family support approaches.

HDS will also fund projects intended to implement existing models of independent living that center on strong business participation and are appropriate for youth who are "homeless" or "throwaways," rather than "runaways." These youth, often older, are highly vulnerable, difficult to serve and have specific needs which must be addressed in concert with independent living needs. There is also a need to demonstrate effective techniques for the management of leisure time for youth who are living independently. Such approaches might involve intergenerational programs, community service projects, remedial education, relationships with "host families," peer group recreational activities, involvement with the arts or working with handicapped and disadvantaged populations.

In the area of outreach there is a need to improve and expand the use of youth workers for early intervention. HDS estimates that over 700,000 youth run away each year. Many of these youth do not reach shelters or do not find assistance needed for protection. They are at risk of homicide, suicide, rape, sexual exploitation and other forms of violence. There is a need for the dissemination and implementation of program models which recruit, train and place in the field detached youth workers to provide outreach and early intervention to runaway youth. Such programs should focus on bringing runaway youth into effective protection, independent living, or family reunification programs as appropriate. They should also make use of existing outreach resources such as voluntary organizations, peer group networks, information and referral agencies, and the media.

There is an urgent need to develop early prevention and intervention approaches to deal with juvenile prostitution. Such strategies might include assignment of youth social workers to police patrols and the use of rehabilitated youth in street outreach, community education, and peer counseling. Studies of juvenile prostitution indicate the importance of on-the-street kinds of assistance. What kind of assistance and how it should be organized are areas that need to be further explored.

A final area of interest is the development of youth leadership opportunities. Serious economic and social gaps divide the professional and business leadership of the nation from many gifted and talented, but socially disadvantaged, youth. Many youth, especially minority youth, have very little access to the kinds of role modeling and apprenticeship training that is an expected part of the experience of young people who do not suffer the same social disadvantages. There is a need to develop approaches to link such youths with professional and business leaders in their communities who will take upon themselves the responsibility of serving as mentor and counselor in defining their educational, career and leadership options.

Priority Area 2.5—Child Welfare

The Adoption Assistance and Child Welfare Act of 1980 (Pub. L. 96–272) placed primary emphasis on reduction of unnecessary use of foster care, reunification of children in foster care with their own families (in those cases where it is possible) and provision for adoption of children who cannot be returned to their own families. A continuing need exists to provide permanency for children who are

separated from their families, to increase the adoption of special needs children (particularly minority and handicapped children), and to reduce the length of time children are in temporary out-of-home placements. HDS will support projects designed to strengthen services in the areas of preplacement prevention, permanency planning and family reunification.

There are four issues of interest in the area of prevention of unnecessay foster care placement. The first is the development of information to aid state and tribal administrators in purchasing and managing preplacement prevention services. Administrators must make many decisions on how to contract for, monitor and evaluate services used to assist families at risk of having their children placed in foster care. Comparative information is urgently needed on the appropriate use of higher-cost professional and various lower-cost services, including day treatment, aftercare and paraprofessional or volunteer assistance.

A second issue is the availability of preplacement prevention services appropriate for minority families. Child welfare studies indicate that minority children are disproportionately represented in the child welfare population, e.g. more in care, fewer adopted, and fewer returned to parents. A 1980 study found that Black and American Indian children were placed at a rate three times higher than white children and that one-fourth of the Hispanic and one-third of the Black children had been in care longer than five years. Despite these findings, agencies have consistently failed to implement programs which use the strengths of minority families and communities in providing services. States need assistance in provising effective preplacement prevention services and in planning for appropriate content for those services. Applications should not exceed $100,000 and should be from agencies having responsibility for geographic areas with concentrations of Black, Hispanic or American Indian populations. Applicants should be public agencies or voluntary agencies which propose close collaboration with appropriate public agencies and which provide assurances that the new approaches will be continued after the demonstration period.

A similar issue is the availability of preplacement preventive services adapted to other special populations. Staff in child welfare agencies face particular problems when assessing the preventive needs of children who are mentally retarded, emotionally disturbed and/or physically handicapped. In addition, recent statistics indicate that children in stepparent families are another population at increased risk of placement. Specific family counseling approaches are needed to address this greatly increased population. There is a need to develop and document approaches to planning for and providing preplacement preventive services to selected special populations. Applicants should either be public agencies or voluntary agencies which propose close collaboration with public agencies responsible for child welfare services.

A final prevention issue is education for parenthood for families in the child welfare system. Curricula for use in community-based and school-based parent education programs have been developed and demonstrated for general populations of adolescents and young adults. There have been numerous parenting curricula developed by public and private entities. There is a need to use such curricula with families who are at risk of losing the responsibility for the rearing of their children. Through such curricula, they can be helped to learn the roles and responsibilities of parenthood and thus reduce the potential for family disruption. Projects to demonstrate the use of such curricula with the at-risk family population may be supported to address this need.

The second set of issues in this priority area relates to improving foster care. One of these issues is the improvement of licensing practices. States continue to express a need for help in dsigning effective LICENSING PROGRAMS for child-placing agencies, child care institutions and foster family homes. There is a need to implement the technology of child welfare licensing at State levels. There is a comparable need in Indian child welfare systems. Excellent approaches have been developed over the past several years which treat child welfare licensing comprehensively and emphasize permanency planning. HDS will award small grants ($20,000) to State agencies and tribal organizations to make it possible for them to improve their licensing programs.

There is a need to mobilize the resources of foster parent networks to help provide steady recruitment for specialized foster homes for children with special needs in order to keep the supply constantly available. Many child placement agencies have only short-term campaigns to meet emergency needs. Foster parents themselves can have a lead role in ongoing recruitment campaigns for foster parents. Projects to address this need should develop and test approaches, with supporting materials and resources, and should be sponsored by foster parent organizations in conjunction with agencies at State or local levels and should not exceed $20,000.

There is also a need for enhancing the role of the parent in child welfare service. Efforts to prevent unnecessary placement in foster care, to reunify children with their families and to monitor permanency decisions may involve complicated procedures that undermine parents' roles. There is a need to demonstrate new and effective techniques for assuring parental involvement in critical decisions about basic child welfare services. Such techniques need to be designed not only for use by managers and workers in the child welfare system but also by parents themselves so that they can appropriately participate in the decisions affecting the lives of their children and themselves.

Of particular interest to HDS is the reunification of children in foster care with their families. Adolescents, mentaly retarded and physically handicapped children and minority children, require particular knowledge, sensitivities and skills on the part of child welfare workers to accomplish the goal of reunification. This need is demonstrated by the overuse of institutional care for these children, the runaway behavior of older children, and the extended periods of their stays in out-of-home placement. There is a need for widespread implementation of successful models of reunification for these children with their families, and procedures for States to pay for those services rather than relying only on traditional foster care. Coordination of child welfare agencies and courts in the use of foster care is also needed. The impact of the Adoption Assistance and Child Welfare Act of 1980 has not been uniform between the States' and Tribal judicial and social service systems. There is a manifest need for improved coordination, clarity of roles and functions and facilitation of the requirements for periodic case reviews and dispositional hearings for children in foster care. The courts play a vital role as well in assuring that permanent plans are made and carried out for children receiving services from child welfare agencies. There is a need for development and implementation of clear models for court-child welfare coordination which can be replicated to meet this continuing need.

A number of research issues in child welfare services also need to be addressed. First, there is a need to analyze the types and degrees of change in the provision of adoption and foster care services for Indian children during the initial five years of the Indian Child Welfare Act (Pub.L. 95-608) and the impact of joint planning and child welfare reform resulting from the eligibility of Indian tribes for direct grants under Title IV-B beginning in FY 1983.

Second, an examination is needed of long-term foster care. Fully 40% of children in foster care remain in placement for two or more years. Only a small proportion of these children are reunited with their families, after intensive work to rehabilitate family structuring and functioning. Unless these children are adopted or reach the age of emancipation they will continue to be in extended foster care. There is a need to understand further the characteristics of these children and their families and the reasons for the length of their stay in foster care in order to address better their permanency needs and to promote the positive contribution to society.

Finally, there is a need to identify the factors which lead to adoption disruption and reentry into foster care (recidivism) in order that State, Tribal and local agencies can adjust their policies, practices and procedures to decrease the likelihood of such disruptions and recidivism.

Priority Area 2.6—Adoption Opportunities

During the past four years, the Adoption Opportunities Program has developed extensive resources, training materials and program models to address critical barriers to the adoption of special needs children. An important issue at this point is the use by States and communities of these resources and information to increase measurably their capacity to place special needs children.

HDS is interested in proposals from State public social services agencies for projects which will help States (1) to increase the number of special needs children placed and (2) to institutionalize improvements in the State adoption programs which will result in sustained increased levels of adoption. In carrying out this effort, applicants should work closely with State Developmental Disabilities Councils, voluntary agencies, parent groups, minority organizations and other interested agencies and organizations.

Proposals must address the following requirements:

1. The applicant must propose a specific increase in the number of children to be adopted as a result of the effort, above those adopted in the most recent complete year for which statistics are available. A two year project period will be permitted, with the understanding that the bulk of the funds will be spent in the first 12-15 months, but the State will have up to 24 months to report results.

2. The applicant must document how it will institutionalize any improvement in the system which results from the grant, either at the State level or in a group of counties or a metropolitan area which emcompasses a significant number of waiting children.

3. The applicant must submit a project which is developmental in nature, and which is a one-time effort to enhance its ongoing program. Project funds should be used to help the applicant address critical barriers in the State, and to pull together new skills, technology, resources and systems, and incorporate them into its ongoing program so as to develop a permanent capability to increase the number of children adopted. To the maximum extent possible, the project should be staffed and managed with existing staff.

4. The applicant must certify that it can receive the grant and begin it promptly, without unnecessary delays because of internal requirements for receiving funds.

5. In addition to the discretionary matching requirement of 25%, the applicant should identify some additional IV-B funds, beyond those spent in the previous year, to add to the State contribution to the effort. Federal funds should be viewed as seed money to help the State undertake a needed improvement, rather than as funds to run a complete project.

Based on the number of children in care, the following States may apply for grants ranging from $75,000-$125,000: New York, California, Ohio, Pennsylvania, Illinois, Michigan, Indiana, New Jersey, Florida, Massachusetts, North Carolina, Virginia Minnesota, Missouri, Maryland, Texas, Wisconsin, Georgia, Alabama, and Oregon. The remaining States may apply for grants ranging from $25,000-$65,000.

Priority Area 2.7—The Elderly and The Family

Applications are invited that propose innovative approaches to promoting the elderly as viable members of the family and the community. Consideration will be given to applications that emphasize intergenerational linkages between the young and elderly within the family and the community. Proposals must provide for the development and implementation of methods by which communities can strengthen the family by taking advantage of the mutual benefits that the elderly and their families can provide each other.

Proposals should establish or support institutional linkages among organizations which impact the family such as: the court and law enforcement system; educational institutions; community service agencies; businesses; labor unions; civic associations and others. Proposals may address, but are not limited to, activities which: encourage foster care agencies to consider placement of children in the households of older families; involve older persons in the provisions of services to the fmaily; involve older persons in educational activities for younger family members; involve older persons in before-and-after school care programs for unsupervised children; support intergenerational physical fitness programs; utilize arts and humanities programs to involve older persons in the transmission of knowledge, heritage, life experiences, skills, and strengths to younger generations; involve older persons in working with younger family members to alleviate or prevent a variety of youth problems, e.g., runaway youth, drug abuse, alcoholism, emotional stress, teenage pregnancy, juvenile delinquency, and youth crime; involve older persons in working with handicapped and sick children; or provide opportunties for older persons to serve as supports for single parents and two-working-parents families.

Applications are also solicited for projects which identify, adapt, and transfer approaches and techniques which have proved to be highly successful in strengthening the family as a caregiver and in linking the family with the formal community care system to meet the needs of impaired older persons.

III. Strategies for Improving the Efficiency and Effectiveness of Social Services

More effective and efficient administration of programs has long been a major thrust of HDS discretionary activities. Extensive research and development activity has already been undertaken on evaluation techniques, financial management systems, management information systems, fees for services systems, and other management techniques. HDS proposes, as a third theme of its Fiscal Year 1984 Discretionary Funds Program, to foster an increase in the use of the techniques and the approaches that resulted from those previous efforts.

This should result in an enhanced capacity to administer and to develop service programs responsive to local needs and priorities. HDS seeks to promote innovation and flexibility in training, State and grantee cooperation, Tribal relationships, the dissemination and utilization of grantee R&D products, program management and evaluation.

Priority Area 3.1—Program Management Improvements

A desirable goal for society is to reduce to a minimum the social and economic problems which contribute to the need for publicly supported social services. It is accepted, however, that some level of service may continue to be needed. To provide those services most efficiently requires effective program management at all levels, from the policymeker to the caseworker. In Fiscal Year 1984, HDS will continue to promote effective program management by placing emphasis on dissemination, use of advanced information systems, evaluation and specific program improvements.

A major emphasis of HDS' R&D efforts in Fiscal Year 1984 will be the effective dissemination of practices and techniques that have been developed through previous HDS funded projects and/or have proven their value under actual service conditions in a particular locality or State. Dissemination efforts will be promoted by making funds available to State, Tribal, local and private organizations that have developed an effective new technique, and that are willing to serve as trainers or disseminators of the technique. Proposed projects should cover several States and have the capacity to reach a large segment of organizations which can benefit from implementation of the techniques being disseminated.

Applicants should have a demonstrated marketing capacity and must identify in their preapplication the existing or previous project(s) whose results they propose to disseminate. As part of this effort, HDS will also make available small grants (of no more than $20,000) to organizations that wish to replicate and implement techniques recently developed by others.

Specific areas in which successful demonstration efforts have been done, and in which dissemination is needed, are:

- Insuring participation of older persons in programs that require participants to pay cash or in-kind for some or all the services;
- Adoption of special needs children;
- Effective techniques for more efficient management of human services;
- Independent living for runaway youth, older foster care youth, the elderly and the developmentally disabled;
- Efficient licensing and monitoring of day care quality;
- Head Start models of service to unique population groups;
- Service outcomes and efficacy indicators;
- Models of successful profit-making businesses owned/operated by the developmentally disabled;
- On-site work projects in the private sector, leading to employment of HDS populations;
- Family reunification
- Models of successful outreach to developmentally disabled minorities and underserved groups;
- Models of successful pre-incarceration programs to prevent unnecessary and inappropriate detention of the developmentally disabled juvenile offender;
- Successful models of volunteer services.

A second emphasis in this area is the effective use of management and service information systems. Social service managers need on-line access to information designed to allow services to be nonitored and problems to be addressed. Caseworkers need to be able to process and track clients using interactive terminals and access to a variety of databases. Policymakers must be able to plan and target needs on the basis of accurate, timely, and appropriate aggregate data.

Resources must be mobilized to diffuse information management systems throughout human services agencies. In order to promote this, HDS will fund innovative projects that:

- Stimulate private sector involvement in systems and software development for human services;
- Transfer computer technology from businesses and large human services providers to smaller providers, as well as from providers with existing cost-effective systems;
- Increase the professional skills of managers in systems use and development;
- Identify and develop applications packages for use with microcomputers and across State and local programs;
- Advance the state-of-the-art in automated high level management systems through development of database systems integrated across health, human services and income maintenance programs;
- Promote development and use of voluntary national databases and standards so that they will become self-sustaining as quickly as possible;
- Develop and demonstrate low cost systems technology including both hardware and software that will permit integrated analysis of diverse human services data bases. The techonology developed should be available for transfer to a varety of locations requiring minimum time for implementation and operations.

In addition, HDS will fund projects which promote the ability of existing aging and children, youth and family resource centers, as well as university affiliated facilities for the developmentally disabled, to promote the effective use of information systems technology by human services agencies. This includes the capacity to promote human services system users groups and software exchanges.

HDS is also interested in assisting nonprofit service and community organizations as well as State and local human service agencies to conduct and use program evaluations to more efficiently and effectively manage their human srevice programs.

Over the past ten years, significant amounts of funds have been invested in developing planning and management information systems at the State, local and service provider level. However, in most instances, there has not been a concomitant investment in the final stage of the management process, that is, the area of program evaluation.

In order to elevate the role of program evaluation in the management process, HDS will fund nonprofit organizations, States, consortia of States or local governments that address any of the following areas:

- Synthesize existing or current evaluation studies conducted by both public and private organizations that focus on specific policy issues that have a direct bearing on HDS program operations at the State, local or grantee level;
- Demonstrate innovative methods that will enable State and local governments and grantees to elevate the evaluation function in their respective organizations. Demonstrations of this nature may include the development of step-by-step instructions in workbook type formats that will show managers how to assimilate the evaluation function in their organization and how the results of evaluations can be used to impove the use of existing resources or improve program preformance;
- Demonstrate the use of evaluation systems as an integral part of existing planning and management information systems. Efforts in this area would capitalize on existing information sources within the agency

complemented by secondary or exogenous sources of information. The objective here is to build ongoing agency evaluation systems capability from an information systems and analytic standpoint;

• Performing evaluations on statewide programs in comparison with available national data from existing voluntary databases for the programs related to aged, child welfare, and child abuse and neglect. Evaluations should include innovative approaches for analyzing aggregate data, such as, linear programming approaches to optimizing the performance of the child welfare system in terms of foster care placement, length of stay and recidivism rates.

Emphasis should be given to those projects that propose short term evaluation projects that will have a direct benefit to human service managers affecting multiple HDS programs.

HDS will also seek to improve specific programs by funding projects that:

• Share information among States or useful techniques in block grant management and programming;

• Study and analyze permanency planning issues related to developmentally disabled adults, particularly within a community setting;

• Identify strategies and resources that are critical to advocates in ensuring the rights and appropriate placement of incarcerated developmentally disabled offenders;

• Demonstrate technical assistance exchanges among developmental disabilities protection and advocacy systems focusing on expanding and enhancing minority outreach activities in States with significant minority populations. Proposed activities should include a description of how individuals and organizations from the targeted minority communities will be involved;

• Demonstrate involvement of businesses, philanthropic organizations and State bar associations in supporting State developmental disabilities protection and advocacy systems to develop additional funding resources, collaborative agreements, etc;

• Increase the productivity of nutrition programs for older people. Proposed activities may include: nontraditional approaches to serving meals in congregate settings including meal plans other the the 5-day a week noontime meal; improved cooperative food purchasing programs for older persons living in their own homes; and creative contract management techniques which more effectively deliver nutrition services to the home-bound older person.

HDS is particularly interested in projects that review and explore financial arrangements designed to cover social service costs, e.g., inclusion in HMO benefit packages, analysis of effective voucher systems, financial planning for young adults who are now too old for child oriented services (aging out), co-payment, etc. Such projects can be aimed at synthezising the results and policy implications of recent or existing experiments. They can also be intended to test or demonstrate how such arrangements would work.

Priority Area 3.2—Gerontology Training

Proposals under this priority area are invited only for projects that strictly impact on one or more of the following program priorities:

Career Preparation.—Proposals are solicited which would undertake innovative approaches designed to improve the quality and availability of:

(a) Gerontological education for persons preparing for careers in the field of aging. Proposals should stress the development of multiple public and private sources of support for viable, quality training programs in institutions of higher education. Academic institutions serving rural areas and community colleges are encouraged to apply. Special consideration will be given to applications that show high potential for the placement of graduates in jobs in the aging network or in aging-related public and private sector employment.

(b) Gerontological training by institutions of higher education for persons preparing for careers in certain occupations which have a significant impact on the lives of older people. Grants will be made to colleges and universities for the inclusion of gerontological content in the training of students in the following professional and paraprofessional areas: health and mental health care; consumer product engineering; library sciences; hospital administration and discharge planning; nursing home administration; personnel guidance; and public administration, including city management, housing and urban planning.

Proposed projects should limit stipends to no more than 20% of total project cost.

Continuing Education and Training. Proposals are solicited which would undertake innovative continuing education programs and knowledge transfer efforts designed to influence attitudes and develop competencies in aging necessary for professionals currently engaged in the provision of services which impact in a significant way on the lives of older persons. Proposals will be considered that encourage the development and nationwide dissemination of continuing education curricula, instructional materials and programs by national organizations and associations of those professions whose members have a significant impact on the quality of life of older people. Of primary interest is the inclusion of gerontological emphasis on continuing education programs for individuals engaged in the professions listed in the preceeding paragraph. Special attention should be given to the innovative transfer of information to these individuals in their own professional environment.

Minority Training and Development. Proposals are solicited which would increase the number of individuals who are members of minority groups working in aging-related jobs through innovative efforts that: (a) Upgrade the quality of gerontology programs at Historically Black Colleges and Universities as well as other institutions of higher learning with significant percentages of minority students; (b) Increase the placement of minority graduates of gerontology career preparation programs in public and private sector aging-related jobs; and (c) Promote the development and placement of minorities as program managers in aging network and aging-related private sector jobs.

Education opportunities for Older Persons. Proposals are solicited which would increase the opportunity for older persons who are economically and socially needy to live more productive and independent lives through adult education and other training opportunities that:

a. provide second career and job retraining activities;

b. provide for improving the quality and increasing the availability of pre-retirement education programs;

c. provide training to older people for volunteer and other public service opportunities;

d. provide innovative approaches to educating older person in life-coping skills including nutrution education, personal safety and money management; and

e. provide creative mechanisms for increasing the participation of older persons in adult education programs.

Proposals may be in the form of requests for funding for education and training, or knowledge transfer and utilization projects, or a combination thereof. Special consideration will be given to those proposals which:

(a) Undertake to establish strong linkages with Older Americans Act programs and agencies and ensure the

relevance of career preparation and continuing education training programs to the actual needs of the local service systems through consultation concerning curriculum design and planning with State and Area Agencies on Aging; and

(b) Where applicable, propose the effective and innovative transfer and utilization of existing knowledge and best practice in the field of aging.

Part III. Preapplication Process

A. Eligible Applicants

In general, any State, public or nonprofit organization or agency may submit a preapplication under this announcement. This includes, but is not limited to: State Administering Agencies or Developmental Disabilities Basic State Grant Programs, Protection and Advocacy Offices, State and Area Agencies on Aging, Indian Tribes, Alaskan Native and other Native American organizations, and Social Services Block Grant State Agencies. Some of the specific priority areas or topics included in this announcement may have more restrictive eligibiliity requirements (for example, only State and area agencies on aging may be eligible to apply). Where this is the case, the eligible entities are specified in the priority area or topic description. Preapplications jointly developed by State, local and community-based social services agencies, foundations or universities are encouraged in order to promote comprehensive social services programs. "For-profit" organizations are eligible applicants for projects funded under authority of the Head Start Act, Native Americans Program Act and, in limited cases, the Older Americans Act. They may also participate as contractors under a grant to eligible applicants on all projects.

B. Available Funds

The Office of Human Development Services expects to award approximately $29,500,000 in the third and fourth quarters of FY 1984 (dependent on the availability of funds and appropriation by Congress) for new grants and cooperative agreements. Subject to Congressional action on the FY 1985 budget, HDS may also award a limited number of grants under this announcement in the first and second quarters of FY 1985. Appropriate HDS discretionary funding authorities will be used to fund projects, and more than one authority may be used to fund some projects.

The funding estimated to be available from each authority is summarized below. Applicants should take into account the proportion of funds available under each authority in designing their projects.

FUNDING SUMMARY

Program	Estimated Availability of FY 1984 Funds
Administration on Aging	$5,500,000
ACYF/Child Abuse and Neglect	7,000,000
ACYF/Adoption Opportunities	1,500,000
ACYF/Child Welfare	5,000,000
ACYF/Runaway Youth	3,800,000
ACYF/Head Start	2,500,000
Administration on Developmental Disabilities	1,500,000
Administration for Native Americans	700,000
HDS/Social Services Research	2,000,000
Total	29,500,000

HDS expects to make approximately 200 new awards pursuant to this announcement. These awards are expected to range from $50,000 to a maximum of $150,000 per year, with the average award expected to be $100,000. Actual awards may vary widely and eligible applicants requiring smaller awards are encouraged to apply.

Projects will be supported for periods up to seventeen months. However, projects of less than 12 months may also apply. *As stated earlier, applicants should be aware that HDS receives 3,000 to 6,000 preapplications annually to its Coordinated Discretionary Funds Program. Of these, 150 to 200 applicants receive grant awards.*

C. Granteee Share of the Project

At least 25% of the total cost of proposed projects must come from a source other than the Federal government (one dollar match for every three requested from HDS) except: (1) in the case of projects funded under the Native Americans Act Authority, where the grantee match must be 20% of the total cost of the proposed project; and (2) applicants who already have an institutional cost sharing agreement with HHS. The non-Federal share of project costs may be in the form of grantee-incurred costs or third party in-kind contributions. HDS strongly encourages preapplications where the grantee share is more than 25% of the project costs or the applicant proposes to match—partially or fully—HDS grants with cash contributions from other non-Federal funding sources.

D. Preapplication Process

Organizations wishing to compete for grants under this announcement must submit a preapplication by December 6, 1983. Preapplications received in response to this announcement will be reviewed by HDS staff and non-Federal experts. It is expected that successful preapplications will be invited to submit final applications in early spring to compete for funding scheduled for the third and fourth quarters of FY 1984 and the first and second quarters of FY 1985.

1. *Availability of Forms:* Preapplications for grants under the HDS Coordinated Discretionary Funds Program must be submitted on standard forms provided for that purpose. For your convenience, copies of those forms as well as detailed guidance materials for use in preparing the preapplication are included in Part IV of this announcement.

Additional copies of this announcement may be obtained by writing to: HDS/Division of Research and Demonstration, 200 Independence Avenue, S.W., Room 732E, Washington, D.C. 20201. Telephone: (202) 245-6235.

2. *Preapplication Submission:* One signed original and a minimum of two copies of the preapplication must be submitted to: HDS/Division of Grants and Contracts Management, 330 Independence Avenue, S.W., Room 1740, Washington, D.C. 20201. Attention HDS-84.

Submittal of five additional copies would expedite processing. There is no penalty for not submitting these additional copies.

3. *Notification Under Executive Order 12372:* This program is covered under Executive Order 12372 "Intergovernmental Review of Federal Programs" and 45 CFR Part 100 "Intergovernmental Review of Department of Health and Human Services Programs and Activities." State processes or directly affected State, areawide, regional and local officials and entities have sixty (60) days starting from the application deadline to comment on applications for financial assistance under this program. Applicants should contact their State Single Point of Contact or State Process as soon as possible to alert them of the prospective application and receive instructions regarding the process. (The Department will notify the State of any application received which has no indication that the State process had an opportunity to review it.)

A list of the State Single Points of Contact is included at the end of this announcement.

4. *Preapplication Consideration:* Complete preapplications that conform to the requirements of this Program Announcement will be reviewed competitively and evaluated by Federal officials and qualified persons outside of the Federal government. The results of the review will assist the Assistant Secretary and Program Commissioners in considering competing preapplications. This consideration may

also take into account comments from Federal Regional and Headquarters program staff offices. In addition, comments may be requested from appropriate specialists and constituents inside and outside of the Federal government.

The Assistant Secretary for Human Development Services, Program Commissioners and other members of the HDS Executive Staff will determine the action to be taken on each preapplication, and will make the decision whether to request a final application. (The Older Americans Act places certain responsibilities upon, and authority in, the Commissioner on Aging which affects the role of the Administration on Aging in implementing this program announcement. All such requirements will be met through actions which conform to the mandates of the Act.)

The official award document is the Notice of Financial Assistance Awarded, which sets forth in writing to the recipient the amount of funds awarded, the purpose of the award, other terms and conditions of the award, the effective date of the award, the budget period for which support is given, the total project period for which support is contemplated, and the total recipient participation.

HDS reserves the option of discussing preapplications with, or referring them to, other Federal or non-Federal funding sources when this is determined to be in the best interest of the Federal Government or the applicant.

5. *Funding Limitations on Indirect Costs:* Preapplicants should be aware that for training projects there is a limitation of 8 percent on indirect costs.

E. Special Considerations for Funding

Within the limits of available Federal funds, Human Development Services Executive Staff make financial assistance awards consistent with the purposes of the statutory authorities governing the HDS Discretionary Funds Program and this announcement.

Preference will be given to projects that propose the innovative use of volunteers. To the extent possible, final decisions will reflect the equitable distribution of assistance among the States, geographical areas of the nation, and rural and urban areas.

F. Criteria for Screening and Review.

All preapplications that meet the deadline will be screened to determine completeness and conformity to the requirements of this announcement. Complete, conforming preapplications will then be reviewed and evaluated competitively.

1. *Screening Requirements:* In order for a preapplication to be in conformance, it must meet *all* of the following requirements:

(a) *Number of copies:* An original signed preapplication and two copies must be submitted.

(b) *Length:* The narrative portion of the preapplication *must not exceed ten double-spaced pages* (or five single-spaced pages) typerwritten on one side of the paper only. The capability statement must not exceed two double-spaced or one single-spaced typewritten pages.

(c) *Standard Form 424:* The preapplication must include an SF 424, completed according to instructions.

(d) *Multiple Submittals:* A project can only be proposed once under this announcement. Multiple submittals of the same—or essentially the same—project as preapplications under different priority areas will be deemed nonconforming.

(e) *Eligibility:* The applicant must be an eligible entity as defined in the announcement.

(f) *HDS' Priorities:* The concept or project embodied in the preapplication must specifically address a priority stated in the announcement.

(g) *HDS Populations:* The preapplication must clearly target one or more HDS populations: the elderly; children, youth and families; Native Americans; the poor; and the developmentally disabled and/or the mentally retarded.

(h) *Non-Federal Contribution:* A non-Federal contribution of at least 25% of the total project costs must be proposed, except in the case of projects funded under the Native Americans Act Authority, or in the case of organizations that have an existing cost sharing agreement with HHS.

(i) *Cost:* Proposed projects requesting over $200,000 will be deemed nonconforming.

Preapplications must meet *all* of the above requirements to be considered. Noncomforming preapplicants will not be allowed to correct deficiencies or resubmit amended preapplications.

2. *Review Criteria:* Preapplications which are determined to be in conformance with the announcement will be reviewed by panels which may be composed of Federal staff, State/local staff, university and other non-government experts. Stage one will use the following criteria:

(a) Innovativeness: (40 points) The preapplication clearly proposes a *Significant improvement upon, or important departure from, existing practices and previous related work* in the field of human services (not only in the local area of the proposed project). The proposed project constitutes new activity and not merely a continuation or expansion of existing activity. The project proposed in the preapplication has the potential for achieving far/reaching impact through improvements that will be useful in a variety of settings beyond the project site.

(b) Outcomes: (30 points) The proposed project will result in a measurable, concrete reduction of a significant problem (a project should result, for example, in the actual employment of a specific number of youths, not just in counseling those youth on how to seek employment).

(c) Project Design: (10 points) The problem to be addressed is clearly stated. The preapplication has a concise but clear statement of goals, measurable objectives and project design or methodology. Problems, issues and methods are clearly related.

(d) Potential for Success: (10 points) The goals of the proposed project are realistic in terms of the methodology, staff and funds allocated to the activity. The applicant organization is capable of carrying out the project as proposed.

(e) Cost/Benefit: (10 points) The cost of the proposes project is commensurate with the specific outcomes of the project; the cost per unit of outcome (e.g., youth employed) is low. The extent to which other organizations are contributing funds for the project is clearly indicated.

After the preapplications are rated by the review panels using these criteria, the HDS Executive Staff will select those which will be invited to submit final applications.

3. *Evaluation Criteria:* In stage two (the final application stage) those preapplicants selected by the Executive Staff will be asked to submit final applications. Theses applications will be either administratively reviewed by HDS staff (in the case of a limited number of apreapplications of exceptional quality) or competitively reviewed by qualified groups of experts who are primarily from outside the Federal government. Acceptable applications must be complete and meet the following criteria:

(a) Criterion I: Technical Approach (25 Points).

- The applicant proposes a well-defined and carefully worked out technical approach (including problem or issue definition) that is, if well executed, capable of achieving the objectives of the project. The approach may include: research methodology, demonstration plan, design of training

programs or other appropriate techniques.

• Where appropriate, the applicant describes evaluation components. Evaluation, data collection and analysis procedures are geared to assess (using quantitative measures as much as possible) the degree to which intended objectives are achieved. The applicant clearly distinguishes the evaluation from activities designed primarily to give project staff feedback on their progress toward meeting project objectives.

(b) Criterion II: Beneficial Impact (25 Points).

• The knowledge, methods, or technology to be developed can be expected to impact beneficially on human service programs and target populations beyond the site at which the project is conducted. This includes generalizability of results for research, domonstrations, and evaluation projects.

(c) Criterion III: project Implementation Plan (20 Points).

• The application specifies a sound plan for task accomplishment and staff loading by task.

• The application contains a suitable plan for insuring the use of project results by appropriate users. The plan describes the kinds of reports and media to be used in transmitting final results to users and explains why this is expected to be an effective dissemination package that will reach and influence users.

(d) Criterion IV: Staffing and management (15 Points).

• The proposed staff are well-qualified to carry out the project.

• The division of responsibilities is appropriate to carry out project tasks, including sufficient time of senior staff to assure adequate management of the project.

• The applicant organization has adequate facilities, resources, and experience to conduct the project as proposed.

(e) Criterion V: Budget Appropriateness and Reasonableness (15 points).

• The proposed budget is commensurate with the level of effort needed to accomplish the project objectives. The cost of the project is reasonable in relation to the value of the anticipated results.

• The contribution of any collaborative agencies or organizations is assured in writing and included with the application when it is submitted. The participation of an agency other than the applicant, if critical to the proposed project, is evidenced by a letter indicating agreement to participate.

The author(s) for both the preapplication and the application should be clearly identified together with their current relationship to the applicant organization and any future project role they may have if the application is funded.

G. Closing Date for Receipt of Preapplications

The closing date for submittal of preapplications under priorities identified in this program announcement is December 6, 1983. Preapplications must be mailed or hand delivered to: HDS/Division of Grants and Contracts Management, 330 Independence Avenue, SW., Room 1740, Washington, D.C. 20201, Attention HDS-84.

Hand delivered preapplications are accepted during the normal working hours of 9:00 a.m. to 5:30 p.m., Monday through Friday. A preapplication will be considered to be submitted on time if:

1. The preapplication was sent by registered, certified or Express Mail no later than the closing date, as evidenced by a U.S. Postal Service or commercial delivery dated postmark, unless it arrives too late to be considered by independent reviewers. Applicants are advised to check with their post office to determine the availability of *dated* postmarks. (Private metered postmarks shall not be acceptable as proof of timely mailing), or;

2. The preapplication is received on or before the closing date by the Department of Health and Human Services in Washington, D.C. In establishing the date of receipt, consideration will be given to documentary evidence of receipt maintained by HHS.

Part IV: Instructions for Completing Preapplications

A. Preapplication Package

In order to expedite the processing of preapplications, we request that you follow the following instructions explicitly. Each preapplication package should include:

1. An original and a minimum of two additional copies of the preapplication (See Section B below). While an original and two copies are required, five additional copies would be useful to facilitate processing. No applicant will be penalized for submitting only the three required copies. Each copy should be stapled (back and front) in the upper left corner. The original copy of the preapplication must have original signatures.

In order to facilitate handling, please do not use covers, binders or tabs. Do not include extraneous materials such as agency promotion brochures, slides, tapes, film clips, etc. It is not feasible to use such items in the review process, and they will be discarded if included.

2. Three extra copies of Form 424 and three copies of the cover sheet/abstract stapled together apart from the copies of the preapplication.

3. Do not include a self-addressed, stamped acknowledgement card. All applicants will be automatically notified of receipt and of the identification number assigned to their preapplication. This number and the priority area must be referred to in *ALL* subsequent communication with HDS concerning the preapplication. If acknowledgement is not received within six weeks after the deadline date, please notify HDS by telephone (202) 245-6235.

Special note: After an identification number is assigned and the preapplicant has been notified of the number, preapplications are filed serially by identification number to aid in quick retrieval. It will not be possible for HDS staff to provide a timely response to inquiries about a specific preapplication unless this number and the priority area are given.

B. Content of Preapplication

Each copy of the preapplication *must* contain in the order listed, each of the following items:

1. Standard Form 424, page 1, completed according to the instructions listed below.

2. Cover sheet and abstract completed according to the instructions listed below.

3. Completed criteria index form.

4. Project narrative, *no more than ten pages long*, double-spaced and typewritten on one side only (or five pages single-spaced), completed according to instruction listed below.

5. Organizational capability statement or materials, *no more than two double-spaced typewritten pages long*. (See instructions below.)

C. Preparing the Preapplication

Preapplication forms (Standard Form 424, page 1, and Criteria Index Form) are reprinted below for your convenience. We suggest that you reproduce them and type your application on the copies.

Prepare your preapplication in accordance with the following instructions:

1. Instructions for Standard Form 424, page 1:

Complete item numbers 1-8, 13, 14, 17, 22 and 23 only.

Specific instructions are as follows:

Item 1. Mark "preapplication" box.

Item 2.a. Applicant's own control number, if desired.

Item 2.b. Date preapplication is submitted.

Item 3.a. Number if assigned by State clearinghouse or, if delegated by State, by areawide clearinghouse.

Item 3.b. Date applicant notified of clearinghouse identifier.

Items 4.a.–4.h. Legal name of applicant, name of primary organizational unit which will undertake the assistance activity, complete address of applicant, and name and telephone number of persons who can provide further information about this request.

Item 5. Employer identification number of applicant as assigned by Internal Revenue Service.

Item 6.a. Indicate "not available."

Item 6.b. Type: State "HDS FY 1984 Coordinaed Discretionary Funds Program" *and the number of the priority area under which the preapplication is being submitted.* If more than one priority area is listed, HDS will disregard all but the first one listed.

Item 7. The title should briefly and clearly describe the focus of the proposed project and be selected with public understanding of the value of the project in mind. Do not use acronyms, abbreviations or jargon. Avoid unnecessary phrases such as "A Study of * * *," "Research to * * *," "A Project * * *," etc. *Do not use more than 100 characters,* including punctuation and spaces betwen words. (Characters in excess of 100 will be lost during electronic data entry.)

Item 8. Self-explanatory, "City" includes town, township, or other municipality.

Item 13. Amount requested or to be contributed by each contributor. Include value of in-kind contributions.

Item 14.a. Enter the number of the congressional district where the applicant's principal office is loacted.

Item 14.b. Enter the number of the congressional district(s) where the project will be located.

Item 17. Estimated number of months to complete project after Federal funds are available.

Item 22. Self-explanatory. (b) Leave blank.

Item 23. Self-explanatory.

2. Instructions for the cover page and abstract: On plain white bond, type (single-spaced):

- Title of preapplication (exactly as entered in item 7 on Form 424).
- Name and address of applicant organization.
- Priority area under which the preapplication is submitted.
- Target population(s).
- Total project period and total amount requested.
- Proposed match (At least one dollar for every three requested from HDS) if you are in Indian Tribe or have an existing cost sharing agreement with HHS, *state so clearly here.*
- Project abstract summarizing, in 200 nontechnical words or less, the proposed project. The abstract should be so clearly written that the following questions could be answered by a member of the general public who reads it: What is the specific purpose of the project? How is the project to be conducted? What will be its concrete outcomes? What difference might the results make? To whom?
- The name of the author(s), their current relationship to the applicant and proposed project role.

3. Instructions for Criteria Index Form (see E. Below): Complete by typing on a separate sheet of paper every item in the criteria index form indicating the page and paragraph number where screening requirements and specific review criteria are addressed.

4. Instructions for project narrative:

Describe the project you propose in response to this announcement. Your narrative (10 pages typed double-spaced, or five pages typed single-spaced maximum, on 8½" x 11" plain white bond with 1" margins on both sides) should provide information on how the preapplication meets the review criteria. We strongly suggest that you follow these format and page limitations:

a. *Statement of Need for the Proposed Project* (2 pages maximum.) This portion of the preapplication should state the objectives of the project, including clear specification of the concrete outcome(s) expected of the project and the HDS populations targeted. In addition, this portion should document the need for and importance of the issues to be addressed beyond the local area of the project. It should also describe how the proposed project builds upon previous work and how it advances the state of knowledge from a national perspective.

b. *Results and Benefits Expected* (1 page maximum.) This portion of the program narrative should briefly summarize the anticipated results and delineate the benefits which are expected. Emphasis should be placed on outcomes as opposed to process measures. Projects should result, for example, in the employment of a specific number of people rather than just the training of people to increase employability.

c. *Approach.* Project Design (5 pages maximum.) This portion of the program narrative should describe specific plans for conducting the project. It should include relevant information about: (a) hypotheses to be tested (if appropriate); (b) data to be collected (including specification of data sources); (c) plan for data analysis; (d) what the project will do; and (e) who will do it.

d. *Utilization and Dissemination* (1 page maximum.) This portion of the narrative should address the project's responsibility to serve as a source of information to other agencies and/or researchers. This section should describe ways in which the project will share its experiences and findings with the field of human services in general and, specifically, with agencies or organizations capable of developing improved service delivery and management.

e. *Level of Effort.* (1 page maximum.) This part of the narrative should describe what staff, money, facilities and time would be required to complete the project as envisioned. Describe the resources needed to carry out the project. State the total Federal funds required to complete the project as proposed.

5. Organizational Capability Statement:

A brief (maximum 2 pages double-spaced or one page single-spaced) background description of how the applicant agency (or the particular division of a larger agency which will have responsibility for this project) is organized and the types and quantity of services it provides or research capabilities it possesses. Include descriptions of any current or previous relevant experience. Describe the competence of the project team and its demonstrated ability to produce a final product that is readily comprehensible and usable. The qualifications of key staff should be described in a few paragraphs rather than in formal vitae. Indicate clearly whether written commitments have been obtained from organizations that will be directly involved in the proposed project.

D. Check List of Preapplication Requirements

The following check list is provided for your convenience:

- ☐ SF 424, page 1, has been completed according to instructions (see sample SF 424).
- ☐ SF 424 has been signed and dated by an authorized official and original has been included in package to mail.
- ☐ Each preapplication has been stapled (no folders or binders) with a copy of the SF 424, page 1, as the first page of each copy.

Included in your preapplication package:

- ☐ One original preapplication plus seven copies. Each of the copies should include the following:
- ☐ SF 424, page 1;
- ☐ A cover page and abstract;
- ☐ A criteria index form;
- ☐ A narrative (10 pages, double spaced maximum);
- ☐ Organizational capability statement (2 pages, maximum)

Remember, preapplications must be postmarked or hand delivered (by 5:30 p.m.) no later than December 6, 1983 to: HDS/Division of Grants and Contracts Management, 330 Independence Avenue, S.W., Room 1740, Washington, D.C. 20201. Attention HDS–84.

E. Criteria Index Form

Complete every item in this criteria index form by typing on a separate sheet of paper every item listed and indicating the page and paragraph number where screening requirements and review criteria are addressed in the preapplication.

The criteria are described under Part III, F.

Criteria	Location in Preapplication
Screening Requirements:	
e. Eligibility	
f. HDS' Priorities	
g. HDS Populations	
h. Non-Federal Contribution	
i. Cost	
Review Criteria:	
a. Innovativeness	
b. Outcomes	
c. Project Design	
d. Potential for Success	
e. Cost/Benefit	

F. Points to Remember

- Designate your preapplication for one priority area and one priority area only.
- Although multiple preapplications (of different concepts) from the same applicant are not prohibited, they are not encouraged.
- You are required to send an original and two copies of a preapplication.

We would like to request that you send five additional copies to facilitate our review. However, there is no penalty for sending only three copies.

- In computing the required match for all projects except those funded under the Native Americans Act Authority, please note that 25% of the total project cost is equivalent to ⅓ of the amount requested from HDS. Thus for every 3 Federal dollars you request, you must match with an additional dollar. Miscomputation of the match is a common mistake that leads to disqualification. In order to compute the required minimum match, divide the amount you are requesting from HDS by 3.
- Preapplications containing narratives in excess of ten typewritten double-spaced pages or capability statements of more than two double-spaced pages will not be given further consideration.
- The distribution of topics related to specific HDS programs (e.g., AoA) is not necessarily commensurate with the distribution of discretionary funds among those programs.
- An abstract of 200 words or less is an essential element of the preapplication.
- Follow the recommended format as closely as possible in preparing the preapplication's narrative.
- The qualifications of key staff should be described in a few paragraphs rather than in formal vitae.
- Although letters of agreement (where appropriate) are required in final applications, it will suffice in the preapplication to state clearly in a paragraph that the necessary agreements have been obtained from those agencies whose participation is essential to the conduct of the proposed project.
- Applicants are strongly encouraged to have someone other than the writer apply the screening requirements and review criteria to the preapplication prior to its submittal. In this way, applicants will gain a sense of their preapplication's quality and potential competitiveness.
- Indirect costs of training grants may not exceed 8%.
- If selected to submit a full application, applicants should ensure that the Federal funds requested do not exceed what was requested in the preapplication. Disregard for this rule will result in an unfavorable review and may result in rejection of the application.

Dated: October 11, 1983.

Dorcas R. Hardy,

Assistant Secretary for Human Development Services.

Lucy Biggs,

Acting Commissioner, Administration for Children Youth and Families.

Jean K. Elder, Ph. D.,

Commissioner, Administration on Developmental Disabilities.

Lennie-Marie Tolliver, Ph. D.,

Commissioner, Administration on Aging.

Casimer Wichlacz,

Acting Commissioner, Administration for Native Americans.

BILLING CODE 4130-01-M

OMB Approval No. 29-R0218

FEDERAL ASSISTANCE

SECTION I—APPLICANT/RECIPIENT DATA

1. TYPE OF ACTION (Mark appropriate box)
- ☐ PREAPPLICATION
- ☐ APPLICATION
- ☐ NOTIFICATION OF INTENT (Opt.)
- ☐ REPORT OF FEDERAL ACTION

2. APPLICANT'S APPLICATION
a. NUMBER
b. DATE Year month day 19
Leave Blank

3. STATE APPLICATION IDENTIFIER
a. NUMBER
b. DATE ASSIGNED Year month day 19

4. LEGAL APPLICANT/RECIPIENT
a. Applicant Name :
b. Organization Unit :
c. Street/P.O. Box :
d. City : e. County :
f. State : g. ZIP Code:
h. Contact Person (Name & telephone No.) :

5. FEDERAL EMPLOYER IDENTIFICATION NO.

6. PROGRAM (From Federal Catalog)
a. NUMBER
b. TITLE

7. TITLE AND DESCRIPTION OF APPLICANT'S PROJECT

8. TYPE OF APPLICANT/RECIPIENT
A–State
B–Interstate
C–Substate District
D–County
E–City
F–School District
G–Special Purpose District
H–Community Action Agency
I–Higher Educational Institution
J–Indian Tribe
K–Other (Specify):
Enter appropriate letter ☐

9. TYPE OF ASSISTANCE
A–Basic Grant
B–Supplemental Grant
C–Loan
D–Insurance
E–Other
Enter appropriate letter(s) ☐☐

10. AREA OF PROJECT IMPACT (Names of cities, counties, States, etc.)

11. ESTIMATED NUMBER OF PERSONS BENEFITING

12. TYPE OF APPLICATION
A–New
B–Renewal
C–Revision
D–Continuation
E–Augmentation
Enter appropriate letter ☐

13. PROPOSED FUNDING

a. FEDERAL	$ .00
b. APPLICANT	.00
c. STATE	.00
d. LOCAL	.00
e. OTHER	.00
f. TOTAL	$ .00

14. CONGRESSIONAL DISTRICTS OF:
a. APPLICANT
b. PROJECT

15. TYPE OF CHANGE (For 12c or 12e)
A–Increase Dollars
B–Decrease Dollars
C–Increase Duration
D–Decrease Duration
E–Cancellation
F–Other (Specify):
Enter appropriate letter(s) ☐☐☐

16. PROJECT START DATE Year month day 19

17. PROJECT DURATION Months

18. ESTIMATED DATE TO BE SUBMITTED TO FEDERAL AGENCY ▶ Year month day 19

19. EXISTING FEDERAL IDENTIFICATION NUMBER

20. FEDERAL AGENCY TO RECEIVE REQUEST (Name, City, State, ZIP code)

21. REMARKS ADDED ☐ Yes ☐ No

SECTION II—CERTIFICATION

22. THE APPLICANT CERTIFIES THAT ▶
a. To the best of my knowledge and belief, data in this preapplication/application are true and correct, the document has been duly authorized by the governing body of the applicant and the applicant will comply with the attached assurances if the assistance is approved.
b. If required by OMB Circular A-95 this application was submitted, pursuant to instructions therein, to appropriate clearinghouses and all responses are attached:

	No response	Response attached
(1)	☐	☐
(2)	☐	☐
(3)	☐	☐

23. CERTIFYING REPRESENTATIVE
a. TYPED NAME AND TITLE
b. SIGNATURE
c. DATE SIGNED Year month day 19

SECTION III—FEDERAL AGENCY ACTION

24. AGENCY NAME

25. APPLICATION RECEIVED Year month day 19

26. ORGANIZATIONAL UNIT

27. ADMINISTRATIVE OFFICE

28. FEDERAL APPLICATION IDENTIFICATION

29. ADDRESS

30. FEDERAL GRANT IDENTIFICATION

31. ACTION TAKEN
- ☐ a. AWARDED
- ☐ b. REJECTED
- ☐ c. RETURNED FOR AMENDMENT
- ☐ d. DEFERRED
- ☐ e. WITHDRAWN

32. FUNDING

a. FEDERAL	$ .00
b. APPLICANT	.00
c. STATE	.00
d. LOCAL	.00
e. OTHER	.00
f. TOTAL	$ .00

33. ACTION DATE ▶ Year month day 19

34. STARTING DATE Year month day 19

35. CONTACT FOR ADDITIONAL INFORMATION (Name and telephone number)

36. ENDING DATE Year month day 19

37. REMARKS ADDED ☐ Yes ☐ No

38. FEDERAL AGENCY A-95 ACTION
a. In taking above action, any comments received from clearinghouses were considered. If agency response is due under provisions of Part 1, OMB Circular A-95, it has been or is being made.
b. FEDERAL AGENCY A-95 OFFICIAL (Name and telephone no.)

STANDARD FORM 424 PAGE 1 (10-75)
Prescribed by GSA, Federal Management Circular 74-7

Executive Order 12372—State Single Points of Contact

*Change since 11/82.

*Mr. William Wallace, Director, Dept. of Econ and Community Affairs, State Capitol, Montgomery, Alabama 36130—205/832-6400.

*Mr. Jay Hogan, Associate Director, Office of Management and Budget, Division of Governmental Coordination, Pouch AW, Juneau, Alaska 99811—907/465-3562.

*Sid Willbanks, Suite 412, 1515 Building, 1515 W. 7th St., Little Rock, Arkansas 72201—501/371-2345.

Mr. Larry Landry, Executive Director, Office of Economic Planning and Development, 4th Floor, Capitol Towers, Room 505, Phoenix, Arizona 85007—602/255-5371.

Mr. Kenneth Torp, Executive Director, Office of Planning and Budgeting, 102 State Capitol, Denver, Colorado 80203—303/866-2156.

*Mr. Huston Carlyle, Office of Planning and Research, 1400—10th Street #156, Sacramento, CA 95814—916/445-4831.

*Mr. Horace Brown, Acting Under Secretary, Office of Policy and Mgmt. Comprehensive Planning Division, 80 Washington Street, Hartford, Connecticut 06106—203/566-2555.

Ms. Marna C. Whittington, State Budget Director, Townsend Building, P.O. Box 1401, Dover, Delaware—302/736-4204.

Mr. Steve St. Amand, Office of Planning and Budgeting, Executive Office of the Governor, The Capitol, Tallahassee, Florida 32301—904/488-8114.

Mr. Irving Mitchell, Executive Assistant, State Capitol, Room 201, Atlanta, Georgia 30334—404/656-6870.

Mr. Frank Skrivanek, Deputy Director, Department of Planning and Economic Development, P.O. Box 2359, Honolulu, Hawaii 96804—808/548-4619.

Mr. Steven H. Woodall, CPA, Senior Controller, Division of Financial Management, State House, Boise, Idaho 83720—208/334-2881.

Mr. Richard McClure, Assistant to the Governor, 207 State Capitol, Springfield, Illinois 62706—217/782-9357.

Ms. Judith Palmer, Director, State Budget Agency, Room 212, State House, Indianapolis, Indiana 46204—317/232-5612.

Dr. Edward Stanek, Director, Office of Planning and Programming, 523 E. 12th, Des Moines, Iowa 50319—515/281-6483.

*Mr. Lynn Muchmore, Director, Office of the Budget, Department of Administration, 263 E. Street Capitol, Topeka, Kansas 66001—913/296-2436.

Mr. Bob Leonard, Manager, Kentucky State Clearinghouse, Department for Local Government, Second Floor, Capital Plaza Tower, Frankfort, Kentucky 40601—502/564-2382.

Mr. Wallace L. Walker, Executive Director, State Planning Office, Capitol Annex, P.O. Box 44426, Baton Rouge, Louisiana 70804—504/342-7410.

Mr. Richard Barringer, Director, State Planning Office, State House, August, Maine 14333—207/289-3261.

Ms. Constance Lieder, Secretary, Department of State Planning, 301 W. Preston Street, Baltimore, Maryland 21201—301/383-2450.

*Mr. Al Raine, Director, Governor's Office of Economic Development, State House, Room 109, Boston, Massachusetts 02202—617/727-1130.

*Mr. Phil Jourdan, Director, Department of Management and Budget, P.O. Box 30026, Lansing, Michigan 48909—517/373-1004.

Mr. Tom Harren, Department of Energy, Planning and Development, 101 Capitol Square, 550 Cedar Street, St. Paul, Minnesota 55101—612/296-3698.

Ms. Libby Smith, Governor's Office of Policy and Planning, 1304 Walter Sillers Building, Jackson, Missisippi 39202—601/354-7018.

Mr. Perry McGunniss, Director, Division of Budget and Planning, Office of Administration, State of Missouri, Jefferson, City, Missouri 65101—314/715-3925.

Ms. Cheryl S. Hutchinson, Administrative Assistant, Office of the Lieutenant Governor, Capitol Station, Helena, Montana 59620—406/449-3111.

Mr. Gary Krumland, Deputy Director, Policy Research Office, P.O. Box 94601, State Capitol, Lincoln, Nebraska 68509—402/471-2414.

Mr. Andrew Grose, Executive Assistant, Office of the Governor, State Capitol, Carson City, Nevada 89710—702/855-5670.

*Mr. David Neville, Office of State Planning, 2½ Beacon St., Concord, New Hampshire 03301—603/271-2155.

Mr. Kenneth Butko, Acting Director, Division of Planning, Department of Community Affairs, 240 W. State Street, 6th Floor, Trenton, New Jersey 08625—609/292-2953.

Ms. Denise Fort, Secretary for Administration, State Capitol #421, Santa Fe, New Mexico 87503—505/827-2073.

*Mr. Michael Finnerty, Director, Division of the Budget, State Capitol, Albany, New York 12224—518/474-3300.

Ms. Chrys Baggett, Director, State of Clearinghouse, N.C. Department of Administration, 116 West Jones Street, Raleigh, North Carolina 27611—919/733-7061.

Ms. Nancy Rockwell, Director, Federal Aid Coordinator's Office, Office of Management and Budget, 17th Floor, State Capitol, Bismarck, North Dakota 58505—701/224-2094.

Mr. Leonard Roberts, Deputy Director, Office of Management and Budget, Room 3931-L, State Office Tower, 30 E. Broad St., 39th Floor, Columbus, Ohio 43215—614/466-4363.

Ms. Cindy Rambo, Director, Department of Economic and Community Affairs, 4545 N. Lincoln Blvd., Oklahoma City, Oklahoma 73105—405/528-8200.

Mr. Robert Montgomery, Administrator, Intergovernmental Relations Division, 155 Cottage Street NE, Salem, Oregon 97310—503/378-2887.

Mr. Robert Benko, Governor's Office of Policy and Planning, Room 506, Finance Building, Harrisburg, Pennsylvania 17120—717/787-2086.

Mr. Alvin N. Johnson, Federal Coordinator, Governor's Office, Room 128, State House, Providence, Rhode Island 02903—401/277-2080.

Mr. Elmer Whitten, Office of Grants Services, Edgar A. Brown Building, 1205 Pendleton Street, Colombia, South Carolina 29211—803/758-2417.

Mr. Jeff Stroup, Commissioner, Bureau of International Relations, State Capitol Building, Pierre, South Dakots 57501—605/773-3661.

Mr. James R. Griggs, Director, State Planning Office, 1800 James K. Polk Building, 505 Deaderick Street, Nashville, Tennessee 37219—615/751-1676.

*Mr. Ed Grisham, Director, Budget and Planning Office, State Capitol, Austin, Texas 78711—512/475-8491.

Ms. Marthe Dyner, Director of State Planning, Room 116, State Capitol Building, Salt Lake City, Utah 84114—801/533-5245.

Ms. Carol Drake, Senoir Policy Analyst, State Planning Office, Montpelier, Vermont 05602—802/828-3226.

Mr. Robert H. Kirby, Department of Planning and Budget, Ninth Street Office Building, Room 424, Post Office Box 1422, Richmond, Virginia 23211—804/786-2463.

Ms. Karen Rahm, Director, Planning and Community Affairs, Agency, 9th & Colombia Building, Olympia, Washington 98504—206/753-2200.

Mr. Fred Cutlip, Director, Community Development Division, Governor's Office of Economic and Community Development, Building 6, Room B-553, State Capitol Complex, Charleston, West Virginia 25305—304/348-4010.

Mr. Craig Adams, Coordinator of Federal-State Relations, Division of Budget and Planning, Madison, Wisconsin 53702—608/266-2125.

Mr. Dick Hartman, State Planning Coordinator, Capitol Building, Cheyenne, Wyoming 82002—307/777-7574.

Mr. Peter Leon Guerrero, Special Assistant for Federal Programs, Office of the Lt. Governor, Guam State Clearinghouse, P.O. Box 2950, Agana, Guam 96910—671/472-8930.

*Ms. Sheila Borges, Director, Office of Federal Affairs, Office of the Governor, La Fortaleza, San Juan, Puerto Rico 00901—809/724-7900.

Mr. Manuel Sablan, Director, Planning and Budget, Office of the Governor, Saipan, Mariana Island 06950—7172.

[FR Doc. 83-28225 Filed 10-17-83; 8:45 am]

BILLING CODE 4130-01-M

federal register

Tuesday
October 18, 1983

Part VI

Department of the Interior

Bureau of Land Management

State Grants; Amendments to Alaska State Grant Regulations

DEPARTMENT OF THE INTERIOR

Bureau of Land Management

43 CFR Part 2620

State Grants; Amendments to Alaska State Grant Regulations

AGENCY: Bureau of Land Management, Interior.

ACTION: Proposed rulemaking.

SUMMARY: This proposed rulemaking would incorporate in the existing regulations changes in the selection and conveyance of lands under entitlements to the State of Alaska made by the provisions of the Alaska National Interest Lands Conservation Act.

DATE: Comments should be submitted by December 19, 1983.

Comments received or postmarked after the above cited date may not be considered in the decisionmaking process on the final rulemaking.

ADDRESS: Comments should be sent to: Director (140), Bureau of Land Management, 1800 C Street, NW., Washington, D.C. 20240.

Comments will be available for public review in Room 5555 of the above address during regular business hours (7:45 a.m. to 4:15 p.m.), Monday through Friday.

FOR FURTHER INFORMATION CONTACT:

Beaumont McClure (202) 343-6511

or

Robert C. Bruce (202) 343-8735.

SUPPLEMENTARY INFORMATION: The Alaska National Interest Lands Conservation Act (94) Stat. 2371) amended the Alaska Statehood Act to change the procedures for the selection and conveyance of public and national forest lands to which the State of Alaska is entitled for the development and expansion of communities and of public lands to which it is entitled for general purposes. The Alaska Lands Act further provides for full and final settlement of any and all claims for school lands by granting an additional lands entitlement to the State of Alaska and also provides for an extension of the State of Alaska's selection period to 1994.

The proposed rulemaking would revise subpart 2627 to incorporate the current requirements on selection and conveyance of the land entitlements of the State of Alaska as provided by the Alaska National Interest Lands Conservation Act. The proposed rulemaking would also increase the filing fee for each 5,760 acres, or fraction thereof, selected from the current $10 to $25 to more adequately over the cost of processing the applications.

It is hereby determined that this document is not a major Federal action significantly affecting the quality of the human environment and that no detailed statement pursuant to section 102(2)(C) of the National Environmental Policy Act of 1969 (42 U.S.C. 4332(2)(C)) is required.

The Department of the Interior has determined that this document is not a major rule under Executive Order 12291 and will not have a significant economic effect on a substantial number of small entities under the Regulatory Flexibility Act (5 U.S.C. 601 et seq.).

The State of Alaska has a total land entitlement of approximately 104.5 million acres under various grants. Total acreage selected by the State of Alaska currently exceeds that amount. The increase in the filing fee is needed to offset some of the costs of processing the applications and is not sufficient to qualify the proposed rulemaking as a major rulemaking.

The only entity affected by the proposed rulemaking is the State of Alaska which must file applications under the procedures set out in the regulations in order to receive its entitlement lands. Therefore, there are no small entities involved in this proposed rulemaking.

The information collection requirements contained in 43 CFR Part 2627 do not require approval of the Office of Management and Budget under 44 U.S.C. 3507 because there will be fewer than 10 respondents annually.

The principal author of this proposed rulemaking is Beaumont McClure, Alaska Programs Staff, assisted by the staff of the Office of Legislation and Regulatory Management, Bureau of Land Management.

List of Subjects in 43 CFR Part 2620

Alaska, Intergovernmental relations, Public lands—grants, Public lands—mineral resources.

Under the authority of the Alaska Statehood Act of 1958, as amended (48 U.S.C. prec. § 21) and as further amended by the Alaska National Interest Lands Conservation Act of 1980 (94 Stat. 2371), it is proposed to revise Subpart 2627 of Part 2620, Group 2600, Subchapter B, Chapter II of Title 43 of the Code of Federal Regulations as set forth below:

PART 2620—STATE GRANTS

Subpart 2627—Alaska

Sec.

2627.0-3 Authority.
2627.0-5 Definitions.
2627.1 Grant for community purposes.
2627.2 Grant for general purposes.
2627.3 Grant for school lands settlement.
2627.4 All Alaska grants.

Authority: Alaska Statehood Act of 1958 as amended, 48 U.S.C. prec. section 21; Alaska National Interest Lands Conservation Act of 1980, 94 Stat. 2371.

Subpart 2627—Alaska

§ 2627.0-3 Authority.

These regulations are issued under the authority of the Act of July 7, 1958, commonly known as the Alaska Statehood Act, as amended (48 U.S.C. prec. section 21), as further amended by the Alaska National Interest Lands Conservation Act of December 2, 1980 (94 Stat. 2371).

§ 2627.0-5 Definitions

As used in this subpart, the term:

(a) "Statehood Act" means the Act of July 7, 1958, commonly known as the Alaska Statehood Act, as amended (48 U.S.C. prec. section 21).

(b) "Alaska Lands Act" means the Alaska National Interest Lands Conservation Act of December 2, 1980 (94 State 2371).

(c) "Authorized officer' means any employee of the Bureau of Land Management who has been delegated the authority to perform the duties described in this subpart.

(d) "State" means the State of Alaska.

§ 2627.1 Grant for community purposes.

(a) Section 6(a) of the Statehood Act granted the State the right to select, within 35 years after January 3, 1959, not to exceed 400,000 acres of national forest lands in Alaska which are vacant and unappropriated, and not to exceed 400,000 acres of other public lands in Alaska which are vacant, unappropriated and unreserved at the time of their selection. The Statehood Act provided that the selected lands shall be adjacent to established communities or suitable for prospective community centers and recreational areas.

(b) (1) Except as provided in § 2627.4(c)(2)(iii)(B) of this title, the provisions of § 2627.4 of this title apply to the grant and selection of lands for community purposes.

(2) A selection application for community purposes shall specifically cite section 6(a) of the Act of July 7, 1958, as amended (72 Stat. 339, 340).

(3) Each tract selected shall contain at least 160 acres, with no boundary being less than ½ mile in length. Any deviation from the ½ mile boundary requirement shall be permitted only with the specific approval of the authorized officer or the authorized officer of the Department of Agriculture, as

appropriate. Selections containing more than 640 acres shall, to the extent practicable, be described in units of whole selections.

(c) Selection applications describing lands within national forests shall be accompanied by an approval from an authorized officer of the Department of Agriculture.

§ 2627.2 Grant for general purpose.

(a) Section 6(b) of the Statehood Act granted the State the right to select, within 35 years from January 3, 1959, not to exceed 102,550,000 acres from the public lands in Alaska which are vacant, unappropriated and unreserved at the time of their selection.

(b) (1) The provisions of § 2627.4 of this title apply to the grant and selection of lands for general purposes.

(2) A selection application for general purposes shall specifically cite section 6(b) of the Act of July 7, 1958, as amended (72 Stat. 339, 340).

(3) Each tract selected shall contain at least 5,760 acres, unless isolated from other lands available for selection.

(4) (i) The minimum tract selection size requirements in selections made after January 1, 1979, may be waived if the authorized officer determines that a reduced selection size would be in the national interest and would result in a better landownership pattern.

(ii) A waiver of the minimum tract selection size requirement shall be granted when the State, with agreement of an Alaska Native corporation, selects submerged lands under the provisions of section 901(e) of the Alaska Lands Act.

(5) Selections shall be made in units of whole sections as shown on the official survey plats of the Bureau of Land Management, including protraction diagrams, unless part of the section is unavailable or otherwise surveyed.

§ 2627.3 Grant for school lands settlement.

(a) Section 906(b) of the Alaska Lands Act granted the State the right to select, prior to January 4, 1994, not to exceed 75,000 acres of vacant, unappropriated and unreserved public lands in full and final settlement of any and all claims by the State to any right, title or interest in lands to which it was entitled under the Act of March 4, 1915 (38 Stat. 1214), which failed to vest as of January 3, 1959.

(b) (1) The provisions of § 2627.4 of this title apply to the grant and selection of lands for school purposes.

(2) A selection application for general purposes shall specifically cite section 906(b) of the Alaska National Interest Lands Conservation Act of December 2, 1980 (94 Stat. 2371, 2437–2438).

(3) Each tract selected shall contain at least 5,760 acres, unless isolated from other lands available for selection.

(4) (i) The minimum tract selection size requirements may be waived if the authorized officer determines that a reduced selection size would be in the national interest and would result in a better landownership pattern.

(ii) A waiver of the minimum tract selection size requirement shall be granted when the State, with agreement of an Alaska Native corporation, selects submerged lands under the provisions of section 901(e) of the Alaska Lands Act.

(5) Selection shall be made in units of whole sections as shown on the official survey plats of the Bureau of Land Management, including protraction diagrams, unless part of the section is unavailable or otherwise surveyed, or unless the Secretary of the Interior waives the whole section requirement.

§ 2627.4 All Alaska grants.

(a) (1) Applications for selection under the statutory authorities listed in § 2627.0–3 of this title shall be made by the proper selecting agent of the State and filed, in duplicate, in the proper Bureau of Land Management office identified in § 1821.2–1 of this title. No special form is required, but the selection application shall be typewritten and shall contain the following:

(i) Category of grant;

(ii) A reference to the authority for the specific grant under which the selection is filed;

(iii) A certificate of the selecting agent showing:

(A) The agent's official title and authority to make selections on behalf of the State;

(B) That the selection is made under and pursuant to the laws of the State;

(C) The acreage being selected and the cumulative acreage of all prior selections pending or conveyed under that grant;

(D) For selections filed after December 2, 1980, whether the selected acreage under that particular grant exceeds by more than 25 percent that portion of the State's entitlement which has not been tentatively approved or patented;

(E) All information relative to medicinal or hot springs or other waters upon the selected lands; and

(F) All information relative to deposits of oil shale or lands containing such deposits upon the selected lands.

(iv) (A) If the selected lands have been surveyed, the legal description of the lands in accordance with the official plats of survey;

(B) If the selected lands have not been surveyed, the legal description of the lands in accordance with the approved protraction diagrams of the rectangular system of survey; or

(C) If the selected lands are neither surveyed nor described by approved protraction diagrams, a metes and bounds description of the lands, together with a map sufficient to permit ready identification of the location, boundaries and area of the selected lands.

(2) A selection application or any amendment thereto, including an application filed pursuant to section 906(e) of the Alaska Lands Act, filed subsequent to the effective date of this paragraph shall be accompanied by a non-refundable filing fee of $25 for each 5,760 acres or fraction thereof.

(3) All selections shall be made in reasonably compact tracts, taking into account the situation and potential uses of the lands involved. A tract shall not be considered compact if it excludes other public lands or national forest lands available for selection within its exterior boundaries.

(4) Except for lands within any conservation system unit or the National Petroleum Reserve—Alaska, the State may file a selection application on lands which are not available for selection on the date of filing. Such a selection application, if otherwise valid, shall become an effective selection without further action by the State on the date the lands included in the application become available, regardless of whether the State's land selection rights have expired. Selection applications previously filed by the State may be amended so as to become subject to this provision. However, this provision shall not be construed to prevent the United States from transferring a Federal reservation or appropriation from one Federal agency to another for the use and benefit of the United States.

(5) The State may select lands exceeding by not more than 25 percent in total area the amount of State entitlement which has not been tentatively approved or patented under each grant. Should the State file a selection under any grant which causes the total acreage in pending selections for that grant to exceed the maximum overselection permitted, it shall relinguish sufficient acreage to eliminate the impermissible overselection acreage or submit with its selection application a statement which lists by serial number and land description, in blocks no larger than a township in size, those selection applications or portions thereof that are lowest in priority. Thereafter, as long as overselections are maintained, the State

shall furnish, by the last working day of the month, its list of lowest priority selection blocks for use during the succeeding month. Upon either the filing of a selection causing overselection under any grant to exceed the acreage permitted, where such selection is unaccompanied by appropriate relinquishment, or upon receipt by the State of subsequent tentative approvals or patents which reduce its remaining entitlement, the State shall, within 5 working days, relinquish sufficient acreage to maintain no more than the percentage of overselection permitted. If the State fails to relinquish, the authorized officer shall eliminate the impermissible overselection by rejecting selection blocks of the lowest priority, as identified by the State. If no priority has been identified by the State, the authorized officer shall reject the latest filed application(s) to maintain the permissible overselection level.

(b) (1) Upon the revocation of any withdrawal in Alaska, the public land order affecting such revocation shall provide for a period of not less than 90 days before the date on which the revocation otherwise becomes effective during which period the State shall have a preferred right of selection, except as against prior existing valid rights, equitable claims subject to allowance and confirmation and other preferred rights of application conferred by law.

(2) When the proper selecting agent of the State files, in writing, a waiver of the preference provisions of a proposed revocation of a withdrawal, the revocation shall not provide for preference right of selection.

(c) (1) Under the statutory authorities listed in § 2627.0–3 of this title, the State may select any vacant, unappropriated lands in national forests in Alaska in fulfillment of its forest community grant entitlement and any vacant, unappropriated and unreserved public lands in Alaska in fulfillment of its entitlements under the remaining statutory provisions, whether or not the lands are surveyed and whether or not the lands contain mineral deposits.

(2) For the purposes of State selection, the definition of lands available for selection includes:

(i) For selection applications filed on or after September 14, 1960, the retained or reserved interest of the United States in lands which have been disposed of with a reservation to the United States of all minerals or of any specific mineral or minerals;

(ii) Lands beneath tidelands filled by the United States prior to statehood and reserved to the United States on the date of statehood, and lands beneath navigable waters reserved to the United States on the date of statehood, upon revocation of existing withdrawals;

(iii) (A) Submerged lands beneath nonnavigable waters;

(B) For selections for general purposes under § 2627.2 of this title and as school lands under § 2627.3 of this title, submerged lands which are the subject of agreement under section 901(e)(1) of the Alaska Lands Act, or reconveyed to the United States under section 901(e)(2) of the Alaska Lands Act;

(iv) Lands available for selection under section 906(j) of the Alaska Lands Act.

(3) Except for lands subject to a contract, lease, license or permit under the Alaska Coal Leasing Act of 1914, as amended (48 U.S.C. 432 et seq.), or the Mineral Leasing Act of 1920, as amended and supplemented (30 U.S.C. 181 et seq.), the requirement of paragraph (c)(1) of this section that the lands be vacant, unappropriated or unreserved does not prohibit selection of lands under application for or subject to a contract, lease, license, permit, right-of-way or easement.

(d) (1) Selection applications filed by the State shall be subject to certain rights of Alaska Natives under the provisions of the Alaska Native Claims Settlement Act of December 18, 1971, as amended (43 U.S.C. 1601 et seq.).

(2) Any contract, lease, license or permit issued under the Alaska Coal Leasing Act of 1914, as amended (48 U.S.C. 432 et seq.), or under the Mineral Leasing Act of 1920, as amended and supplemented (30 U.S.C. 181 et seq.), shall have the effect of withdrawing the lands subject thereto from selection by the State unless the State filed an application to select such lands before January 3, 1969.

(3) Where the preference provisions of section 6(g) of the Statehood Act do not apply, a selection application describing lands covered by a prior filed entry or application under which equitable title and patent may be earned shall be rejected to the extent of the conflict when and if such prior filed entry or application is allowed.

(e) A selection application by the State under this subpart, when filed in the proper office of the Bureau of Land Management identified in § 1821.2–1 of this title, shall segregate the lands selected from all subsequent entries or applications under which equitable title and patent may be earned, including locations under the mining laws. Segregation shall automatically terminate unless the State publishes the first notice required by paragraph (f) of this section within 60 days of receipt of the authorized officer's direction to publish. Filing of a State selection shall not segregate the lands from subsequent applications for less than fee interest. Top filings under § 2627.4(a)(4) of this title shall not segregate the lands until the lands become available for selection.

(f) (1) When directed by the authorized officer, the State shall, in accordance with subpart 1824 of this title, publish once a week, for 5 consecutive weeks, at its own expense, in a designated newspaper and in a designated form, a notice affording all persons asserting adverse claims to the lands selected by the State an opportunity to file in the appropriate Bureau of Land Management office their objections to conveyance of the selected lands to the State. The State shall file an affidavit of the publisher, accompanied by a copy of the published notice showing that publication was accomplished for the required time.

(2) Anyone protesting the conveyance of the lands to the State shall file an objection to the proposed conveyance with the Bureau of Land Management office identified in the notice, serve the State with a copy of the objection and furnish evidence of such service to the Bureau of Land Management.

(g) The Secretary of the Interior has management authority over lands selected by the State prior to tentative approval. However, no contract shall be made or a lease, license, permit, right-of-way or easement granted on such lands without the prior concurrence of the State.

(h) Ninety percent of any proceeds derived from contracts, leases, licenses, permits, rights-of-way or easements on lands selected by the State on or after December 2, 1980, or from trespasses originating after the date of selection by the State shall be deposited in an escrow account and shall be held until the lands have been tentatively approved to the State. Proceeds from lands selected by and tentatively approved to the State shall be paid to the State as required by law. Proceeds from lands selected by the State but not tentatively approved, due to rejection or relinquishment, shall be paid as would have otherwise been required by law.

(i) (1) Following the selection of lands by the State, and where there is no legal bar to passage of title to the lands to the State, the authorized officer shall issue a decision tentatively approving the selection for patent. The tentative approval confirms that all right, title and interest of the United States in the lands described therein has vested in the State, except for the reservations, conditions and limitations affecting the selection, as set forth therein, which are

reserved to the United States in the tentative approval or to which the tentative approval is subject.

(2) All conveyances to the State shall be subject to valid existing rights and to certain Alaska Native rights under the Alaska Native Claims Settlement Act of December 18, 1971, as amended (43 U.S.C. 1601 et seq.)

(3) (i) Where the State has validly selected all the lands in a mineral lease, permit, license or contract, the tentative approval shall convey to the State all mineral deposits in the selected lands.

(ii) Where the State has selected only a portion of the lands subject to a mineral lease, permit, license or contract, the mineral or minerals subject to that lease, permit, license or contract shall be reserved to the United States, along with whatever other rights may be necessary to ensure the lessee's, permittee's, licensee's or contractee's rights, benefits and privileges under the lease, permit, license or contract. Title to those mineral deposits in the lands conveyed shall automatically vest in the State upon termination of the lease, permit, license or contract.

(4) (i) Prior to issuance of tentative approval of a selection(s) or a portion thereof, pending conflicting applications for contracts, leases, licenses, permits, rights-of-way or easements, including applications and offers for mineral leases other than preference right lease applications, shall be adjudicated and granted or rejected according to merit and applicable law. Rejection of a noncompetitive offer to lease filed under the Mineral Leasing Act of 1920, as amended and supplemented (30 U.S.C. 181 et seq.), issued by the Assistant Secretary of the Interior for Land and Water Resources shall constitute the final administrative action of the Department of the Interior.

(ii) (A) Where, prior to conveyance to the State, a right-of-way or easement has been reserved to or appropriated by the United States, or a contract, lease, license, permit, right-of-way or easement has been issued or granted for selected lands, the conveyance shall contain provisions making it subject to the right of the United States, or its contractee, lessee, licensee, permittee or grantee to the complete enjoyment of all rights, privileges and benefits previously given, reserved or appropriated.

(B) When tentative approval is given, the State shall succeed and become entitled to any and all interests of the United States in any such contract, lease, license, permit, right-of-way or easement, except those reserve to the United States in the tentative approval document.

(iii) (A) Where the lands tentatively approved to the State do not include all of the lands described in any issue or granted contract, lease, license, permit, right-of-way or easement, the administration of such contract, lease, license, permit, right-of-way or easement shall remain in the United States unless the agency responsible for administration waives such administration.

(B) The administration of rights-of-way or easements reserved to the United States in the tentative approval shall be in the United States, including the right to grant an interest in such right-of-way or easement in whole or in part.

(j) The authorized officer shall issue a patent for each selection tentatively approved under the authorities listed in § 2627.0-3 of this title only after the exterior boundaries of the selected area(s) have been officially surveyed; or, if the State elects to receive patent to any selected lands on the basis of protraction surveys, such patent shall be issued on that basis within 6 months after notice of such election provided that there are no adverse claims of record.

(k) Selection applications for lands which are in the area north and west of the line described in section 10 of the Statehood Act shall have the approval of the President, or his/her designated representative, before the lands shall be conveyed to the State, except for those specified in the list entitled, "Prior State of Alaska Selections to be Conveyed by Congress," dated July 24, 1978, and the list entitled, "State Selection Lands May 15, 1978," dated July 24, 1978.

(l) The State may, by written notification, relinquish all right, title and interest to any selection prior to receipt of tentative approval, except that the lands shown on the list entitled, "State Selection Lands May 15, 1978," dated July 24, 1978, and specifically conveyed under section 906(g) of the Alaska Lands Act, may not be relinquished.

September 20, 1983.

Harold W. Furman II,

Acting Assistant Secretary of the Interior.

[FR Doc. 83-28316 Filed 10-17-83; 8:45 am]

BILLING CODE 4310-84-M

federal register

Tuesday
October 18, 1983

Part VII

Department of Energy

Federal Energy Regulatory Commission

Determinations by Jurisdictional Agencies Under Natural Gas Policy Act of 1978

DEPARTMENT OF ENERGY

Federal Energy Regulatory Commission

[Volume 983]

Determinations by Jurisdictional Agencies Under the Natural Gas Policy Act of 1978

Issued: October 12, 1983.

The following notices of determination were received from the indicated jurisdictional agencies by the Federal Energy Regulatory Commission pursuant to the Natural Gas Policy Act of 1978 and 18 CFR 274.104. Negative determinations are indicated by a "D" before the section code. Estimated annual production (PROD) is in million cubic feet (MMCF).

The applications for determination are available for inspection except to the extent such material is confidential under 18 CFR 275.206, at the Commission's Division of Public Information, Room 1000, 825 North Capitol St., Washington, D.C. Persons objecting to any of these determinations may, in accordance with 18 CFR 275.203 and 275.204, file a protest with the Commission within fifteen days after publication of notice in the **Federal Register.**

Source data from the Form 121 for this and all previous notices is available on magnetic tape from the National Technical Information Service (NTIS). For information, contact Stuart Weisman (NTIS) at (703) 487–4808, 5285 Port Royal Rd, Springfield, Va 22161.

Categories within each NGPA section are indicated by the following codes:

Section 102–1: New OCS lease
102–2: New well (2.5 Mile rule)
102–3: New well (1000 Ft rule)
102–4: New onshore reservoir
102–5: New reservoir on old OCS lease

Section 107–DP: 15,000 feet or deeper
107–GB: Geopressured brine
107–CS: Coal Seams
107–DV: Devonian Shale
107–PE: Production enhancement
107–TF: New tight formation
107–RT: Recompletion tight formation

Section 108: Stripper well
108–SA: Seasonally affected
108–ER: Enhanced recovery
108–PB: Pressure buildup

Kenneth F. Plumb,
Secretary.

NOTICE OF DETERMINATIONS — VOLUME 983

ISSUED OCTOBER 12, 1983

JD NO	JA DKT	API NO	D	SEC(1)	SEC(2)	WELL NAME	FIELD NAME	PROD	PURCHASER
ALABAMA OIL & GAS BOARD									
-ENHANCED ENERGY RESOURCES				RECEIVED:	09/13/83	JA: AL			
8356555	6-30-8320PD	0112500000		107-CS		JIM WALTER RESOURCES #4 MINE		180.0	SOUTHERN NATURAL
MICHIGAN DEPARTMENT OF NATURAL RESOURCES									
-FINDERS OIL & GAS CO				RECEIVED:	09/15/83	JA: MI			
8356554		2105535529		102-4		SHUMSKY STATE BLAIR #1-13	BLAIR 13 26N-11W	73.0	CONSUMERS POWER C
MONTANA BOARD OF OIL & GAS CONSERVATION									
-CELSIUS ENERGY CO				RECEIVED:	09/23/83	JA: MT			
8356549	1-83-1	2510122263		103		BANKSON-STATE #2-26	OLD SHELBY GAS FIELD	177.0	MICHAEL L LETSON
-CROFT PETROLEUM CO				RECEIVED:	09/23/83	JA: MT			
8356552	1-83-4	2510121797		108		JOE TOMAYER #1	WILLOW RIDGE	4.8	MONTANA POWER CO
-MIDLANDS GAS CORPORATION				RECEIVED:	09/23/83	JA: MT			
8356553	1-83-2EH	2507121483		108		1160 HELLIE 1	WILDCAT	22.0	KN ENERGY INC
8356550	1-83-3	2507121853		102-2		1160 HELLIES 2	BOWDOIN	77.0	KN ENERGY INC
-MONTANA PACIFIC OIL & GAS CO				RECEIVED:	09/23/83	JA: MT			
8356551	6-83-92	2510105306		102-4		ADAMS #2 - T34N - R1W	KEVIN SUNBURST	300.0	OIL INTERNATIONAL
NEW YORK DEPARTMENT OF ENVIRONMENTAL CONSERVATION									
-BEREA OIL AND GAS CORPORATION				RECEIVED:	09/26/83	JA: NY			
8356657	4887	3101317963		102-2		CHARRINGTON CREEK INC UNIT #5	WILDCAT	12.0	COLUMBIA GAS TRAN
8356658	4885	3101317716		102-2		W JOSEPHSON #2	GERRY	12.0	COLUMBIA GAS TRAN
-BOUNTY OIL & GAS INC				RECEIVED:	09/26/83	JA: NY			
8356656	2809	3101316547		102-2		ALEXANDER #1	WILDCAT	0.0	COLUMBIA GAS TRAN
8356659	4786	3101317628		102-2	107-TF	BALL UNIT #1	WILDCAT	0.0	COLUMBIA GAS TRAN
8356646	4794	3101317681		102-2	107-TF	COVEY #1	BUSTI	0.0	COLUMBIA GAS TRAN
8356616	4819	3101316889		102-2	107-TF	E CARLSON #1	BUSTI	0.0	NATIONAL FUEL GAS
8356650	4863	3101317627		102-2	107-TF	FREDERES UNIT #1	WILDCAT	0.0	NATIONAL FUEL GAS
8356615	4812	3101317626		102-2	107-TF	G A CLARK UNIT #1	WILDCAT	0.0	NATIONAL FUEL GAS
8356647	4797	3101316347		102-2	107-TF	LAKE ERIE BEAGLE CLUB #2	BUSTI	0.0	COLUMBIA GAS TRAN
8356649	4865	3101317969		102-2	107-TF	MORRISON #2	WILDCAT	0.0	NATIONAL FUEL GAS
8356645	4792	3101317987		102-2	107-TF	R RUTH UNIT #1	BUSTI	0.0	COLUMBIA GAS TRAN
8356653	4837	3101317168		102-2	107-TF	SPONTANEO UNIT #1	WILDCAT	0.0	NATIONAL FUEL GAS
8356612	4888	3101317970		102-2	107-TF	SWEENEY SR UNIT #2	BUSTI	0.0	COLUMBIA GAS TRAN
8356648	4867	3101317940		102-2	107-TF	TAYLOR #1	WILDCAT	0.0	NATIONAL FUEL GAS
8356651	4861	3101317629		102-2	107-TF	YOUNGBERG UNIT #1	WILDCAT	0.0	NATIONAL FUEL GAS
-CONSOLIDATED GAS SUPPLY CORPORATION				RECEIVED:	09/26/83	JA: NY			
8356632	4944	3109911708		108		GERALD C RIEGEL N-1459	FAYETTE	21.0	GENERAL SYSTEM PU
-DORAN & ASSOCIATES INC				RECEIVED:	09/26/83	JA: NY			
8356654	4835	3101317947		102-2	107-TF	A CARLSON UNIT #1 KV-46	CARROLL	30.0	COLUMBIA GAS TRAN
8356652	4855	3100917949		102-2	107-TF	E KUREK UNIT #2 KX-21	CONEWANGO	30.0	COLUMBIA GAS TRAN
8356644	4637	3101317876		102-2	107-TF	M RESLINK UNIT #1 KA-166	FRENCH CREEK	30.0	COLUMBIA GAS TRAN
-KEYSTONE ENERGY OIL & GAS PRODUCTIO				RECEIVED:	09/26/83	JA: NY			

BILLING CODE 6717-01-M

JD NO	JA DKT	API NO	D	SEC(1)	SEC(2)	WELL NAME	FIELD NAME	PROD	PURCHASER
8356636	5431	3100918077		103	107-TF	GARDINER #1	SKINNER HOLLOW	18.0	NATIONAL FUEL GAS
8356634	5427	3100916932		103	107-TF	JOCHUM #1	SKINNER HOLLOW	18.0	NATIONAL FUEL GAS
8356635	5429	3100918224		103	107-TF	KOPENSKI #1	SKINNER HOLLOW	18.0	NATIONAL FUEL GAS
8356637	5425	3100916926		103	107-TF	M JOHNSON #1	SKINNER HOLLOW	18.0	NATIONAL FUEL GAS
8356640	5439	3100918075		103	107-TF	M SALISBURY #1	SKINNER HOLLOW	18.0	NATIONAL FUEL GAS
8356642	5441	3100918076		103	107-TF	M SALISBURY #2	SKINNER HOLLOW	18.0	NATIONAL FUEL GAS
8356638	5437	3100918093		103	107-TF	P HEBNER #1	SKINNER HOLLOW	18.0	NATIONAL FUEL GAS
8356639	5433	3100918114		103	107-TF	R JOHNSON #1	SKINNER HOLLOW	18.0	NATIONAL FUEL GAS
-S & M RESOURCES INC				RECEIVED:	09/26/83	JA: NY			
8356617	4660	3101317898		102-2	107-TF	JEAN K WIGGERS #1		0.0	COLUMBIA GAS TRAN
-TEMPLETON ENERGY INC				RECEIVED:	09/26/83	JA: NY			
8356623	5421	3101311309		108		A JOPEK - #1202	LAKESHORE	5.6	NATIONAL FUEL GAS
8356624	5420	3101311469		108		CHRISTY FARMS #1 - #1222	LAKESHORE	4.9	NATIONAL FUEL GAS
8356620	5424	3101310660		108		CLIFFSTAR-STANTON - #1152	LAKESHORE	4.1	NATIONAL FUEL GAS
8356622	5422	3101310888		108		DRAGGETT - #1170	LAKESHORE	1.1	NATIONAL FUEL GAS
8356625	5419	3101311686		108		E & M HEALD #1 #1273	LAKESHORE	9.6	NATIONAL FUEL GAS
8356631	5415	3102914334		108		GERHARDT - #1439	LAKESHORE	0.4	NATIONAL FUEL GAS
8356629	5414	3102914335		108		KURKE #1 - #1440	LAKESHORE	0.8	NATIONAL FUEL GAS
8356628	5413	3102914336		108		KURKE #2 - #1441	LAKESHORE	0.8	NATIONAL FUEL GAS
8356626	5412	3102913099		108		LIPPERT - #1401	LAKESHORE	0.6	NATIONAL FUEL GAS
8356621	5423	3101310455		108		RUTKOWSKI - #1118	LAKESHORE	7.7	NATIONAL FUEL GAS
8356630	5417	3102912290		108		W & V NUDD - #1383	LAKESHORE	3.5	NATIONAL FUEL GAS
8356627	5418	3101312677		108		WILKOSZ - #1460	LAKESHORE	7.9	NATIONAL FUEL GAS
-TRAHAN PETROLEUM INC				RECEIVED:	09/26/83	JA: NY			
8356619	5445	3101318241		107-TF		ABBEY #1 #31-013-18241	ELLINGTON	36.0	COLUMBIA GAS TRAN
8356618	5443	3101318216		107-TF		ABBEY #2 #31-013-18216	ELLINGTON	36.0	COLUMBIA GAS TRAN
8356614	4809	3101317822		102-2	107-TF	NOBLES #2 31-013-17822	CHERRY CREEK	36.0	COLUMBIA GAS TRAN
8356655	4807	3101312510		102-2	107-TF	SMALLBACK NY 38 31-013-12510	CHERRY CREEK	36.0	COLUMBIA GAS TRAN
8356613	4805	3101317880		102-2	107-TF	SMALLBACK NY 82 31-013-17880	CHERRY CREEK	36.0	COLUMBIA GAS TRAN
8356641	5450	3101318319		107-TF		STEWARD #1 #31-013-13819	ELLINGTON	36.0	COLUMBIA GAS TRAN
8356643	5447	3101318357		107-TF		WEHRENBERG #5 #31-013-18357	ELLINGTON	36.0	COLUMBIA GAS TRAN
-VILLAFRANK JOSEPH				RECEIVED:	09/26/83	JA: NY			
8356633	5453	3101314780		108		FARVER 2 METER #869-CQ-MS-94X	LAKE SHORE	10.7	NATIONAL FUEL GAS
**********									
OKLAHOMA CORPORATION COMMISSION									
**********									
-BEASLEY OIL CO				RECEIVED:	09/23/83	JA: OK			
8356673	19392	3504722814		102-4		MARVIN #1	NORTH ENID	200.0	ARKANSAS LOUISIAN
-CITIES SERVICE OIL & GAS CORP				RECEIVED:	09/23/83	JA: OK			
8356663	23791	3513920675		108		MURDOCK A #16	MOUSER	10.5	PANHANDLE EASTERN
-DAVIS OIL COMPANY				RECEIVED:	09/23/83	JA: OK			
8356662	23624	3508720861		103		RAY BROOKS #2	WALNUT CREEK	0.0	LONE STAR GAS CO
-DEMINEX US OIL COMPANY				RECEIVED:	09/23/83	JA: OK			
8356682	19801	3510300000		102-4		BOOTEN #5	MIDDLE ORLANDO UNIT	100.0	
-F HOWARD WALSH JR				RECEIVED:	09/23/83	JA: OK			
8356675	21398	3505121348		102-3		HIBBERT #1		37.0	TRANSOK PIPE LINE
8356676	21397	3505121309		102-3		WALTERS #1		55.0	TRANSOK PIPE LINE
-FUNK EXPLORATION INC				RECEIVED:	09/23/83	JA: OK			
8356679	21222	3500722225		102-4		DOUBLE CHECK #1		0.0	NATURAL GAS PIPEL
-HAWKINS OIL & GAS INC				RECEIVED:	09/23/83	JA: OK			
8356674	19345	3500722308		102-4		WEST #1-17	ALLEN & PARKER	73.0	NORTHERN NATURAL
-JONES BOYD E				RECEIVED:	09/23/83	JA: OK			
8356678	21376	3593724223		102-2		IRELAN #1 35-937-24223		14.6	PHILLIPS PETROLEU
8356677	21377	3503723981		102-2		JACKSON #1 35-037-23981		105.8	PHILLIPS PETROLEU
-LEAR PETROLEUM CORPORATION				RECEIVED:	09/23/83	JA: OK			
8356683	19765	3500720154		108		BARBY #1	LAVERNE	0.0	RAEL GAS CO
-MARION CORPORATION				RECEIVED:	09/23/83	JA: OK			
8356680	20029	3514721811		102-2		BLEVINS #M-1	NORTH LEG	18.0	NORTHWEST CENTRAL
-PETROLEUM RESOURCES CO				RECEIVED:	09/23/83	JA: OK			
8356669	19757	3500320956		102-4		STEIN #2-20	SOUTHWEST CHEROKEE	275.0	AMINOIL USA INC
-PSEC INC				RECEIVED:	09/23/83	JA: OK			
8356670	19556	3508121500		107-TF		BRYAN-BOLIN #1-25		0.0	EL PASO NATURAL G
8356665	14963	3508121201		107-TF		CONNELLY #1-22		0.0	EL PASO NATURAL G
8356671	19554	3508121521		107-TF		EXXON #1-36		0.0	EL PASO NATURAL G
8356666	14962	3508121055		107-TF		JANES #1		0.0	EL PASO NATURAL G
8356667	14961	3508100000		107-PE		LOWERY #1-35		0.0	EL PASO NATURAL G
8356668	14960	3508121192		107-TF		PAYNE UNIT #1-27		0.0	EL PASO NATURAL G
8356672	19553	3508121540		107-TF		SITTON #1-23		0.0	EL PASO NATURAL G
8356685	14965	3508121237		107-TF		WHITTAKER #1-22		0.0	EL PASO NATURAL G
-RH OPERATING CO				RECEIVED:	09/23/83	JA: OK			
8356664	23796	3503520545		108		WILLIAMS #15-2	NORTH CRAIG FIELD	60.0	TRANS-GAS CO
-RICHARD W THOMPSON INC				RECEIVED:	09/23/83	JA: OK			
8356681	19805	3508322115		102-4		O BRYAN #1	LAKE GUTHRIE SOUTH	60.0	BUCKEYE NATURAL G
-TARGA OIL & GAS INC				RECEIVED:	09/23/83	JA: OK			
8356660	23490	3508121969		103		HOPKINS 1-31	DAVENPORT	90.0	NATURAL GAS ENTER
-TEXACO INC				RECEIVED:	09/23/83	JA: OK			
8356684	16569	3508520562		103		EDNA SADLER UNIT #2	ENVILLE SW	28.1	CIMARRON TRANSMIS
-TRINEHA INC				RECEIVED:	09/23/83	JA: OK			
8356661	23573	3502720748		103		BOWERMAN 1-4	WHEATLAND	127.8	MOBIL OIL CORP
**********									
WEST VIRGINIA DEPARTMENT OF MINES									
**********									
-APPCO OIL & GAS CORP				RECEIVED:	09/23/83	JA: WV			
8356570		4708505866		103		SEMMELMAN #1	GRANT	0.0	CONSOLIDATED GAS
8356557		4708505866		107-DV		SEMMELMAN #1	GRANT	0.0	CONSOLIDATED GAS
-ATLAS ENERGY INC				RECEIVED:	09/23/83	JA: WV			
8356577		4704700474		108		NORFOLK & WESTERN RAILROAD #1	SANDY RIVER DISTRICT	0.0	CABOT CORP
8356578		4704700511		108		W T VANCE #1	SANDY RIVER DISTRICT	17.1	CABOT CORP
-BLAUSER WELL SERVICE INC				RECEIVED:	09/23/83	JA: WV			
8356580		4702123412		108		ANNE L LORENTZ & ELSIE ADAMS #1	CENTER	2.0	CARNEGIE NATURAL
8356581		4702122971		108		BETTY FELDMAN #1	TROY	2.0	EQUITABLE GAS CO
8356579		4708523771		108		HENRY L BARKER #1	MURPHY	0.8	COLUMBIA GAS TRAN
8356587		4708523788		108		HENRY L BARKER #2	MURPHY	0.8	COLUMBIA GAS TRAN
8356584		4702122781		108		HUNTER BENNETT #1	CENTER	7.0	EQUITABLE GAS CO
8356583		4700721174		108		PARKERSBURG MILL CO #1	BIRCH	0.4	EQUITABLE GAS CO
8356586		4700721177		108		PARKERSBURG MILL CO #2	BIRCH	0.4	EQUITABLE GAS CO
8356582		4701722632		108		W BRENT MAXWELL #1-B	SOUTHWEST DISTRICT	0.4	EQUITABLE GAS CO
8356585		4701702633		108		W BRENT MAXWELL #2-B	SOUTHWEST DISTRICT	1.0	EQUITABLE GAS CO
-ENERGY UNLIMITED INC				RECEIVED:	09/23/83	JA: WV			
8356568		4708505546		107-DV		GOLDIN D-8	MURPHY DISTRICT	0.0	CONSOLIDATED GAS
8356575		4708505547		107-DV		GOLDIN F-8	MURPHY DISTRICT	0.0	CONSOLIDATED GAS
-HENRY O GOSSETT JR				RECEIVED:	09/23/83	JA: WV			
8356560		4702101252		108		BONNETT #1	GLENVILLE DISTRICT	6.0	EQUITABLE GAS CO
8356561		4702101299		108		BONNETT #2	GLENVILLE DISTRICT	3.3	EQUITABLE GAS CO

JD NO	JA DKT	API NO	D	SEC(1)	SEC(2)	WELL NAME	FIELD NAME	PROD	PURCHASER
8356564		4702101480		108		BUSH #1	GLENVILLE DISTRICT	3.3	EQUITABLE GAS CO
8356567		4701700830		108		CARR #1	GRANT DISTRICT	6.6	EQUITABLE GAS CO
8356562		4702101422		108		CARSON #1	TROY DISTRICT	3.2	EQUITABLE GAS CO
8356563		4702101463		108		CARSON #2	TROY DISTRICT	2.5	EQUITABLE GAS CO
8356559		4702101371		108		FITZPATRICK #1	GLENVILLE DISTRICT	3.3	EQUITABLE GAS CO
8356565		4702101477		108		FITZPATRICK #3	GLENVILLE DISTRICT	3.9	EQUITABLE GAS CO
8356566		4701700739		108		SMITH #1	GRANT DISTRICT	3.7	EQUITABLE GAS CO
-J & J ENTERPRISES INC				RECEIVED:	09/23/83	JA: WV			
8356576		4703302554		103		J-400	SARDIS	0.0	CONSOLIDATED GAS
-PENNZOIL COMPANY				RECEIVED:	09/23/83	JA: WV			
8356571		4701501598		108		J B CASTO #120	GRANNYS CREEK	3.1	CONSOLIDATED GAS
8356588		4701501450		108		J B CASTO #3793	GRANNYS CREEK	3.1	CONSOLIDATED GAS
8356589		4701501451		108		J B CASTO #3796	GRANNYS CREEK	3.1	CONSOLIDATED GAS
8356590		4701501361		108		J B CASTO #3815	GRANNYS CREEK	3.1	CONSOLIDATED GAS
8356591		4701501472		108		O D STOCKLEY #27	GRANNYS CREEK	1.3	CONSOLIDATED GAS
8356597		4701501473		108		O D STOCKLEY #28	GRANNYS CREEK	1.3	CONSOLIDATED GAS
8356595		4701501622		108		O. D STOCKLEY #3	GRANNYS CREEK	0.3	CONSOLIDATED GAS
8356593		4701501475		108		O D STOCKLEY #31	GRANNYS CREEK	1.3	CONSOLIDATED GAS
8356592		4701501490		108		O D STOCKLEY #52	GRANNYS CREEK	1.3	CONSOLIDATED GAS
8356596		4701501842		108		O D STOCKLEY #6	GRANNYS CREEK	0.3	CONSOLIDATED GAS
8356598		4701501238		108		O D STOCKLEY #91	GRANNYS CREEK	1.1	CONSOLIDATED GAS
8356594		4701500332		108		R R LOCKHART #1341	GRANNYS CREEK	2.1	CONSOLIDATED GAS
8356573		4701501381		108		R R LOCKHART #1747	GRANNYS CREEK	2.1	CONSOLIDATED GAS
8356574		4701501382		108		R R LOCKHART #1752	GRANNYS CREEK	2.1	CONSOLIDATED GAS
8356572		4701501388		108		R R LOCKHART #1754	GRANNYS CREEK	2.1	CONSOLIDATED GAS
-PRENCO				RECEIVED:	09/23/83	JA: WV			
8356556		4708505794		103		HODGE P-6	FLANAGAN	7.3	CONSOLIDATED GAS
8356569		4708505795		103		HODGE P-7	FLANAGAN	10.0	CONSOLIDATED GAS
-THE BENATTY CORPORATION				RECEIVED:	09/23/83	JA: WV			
8356558		4710700945		108		WESTBROOK #1	UNION DISTRICT	0.0	CONSOLIDATED GAS
-WHITNAM OIL & GAS CORP				RECEIVED:	09/23/83	JA: WV			
8356608		4708505141		107-DV		FELSENTHAL #1	RUTHERFORD FIELD	25.0	
8356600		4708505317		107-DV		L C ELDER #1	RUTHERFORD FIELD	25.0	
8356609		4708505152		107-DV		L C ELDER #2	RUTHERFORD FIELD	25.0	
8356606		4708505151		107-DV		M E ELDER #1	RUTHERFORD FIELD	25.0	
8356603		4708505185		107-DV		STEPHENS #1	RUTHERFORD FIELD	25.0	
8356601		4708505352		107-DV		STEPHENS #2	RUTHERFORD FIELD	25.0	
8356602		4708505353		107-DV		STEPHENS #3	RUTHERFORD FIELD	25.0	
8356605		4708505142		107-DV		V W TURNER #3	RUTHERFORD FIELD	25.0	
8356607		4710701185		107-DV		WHITNAM #1	RUTHERFORD	25.0	
8356611		4708505468		107-DV		WILSON #10	RUTHERFORD FIELD	25.0	
8356599		4708505277		107-DV		WILSON #2	RUTHERFORD FIELD	25.0	
8356604		4708505218		107-DV		WILSON #3	RUTHERFORD FIELD	25.0	
8356610		4708505385		107-DV		WILSON #8	RUTHERFORD FIELD	25.0	

[FR Doc. 83-28313 Filed 10-17-83; 8:45 am]

BILLING CODE 6717-01-C

[Volume 984]

Determinations by Jurisdictional Agencies Under the Natural Gas Policy Act of 1978

Issued: October 12, 1983.

The following notices of determination were received from the indicated jurisdictional agencies by the Federal Energy Regulatory Commission pursuant to the Natural Gas Policy Act of 1978 and 18 CFR 274.104. Negative determinations are indicated by a "D" before the section code. Estimated annual production (PROD) is in million cubic feet (MMCF).

The applications for determination are available for inspection except to the extent such material is confidential under 18 CFR 275.206, at the Commission's Division of Public Information, Room 1000, 825 North Capitol St., Washington, D.C. Persons objecting to any of these determinations may, in accordance with 18 CFR 275.203 and 275.204, file a protest with the Commission within fifteen days after publication of notice in the **Federal Register.**

Source data from the Form 121 for this and all previous notices is available on magnetic tape from the National Technical Information Service (NTIS). For information, contact Stuart Weisman (NTIS) at (703) 487-4808, 5285 Port Royal Rd., Springfield, Va. 22161.

Categories within each NGPA section are indicated by the following codes:

Section 102-1: New OCS lease
102-2: New well (2.5 Mile rule)
102-3: New well (1000 Ft rule)
102-4: New onshore reservoir
102-5: New reservoir on old OCS lease

Section 107-DP: 15,000 feet or deeper
107-GB: Geopressured brine
107-CS: Coal Seams
107-DV: Devonian Shale
107-PE: Production enhancement
107-TF: New tight formation
107-RT: Recompletion tight formation

Section 108: Stripper well
108-SA: Seasonally affected
108-ER: Enhanced recovery
108-PB: Pressure buildup

Kenneth F. Plumb,
Secretary.

NOTICE OF DETERMINATIONS VOLUME 984
ISSUED OCTOBER 12, 1983

JD NO	JA DKT	API NO	D	SEC(1)	SEC(2)	WELL NAME	FIELD NAME	PROD	PURCHASER
CALIFORNIA DEPARTMENT OF CONSERVATION									
-CHEVRON U S A INC				RECEIVED:	09/26/83	JA: CA			
8356917	83-5-0005	0403120243		102-2		SALYER 665X	TULARE LAKE	256.0	HUSKY OIL & GAS C
-NAHAMA & WEAGANT ENERGY CO				RECEIVED:	09/26/83	JA: CA			
8356937	83-4-0270	0402964094		102-4		CANADAY 2	ROSEDALE	30.0	GETTY OIL CO
8356938	83-4-0271	0402964952		102-4		CANADAY 3	ROSEDALE	24.0	GETTY OIL CO
8356936	83-4-0269	0402966340		102-4		COTTON GIN 1	ROSEDALE	7.0	GETTY OIL CO
8356935	83-4-0273	0402965858		102-4		ROSEDALE 1	ROSEDALE	30.0	GETTY OIL CO
-PETRO-LEWIS CORPORATION				RECEIVED:	09/26/83	JA: CA			
8356924	83-4-0248	0402968776		103		ELLIS 65K-19	SOUTH BELRIDGE	10.0	MOBIL OIL CORP
8356925	83-4-0249	0402968774		103		ELLIS 75J-19	SOUTH BELRIDGE	10.0	MOBIL OIL CORP
8356926	83-4-0250	0402968392		103		ELLIS 86K-19	SOUTH BELRIDGE	10.0	MOBIL OIL CORP
8356927	83-4-0251	0402968393		103		ELLIS 86L-19	SOUTH BELRIDGE	10.0	MOBIL OIL CORP
8356928	83-4-0252	0402968775		103		ELLIS 86M-19	SOUTH BELRIDGE	10.0	MOBIL OIL CORP
8356931	83-4-0239	0402968778		103		KING 67I-19	SOUTH BELRIDGE	10.0	MOBIL OIL CORP
8356930	83-4-0240	0402968780		103		KING 67J-19	SOUTH BELRIDGE	10.0	MOBIL OIL CORP
8356929	83-4-0241	0402968779		103		KING 67K-19	SOUTH BELRIDGE	10.0	MOBIL OIL CORP
8356918	83-4-0242	0402968628		103		KING 68D-19	SOUTH BELRIDGE	10.0	MOBIL OIL CORP
8356934	83-4-0236	0402968631		103		KING 71E-30	SOUTH BELRIDGE	10.0	MOBIL OIL CORP
8356933	83-4-0237	0402968630		103		KING 71F-30	SOUTH BELRIDGE	10.0	MOBIL OIL CORP
8356932	83-4-0238	0402968783		103		KING 71G-30	SOUTH BELRIDGE	10.0	MOBIL OIL CORP
8356919	83-4-0243	0402968394		103		KING 77K-19	SOUTH BELRIDGE	10.0	MOBIL OIL CORP
8356920	83-4-0244	0402968632		103		KING 78L-19	SOUTH BELRIDGE	10.0	MOBIL OIL CORP
8356921	83-4-0245	0402968629		103		KING 78M-19	SOUTH BELRIDGE	10.0	MOBIL OIL CORP
8356922	83-4-0246	0402968782		103		KING 78N-19	SOUTH BELRIDGE	10.0	MOBIL OIL CORP
8356923	83-4-0241	0402968396		103		KING 87L-19	SOUTH BELRIDGE	10.0	MOBIL OIL CORP
LOUISIANA OFFICE OF CONSERVATION									
-ARKLA EXPLORATION COMPANY				RECEIVED:	09/26/83	JA: LA			
8356916	83-0929	1711123969		103		FROST LUMBER COMPANY #28	MONROE	55.0	ARKANSAS LOUISIAN
-EADS EXPLORATION INC				RECEIVED:	09/26/83	JA: LA			
8356913	83-1227	1701725455		103		THIGPEN-HEROLD #1	GREENWOOD-WASKOM	200.0	ARKLA EXPLORATION
-GOLDKING PRODUCTION COMPANY				RECEIVED:	09/26/83	JA: LA			
8356912	83-1348	1701120532		103		SHERROD M JONES #1	EAST LONGVILLE	807.0	TRUNKLINE GAS CO
8356914	83-1226	1710121330		107-DP		WALKER DEV CO #1 PLAN RA SUH	BALDWIN	1346.0	UNITED GAS PIPELI
-PETRUS OPERATING CO INC				RECEIVED:	09/26/83	JA: LA			
8356915	83-1225	1700121233		107-DP		D MONCEAUX #1	PERRY POINT	0.0	MONTEREY PIPELINE
MONTANA BOARD OF OIL & GAS CONSERVATION									
-CROFT PETROLEUM CO				RECEIVED:	09/26/83	JA: MT			
8356911	1-83-5	2510121850		108		KEN TOMAYER #1	WILLOW RIDGE GAS	18.8	MONTANA POWER CO
-LUFF EXPLORATION CO				RECEIVED:	09/26/83	JA: MT			
8356909	1-83-8 A	2508321570		103		IVERSON 2-2	SOUTH OTIS CREEK	36.0	TRUE OIL CO
8356908	1-83-8	2508321618		102-2		LAWSON RANCH M-20	LAWSON RANCH	182.0	TRUE OIL CO
-MIDLANDS GAS CORPORATION				RECEIVED:	09/26/83	JA: MT			

BILLING CODE 6717-01-M

JD NO	JA DKT	API NO	D	SEC(1)	SEC(2)	WELL NAME	FIELD NAME	PROD	PURCHASER
8356907	1-83-9	2507121860		102-2		STATE 2 3670	BOWDOIN	77.0	KN ENERGY INC
-MONTANA PACIFIC OIL & GAS CO				RECEIVED:	09/26/83	JA: MT			
8356910	6-83-93	2510122280		102-4		STATE 16-5-A	KEVIN-SUNBURST	250.0	OIL INTERNATIONAL
**********									
NEW YORK DEPARTMENT OF ENVIRONMENTAL CONSERVATION									
**********									
-BEREA OIL AND GAS CORPORATION				RECEIVED:	09/26/83	JA: NY			
8356942	4869	3101318016		102-2	107-TF	E PERSONS UNIT #4	WILDCAT	14.0	COLUMBIA GAS TRAN
8356944	4790	3101316706		102-2		GROSS UNIT #3	GERRY	18.0	COLUMBIA GAS TRAN
-BOUNTY OIL & GAS INC				RECEIVED:	09/26/83	JA: NY			
8356945	4341	3101317023		102-2	107-TF	E NELSON UNIT #1	WILDCAT	0.0	NATIONAL FUEL GAS
8356943	2946	3101316023		102-2	107-TF	FORSBERG UNT #1	BUSTI	0.0	NATIONAL FUEL GAS
8356946	4713	3101317663		102-2	107-TF	R JOHNSON #1	BUSTI	0.0	COLUMBIA GAS TRAN
-GYPSUM ENERGY MANAGEMENT CO				RECEIVED:	09/26/83	JA: NY			
8356963	5388	3103717413		103	107-TF	BRZEZNIAK #1	HURON CREEK	0.4	U S GYPSUM CO
8356958	5386	3103717411		103	107-TF	GRAMBO #1	HURON CREEK	0.4	U S GYPSUM CO
8356957	5384	3103717418		103	107-TF	KLOSSNER #1	HURON CREEK	0.4	U S GYPSUM CO
8356962	5390	3103717414		103	107-TF	MEYER #1	HURON CREEK	0.4	U S GYPSUM CO
8356961	5392	3103717412		103	107-TF	SPIOTTA #2	HURON CREEK	0.4	U S GYPSUM CO
-KEYSTONE ENERGY OIL & GAS PRODUCTIO				RECEIVED:	09/26/83	JA: NY			
8356947	5404	3100917683		103	107-TF	B & B BOBSEINE #1	SKINNER HOLLOW	18.0	NATIONAL FUEL GAS
8356959	5406	3100916930		103	107-TF	E BRIDGES #1	SKINNER HOLLOW	18.0	NATIONAL FUEL GAS
8356948	5402	3100918115		103	107-TF	STUDLEY #1	SKINNER HOLLOW	18.0	NATIONAL FUEL GAS
-SUBSEA OIL & GAS INC				RECEIVED:	09/26/83	JA: NY			
8356960	5380	3102918390		103	107-TF	RADNER #1	ALDEN LANCASTER	12.0	NATIONAL FUEL GAS
-TEMPLETON ENERGY INC				RECEIVED:	09/26/83	JA: NY			
8356939	5352	3101311774		108		CIVILETTE - #1264	LAKESHORE	5.6	NATIONAL FUEL GAS
8356951	5345	3102914581		108		FOSS #3 - #1421	LAKESHORE	4.5	NATIONAL FUEL GAS
8356950	5344	3102914582		108		FOSS #4 - #1422	LAKESHORE	3.8	NATIONAL FUEL GAS
8356940	5351	3101311922		108		FREY - #1265	LAKESHORE	6.5	NATIONAL FUEL GAS
8356954	5348	3101311681		108		GRANT - #1262	LAKESHORE	12.7	NATIONAL FUEL GAS
8356956	5350	3101311808		108		GULLO - #1283	LAKESHORE	12.9	NATIONAL FUEL GAS
8356955	5349	3101311677		108		HENDERSON - #1257	LAKESHORE	8.2	NATIONAL FUEL GAS
8356952	5346	3101313629		108		MICHALSKE/EVERTS - #1255	LAKESHORE	4.9	NATIONAL FUEL GAS
8356953	5347	3101312214		108		SIEBERT - #1360	LAKESHORE	14.6	NATIONAL FUEL GAS
8356941	5353	3101311642		108		SMITH - #1251	LAKESHORE	6.3	NATIONAL FUEL GAS
8356949	5354	3101311471		108		WOODBURY - #1224 -	LAKESHORE	12.4	NATIONAL FUEL GAS
**********									
OKLAHOMA CORPORATION COMMISSION									
**********									
-A C RICHARDS				RECEIVED:	09/23/83	JA: OK			
8356730	12180	3504900000		108-ER		R S SHIRLEY #1	GOLDEN TREND	30.0	WARREN PETROLEUM
-ADCO OIL & GAS				RECEIVED:	09/23/83	JA: OK			
8356756	22125	3505520187		103		ANDY #1	SOUTH BLOOMINGTON	11.0	DAMSON OIL CORP
-ADOBE OIL & GAS CORPORATION				RECEIVED:	09/23/83	JA: OK			
8356781	21819	3508520542		102-3		OAKMAN #32-1A	VIOLA	146.0	AMINOIL USA INC
-ALPHA ENERGY CORP				RECEIVED:	09/23/83	JA: OK			
8356883	23654	3507323597		103		VIETH #1-26		0.0	CONOCO INC
-AMERICAN ENERGY CORP				RECEIVED:	09/23/83	JA: OK			
8356769	20839	3506320400		108		FARRELL #1	HILL TOP	0.0	HILL TOP INVESTME
-AMES OIL AND GAS CORP				RECEIVED:	09/23/83	JA: OK			
8356811	22212	3511721705		102-2		LYONS #14-3	PAWNEE "A"	23.4	COLORADO GAS COMP
-AN-SON CORPORATION				RECEIVED:	09/23/83	JA: OK			
8356874	23446	3508720860		103		CROCKETT #1-9		730.0	LONE STAR GAS CO
8356825	22230	3503920771		102-2		FLYNT #1-4	EAST HAMMON	131.4	
-ANADARKO LAND & EXPLORATION CO				RECEIVED:	09/23/83	JA: OK			
8356855	23639	3503920887		103		FRYMIRE #1-8	S E THOMAS	306.0	TRANSOK PIPELINE
8356847	23653	3501121804		103		SHANTZ #1-19	S E THOMAS	127.0	TRANSOK PIPELINE
-ANR PRODUCTION CO				RECEIVED:	09/23/83	JA: OK			
8356815	23744	3515321040		108		BORDEN #1-16	S W MUTUAL	17.0	MICHIGAN WISCONSI
8356862	23470	3513920955		108		HAMILTON #1	WEST DOMBEY	5.0	MICHIGAN WISCONSI
8356861	23469	3513920883		108		MENDENHALL #1	WEST DOMBEY	10.0	MICHIGAN WISCONSI
8356879	23467	3513920989		108		VAN HYNING #1	WEST DOMBEY	7.0	MICHIGAN WISCONSI
8356880	23468	3513921296		108		WEHMEIER #1-13	WEST DOMBEY	4.0	MICHIGAN WISCONSI
-ARCO OIL AND GAS COMPANY				RECEIVED:	09/23/83	JA: OK			
8356749	23735	3504723292		103		DICK-TOEDTMAN #6	SOONER TREND	36.5	UNION TEXAS PETRO
-ARKOMA GAS CO				RECEIVED:	09/23/83	JA: OK			
8356744	23281	3512100000		108		W J HILSEWECK #1-29-A	WEST SCIPIO	3.7	ARKANSAS LOUISIAN
-ATKINSON J V				RECEIVED:	09/23/83	JA: OK			
8356816	23752	3510500000		108		AUSTIN BILLUPS #2		16.0	REH INDUSTRIES IN
8356750	23755	3510525351		108		RAY ROBINSON #1		8.0	REH INDUSTRIES IN
-AVANTI ENERGY CORP				RECEIVED:	09/23/83	JA: OK			
8356695	21989	3512920824		102-2		BLOUNT #1-2	HAMMON NW	730.0	
-B-MAC PETROLEUM CO				RECEIVED:	09/23/83	JA: OK			
8356902	21933	3511233800		103		BERRYHILL #2	HENRYETTA	25.7	PHILLIPS PETROLEU
-BLAIK OIL COMPANY				RECEIVED:	09/23/83	JA: OK			
8356863	23473	3500320054		108		PERRY #1	SOONER TREND	16.0	AMINOIL USA INC
-BLUE QUAIL ENERGY INC				RECEIVED:	09/23/83	JA: OK			
8356764	23743	3501722475		103		BESSIE #1	W MUSTANG	720.0	PHILLIPS PETROLEU
-BOGERT OIL CO				RECEIVED:	09/23/83	JA: OK			
8356771	16629	3504722357		108-ER		AMY #1-4		0.3	ARKANSAS-LOUISIAN
8356817	23778	3508322243		103		NELLIE 1-29	SOONER TREND	127.0	CONOCO INC
8356805	23931	3507323765		103		YOUNG #1-8	SOONER TREND	300.0	PHILLIPS PETROLEU
-BRACKEN EXPLORATION CO				RECEIVED:	09/23/83	JA: OK			
8356829	22252	3504321615		102-2		DENSAL WILLIS 1-6		60.0	PHILLIPS PETROLEU
8356787	23250	3501121578		103		HEIRS OF BEHIND #1-20		102.0	PHILLIPS PETROLEU
-BRYANT PETROLEUM CORP				RECEIVED:	09/23/83	JA: OK			
8356746	23293	3511121616		108		BRUNER #1		2.5	PHILLIPS PETROLEU
8356745	23292	3511100000		108		STEWART #2		0.0	PHILLIPS PETROLEU
-BUNKER EXPLORATION CO				RECEIVED:	09/23/83	JA: OK			
8356804	22150	3504921878		102-4		G I FERGUSON #1-3	EOLA	115.0	SOHIO PETROLEUM C
-CHAMPLIN PETROLEUM COMPANY				RECEIVED:	09/23/83	JA: OK			
8356900	20923	3507300000		103		BOLLENBACH "A" #1	SOONER TREND	0.0	
8356901	21439	3504700000		103		REFINERY #2	ENID (MISSISSIPPI)	0.0	CHAMPLIN PETROLEU
-CLARK RESOURCES INC				RECEIVED:	09/23/83	JA: OK			
8356885	23665	3507323737		103		HOPKINS 11-1	SOONER TREND	81.0	CONOCO INC
8356812	22204	3507323696		102-4		KERR 18-1	SOONER TREND	180.0	WARREN PETROLEUM
-CONTINENTAL RESOURCES CORP				RECEIVED:	09/23/83	JA: OK			
8356849	23612	3509322499		103		LEROY WILLIAMS #1		0.0	PHILLIPS PETROLEU
-CORYELL PETROLEUM CO				RECEIVED:	09/23/83	JA: OK			
8356697	22041	3512120985		102-2		WAGNON #1	N RUSSELLVILLE	495.0	ARKANSAS LOUISIAN
-CROUCH PETROLEUM COMPANY				RECEIVED:	09/23/83	JA: OK			
8356732	19217	3509120502		103		BREWER #1	S E CHECOTAH	24.0	COLUMBIA GAS TRAN
-DAWN ENERGY CO				RECEIVED:	09/23/83	JA: OK			

JD NO	JA DKT	API NO	D	SEC(1)	SEC(2)	WELL NAME	FIELD NAME	PROD	PURCHASER
8356717	23424	3504521100		103		ART #1-31	MOCANE-LAVERNE	55.0	
-DECK EXPLORATION INC				RECEIVED:	09/23/83	JA: OK			
8356782	21906	3510525811		102-4		LUCUS #2	CALIF CRK	137.0	
8356783	21907	3510525812		102-4		LUCUS #3	CALIF CRK	40.0	
8356784	21908	3510525814		102-4		LUCUS #4	CALIF CRK	7.0	
8356785	21909	3510525814		102-4		LUCUS #5	CALIF CRK	57.0	
-DEMINEX US OIL COMPANY				RECEIVED:	09/23/83	JA: OK			
8356841	21992	3514921710		102-4		GREEN #3		60.0	WARREN PETROLEUM
-EAGLE MINERALS INC.				RECEIVED:	09/23/83	JA: OK			
8356747	23726	3510721332		103		JETER #1		0.0	SWAB CORP
-EL PASO NATURAL GAS COMPANY				RECEIVED:	09/23/83	JA: OK			
8356790		3500935598		108-PB		OREN D #1	ERICK SOUTH (BROWN-DO	29.4	EL PASO NATURAL G
8356779	22141	3514920140		108-PB		PARKS - MELVIN #1	ELK CITY - GRANITE WA	145.0	EL PASO NATURAL G
8356807	23970	3500906796		108		PUCKETT A #1	ERICK SOUTH - BROWN D	54.0	EL PASO NATURAL G
-ENFIELD CORP				RECEIVED:	09/23/83	JA: OK			
8356903	21941	3510500000		102-2		CARL HAYES #1	WILDCAT	75.0	R E H INDUSTRIES
-ENSERCH EXPLORATION INC				RECEIVED:	09/23/83	JA: OK			
8356802	22974	3504321649		103		BONNIE HASLER #1-17	N E PUTNAM	0.0	
-ESSEX EXPLORATION INC				RECEIVED:	09/23/83	JA: OK			
8356873	23588	3504521129		103		HAINES #1	NW FARGO	756.2	
8356848	23589	3515123600		103		HAMPSTEN #1	W ALVA	0.0	DELHI GAS PIPELIN
-EXXON CORPORATION				RECEIVED:	09/23/83	JA: OK			
8356906	25412	3512920930		107-DP		EVAN K FUCHS GAS UNIT #1	GRIMES	1045.0	
-FACKRELL & ASSOCIATES				RECEIVED:	09/23/83	JA: OK			
8356881	22845	3500722476		103		GUST SPANGLER #2	SIX MILE	438.0	NORTHERN NATURAL
-FALCON PETROLEUM COMPANY				RECEIVED:	09/23/83	JA: OK			
8356776	23773	3500721774		108		KIRTON #1	WILDCAT (NW DOMBEY)	4.0	PANHANDLE EASTERN
-GADSCO INC				RECEIVED:	09/23/83	JA: OK			
8356835	25308	3503920920		107-DP		KRUGER #1-6		365.0	TRANSWESTERN PIPE
-GETTY OIL COMPANY				RECEIVED:	09/23/83	JA: OK			
8356743	23266	3513700000		108		ED KILLINGSWORTH #1	SHO-VEL-TUM	5.0	OKLAHOMA NATURAL
8356742	23264	3513700000		108		ED KILLINGSWORTH #5	SHO-VEL-TUM	4.0	OKLAHOMA NATURAL
8356688	23390	3512121029		103		WHITE "P" #2	KINTA	256.0	MUSTANG FUEL CORP
-GOODSPEED J W & FORREST GRUBB				RECEIVED:	09/23/83	JA: OK			
8356801	22617	3504721177		108		REDDING #1	-SHELL LAKE	4.8	AMINOIL USA INC
8356800	22616	3504720647		108		WEINKAUF #1	SHELL LAKE	9.1	AMINOIL USA INC
-GRACE PETROLEUM CORPORATION				RECEIVED:	09/23/83	JA: OK			
8356845	23495	3509335964		108		BRUCE #1	N E AMES	0.0	ARKANSAS LOUISIAN
-GRIFFIN OIL & GAS INC				RECEIVED:	09/23/83	JA: OK			
8356799	22338	3511124147		103		ROOSEVELT 3-2		0.0	
-HARPER OIL COMPANY				RECEIVED:	09/23/83	JA: OK			
8356715	17697	3503920605		102-2		WILSON #16-1	N E MOOREWOOD	0.0	ARKANSAS LOUISIAN
8356720	23447	3500321041		103		WRIGHT #2	S E LAMBERT	63.0	PIONEER GAS PRODU
-HAWKINS OIL & GAS INC				RECEIVED:	09/23/83	JA: OK			
8356757	22183	3515321375		102-4		VASSAR #1-3	SOUTH WOODWARD	1095.0	OKLAHOMA GAS & EL
-HOLD OIL CORP				RECEIVED:	09/23/83	JA: OK			
8356789	23395	3506321667		103		BILL BOYCE #1-11	SHADY GROVE	85.0	HILL TOP INVESTME
8356838	21955	3512120948		102-2		HOWDESHELL #1	BROOKEN	300.0	ARKANSAS LOUISIAN
-HOLEXCO INC				RECEIVED:	09/23/83	JA: OK			
8356724	22844	3507121651		103		BERTHA #1	GARRETT	1.0	CITIES SERVICE CO
8356708	22841	3507121952		103		CRAWFORD #1	GARRETT	1.0	CITIES SERVICE CO
8356709	22840	3507121456		103		KEATING #1	GARRETT	1.0	CITIES SERVICE CO
8356716	22843	3507121458		103		SHELTON #1	GARRETT	1.0	CITIES SERVICE CO
8356718	22842	3507121953		103		SPROW #1	GARRETT	1.0	CITIES SERVICE CO
-HONEYMON DRILLING CO LTD				RECEIVED:	09/23/83	JA: OK			
8356775	6640	3501721148		103		ANDERSON #1	YUKON NE	190.0	PHILLIPS PETROLEU
8356896	06639	3501721079		103		HOSTER #1	YUKON	0.0	
-HPC INC				RECEIVED:	09/23/83	JA: OK			
8356725	22567	3501721687		103		SMRCKA #2	NORTH FORK	0.0	PHILLIPS PETROLEU
-INEXCO OIL COMPANY				RECEIVED:	09/23/83	JA: OK			
8356710	22087	3503920769		102-2		BASLER #1-8	N W BUTLER	550.0	PANHANDLE EASTERN
8356698	22084	3503920839		102-2		DAUGHERTY #1-9	WEST BUTLER	547.5	
8356700	22086	3503920815		102-2		GUARTNEY #1-23	N W HAMMON	913.0	TRANSWESTERN PIPE
8356905	25406	3503920911		107-DP		QUIRING #1-34	S E WEATHERFORD	1460.0	
-IRAE RONGEY				RECEIVED:	09/23/83	JA: OK			
8356705	21378	3503724119		102-2		BROWN #1 35-037-24119	GLENNPOOL	18.0	PHILLIPS PETROLEU
8356706	21379	3503723984		102-2		SMITH #1 35-037-23984	GLENNPOOL	40.0	PHILLIPS PETROLEU
-J R THOMPSON				RECEIVED:	09/23/83	JA: OK			
8356890	23690	3511122429		108		DENHAM 1A		14.0	PHILLIPS PETROLEU
8356721	23399	3511100000		108		MILNER 2A		19.0	PHILLIPS PETROLEU
8356889	23689	3511121684		108		SIMS 1A		5.0	PHILLIPS PETROLEU
8356888	23688	3511122121		108		SIMS 2A		8.0	PHILLIPS PETROLEU
8356891	23691	3511122958		108		SOUDER #2	NE SW NE SECTION 2 14	14.0	PHILLIPS PETROLEU
-JACK OIL CO				RECEIVED:	09/23/83	JA: OK			
8356893	23694	3513700000		108		FISHER #1	W MARLOW	4.0	NATURAL GAS OPERA
-JAMES C MEADE				RECEIVED:	09/23/83	JA: OK			
8356823	20045	3515120846		108		EBERLY & MEADE STONER #1-11	WEST DACOMA	9.0	MICHIGAN WISCONSI
-JEFFREY OIL CO				RECEIVED:	09/23/83	JA: OK			
8356761	23701	3511100000		103		GLORIA #1	BALDHILL	36.5	PHILLIPS PETROLEU
-JONES & PELLOW OIL CO				RECEIVED:	09/23/83	JA: OK			
8356748	23732	3501922600		103		CARTER #14-1		0.0	MOBIL OIL CORP
-KEITH F WALKER				RECEIVED:	09/23/83	JA: OK			
8356875	23456	3501900000		103		GILL #1-18	WEST HEWITT	7.3	AMINOIL USA INC
-L E JONES PRODUCTION COMPANY				RECEIVED:	09/23/83	JA: OK			
8356813	24002	3501922690		103		FLETCHER #1		33.0	MOBIL OIL CORP
-L G WILLIAMS OIL COMPANY INC				RECEIVED:	09/23/83	JA: OK			
8356850	23613	3504321560		103		HOLSAPPLE #1-22	W OAKWOOD	1.0	
-L R FRENCH JR				RECEIVED:	09/23/83	JA: OK			
8356713	23704	3509322624		103		CHEYENNE #1	CHEYENNE VALLEY	321.0	DELHI GAS PIPELIN
8356712	23703	3509322629		103		MAGNESS #1	CHEYENNE VALLEY	288.0	DELHI GAS PIPELIN
8356714	23705	3509322630		103		VALLEY 1-29	CHEYENNE VALLEY	292.0	DELHI GAS PIPELIN
-LANCER ENERGY CORP				RECEIVED:	09/23/83	JA: OK			
8356854	23623	3508300000		103		WILLIS #1	SOONER TREND	0.0	EASON OIL CO
-LEEDE OIL & GAS INC				RECEIVED:	09/23/83	JA: OK			
8356808	25399	3500920567		107-DP		BAKER #1	MAYFIELD	1398.0	EL PASO NATURAL G
-LONG ROYALTY CO				RECEIVED:	09/23/83	JA: OK			
8356882	22861	3501100000		103		CHEYENNE ARAPAHO TRIBAL LANDS #1-6	NORTHWEST CANTON	300.0	PHILLIPS PETROLEU
-M & H OIL PROPERTIES INC				RECEIVED:	09/23/83	JA: OK			
8356828	22241	3511124053		103		DARLENE #1	BALD HILL	0.0	PHILLIPS PETROLEU
-MACKELLAR INC				RECEIVED:	09/23/83	JA: OK			
8356872	23586	3507323580		103		PARSONS #2	SOONER TREND	0.0	CONOCO INC
-MAGIC CIRCLE ENERGY CORP				RECEIVED:	09/23/83	JA: OK			
8356760	22827	3515121247		103		SHIRE #2	S E ALINE	11.0	
-MAY PETROLEUM INC				RECEIVED:	09/23/83	JA: OK			

JD NO	JA DKT	API NO	D	SEC(1)	SEC(2)	WELL NAME	FIELD NAME	PROD	PURCHASER
8356786	21911	3510321725		102-4		RAGAN #1		109.5	
8356871	23585	3501722385		103		WARREN #1		54.8	
-MICHIGAN WISCONSIN PIPE LINE CO				RECEIVED:		09/23/83 JA: OK			
8356810	19504	3504321510		103		DROKE #1-10	SQUAW CREEK	0.5	
-MONSANTO COMPANY				RECEIVED:		09/23/83 JA: OK			
8356751	21541	3504320419		108-ER		THOMPSON #1	VICI SW	33.0	TRANSWESTERN PIPE
-MORGAN & STEINERT INC				RECEIVED:		09/23/83 JA: OK			
8356892	23693	3504723363		103		EVELYN #1	SOONER TREND	0.0	EXXON CO USA
-MULTISTATE PROPERTIES NV				RECEIVED:		09/23/83			
8356733	20953	3500721449		108		ALVA HOWARD 1-33	MOCANE-LAVERNE	15.0	NORTHERN NATURAL
-MURCHISON EXPLORATION CO				RECEIVED:		09/23/83 JA: OK			
8356727	23499	3506321752		103		TURVILL #1-3	WEST CALVIN	36.0	
-MUSTANG PRODUCTION CO.				RECEIVED:		09/23/83 JA: OK			
8356864	21888	3507720234		102-4		YOUNG & COOPER #1-26	RED OAK	350.0	ARKANSAS LOUISIAN
-NATOMAS NORTH AMERICA INC				RECEIVED:		09/23/83 JA: OK			
8356824	22226	3500920499		102-2		MCCOY #1-32		730.0	EL PASO NATURAL G
-NORTH CENTRAL DRILLING CO INC				RECEIVED:		09/23/83 JA: OK			
8356814	24016	3508121982		103		WARD/WALKER #1 081-76024-1	EAST DAVENPORT	60.0	NATURAL GAS ENTER
-NORTHWEST EXPLORATION COMPANY				RECEIVED:		09/23/83 JA: OK			
8356809	17808	3503920588		102-2		GOSS #1		400.0	PRODUCERS GAS CO
-NOVA ENERGY CORPORATION				RECEIVED:		09/23/83 JA: OK			
8356753	22064	3503920835		102-2		REIMAN #1-22		0.0	PRODUCERS GAS CO
-O I L ENERGY INC				RECEIVED:		09/23/83 JA: OK			
8356689	21796	3501722216		102-2		JENSEN #2-28	N E UNION CITY	1.0	PHILLIPS PETROLEU
-O N SELLERS				RECEIVED:		09/23/83 JA: OK			
8356686	23488	3511122714		103		ALMA ROSS #2		21.9	PHILLIPS PETROLEU
-OFS-TULSA CORP				RECEIVED:		09/23/83 JA: OK			
8356853	23620	3504723117		103		BARBARI #1-8	SOONER TREND	37.0	CITIES SERVICE CO
8356851	23617	3504723176		103		JORDAN #3-36	SOONER TREND	190.0	EASON OIL CO
8356852	23619	3504723177		103		WHITE #3-36	SOONER TREND	82.0	EASON OIL CO
-ONEAL DRILLING				RECEIVED:		09/23/83 JA: OK			
8356837	21950	3508300000		102-2		HARNED A-1	SOUTH GUTHRIE	12.0	BUCKEYE NATURAL G
-PATE OIL CO				RECEIVED:		09/23/83 JA: OK			
8356806	23969	3504500000		108		ROOT-MCCONNELL #1-23	NORTH SALON PROSPECT	21.0	NORTHERN NATURAL
-PAUL WALKER				RECEIVED:		09/23/83 JA: OK			
8356758	22197	3503320675		102-2 103		UNICE #3	HULEN	36.0	ARKANSAS-LOUISIAN
-PETRO-LEWIS CORPORATION				RECEIVED:		09/23/83 JA: OK			
8356736	20800	3509300000		108		BLACKBURN 16-1	SOONER TREND	0.0	UNION TEXAS PETRO
8356737	20802	3509300000		108		FOUTS 9-1	SOONER TREND	0.0	PHILLIPS PETROLEU
8356738	20801	3509300000		108		IRTLE EDWARDS 11-1	SOONER TREND	0.0	PHILLIPS PETROLEU
8356772	14170	3500300000		108-PB		LEWIS #18-1	MISSISSIPPI & OSWEGO	0.0	PARTNERSHIP PROPE
8356833	23934	3509300000		103		MCCRACKEN #12-2	AMES	10.3	PARTNERSHIP PROPE
-PHILLIPS PETROLEUM COMPANY				RECEIVED:		09/23/83 JA: OK			
8356897	18046	3513900000		108		ADLAI A #1	GUYMON S - MORROW	0.0	PANHANDLE EASTERN
8356832	23780	3501722496		103		ALIG TRUST A #1	WEST OKARCHE	0.0	
8356788	23377	3500700000		108		LOESCH A #2	COMO SE UPPER MORROW	0.0	EL PASO NATURAL G
8356780	21642	3503920816		103		RICE E #1	N CUSTER CITY	0.0	
-PLAINS PRODUCTION INC				RECEIVED:		09/23/83 JA: OK			
8356704	21095	3511921462		103		DEWITT LITTLECHIEF #1	YALE	25.0	PHILLIPS PETROLEU
-PLAINS RESOURCES INC				RECEIVED:		09/23/83 JA: OK			
8356904	21948	3501722399		102-4 103		ROBBERSON #13-15		0.0	PHILLIPS PETROLEU
-PSEC INC				RECEIVED:		09/23/83 JA: OK			
8356792	21564	3508121751		107-TF		BOREN #1-34		0.0	EL PASO NATURAL G
8356895	25323	3508122081		102-4		CLINKINGBEARD #1-2		0.0	EL PASO NATURAL G
8356752	21563	3508322109		102-4		FREUNDT #1-36		0.0	
8356798	22277	3508121789		107-TF		HARPER-STINE #1-28		0.0	EL PASO NATURAL G
8356796	22275	3508121390		107-TF		MATTHEWS #1A-4		0.0	EL PASO NATURAL G
8356793	21565	3508121752		107-TF		RACKLEY #1-35		0.0	EL PASO NATURAL G
8356794	21566	3508121786		107-TF		STANBERRY #1-31		0.0	EL PASO NATURAL G
8356894	25322	3508122034		102-4		STEIN #2-3		0.0	EL PASO NATURAL G
8356795	21567	3508121790		107-TF		VAN GUNDY #1-36		0.0	EL PASO NATURAL G
8356797	22276	3508121815		107-TF		WHITNAH #1-34		0.0	EL PASO NATURAL G
-QUAD OPERATING COMPANY				RECEIVED:		09/23/83 JA: OK			
8356770	19441	3511100000		108		RICKS #1	MOUNDS	10.0	PRODUCTION SYSTEM
-QUASIUS DAVID				RECEIVED:		09/23/83 JA: OK			
8356831	23776	3511100000		108		REDO #5		0.0	PHILLIPS PETROLEU
-R & M PETROLEUM INC				RECEIVED:		09/23/83 JA: OK			
8356859	23645	3503724438		103		BENNEIT/SWANSON #1 037-76957	MANNFORD	12.0	ARCO OIL & GAS CO
-RACHALK PRODUCTION INC				RECEIVED:		09/23/83 JA: OK			
8356826	22233	3500321023		102-4		N I CAMPBELL #1	PINGWOOD	499.0	UNION TEXAS PETRO
-RALPH E PLOTNER OIL & GAS INVEST IN				RECEIVED:		09/23/83 JA: OK			
8356884	23660	3501722467		103		PLOTNER - MICHAEL ALAN #2	NORTH PIEDMONT	18.0	PHILLIPS PETROLEU
-RAM PETROLEUM CORP				RECEIVED:		09/23/83 JA: OK			
8356768	20842	3506320974		108		SEBA #1	SE CALVIN	7.2	HILLTOP INVESTMEN
8356766	20841	3506321203		108		SEBA GOURLEY (GOURLEY)	SE CALVIN	21.3	HILL TOP INVESTME
8356767	20845	3506321202		108		SEBA GOURLEY (KUHLMAN)	SE CALVIN	16.6	HILL TOP INVESTME
-RBM OIL CO INC				RECEIVED:		09/23/83 JA: OK			
8356762	23721	3503724369		103		BROWNS CREEK #3	BROWNS CREEK	0.0	COLORADO GAS COMP
-RED EAGLE OIL CO				RECEIVED:		09/23/83 JA: OK			
8356867	23536	3509326650		103		BOZELL #1	N W OKEENE	275.0	PIONEER GAS PRODU
-REMMER OIL CO				RECEIVED:		09/23/83 JA: OK			
8356856	23641	3515300000		103		HONEYSUCKLE #1		11.0	PHILLIPS PETROLEU
-RH OPERATING CO				RECEIVED:		09/23/83 JA: OK			
8356739	23795	3503520512		108		WILLIAMS #15-1	NORTH CRAIG FIELD	6.0	TRANS-GAS CO
8356728	23797	3503520546		108		WILLIAMS #15-4	NORTH CRAIG	6.0	TRANS-GAS CO
-RICKS EXPLORATION CO				RECEIVED:		09/23/83 JA: OK			
8356898	19190	3503920594		102-4 103		MARQUIS RAYNOR 14A	WILDCAT	5.0	
8356699	22069	3511922061		102-2		STATE #16-A	W HINTON	20.0	ARCO OIL & GAS CO
-ROLLYSON CORP				RECEIVED:		09/23/83 JA: OK			
8356886	23670	3504922101		103		T S HOLLOWAY #2-20	MAYSVILLE	36.5	WARREN PETREUM CO
-RUBY OPERATING CO				RECEIVED:		09/23/83 JA: OK			
8356763	23741	3510526179		103		HARVEY #1	LENAPAH	18.0	NORTHWEST PIPELIN
-SABINE CORP				RECEIVED:		09/23/83 JA: OK			
8356858	23644	3509322685		103		KUSCH #5-2		15.0	PHILLIPS PETROLEU
-SABINE PRODUCTION COMPANY				RECEIVED:		09/23/83 JA: OK			
8356866	23527	3504320606		108		ISSAAC SMOKER D #1		0.0	OKLAHOMA GAS & EL
8356865	23526	3500700000		108		WILLIAMS #1		0.0	NORTHERN NATURAL
-SAMSON RESOURCES COMPANY				RECEIVED:		09/23/83 JA: OK			
8356702	18572	3504321524		102-4 103		ELZA #1	EAST PUTNAM	73.0	HYDROCARBON SERVI
8356701	18289	3504321459		102-4 103		SUE #1	EAST PUTNAM	109.5	HYDROCARBON SERVI
8356703	19373	3504321532		102-4 103		VERGIE #1	EAST PUTNAM	13.7	HYDROCARBON SERVI
-SAND ROCK PETROLEUM INC				RECEIVED:		09/23/83 JA: OK			
8356876	23459	3510721456		103		INEZ BONNEY #1	CLEARVIEW FIELD	24.1	PHILLIPS PETROLEU
-SANTA FE-ANDOVER OIL CO				RECEIVED:		09/23/83 JA: OK			

JD NO	JA DKT	API NO	D	SEC(1)	SEC(2)	WELL NAME	FIELD NAME	PROD	PURCHASER
8356754	22117	3505121242		102-4	103	RATTERMAN #20-1		180.0	DELHI GAS PIPELIN
-SEAGULL OPERATING CO INC				RECEIVED:		09/23/83 JA: OK			
8356870	23584	3510721487		103		FIXICO #1	NORTH CASTLE	91.0	GOLDEN ARROW GAS
-SENECA OIL CO				RECEIVED:		09/23/83 JA: OK			
8356707	21771	3501722210		102-4		HODGES #1-29		62.1	PHILLIPS PETROLEU
-SOUTHLAND ROYALTY CO				RECEIVED:		09/23/83 JA: OK			
8356773	10917	3515120961		108-PB		DEVINE #1-13	S W FREEDOM	14.7	PANHANDLE EASTERN
-SOUTHWESTERN ENERGY PRODUCITON CO				RECEIVED:		09/23/83 JA: OK			
8356844	23492	3503920735		103		OGLE #1	ARAPAHO	0.0	NATURAL GAS PIPEL
-STANTON ENERGY INC				RECEIVED:		09/23/83 JA: OK			
8356719	23491	3514322453		103		CAMPBELL #1	KEYSTONE	100.0	COLORADO GAS COMP
8356696	22018	3514322333		102-4	103	LUVENA #1	KEYSTONE	25.0	COLORADO GAS COMP
-STEVE JERNIGAN INC				RECEIVED:		09/23/83 JA: OK			
8356836	08473	3509321940		103		EDWARDS #4	CHEYENNE VALLEY	0.0	PHILLIPS PETROLEU
8356694	21976	3501722348		102-2		ROYSE BROTHERS #4		0.0	PHILLIPS PETROLEU
8356693	21975	3501722376		102-2		ROYSE BROTHERS #5		0.0	PHILLIPS PETROLEU
8356692	21974	3501722377		102-2		ROYSE BROTHERS #6		0.0	PHILLIPS PETROLEU
8356691	21973	3501721196		102-2		SPEAR #1		0.0	PHILLIPS PETROLEU
-STEVE JERNIGAN OIL & GAS				RECEIVED:		09/23/83 JA: OK			
8356774	08956	3507322825		103		MURPHY A #1		0.0	PHILLIPS PETROLEU
-SUN EXPLORATION & PRODUCTION CO				RECEIVED:		09/23/83 JA: OK			
8356731	17015	3507100000		108		GUYER (E BLACKWELL #3-1) #1	N W GARRETT	2.0	CITIES SERVICE CO
-SUNRISE EXPLORATION INC				RECEIVED:		09/23/83 JA: OK			
8356887	23682	2512140600		102-4	103	MEADOWS #1	BAILEY TURNPIKE	450.0	
8356827	22239	3529209290		102-2	103	WILLIAMS #1	S W LEEDY	550.0	
-TARGA OIL & GAS INC				RECEIVED:		09/23/83 JA: OK			
8356741	23175	3508121860		103		WILLMON 1-23	DAVENPORT	12.6	MERIDIAN ENERGY I
-TEMPLETON ENERGY INC				RECEIVED:		09/23/83 JA: OK			
8356687	23394	3503920621		103		EYSTER #1	CUSTER CITY	182.0	
-TENNECO OIL COMPANY				RECEIVED:		09/23/83 JA: OK			
8356777	23510	3504300000		108		CLYDE COGSWELL #1	SEILING NE	5.0	PANHANDLE EASTERN
8356723	23160	3501900000		108		JIM CARTER "A" #1	CADDO	3.0	UNION OIL CO OF C
8356840	21981	3512920911		102-2		RATCLIFF 1-7	S E STRONG CITY	185.0	DELHI GAS PIPELIN
-TEXACO INC				RECEIVED:		09/23/83 JA: OK			
8356729	2806	3509500000		108-ER		A L DANEY #2	AYLESWORTH	15.2	PIONEER GAS PRODU
8356722	23398	3508323006		103		S W TITLE & TRUST "B" #1	OKARCHE N E	0.0	CONOCO INC
-TEXAS AMERICAN OIL CORP				RECEIVED:		09/23/83 JA: OK			
8356830	23740	3504722579		103		D WARTICK #1-29	SOONER TREND	36.5	PHILLIPS PETROLEU
-THE WIL-MC OIL CORP				RECEIVED:		09/23/83 JA: OK			
8356821	23815	3511922032		103		BLAIR "C" #1	S W STILLWATER	9.0	SUN GAS TRANSMISS
8356820	23813	3511922150		103		BLAIR "C" #2	S W STILLWATER	9.0	SUN GAS TRANSMISS
8356822	23816	3511921818		103		BOSTIAN "C" #1	S E RANSEY	10.0	SUN GAS TRANSMISS
8356726	23497	3505321034		103		EDIGER TRUST #1	EAST WAKITA	9.0	SUN EXPLORATION &
8356819	23812	3510321782		103		FREEMAN #1	POLO	86.0	TRANSOK PIPE LINE
8356711	23490	3508322000		103		KNIGHTLINGER #1	LANGSTON SOUTH	26.0	SUN EXPLORATION &
-TIDEMARK EXPLORATION CO				RECEIVED:		09/23/83 JA: OK			
8356843	22088	3504521103		102-4	103	PEER #1-24	SOUTH GAGE	246.4	PHILLIPS PETROLEU
-TOM F MARSH				RECEIVED:		09/23/83 JA: OK			
8356759	22444	3502500000		108-ER		MINNS A-2	KEYES FIELD	14.0	COLORADO INTERSTA
-TOWNER PETROLEUM CO				RECEIVED:		09/23/83 JA: OK			
8356791	21453	3501521049		102-4	103	FRANK EDGE #11-1		0.0	PIONEER GAS PRODU
8356899	20389	3501521207		102-4	103	J W DUNCAN #12-1		0.0	PIONEER GAS PRODU
8356839	21957	3501722337		102-2		LEIGHTON #5-1		0.0	
8356765	21525	3501521757		102-3		OPITZ #1-1		0.0	ARKANSAS LOUISIAN
-TRINEHA INC				RECEIVED:		09/23/83 JA: OK			
8356846	23576	3501722407		103		HARGIS 1-34	S W MUSTANG	12.0	PHILLIPS PETROLEU
-TXO PRODUCTION CORP				RECEIVED:		09/23/83 JA: OK			
8356690	21812	3503920851		102-2		KAUK A-1	SW ALEDO	1478.0	DELHI GAS PIPELIN
8356778	23685	3515121341		103		WHIPPLE #2	NE WAYNOKA	0.0	DELHI GAS PIPELIN
-UNION TEXAS PETROLEUM				RECEIVED:		09/23/83 JA: OK			
8356735	20726	3504700000		108		KNECHT J W #1	HODGE I	42.8	PANHANDLE EASTERN
-UNIT DRILLING & EXPLORATION CO				RECEIVED:		09/23/83 JA: OK			
8356857	23642	3505121296		103		SCHAUB #1	WEST CHICKASHA	130.0	UNITED GAS PIPE L
-VALIDUS, INC.				RECEIVED:		09/23/83 JA: OK			
8356734	22503	3505321032		103		BROWN "15" #2	LAMONT	31.0	FARMLAND INDUSTRI
-VULCAN ENERGY CORP				RECEIVED:		09/23/83 JA: OK			
8356740	22854	3507323527		103		SCHOELEN #2	SOONER TREND	113.2	PHILLIPS PETROLEU
-VULCAN OIL & GAS CORP				RECEIVED:		09/23/83 JA: OK			
8356878	23466	3511720946		103		JASON #1	E MARAMEC	37.0	COLORADO GAS COMP
8356868	23568	3511721001		103		MICHAEL #1	BRYAN	26.0	COLORADO GAS COMP
8356869	23569	3511721048		103		MICHAEL #3	BRYAN	23.0	COLORADO GAS COMP
8356877	23464	3511720947		103		TODD #1	E MARAMEC	18.0	COLORADO GAS COMP
-WESTWIND PRODUCTION CO INC				RECEIVED:		09/23/83 JA: OK			
8356860	23647	3512300000		103		SURGNIER #3	EAST FRANCIS	0.0	CONTINENTAL GAS S
-WESTWOOD ENERGY INC				RECEIVED:		09/23/83 JA: OK			
8356842	22003	3511921182		102-4		STANDEFER #1 (119-63169)	MARKHAM NORTH	18.9	PHILLIPS PETROLEU
-WHITE HACKLE RESOURCES INC				RECEIVED:		09/23/83 JA: OK			
8356803	23005	3510121736		103		WEEKS #1	BALD HILL	42.0	
-WILLIAM H DAVIS				RECEIVED:		09/23/83 JA: OK			
8356818	23807	3505321103		103		INA RAGAINS #1	WAKITA TREND	180.0	NORTHWEST CENTRAL
-WOODS PETROLEUM CORPORATION				RECEIVED:		09/23/83 JA: OK			
8356755	22124	3512920897		102-2		BUD SWITZER #9-2	SW LEEDEY	683.0	DELHI GAS PIPELIN
-101 ENERGY CORP				RECEIVED:		09/23/83 JA: OK			
8356834	20967	3504722764		103		KENNEDY 22-1	SOONER TREND	0.0	WELLHEAD ENTERPRI

[FR Doc. 83-28314 Filed 10-17-83; 8:45 am]

BILLING CODE 6717-01-C

federal register

Tuesday
October 18, 1983

Part VIII

Committee for Purchase From the Blind and Other Severely Handicapped

Procuremet List 1984; Establishment

COMMITTEE FOR PURCHASE FROM THE BLIND AND OTHER SEVERELY HANDICAPPED

Procurement List 1984; Establishment

The Committee for Purchase from the Blind and Other Severely Handicapped was established by Pub. L. 92-28, June 23, 1971 (85 Stat. 77, 41 U.S.C. 46-48c) (hereinafter the Act) for the purpose of directing the procurement of selected commodities and services by the Federal Government to qualified workshops serving blind and other severely handicapped individuals with the objective of increasing the employment opportunities for these individuals. The Committee is required to establish and publish in the **Federal Register** a procurement list of:

(1) Commodities produced by any qualified nonprofit agency for the blind or by any qualified nonprofit agency for other severely handicapped, and

(2) The services provided by any such agency

which the Committee determines are suitable for procurement by the Government pursuant to the Act.

The Act further provides that any entity of the Government which intends to procure any commodity or service on the procurement list, shall procure such commodity or service, at the price established by the Committee, from a qualified nonprofit agency for the blind or such agency for the other severely handicapped if the commodity or service is available within the normal period required by that Government entity. However, this requirement shall not apply to the procurement of any commodity which is available from Federal Prison Industries, Inc.

A Government entity is defined as any entity of the legislative branch or judicial branch, any executive agency or military department (as such agency and department are respectively defined by Sections 102 and 105 of Title 5, United States Code), the U.S. Postal Service, and any nonappropriated fund instrumentality under the jurisdiction of the Armed Forces.

Notice is hereby given pursuant to Section 2 of the Act that Procurement List 1984 is established as set forth below. Procurement List 1984 supersedes Procurement List 1983, November 18, 1982 (47 FR 52101) and subsequent changes thereto through October 14, 1983.

Any proposed additions or deletions to Procurement List 1983 pending on this date shall be considered as pending and applicable to Procurement List 1984.

By the Committee.

C. W. Fletcher,

Executive Director.

Assignment Codes

Central Nonprofit Agency and Code

National Industries for the Blind—IB
National Industries for the Severely Handicapped—SH

Commodities

Class 1005

Sling, Adjustable, Small Arms (IB), 1005-00-167-4336.
Sling, Padded, Adjustable (IB), 1005-00-312-7177.
Swab, Small Arms Cleaning (IB), 1005-00-912-4248, 1005-00-288-3565.

Class 1095

Scabbard, Bayonet-Knife (IB), 1095-00-508-0339.

Class 1220

Case, Carrying (IB), 1220-00-765-5870, 1220-00-937-8286.

Class 1430

Circuit-Card Assembly (SH), 1430-00-409-7997, 1430-00-421-4036.

Class 1660

Harness Assembly (SH), 1660-00-066-2078.

Class 1670

Message Dropper (SH), 1670-00-797-4495.

Class 1680

Wire Bundle Assemblies (SH), 1680-00-881-4215, 1680-00-884-0409, 1680-00-894-3991, 1680-01-125-9648, 1680-00-919-3706, 1680-00-883-4487, 1680-00-222-3876, 1680-00-826-7752, 1680-00-974-5275, 1680-00-974-5276, 1680-00-998-8594.

Class 1730

Chock Assembly, Wheel Unpainted (IB), 1730-00-294-3694, 1730-00-063-4095, 1730-00-294-3696, 1730-00-294-3695, 1730-00-945-8450, 1730-00-163-8317 (4 x 6 x 24"), 1730-00-NIB-001A 2" x 4" x 8" (std), 1730-00-NIB-001B 6" x 8" x 18" (std), 1730-00-NIB-001C 6" x 8" x 76" (std), 1730-00-NIB-001D 8" x 12" (U-shaped), 1730-00-NIB-001E 10" x 20" (U-shaped).
Chock Assembly, Wheel Painted (IB), 1730-00-294-3694, 1730-00-063-4095, 1730-00-294-3696, 1730-00-294-3695, 1730-00-945-8450, 1730-00-163-8317 (4 x 6 x 24"), 1730-00-NIB-001A 2" x 4" x 8" (std), 1730-00-NIB-001B 6" x 8" x 18" (std), 1730-00-NIB-001C 6" x 8" x 76" (std), 1730-00-NIB-001D 8" x 12" (U-shaped), 1730-00-NIB-001E 10" x 20" (U-shaped).
Chock Assembly, Wheel, Codit Reflecting (IB), 1730-00-294-3694, 1730-00-063-4095, 1730-00-294-3696, 1730-00-294-3695, 1730-00-945-8450, 1730-00-163-8317 (4 x 6 x 24"), 1730-00-NIB-001A 2" x 4" x 8" (std), 1730-00-NIB-001B 6" x 8" x 18" (std), 1730-00-NIB-001C 6" x 8" x 76" (std), 1730-00-NIB-001D 8" x 12" (U-shaped), 1730-00-NIB-001E 10" x 20" (U-shaped).
Chock Assembly, Wheel Reflective Tape (IB), 1730-00-294-3694, 1730-00-063-4095, 1730-00-294-3696, 1730-00-294-3695, 1730-00-945-8450, 1730-00-163-8317 (4 x 6 x 24"), 1730-00-NIB-001A 2" x 4" x 8" (std), 1730-00-NIB-001B 6" x 8" x 18" (std), 1730-00-NIB-001C 6" x 8" x 76" (std), 1730-00-NIB-001D 8" x 12" (U-shaped), 1730-00-NIB-001E 10" x 20" (U-shaped),

Class 2090

Weight, Canvas Bag (IB), 2090-00-845-9150.

Class 2540

Belt, Automobile, Safety (IB), 2540-00-894-1273, 2540-00-894-1275, 2540-00-894-1274, 2540-00-894-1276.
Cushion Assembly, Back Rest (SH), 2540-00-737-3308.
Cushion Assembly, Seat Back (SH), 2540-01-065-6288.
Cushion Seat, Vehicular (SH), 2540-00-808-3811.
Kit, Deep Water Fording (SH), 2540-00-473-0111.
Mirror and Bracket Assembly (SH), 2540-00-575-8392.

Class 3510

Net, Laundry (IB), 3510-00-273-9738, 3510-00-273-9439.

Class 3920

Truck, Hand (IB), 3920-00-847-1305.

Class 3990

Pallet, Material Handling (SH), 3990-00-222-1051, 3990-00-555-0458, Sharpe Army Depot, Lathtop, CA only, 3990-00-599-5326, Mechanicsburg, PA depot only, 3990-00-935-7826, Pine Bluff Arsenal only.
Pallet, Warehouse (SH), 3990-00-NSH-0011 40 x 44", Army and Air Force Exchange Service, Oakland Army Base, CA only.
Pallet, Wood (SH), 3990-00-366-6806, 3990-00-77-1721, New Cumberland Army depot only, 3990-00-NSH-0001 (48 x 40 x 36"), Social Security Administration, Baltimore, MD only, 3990-00-NSH-0005 (24 x 20"), New Cumberland Army depot only.

Class 4130

Filter, Air Conditioning (IB), 4130-00-870-8796 Rgns 4 and 5, 4130-00-274-7800 Rgns 2,3,4,5,6,7,8,9,10, 4130-00-541-3220 Rgns 4 and 5, 4130-00-756-1840 Rgns 2,3,4,5,6,7,8,9,10, 4130-00-720-4143 Rgns 4 and 5, 4130-00-249-0966 Rgns 2,3,4,5,6,7,8,9,10, 4130-00-203-3318 Rgns 4 and 5, 4130-00-203-3321 Rgns 2,3,4,5,6,7,8,9,10, 4130-00-542-4482 Rgns 4 and 5, 4130-00-959-4734 Rgns 4 and 5, 4130-00-756-0978 Rgns 4 and 5, 4130-00-951-1208 Rgns 4 and 5.

Class 4240

Bag, Waterproofing (IB), 4240-00-377-9401.
Harness, Head (SH), 4240-00-690-8765, 4240-00-961-1064.

Class 4820

Valve, Ball (SH), 4820-00-052-4651, 4820-00-052-4653.

Class 4910

Creeper, Mechanic's (SH), 4910-00-251-6981, 4910-00-106-7834, 4910-00-NSH-0001.

Class 5120

Screwdriver, Cross-Tip (SH), 5120-00-820-2995, 5120-00-060-2004, 5120-00-224-7370, 5120-00-529-3101, 5120-00-227-7293, 5120-00-234-8913, 5120-00-542-3438, 5120-00-224-7375, 5120-00-596-0866, 5120-00-237-8174, 5120-00-580-2361.
Screwdriver Set, Cross-Tip (SH), 5120-00-357-7175, 5120-00-580-0334.
Screwdriver, Flat-Tip (SH), 5120-00-278-1269, 5120-00-289-9662, 5120-00-287-2504, 5120-00-287-2505, 5120-00-278-1267, 5120-00-541-3004, 5120-00-288-7803, 5120-00-236-2127, 5120-00-278-1270, 5120-00-227-7356, 5120-00-260-4837, 5120-00-227-7334, 5120-00-278-1268, 5120-00-293-0314, 5120-00-337-2465, 5120-00-540-0563, 5120-00-180-0708, 5120-00-222-8866, 5120-00-596-8502, 5120-00-278-1273, 5120-00-062-0813, 5120-00-293-3311, 5120-00-222-8852, 5120-00-596-9364, 5120-00-293-0315, 5120-00-293-3309, 5120-00-227-7377, 5120-00-180-3490, 5120-00-236-2140, 5120-00-062-8454, 5120-00-720-4969.

Class 5140

Bag, Tool (IB), 5140-00-772-4142.
Bag, Tool (SH), 5140-00-473-6256.
Tool Box, Portable (SH), 5140-00-289-8911, 5140-00-289-8910.

Class 5350

Mat, Abrasive (IB), 5350-00-967-5089, 5350-00-967-5093, 5350-00-967-5092.

Class 5440

Stepladder (IB), 5440-00-514-4483, 5440-00-514-4485, 5440-00-514-4487, 5440-00-171-9836, 5440-00-227-1592, 5440-00-227-1593, 5440-00-227-1594, 5440-00-227-1595, 5440-00-227-1596, 5440-00-531-2589.

Class 5510

Lath, Wood (SH), 5510-00-NSH-0002 (⅜ x 1½ x 36"), 5510-00-NSH-0003, (⅜ x 1½ x 48"), BLM and U.S. Forest Service in Washington and Oregon only.
Stake, Wood (SH), 5510-00-NSH-0001, BLM and 5 Oregon locations only, U.S. Forest Service in Washington and Oregon only.
Stakes, Wood, Location (SH), 5510-00-171-7701, 5510-00-171-7700, 5510-00-171-7734.
Stakes, Wood, Hub (SH), 5510-00-171-7733, 5510-00-171-7732.
Wedge Wood (SH), 5510-00-640-9237.

Class 5660

Fasteners, Fence Post (SH), 5660-00-148-7251.

Class 5826

Circuit Card Assembly (SH), 5826-00-237-9949.

Class 5940

Adapter, Battery Terminal (SH), 5940-00-549-6583, 5940-00-549-6581.

Class 6150

Cable Assembly, Power (SH), 6150-00-935-8799, 6150-00-507-8852.

Class 6230

Flashlight (SH), 6230-00-163-1856.
Lantern, Electric, Head (SH), 6230-00-643-3562.
Light, Desk (SH), 6230-00-299-771, 6230-00-682-3423.
Light, Marker Distress (SH), 6230-00-892-5192.
Light, Marker, Distress (with pouch) (SH), 6230-00-067-5209.
Light, Marker, Distress (without pouch) (SH), 6230-00-938-1778.

Class 6505

Ammonia Inhalant Solution, Aromatic (SH), 6505-00-106-0875,
Iodine Ampoules, NF (SH), 6505-00-664-1408.
Thimerosal Tincture, NF (SH), 6505-00-664-6911.

Class 6510

Bandage, Muslin, Compressed, Camouflaged (SH), 6510-00-201-1755.

Class 6515

Case, Ear Plug (SH), 6515-00-299-8287 (80% of Government Requirement).
Kit, Suture Removal (IB), 6515-00-690-6911.
Tourniquet, Non-Pneumatic (IB), 6515-00-383-0565.

Class 6520

Toothbrush, Aspiration (SH), 6520-01-085-3438.

Class 6530

Bag, Urine Collection (SH), 6530-00-057-0953, 6530-00-761-0932, 6530-00-761-0936.
Cover, Litter (IB), 6530-00-784-1035, 6530-00-784-1250.
Drape, Surgical (IB), 6530-00-299-9608, 6530-00-299-9607, 6530-00-299-9605, 6530-00-299-9604.
Kit, Shaving Surgical Preparation (IB), 6530-00-676-7372.
Litter, Folding (IB), 6530-00-783-7905.
Pad, Cooling, Chemical (SH), 6530-00-133-5299.
Pad, Examining Table (IB), 6530-00-960-6616.
Pad, Hospital Stretcher (IB), 6530-00-269-0004.
Pad, Litter (IB), 6530-00-137-3016.
Strap, Webbing Patient Securing (IB), 6530-00-784-4205.
Surgical Pack, Disposable (IB), 6530-00-103-6659.
Urinal, Incontinent (IB), 6530-01-004-8969, 6530-00-290-8292, 6530-01-081-5304, 6530-01-081-5303.
Urinary Drainage Set (SH), 6530-01-056-3659.
Wrapper, Sterilization (IB), 6530-00-299-9603, 6530-00-197-9223, 6530-00-197-9228, 6530-00-197-9283, 6530-00-926-4902, 6530-00-926-4903, 6530-00-926-4904, 6530-00-926-4905.

Class 6532

Cap, Operating, Surgical (IB), 6532-00-299-9614, 6532-00-299-9613, 6532-00-299-9612.
Cap, Operating, Surgical (SH), 6532-00-250-5042, 6532-00-083-6545, 6532-00-250-5041, 6532-00-122-0468.
Clothing, Operating Room (SH), 6532-00-261-9005, 6532-00-290-1887, 6532-00-172-3509, 6532-00-172-3507, 6532-00-172-3506, 6532-00-158-9890, 6532-00-009-7174.
Dress, Operating, Surgical (SH), 6532-00-149-0464, 6532-00-149-0465, 6532-00-149-0466, 6532-00-149-0467, 6532-00-149-0472, 6532-00-149-0473.
Gown, Hospital (SH), 6532-00-104-9895.
Gown, Hospital, Patient's Bedshirt (SH), 6532-01-005-8411, 6532-01-005-8412.
Gown, Hospital Personnel (SH), 6532-01-045-5380, 6532-01-045-5381.
Gown, Operating, Surgical (SH), 6532-00-009-2034, 6532-00-009-2035.
Gown, Patient Examining (SH), 6532-00-421-7828.
Pajamas, Ladies (SH), 6532-00-NSH-0001, 6532-00-NSH-0002, 6532-00-NSH-0003, 6532-00-NSH-0004.
Pillowcase, Disposable (IB), 6532-01-125-3269.
Robe, Dressing, Nomex (SH), 6532-00-003-3057, 6532-00-006-3482.
Robe, Ladies (SH), 6532-00-NSH-0005.
Shirt, Operating, Surgical (SH), 6532-00-149-0322, 6532-00-149-0323, 6532-00-149-0324, 6532-00-149-0325.
Smock, Man's Dental Operating (SH), 6532-00-159-4881, 6532-00-926-9964, 6532-00-926-9975, 6532-00-926-9976.
Suit, Convalescent (SH), 6532-01-076-8684, 6532-01-076-8683, 6532-01-076-7369, 6532-01-076-9769.
Trousers, Operating, Surgical (SH), 6532-00-149-0327, 6532-00-149-0328, 6532-00-149-0329, 6532-00-149-0330.

Class 6540

Case, Spectacles (IB), 6540-01-131-7919, 6540-01-131-7918.

Class 6545

Surgical Dressing Set (IB), 6545-00-105-5826.

Class 6625

Test Set, Lead (SH), 6625-00-553-1442.

Class 6630

Micro Bleeder (IB), 6630-01-NIB-0002.
Tube, Bleeding (IB), 6630-01-NIB-0001.

Class 6645

Clock, Wall (IB), 6645-00-514-3523, 6645-00-530-3342 Rgns 4, 5, 6, 7, 6645-01-046-8848, 6645-01-046-8849.

Class 6695

Sampling Kit, Spectrometric Oil Analysis (IB), 6695-01-045-9820.

Class 6840

Disinfectant, Detergent (IB), 6840-00-687-7904, 6840-00-584-3129, 6840-00-551-8345.

Class 7105

Frame, Picture (SH), 7105-00-053-0170, 7105-00-061-5834, 7105-00-052-8697, 7105-00-052-8695, 7105-00-465-6199, 7105-00-149-1277, 7105-00-297-3398, 7105-00-903-1842, 7105-00-903-1843, 7105-00-149-1282, 7105-00-149-1281, 7105-00-641-4385, 7105-00-986-7356, 7105-00-297-3397, 7105-00-052-8696, 7105-00-149-1276.

Class 7110

Blackboard (SH), 7110-00-132-6651.
Bookcase, Wood, Executive (SH), 7110-00-973-5127.
Credenza (SH), 7110-00-762-5513.
Table, Wood (SH), 7110-00-958-0780, 7110-00-923-7675, 7110-00-903-3061, 7110-00-902-3052.
Tables, Steel (SH), 7110-00-113-0448, 7110-00-113-0454, 7110-00-149-2044, 7110-00-

149-2045, 7110-00-149-2046, 7110-00-149-2047.

Class 7195

Bulletin Board (IB), 7195-00-989-2370, 7195-00-844-9036, 7195-00-989-2371, 7195-00-844-9037, 7195-00-989-2372, 7195-00-844-9038, 7195-00-990-0615, 7195-00-843-7938.
Costumer, Wood (SH), 7195-00-132-6642.

Class 7210

Bedspread (IB), 7210-00-728-0186, 7210-00-728-0187, 7210-00-728-0188, 7210-00-728-0189, 7210-00-728-0190, 7210-00-728-0191, 7210-00-728-0173, 7210-00-728-0175, 7210-00-728-0176, 7210-00-728-0177, 7210-00-728-0178, 7210-00-728-0179, 7210-00-408-2800.
Bedspring (IB), 7210-00-582-7540, 7210-00-582-0984, 7210-00-110-8104, 7210-00-582-7541, 7210-00-110-8105.
Blanket, Bed/Bath (Flame-Resistant) (IB), 7210-01-141-2458.
Cover, Bed (IB), 7210-01-116-7860, 7210-01-120-0679, 7210-01-116-7858, 7210-01-116-7859, 7210-01-118-4085, 7210-01-116-7855, 7210-01-116-7856, 7210-01-116-7857, 7210-01-116-7854, 7210-01-116-7853, 7210-01-120-8015, 7210-01-124-7626, 7210-01-120-8013, 7210-01-120-8014, 7210-01-120-8011, 7210-01-120-8010, 7210-01-122-5015, 7210-01-120-8012, 7210-01-125-9250, 7210-01-120-8009, 7210-01-123-5148, 7210-01-120-8017, 7210-01-120-8021, 7210-01-120-8022, 7210-01-120-8018, 7210-01-124-8303, 7210-01-120-8019, 7210-01-120-8020, 7210-01-123-5149, 7210-01-120-8016.
Cover, Mattress (IB), 7210-00-291-8419, 7210-00-205-3083, 7210-00-205-3082, 7210-00-067-7969, 7210-00-998-7745, 7210-00-883-8492, 7210-00-140-4231, 7210-00-140-4234, 7210-00-543-6001, 7210-00-171-1091, 7210-00-935-6619, 7210-00-230-1041, 7210-00-241-9718.
Insect Bar, Nylon (SH), 7210-00-266-9736.
Mattress, Cotton-Felt (IB), 7210-00-139-6517, 7210-00-139-6555, 7210-00-139-6538.
Mattress, Foam (IB), 7210-00-290-8300, 7210-00-275-5873, 7210-00-275-5874, 7210-00-290-8298, 7210-00-290-8297, 7210-00-052-7327, 7210-00-889-3733, 7210-00-290-8299, 7210-00-682-6503, 7210-00-682-6504.
Mattress, Innerspring (IB), 7210-00-205-3585, 7210-00-139-6424, 7210-00-716-0706, 7210-00-139-6411, 7210-00-205-3534, 7210-00-139-6434, 7210-00-139-6428, 7210-00-110-8102, 7210-00-110-8103, 7210-38-75-100, 38 x 75", 7210-53-75-100, 53 x 75".
Mattress, Innerspring, Plastic-Coated (IB), 7210-00-995-1093, 7210-00-682-7146, 7210-00-529-3709, 7210-00-NIB-0001, 36 x 75", Veterans Administration requirements only.
Pad, Mattress (IB), 7210-00-227-1526, 7210-00-753-3042.
Pillow, Bed (IB), 7210-00-619-8262, 7210-00-205-3205 (Regional 1 thru 7 only), 7210-00-753-6228, 7210-01-035-3342, 7210-00-894-1144, 7210-01-015-5190 (96,000 each annually), 7210-00-119-5358.
Pillow, Passenger, Headrest (IB), 7210-00-682-6601.
Pillowcase (IB), 7210-00-054-7910, 7210-00-259-9005, 7210-00-259-9006, 7210-00-119-7356, 7210-00-231-2373, 7210-00-259-9004, 7210-00-259-8897, 7210-00-081-1380.
Pillowcase (SH), 7210-00-119-7357, 7210-01-030-5311.
Pillowcase, Disposable (IB), 7210-00-883-8494, 7210-00-852-3417.
Protector, Hospital Bed, Mattress (IB), 7210-00-761-1471, 7210-00-761-1470.
Protector, Hospital Bed, Pillow (IB), 7210-00-958-9118.
Sheet, Bed (IB), 7210-00-299-9611.
Tablecloth (SH), 7210-01-492-8381.
Towel, Bath, Disposable (IB), 7210-00-029-0370.
Washcloth (IB), 7210-01-013-2824.

Class 7220

Mat, Floor (IB), 7220-00-205-3099, 7220-00-224-6487, 7220-00-238-8852, 7220-00-224-6486, 7220-00-238-8854, 7220-00-165-7020, 7220-01-023-9487, 7220-01-023-9489, 7220-01-024-5997, 7220-01-023-9496, 7220-01-023-9490, 7220-01-023-9491, 7220-01-023-9493, 7220-01-023-9494, 7220-01-023-9495.
Mat, Floor (SH), 7220-00-205-3192, 7220-00-205-3182, 7220-00-457-6057, 7220-00-457-6063, 7220-00-151-6519, 7220-00-151-6518, 7220-00-151-6517, 7220-00-477-3063, 7220-00-194-1609, 7220-00-457-6046, 7220-00-457-6054.

Class 7230

Curtain, Shower (IB), 7230-00-205-1762, 7230-00-247-1280.

Class 7290

Cover, Ironing Board (IB), 7290-00-130-3271.

Class 7330

Pad, Bakery (IB), 7330-00-379-4439 (Rgn W,3,5,6,8).
Tongs, Food Serving (SH), 7330-00-616-0997, 7330-00-616-0998, 7330-00-616-1000.

Class 7340

Flatware, Plastic, Heavy Duty (IB), 7340-00-022-1315, 7340-00-022-1316, 7340-00-022-1317, 7340-00-401-8041.
Flatware, Plastic, Picnic (IB), 7340-00-170-8374, 7340-00-205-3187, 7340-00-205-3342.
Spoon, Picnic, Plastic (IB), 7340-00-119-1300.

Class 7350

Cup, Plastic (SH), 7350-00-721-9003, 7350-00-082-5741, 7350-00-926-1661, 7350-00-145-6126, 7350-00-761-7467, 7350-00-914-5089, 7350-00-914-5088.

Class 7360

Dining Packet (Dietetic) (IB), 7360-00-177-4958, 7360-00-177-4959, 7360-00-177-4960, 7360-00-177-4961, 7360-00-177-4962, 7360-00-177-4963, 7360-00-935-6416, 7360-00-935-6417, 7360-00-935-6420, 7360-00-935-6421.
Dining Packet (IB), 7360-00-935-6407, 7360-00-935-6408, 7360-00-935-6409, 7360-00-935-6410, 7360-00-935-6741, 7360-00-935-6412, 7360-00-935-6413.
Dining Packet, Inflight (IB), 7360-00-660-0526.
Flatware Set, Plastic (IB), 7360-00-634-4800.

Class 7510

Binder, Awards Certificate (IB), 7510-00-115-3250, 7510-00-482-2994, 7510-01-056-1927.
Binder, Looseleaf (IB), 7510-00-281-4309, 7510-00-281-4314, 7510-00-582-4201, 7510-00-281-4310, 7510-00-281-4311, 7510-00-281-4313, 7510-00-281-4315, 7510-00-286-7792, 7510-00-286-7794, 7510-00-582-5488, 7510-00-286-7791, 7510-00-582-3807, 7510-00-782-2663, 7510-00-409-8646, 7510-00-409-8647, 7510-00-984-5787, 7510-00-965-2443.
Binder, Looseleaf, Presentation (IB), 7510-00-582-5398, 7510-00-582-5399, 7510-00-582-5400.
Binder, Note Pad (IB), 7510-00-286-6954, 7510-00-145-0296, 7510-00-728-8060, 7510-00-053-5591.
Board, Wall Calendar (IB), 7510-00-789-2455.
Calendar Pad, (SH), 7510-01-117-7710 (1984), 7510-01-117-7711 (1985).
Clip, Paper (SH), 7510-00-161-4292.
Envelope, Crystal Clear Vinyl (IB), 7510-00-NIB-0003, 7510-00-NIB-0004, 7510-00-NIB-0005, 7510-00-NIB-0006.
Envelope, Transparent (IB), 7510-00-782-6274, 7510-00-782-6275, 7510-00-782-6276.
Eraser, Mechanical Pencil (IB), 7510-00-307-7885.
File Back (IB), 7510-00-NIB-0002.
File Backer, Paper (IB), 7510-00-285-2567.
File Front (IB), 7510-00-NIB-0001.
Pad, Typewriter (IB), 7510-00-257-2576, 7510-00-530-6412, 7510-00-849-1137.
Paperweight, Shotfilled (IB), 7510-00-286-6985.
Pencil (IB), 7510-00-286-5757, 7510-00-281-5234, 7510-00-281-5235.
Pencil, Fine-Line Writing (IB), 7510-00-286-5755, 7510-00-286-5750, 7510-00-286-5751.
Pencil, Woodcased, with Imprinting (IB), 7510-050-8LP-6521.
Pocket Planning Set (SH), 7510-01-119-6369 (1984), 7510-01-119-6370 (1985).
Portfolio (IB), 7510-00-558-1572, 7510-00-558-1573, 7510-00-995-4856, 7510-00-995-4852, 7510-00-584-2489, 7510-00-584-2490, 7510-00-584-2491, 7510-00-584-2492.
Refill, Ballpoint Pen (IB), 7510-00-543-6792, 7510-00-543-6793, 7510-00-754-2687, 7510-00-543-6795, 7510-00-754-2688, 7510-00-754-2689.
Refill, List Finder, Automatic (SH), 7510-00-285-2800.
Refill, Pocket Planning Set (SH), 7510-01-113-2079.
Sheath, Pen and Pencil (IB), 7510-00-052-2664.

Class 7520

Arch Board File (IB), 7520-00-240-5498, 7520-00-191-1075, 7520-00-255-7081.
Ballpoint Pen (IB), 7520-00-935-7136, 7520-00-935-7135, 7520-00-543-7149.
Ballpoint Pen, Stick-type (IB), 7520-01-058-9978, 7520-01-058-9977, 7520-01-058-9976, 7520-01-059-4125, 7520-01-060-5820, 7520-01-058-9975, 7520-01-060-8513, 7520-01-060-5821.
Ballpoint Pen, with Imprinting (IB), 7520-050-8LP-6520.
Book Ends (IB), 7520-00-264-5479, 7520-00-139-6158.
Box, Filing (SH), 7520-00-285-3147, 7520-00-285-3143, 7520-00-285-3144, 7520-00-285-3145, 7520-00-285-3146, 7520-00-285-3148.
Case, Maintenance and Operational Manuals (IB), 7520-00-559-9618.
Clipboard, File (IB), 7520-00-281-5918, 7520-00-254-4610, 7520-00-240-5503.
Easel, Display & Training (IB), 7520-00-579-7013.

File, Horizontal Desk (SH), 7520-00-139-4869, 7520-00-728-5761.
Holder, Desk Memorandum (IB), 7520-00-139-3802, 7520-00-290-6445.
Marker, Tube Type (IB), 7520-00-973-1059, 7520-00-973-1060, 7520-00-079-0285, 7520-00-973-1061, 7520-00-079-0286, 7520-00-079-0287, 7520-00-973-1062, 7520-00-079-0288, 7520-00-558-1501, 7520-00-904-1265, 7520-00-904-1268, 7520-00-935-0979, 7520-00-904-1267, 7520-00-935-0981, 7520-00-935-0982, 7520-00-904-1266, 7520-00-935-0980, 7520-00-051-5031, 7520-00-051-5035, 7520-00-116-2888, 7520-00-051-5036, 7520-00-116-2886, 7520-00-116-2889, 7520-00-051-5033, 7520-00-116-2887, 7520-00-904-4476.
Pen Set, Desk (IB), 7520-00-106-9840.
Pencil, Mechanical (IB), 7520-00-223-6672, 7520-00-223-6673, 7520-00-268-9913, 7520-00-223-6675, 7520-00-223-6676, 7520-00-285-5826, 7520-00-285-5822, 7520-00-285-5823, 7520-00-161-5664, 7520-00-164-8950, 7520-00-268-9915, 7520-00-285-5818, 7520-00-268-9916, 7520-00-724-5606, 7520-00-590-1878, 7520-00-132-4996.
Perforator, Paper, Desk (SH), 7520-00-139-4101, 7520-00-263-3425.
Stand, Calendar Pad (IB), 7520-00-162-6153, 7520-00-162-6156, Rgns 4, 5, 6, 7, 8, 9, 10, 7520-00-139-4341.
Tray, Desk (SH), 7520-00-232-6828, 7520-00-286-5801, 7520-00-285-5043.
Trimmer, Paper (IB), 7520-00-224-7620, Rgns 1, 2, 3, W, 4, 5, 6, 7, 7520-00-224-7621, 7520-00-163-2568, 7520-00-634-4675, 7520-00-282-2137.

Class 7530

Card, Guide, File (IB), 7530-00-989-0184, 7530-00-989-2425, 7530-00-988-6541, 7530-00-988-6542, 7530-00-988-6543, 7530-00-988-6549, 7530-00-988-6550, 7530-00-988-6551, 7530-00-988-6544, 7530-00-988-6545, 7530-00-988-6546, 7530-00-988-6547, 7530-00-988-6548, 7530-00-988-6515, 7530-00-988-6516, 7530-00-988-6520, 7530-00-988-6521, 7530-00-988-6517, 7530-00-988-6518, 7530-00-988-6522.
Card, Index (IB), 7530-00-238-4316, 7530-00-244-7453, 7530-00-244-7456, 7530-00-244-7451, 7530-00-244-7459, 7530-00-238-4319, 7530-00-949-2787, 7530-00-238-4331, 7530-00-243-9436, 7530-00-247-0310, 7530-00-281-1315, 7530-00-247-0318, 7530-00-264-3723, 7530-00-247-0311, 7530-00-244-7447, 7530-00-247-0315, 7530-00-243-9437.
Card-Set, Guide, File (IB), 7530-00-989-0698, 7530-00-989-0697, 7530-00-989-0683, 7530-00-082-2635, 7530-00-989-0684, 7530-00-989-0686, 7530-00-989-0692, 7530-00-989-0694, 7530-00-989-0693, 7530-00-989-0695.
Envelope, Wallet (IB), 7530-00-281-5976, 7530-00-281-4844, 7530-00-281-4846.
Folder, File, Military Personnel Records Jacket (IB), 7530—DA Form 201.
Folder, File (IB), 7530-00-889-3555, 7530-00-559-4512, 7530-00-281-5907, 7530-00-281-5908, 7530-00-926-8978, 7530-00-273-9845, 7530-00-926-8980, 7530-00-926-8981, 7530-00-286-6924, 7530-00-926-8982, 7530-00-926-8983, 7530-00-926-8984, 7530-00-043-1194, 7530-00-739-7723.
Folder-Set, File (IB), 7530-00-286-6923, 7530-00-286-7080, 7530-00-286-7244, 7530-00-286-7253, 7530-00-286-7286, 7530-00-286-7287, 7530-00-286-8570, 7530-00-286-8571, 7530-00-286-6925.
Jacket, Filing, Wallet (IB), 7530-00-285-2915.
Notebook, Stenographer's (IB), 7530-00-223-7939.
Pad, Writing Paper (IB), 7530-00-285-3090, Rgn 1, 5 & 6, 7530-00-239-8479, All Regions, 7530-01-131-1889, All Regions, 7530-01-124-5660, Rgn W,1,3,4,5,6,7,8, 7530-01-131-0091, Rgn W,1,3,4,5,6,7,8, 7530-01-124-7632, Rgn W,1,2,3,5,7.
Pad, Writing Paper (Easel) (IB), 7530-00-619-8880.
Paper Set, Manifold and Carbon (IB), 7530-00-880-9154, Rgn W,6,7, 7530-00-401-6910, Rgn W,4,6,7,9, 7530-01-072-2536, Rgn W,4,6,7,9, 7530-01-072-2537, Rgn W,4,6,7,9, 7530-01-072-2538, Rgn W,4,6,7,9, 7530-01-072-2539, Rgn W,4,6,7,9, 7530-00-205-0511, Rgn W,6,7.
Paper, Carbon, Typewriter (IB), 7530-00-244-4035, Rgn 1,2,3,6,7,8.
Paper, Looseleaf, Blank (IB), 7530-00-286-5777, 7530-00-286-5778, 7530-00-286-5782, 7530-00-286-5780, 7530-00-286-5781, 7530-00-286-5779.
Paper, Looseleaf, Ruled (IB), 7530-00-286-6366, 7530-00-286-4332, 7530-00-286-4331, 7530-00-286-4333, 7530-00-286-4334, 7530-00-286-4335, 7530-00-198-6265, 7530-00-286-4336, 7530-00-286-4337, 7530-00-286-4338, 7530-00-286-4339.
Paper, Teletypewriter, Roll (IB), 7530-00-019-6674, 7530-00-019-6931, 7530-00-019-7267, 7530-00-019-7463, 7530-00-223-7966, 7530-00-056-2900, 7530-00-721-9691, 7530-00-223-7969, 7530-00-262-9178, 7530-00-142-9037, 7530-00-943-7076.
Paper, Writing (IB), 7530-00-285-5836, 7530-00-047-3738.
Refill, Appointment Book (SH), 7530-01-125-5927 (1984), 7530-01-125-0985 (1985).
Tape, Paper, Computing Machine (IB), 7530-00-286-9052, 7530-00-222-3455, 7530-00-286-9053, 7530-00-286-9054, 7530-00-238-3852, 7530-00-222-3456, 7530-00-286-9055.

Class 7690

Decalcomania, ¾" Black (SH), 7690-00-329-0538 FOR OFFICIAL USE ONLY.
Decalcomania, 1" Black (SH), 7690-00-857-9572 MAX SPEED, 7690-00-857-9573 NO RIDERS, 7690-00-857-9574 NO SMOKING, 7690-00-857-9575 U.S. ARMY.
Decalcomania, 1" White Lusterless (SH), 7690-00-857-9660, MAX SPEED, 7690-00-857-9662, NO SMOKING, 7690-00-857-9663, U.S. ARMY.
Decalcomania, 1½" Black (SH), 7690-00-857-9698, MAX SPEED, 7690-00-857-9699, NO RIDERS, 7690-00-857-9700, NO SMOKING.
Decalcomania, 1½" White Lusterless (SH), 7690-00-857-9611, MAX SPEED, 7690-00-857-9612, NO RIDERS, 7690-00-857-9613, NO SMOKING, 7690-00-857-9614, U.S. ARMY.
Decalcomania, 2" Black (SH), 7690-00-858-3403, NO SMOKING, 7690-00-858-3405, U.S. ARMY.
Decalcomania, 2" White Lusterless (SH), 7690-00-858-3365, NO SMOKING, 7690-00-858-3366, U.S. ARMY.
Decalcomania, 3" Black (SH), 7690-00-311-7272, NO SMOKING, 7690-00-311-7276, U.S. ARMY.
Decalcomania, 3" White Lusterless (SH), 7690-00-310-6672, NO SMOKING, 7690-00-310-9208, U.S. ARMY.
Decalcomania, 4" Black (SH), 7690-00-328-9507, MAX SPEED, 7690-00-328-9517, U.S. ARMY.
Decalcomania, 4" White Lusterless (SH), 7690-00-329-0204, MAX SPEED, 7690-00-329-0205, NO SMOKING, 7690-00-329-0206, U.S. ARMY.
Decalcomania, Numbers and Letters (SH), 7690—1½", 7690—2", 7690-00-311-7128—3", 7690—4".
Folder, Chapel Program (SH), 7690-00-NSH-0001, Wright-Patterson Air Force Base, OH only.
Illustrative Sheet (SH), 7690-00-NSH-0002, Wright-Patterson Air Force Base, OH only.

Class 7910

Pad, Floor Polishing Machine (IB), 7910-00-685-6686, 7910-00-685-6687, 7910-00-685-3908, 7910-00-685-6671, 7910-00-685-3909, 7910-00-685-6672, 7910-00-685-3910, 7910-00-685-6656, 7910-00-685-6657, 7910-00-685-3912, 7910-00-685-6659, 7910-00-685-3915, 7910-00-685-6660, 7910-00-685-3914, 7910-00-685-4239, 7910-00-685-4240, 7910-00-685-4242, 7910-00-685-4243, 7910-00-685-4241, 7910-00-685-4244, 7910-00-685-4245, 7910-00-820-7991, 7910-00-820-7989, 7910-00-820-7990, 7910-00-820-9926, 7910-00-820-9925, 7910-00-820-9924, 7910-00-820-9898, 7910-00-820-7997, 7910-00-820-7996, 7910-00-820-9903, 7910-00-820-9904, 7910-00-820-9905, 7910-00-820-9900, 7910-00-820-9901, 7910-00-820-9899, 7910-00-820-9922, 7910-00-820-9918, 7910-00-820-9917, 7910-00-820-9916, 7910-00-820-9915, 7910-00-820-9914, 7910-00-820-9913, 7910-00-820-9912, 7910-00-820-9911, 7910-00-820-9910.

Class 7920

Broom, Push (IB), 7920-00-267-2967.
Broom, Upright (IB), 7920-00-292-4371, 7920-00-292-4375, 7920-00-292-4372, 7920-00-291-8305.
Broom, Whisk (IB), 7920-00-240-6350.
Brush, Chassis and Running Gear (IB), 7920-00-255-7536.
Brush, Cleaning, Aircraft (IB), 7920-00-051-4384.
Brush, Dusting (IB), 7920-00-178-8315.
Brush, Floor Sweeping (IB), 7920-00-243-3407, 7920-00-292-2363, 7920-00-292-2367, 7920-00-264-4638, 7920-00-292-2362, 7920-00-292-2365.
Brush, Sanitary (IB), 7920-00-772-5800, 7920-00-234-9317.
Brush, Scrub (IB), 7920-00-240-7174, 7920-00-951-8795, 7920-00-282-2470, Tampico Fibers, 7920-00-282-2470, Styrene Fibers, 7920-00-297-1511, 7920-00-619-9162, 7920-00-061-0038.
Brush, Shoe and Stove (IB), 7920-00-852-8170.
Brush, Wire, Scratch (IB), 7920-00-291-5815, 7920-00-282-9246, 7920-00-246-8501, 7920-00-223-7649.
Brush, Wire, Stainless Steel (IB), 7920-00-958-1157.
Brush-Set, Shoe and Stove (IB), 7920-00-205-0200.
Cloth, Polishing (IB), 7920-00-205-1656, 7920-00-205-3170, 7920-00-664-0103.

Cloth, Wiping ("Jean Cotton") (SH), 7920-LL-L01-0013, 7920-LL-L01-0014, Portsmouth Naval Shipyard, Portsmouth, NH only.
Cloth, Wiping (SH), 7920-LL-L03-6103, Pearl Harbor Naval Shipyard, Pearl Harbor, HI. only.
Handle, Mop (IB), 7920-00-205-1168, 7920-00-267-1218, 7920-00-205-1167, 7920-00-550-9902, 7920-00-550-9911, 7920-00-550-9912, 7920-00-998-2485, 7920-00-998-2486, 7920-00-851-0140, 7920-00-851-0142, 7920-00-246-0930, 7920-00-205-1170.
Handle, Paint Roller (IB), 7920-00-682-6512.
Handle, Wood (IB), 7920-00-177-5106, 7920-00-141-5452, 7920-00-263-0328.
Kit, Aircraft Cleaning (IB), 7920-00-490-6046.
Mop, Dusting, Cotton (IB), 7920-00-205-0481, 7920-00-205-0483, 7920-00-205-0484, 7920-00-245-8289.
Mop, Wet (IB), 7920-00-224-8726.
Mop, Wet, Cellulose, Complete (IB), 7920-00-432-7117, 7920-00-728-1167.
Mop, Wet, Cellulose, Sponge Refill (IB), 7920-00-471-2876.
Mophead, Dusting, Cotton (IB), 7920-00-634-0201, 7920-00-267-4921, 7920-00-998-2482, 7920-00-998-2483, 7920-00-998-2484, 7920-00-851-0141, 7920-00-205-0485, 7920-00-205-0487, 7920-00-205-0488.
Mophead, Wet (IB), 7920-00-205-0425, 7920-00-205-0426, 7920-00-141-5549, 7920-00-171-1148, 7920-00-141-5550, 7920-00-141-5547, 7920-00-141-5548, 7920-00-141-5544, 7920-00-926-5492, 7920-00-926-5493, 7920-00-926-5494, 7920-00-926-5495, 7920-00-926-5496, 7920-00-926-5497, 7920-00-926-5498, 7920-00-926-5499, 7920-00-926-5501, 7920-00-926-5502.
Pad, Scouring (IB), 7920-00-753-5242, 7920-00-151-6120.
Scraper and Squeegee (IB), 7920-00-045-2556.
Sponge, Cellulose (IB), 7920-00-161-6219, 7920-00-633-9928, 7920-00-240-2559, 7920-00-884-1116, 7920-00-884-1115, 7920-00-633-9905, 7920-00-240-2555, 7920-00-633-9906.
Sponge, Plastic (IB), 7920-00-633-9908, 7920-00-633-9911, 7920-00-633-9915, 7920-00-685-4152.
Squeegee (SH), 7920-00-224-8339.
Towel, Machinery Wiping (IB), 7920-00-260-1279.
Towel, Paper (IB), 7920-00-823-9772 Rgn 4, 6, 7, 7920-00-823-9773.

Class 7930

Cloth, Filter (SH), 7930-00-NSH-0001, Naval Supply Center, WA only.
Detergent, General Purpose (IB), 7930-00-926-5280, 7930-00-357-7386, 7930-00-068-1669, 7930-01-055-6122, 7930-00-177-5243, 7930-00-985-6945, 7930-00-985-6946, 7930-00-530-8067, 7930-00-527-1207, 7930-00-527-1237.
Dishwashing Compound, Hand (IB), 7930-00-880-4454, 7930-01-055-6136, 7930-00-899-9534.
Glass Cleaner (IB), 7930-00-664-6910.
Rinse Additive, Dishwashing (IB), 7930-00-619-9573, 7930-00-619-9575.

Class 8105

Bag, Assembly, Crew Relief (IB), 8105-00-922-9469.
Bag, Cloth (IB), 8105-00-282-8183.
Bag, Cotton (IB), 8105-00-183-6981, 8105-00-281-3924, 8105-00-183-6982, 8105-00-179-0089, 8105-00-271-1511, 8105-00-183-6985, 8105-00-174-0836, 8105-00-183-6989, 8105-00-290-3360.
Bag, Evidence (IB), 8105-00-NIB-0001, 8105-00-NIB-0002, 8105-00-NIB-0003, 8105-00-NIB-0004, 8105-00-NIB-0005.
Bag, Lunch (SH), 8105-00-664-3715.
Bag, Motion Sickness (IB), 8105-00-835-7212.
Bag, Plastic (SH), 8105-00-NSH-0001, 8105-00-NSH-0002, 8105-00-NSH-0003, 8105-00-NSH-0004, Naval Weapons Support Center, Crane, IN only.
Coin Bags (SH), 8105-00-NSH-0005 50% of Gov't requirement, 8105-00-NSH-0006 50% of Gov't requirement, 8105-00-NSH-0008 50% of Gov't requirement, 8105-00-NSH-0009 50% of Gov't requirement, 8105-00-NSH-0010 50% of Gov't requirement, 8105-00-NSH-0011 50% of Gov't requirement, 8105-00-NSH-0012 50% of Gov't requirement.

Class 8110

Tube, Mailing and Filing (SH), 8110-00-412-4410.

Class 8115

Box, Set-Up, Mailing Dental (IB), 8115-00-511-5750.
Box, Shipping (IB), 8115-00-787-2142, 8115-00-787-2147, 8115-00-101-7647, 8115-00-101-7638, 8115-00-787-2146, 8115-00-787-2148, 8115-01-019-4085, 8115-01-019-4084, 8115-01-057-1244, 8115-01-057-1243, 8115-01-057-1245.
Box, Wood (SH), 8115-00-935-5887, 8115-00-935-6518, 8115-00-935-6525, 8115-00-935-6526, 8115-00-935-6527, 8115-00-935-6528, 8115-00-935-6530, 8115-00-935-6532, 8115-00-935-6531.
Box, Wood, Nailed (SH), 8115-00-NOO-0019, Pine Bluff Arsenal, AR only.

Class 8135

Block, Currency Packing (IB), BEP Stock# L-1391.
Chipboard (IB), 8135-00-290-0336, 8135-00-782-3948, 8135-00-782-3951.

Class 8315

Sewing Kit (SH), 8315-01-096-4460, 8315-01-090-5823.

Class 8340

Line, Tent (SH), 8340-00-263-0255.
Pin, Tent, Aluminum (SH), 8340-00-261-9749.
Pin, Tent, Wood (SH), 8340-00-261-9750, 8340-00-261-9751.
Pole Section, Tent (SH), 8340-00-223-7849.
Shelter Half, Tent, Incomplete (SH), 8340-00-577-4168.

Class 8345

Case, Flag, Interment (IB), 8345-00-782-3010.
Flag, Signal (IB), 8345-00-935-0588, 8345-00-935-0589, 8345-00-935-0590, 8345-00-935-0591, 8345-00-935-0592, 8345-00-935-0594, 8345-00-935-0595, 8345-00-935-0597, 8345-00-935-0598, 8345-00-935-0599, 8345-00-935-0602, 8345-00-935-0604, 8345-00-935-0607, 8345-00-935-0608, 8345-00-935-0633, 8345-00-935-1840, 8345-00-935-0634, 8345-00-935-0638, 8345-00-935-0639, 8345-00-935-0640, 8345-00-926-9977, 8345-00-926-9216, 8345-00-926-9978, 8345-00-926-6804, 8345-00-926-6806, 8345-00-926-9979, 8345-00-926-6807, 8345-00-926-6809, 8345-00-926-9980, 8345-00-926-9219, 8345-00-935-0582, 8345-00-926-9984, 8345-00-926-6003, 8345-00-926-9985, 8345-00-935-0619, 8345-00-935-1839, 8345-00-935-0620, 8345-00-935-0623, 8345-00-935-0409, 8345-00-935-0624, 8345-00-935-0445, 8345-00-926-6803, 8345-00-935-0446, 8345-00-926-6805, 8345-00-935-0447, 8345-00-926-9987, 8345-00-935-0448, 8345-00-926-6810, 8345-00-926-9988, 8345-00-935-0450, 8345-00-935-0451, 8345-00-935-0453, 8345-00-926-6002, 8345-00-926-6814, 8345-00-935-0436, 8345-00-935-0437, 8345-00-935-0438, 8345-00-935-0408, 8345-00-935-0441, 8345-00-935-0442, 8345-00-935-0464, 8345-00-935-0465, 8345-00-935-0466, 8345-00-935-0467, 8345-00-935-0468, 8345-00-935-0470, 8345-00-935-0471, 8345-00-935-0473, 8345-00-935-0474, 8345-00-935-0475, 8345-00-935-0478, 8345-00-935-0480, 8345-00-935-0483, 8345-00-935-0484, 8345-00-935-0626, 8345-00-935-1838, 8345-00-935-0627, 8345-00-935-0407, 8345-00-935-0630, 8345-00-935-0631.
Flag, Signal, Vehicle, Danger Red (IB), 8345-00-260-2724.
Pennant, Signal, and Special Flags (IB), 8345-00-935-0420, 8345-00-935-0517, 8345-00-935-4755, 8345-00-825-1847, 8345-00-935-3201, 8345-00-935-4756, 8345-00-935-0522, 8345-00-914-6086, 8345-00-935-4753, 8345-00-935-4754, 8345-00-935-0404, 8345-00-935-0514, 8345-00-825-1868, 8345-00-935-0406, 8345-00-935-0509, 8345-00-926-5988, 8345-00-935-0512, 8345-00-921-4497, 8345-00-935-3199, 8345-00-825-1839, 8345-00-935-0526, 8345-00-914-6076, 8345-00-914-6080, 8345-00-914-6083, 8345-00-935-0524, 8345-00-926-5987, 8345-00-926-5989, 8345-00-935-0539, 8345-00-926-5991, 8345-00-825-1840, 8345-00-935-0521, 8345-00-914-6087, 8345-00-926-6026, 8345-00-935-0403, 8345-00-935-0536, 8345-00-926-9210, 8345-00-926-9213, 8345-00-926-6028, 8345-00-935-0508, 8345-00-935-0519, 8345-00-935-0415, 8345-00-914-6085, 8345-00-926-9215, 8345-00-935-0411, 8345-00-926-9212, 8345-00-914-7411, 8345-00-914-6079, 8345-00-914-6082, 8345-00-935-0523, 8345-00-935-0417, 8345-00-926-5990, 8345-00-935-0421, 8345-00-926-9207, 8345-00-935-0542, 8345-00-935-0520, 8345-00-935-0492, 8345-00-935-0493, 8345-00-926-9214, 8345-00-935-0513, 8345-00-935-0490, 8345-00-935-0495, 8345-00-926-9208, 8345-00-935-0518, 8345-00-935-0511, 8345-00-914-6084, 8345-00-935-0405, 8345-00-935-0410, 8345-00-935-0525, 8345-00-914-6075, 8345-00-914-6077, 8345-00-914-6081, 8345-00-935-0419, 8345-00-935-0416, 8345-00-935-0537, 8345-00-935-0538, 8345-00-935-0540, 8345-00-935-0541, 8345-00-926-9211, 8345-00-935-0499, 8345-00-935-0500, 8345-00-935-0501, 8345-00-825-1818, 8345-00-935-0497, 8345-00-935-0504, 8345-00-935-1841, 8345-00-935-0418, 8345-00-825-1819, 8345-00-926-1551, 8345-00-935-0503, 8345-00-935-0534, 8345-00-935-1843, 8345-00-926-1548, 8345-00-926-1549, 8345-00-926-1552.

Class 8405

Cover, Service Cap (IB), 8405-01-046-8544, 8405-01-046-8545.
Strap, Chin (SH), 8405-00-152-3952.

Class 8415

Apron, Construction Worker's (IB), 8415-00-205-3895, 8415-00-257-4290.
Apron, Food Handling (IB), 8415-00-255-8577, 8415-00-634-0205, 8415-00-051-1173, 8415-01-045-0587.
Apron, Food Handling (SH), 8415-00-899-3026.
Apron, Impermeable (SH), 8415-00-082-6108.
Apron, Laboratory (SH), 8415-00-634-5023.
Band, Helmet, Camouflage (IB), 8415-01-110-9981.
Cap, Food Handler's (IB), 8415-00-234-7677, 8415-00-234-7678, 8415-00-234-7679.
Cover, Helmet (IB), 8415-00-105-0605.
Cover, Helmet, Camouflage Pattern (IB), 8415-00-092-7514, 8415-01-092-7515.
Hood, Anti-Flash (SH), 8415-00-275-3159.
Hood, Spray Painter's Protective (SH), 8415-00-NSH-0001, Pearl Harbor Naval Shipyard, HI only.
Mask, Extreme Cold Weather (SH), 8415-00-243-9844; 8415-01-006-3468.
Pad, Helmet; Flight Deck Crewman's (IB), 8415-00-178-6830; 8415-00-178-6831.
Socks, Extreme Cold Weather (SH), 8415-00-177-7992, 8415-00-177-7993, 8415-00-177-7994, 8415-01-057-3503.
Traffic Safety Clothing (See Class 8465 also) (IB), 8415-00-177-4978, 8415-00-177-4974.

Class 8430

Footwear Cover (IB), 8430-00-890-2079, 8430-00-580-1205, 8430-00-580-1206, 8430-00-591-1359.
Slide Fastener Unit, Laced Boot (IB), 8430-00-465-1888, 8430-00-465-1889, 8430-00-465-1890.

Class 8440

Belt, Coat (IB), 8440-00-964-3978, 8440-00-261-4966, 8440-00-261-4965.
Belt, Trousers (IB), 8440-00-270-0535, 8440-00-412-2309, 8440-00-573-1666, 8440-00-270-0536, 8440-00-412-2312, 8440-00-573-1765, 8440-00-270-0537, 8440-00-412-2314, 8440-00-573-3727, 8440-00-290-0567, 8440-01-052-9738, 8440-00-290-0568, 8440-01-052-9739, 8440-00-269-5311, 8440-01-052-9740, 8440-00-634-5632, 8440-00-753-6363, 8440-00-577-4177, 8440-00-753-6364, 8440-00-577-4178, 8440-00-753-6365, 8440-00-270-0541, 8440-00-412-2326, 8440-00-270-0542, 8440-00-412-2341, 8440-00-270-0543, 8440-00-412-2342, 8440-01-009-9290, 8440-01-009-9292, 8440-01-009-9293.
Neckerchief (IB), 8440-01-076-0779.
Neckerchief, Camouflage, Desert (IB), 8440-01-103-5981, 8440-01-148-4549.
Necktie (IB), 8440-00-216-6130, 8440-00-316-2519, 8440-00-555-7194.
Scarf, Man's Wool (SH), 8440-01-005-2558, 8440-00-160-6843, 8440-00-823-7520.
Suspenders, Trousers (IB), 8440-00-221-0852.

Class 8445

Belt, Trousers, Cotton (IB), 8445-01-068-8339, 8445-01-068-8340.
Scarf, Neckwear (IB), 8445-00-549-5363.

Class 8455

Holder, Identification (IB), 8455-00-898-9730.
Scarf, Branch of Service (IB), 8455-00-916-8398, 8455-00-405-2294, 8455-00-985-7336, 8455-01-078-0745.

Class 8460

Kit Bag, Flyer's (IB), 8460-00-606-8366.

Class 8465

Bag, Barrack (IB), 8465-00-530-3692.
Bag, Laundry (SH), 8465-00-616-9676.
Bag, Laundry, Self-Closing, Ropeless (SH), 8465-00-656-0816.
Bag, Sleeping, Firefighter's (IB), 8465-00-081-0798.
Bag, Soiled Clothes (SH), 8465-00-122-3869.
Bag, Soiled Clothes, Submarine (IB), 8465-00-762-7671.
Belt, Individual, Equipment, Nylon, LC-2 (IB), 8465-00-001-6487, 8465-00-001-6488, 8465-01-120-0674, 8465-01-120-0675.
Belt, M.P. (IB), 8465-00-527-8843.
Binding, Snowshoe, Universal (IB), 8465-00-965-2175.
Carrier, Intrenching Tool (IB), 8465-00-001-6474.
Case, Field, First Aid (IB), 8465-00-935-6814.
Case, Maintenance Equipment, Small Arms (IB), 8465-00-781-9564.
Case, Map and Note, Field (SH), 8465-00-634-1903.
Clipboard, Pilot's (SH), 8465-01-012-9174.
Clothes Stop (IB), 8465-00-377-5701.
Cover, Field Pack, Camouflage (IB), 8465-01-103-0659.
Cover, Field Pack; Camouflage; White (SH), 8465-00-001-6478.
Cover, Water Canteen (IB), 8465-00-118-4956.
Fieldpack, Canvas (SH), 8465-00-205-3493.
Hood, Sleeping Bag (IB), 8465-00-518-2769.
Lanyard, Pistol (SH), 8465-00-262-5237, 8465-00-965-1705.
Necklace, Personnel, Identification (SH), 8465-00-261-6629.
Pocket, Ammunition Magazine (IB), 8465-00-782-2239; 8465-00-261-4983.
Protector, Trousers, Pistol Holster (IB), 8465-00-682-6741.
Strap, Waist, with Pad, LC-2 (IB), 8465-01-075-8164.
Strap, Webbing, Cargo, Tie-Down (IB), 8465-00-001-6477.
Strap, Webbing, Waist, LC-1 (IB), 8465-00-269-0481.
Suspenders, Individual Equipment Belt (IB), 8465-00-001-6471.
Traffic Safety Clothing (See Class 8415 also) (IB), 8465-00-177-4977, 8465-00-177-4976, 8465-00-177-4975.
Whistle, Ball, Plastic (IB), 8465-00-254-8803.

Class 8470

Headband, Ground Troop, Helmet Liner (IB), 8470-00-153-6671, Mechanicsburg, PA and Richmond, VA only.
Headband, Ground Troops'/Parachutists' Helmet (IB), 8470-01-092-8493, 8470-01-092-8492.
Neckband, G.T., Helmet Liner (IB), 8470-00-753-6166.
Pad, Parachutists' Helmet (IB), 8470-01-092-8494.
Strap, Chin, Ground Troops'/Parachutists' Helmet (IB), 8470-01-092-7534.
Strap, Chin, Parachutist Steel Helmet (IB), 8470-00-032-2737.
Strap, Retention, Parachutists' Helmet (IB), 8470-01-092-7524.
Strap, Soldier's Steel Helmet M-1 (IB), 8470-00-030-8003.
Suspension Assembly, Liner, Helmet (IB), 8470-00-880-8814.
Suspension Assembly, Ground Troops'/Parachutists' (IB), 8470-01-092-7516, 8470-01-092-7517, 8470-01-092-7518, 8470-01-092-7519.

Class 8520

Soap, Toilet (IB), 8520-00-228-0598, 8520-01-058-7463, 8520-00-141-2519.

Class 8970

Food Packet, Survival, Aircraft, Life Raft, Indiv. (SH), 8970-01-028-9406.

Class 9905

Plate, Marking, Blank (SH), 9905-00-473-6336.
Sign-Kit, Vehicle (SH), 9905-00-565-6267.
Tag, Key (SH), 9905-00-245-7826.
Tag, Marker (SH), 9905-00-537-8954, 9905-00-537-8955, 9905-00-537-8956, 9905-00-537-8957.
Tree Shade (SH), 9905-00-NSH-0001, 8" x 12", 9905-00-NSH-0153, 8" x 16", (Fiberboard), BLM and U.S. Forest Service, Washington and Oregon only.

Class 9920

Ash Receiver, Tobacco (IB), 9920-00-682-6757.
Cleaner, Tobacco Pipe (SH), 9920-00-292-9946.

U.S. Postal Service Items

Decalcomania, P.S., 1" Lusterless White (SH)
P.S. Item No. 669-L, TP
P.S. Item No. 666-L, TP-40
P.S. Item No. 672-L, TP-45
P.S. Item No. 667-L, TP-50
P.S. Item No. 675-L, TP-65
P.S. Item No. 668-L, TP-70
P.S. Item No. 622-L, LIFT HERE
Decalcomania, P.S., 1" Gloss White (SH)
P.S. Item No. 635, NO RIDERS
Decalcomania, P.S., 1½" Gloss White (SH)
P.S. Item No. 600, U.S. ARMY
P.S. Item No. 633, MAX SPEED
P.S. Item No. 636, NO RIDERS
Decalcomania, P.S., 2" Gloss White (SH)
P.S. Item No. 607, U.S. ARMY
Divider, Separation (SH)
P.S. Item No. 01037-A
P.S. Item No. 01037-B
Lead Seal with Cord Attachment (SH)
P.S. Item No. 0815
Marker, I.D., Plastic (SH)
P.S. Item No. 01036
P.S. Item No. 01036-A
P.S. Item No. 01036-B
P.S. Item No. 01036-C
P.S. Item No. 01036-D
P.S. Item No. 01036-E
P.S. Item No. 01036-F
Pallet, Material Handling (SH)
3990-00-NSH-0008 (62" x 48")
Rqmts of the U.S. Postal Service, Western Area Supply Center
Pocket, Leather (SH)
P.S. Item No. D-1200-G
Safety Guard, SH
P.S. Item No. 01075-B
Seal, Metal Band (SH)
P.S. Item No. 0816-A
P.S. Item No. 0816-B
Seat Assembly, Complete (SH)
P.S. Item No. 054-A
Seat Cover (SH)
P.S. Item No. 054-B

Strap, Mail Tray (IB)
P.S. Item No. 01067
Strap, Tie, Mail Carrier's, with Buckle (IB)
P.S. Item No. D-1216-D
P.S. Item No. D-1216-E
P.S. Item No. D-1216-F

Military Resale Commodities

Procedures for ordering military resale commodities are contained in Section 51-5.6, Code of Federal Regulations, Title 41.

Stock No. and Item Name

050 Roller ball pen, red (Optional packaging) (IB)
051 Roller ball pen, blue (Optional packaging) (IB)
052 Roller ball pen, black (Optional packaging) (IB)
053 Retractable pen, black (Optional packaging) (IB)
054 Retractable pen, blue (Optional packaging) (IB)
055 Ultra fine tip pen, red (Optional packaging) (IB)
056 Ultra fine tip pen, blue (Optional packaging) (IB)
057 Ultra fine tip pen, black (Optional packaging) (IB)
060 Roller ball pen, red (IB)
061 Roller ball pen, blue (IB)
062 Roller ball pen, black (IB)
063 Retractable pen, black (IB)
064 Retractable pen, blue (IB)
065 Ultra fine tip marker, red (IB)
066 Ultra fine tip marker, blue (IB)
067 Ultra fine tip marker, black (IB)
068 Pencil, mechanical, 0.5 mm lead (IB)
500 Room air freshner (IB)
501 Deodorizer, toilet bowl (IB)
510 Cleaner, all purpose (IB)
520 Fabric softener sheets, reusable, 8¾ x 4" (IB)
541 Scrubber, bathroom, with handle (IB)
542 Scrubber, kitchen, with handle (IB)
543 Scrubber, grill & garage, with handle (IB)
544 Scrubber, nylon net over polyurethane pad (IB)
554 Scrubber, nylon, rectangular (IB)
555 Scrubber, kitchen, 4⅝ x 3⅛ x 1 3/16" (IB)
556 Scrubber, bathroom, 4⅝ x 3 3/16 x 1 3/16" (IB)
557 Scrubber, general household, 6⅜ x 3 4/16 x 1" (IB)
563 Scrubber, plastic, for teflon (IB)
564 Scrubber, stainless steel (IB)
568 Board, ironing, table top (IB)
570 Clothespins, plastic (IB)
574 Clothesline, plastic, rayon reinforced, 100-ft. (IB)
575 Sponge, cellulose, 5½ x 3⅝ x 1⅛" (IB)
576 Sponge, cellublose, 7⅜ x 4 x 1¾" (IB)
577 Sponge, cellulose, 5½ x 3⅝ x 1" (IB)
578 Sponge, cellulose, 5-1/2 x 3-5/8 x 5/8" (IB)
593 Sponge, bath, circular (IB)
594 Swatter, fly, plastic (IB)
596 Cutlery set, plastic, heavy duty (8 ea. knives, forks, spoons) (IB)
597 Knives, plastic, heavy duty (IB)
598 Forks, plastic, heavy duty (IB)
599 Spoons, plastic, heavy duty (IB)
600 Trowel, transplanter (IB)
601 Trowel, regular (IB)
602 Cultivator (IB)
603 Weeder (IB)
604 Grass shears (IB)
605 Pruning shears (IB)
720 Paint roller cover, economy, 7" (IB)
721 Paint roller cover, economy, 9" (IB)
722 Paint roller cover, all purpose, 7" (IB)
723 Paint roller cover, all purpose, 9" (IB)
724 Paint roller cover, for textured surfaces, 7" (IB)
725 Paint roller cover, for textured surfaces, 9" (IB)
726 Paint roller cover, high pile, 7" (IB)
727 Paint roller cover, high pile, 9" (IB)
728 Paint roller cover, for gloss or semi-gloss, 7" (IB)
729 Paint roller cover, for gloss or semi-gloss, 9" (IB)
730 Paint roller cover, for rough surfaces, 9" (IB)
731 Paint roller cover, for rough surfaces, 7" (IB)
732 Paint roller cover, mohair fiber, 7" (IB)
733 Paint roller cover, mohair fiber, 9" (IB)
735 Trimmer, paint roller, with frame, 3" (IB)
736 Refill, trimmer, paint roller, 3" (IB)
741 Paint roller, frame assembly, 7" (IB)
742 Paint roller, frame assembly, 9" (IB)
901 Broom, mixed fiber (IB)
902 Broom, push, indoor/outdoor, 54" handle (IB)
903 Broom, parlor, corn, medium weight (IB)
904 Broom, corn, plastic cap (IB)
905 Broom, plastic filament, flagged ends (IB)
907 Broom, plastic filament, angle cut (IB)
908 Broom, plastic filament, angle tilt (IB)
909 Broom, whisk, corn (IB)
910 Broom, whisk, plastic (IB)
912 Brush, lint, plastic filament (IB)
914 Brush, barbecue, with scraper (IB)
915 Brush, counter, plastic (IB)
916 Brush, bowl, sanitary, nylon filament (IB)
918 Brush, scrub, household (IB)
919 Brush, scrub, plastic block, vinly filament (IB)
920 Handle, mop, spring lever, for wet mopheads (IB)
922 Applicator, wax, foam block (IB)
923 Mop, automatic, block sponge (IB)
924 Mop, block sponge, with scrub strip brush (IB)
925 Mop, dusting, nylon (IB)
926 Mop, stick, orlon/rayon yarn, wet (IB)
927 Mop, stick, rayon yarn, wet (IB)
928 Mop, stick, cotton yarn, wet (IB)
933 Refill, mop, automatic, block sponge, for 923 (IB)
934 Refill, mop, block sponge, for 924 (IB)
936 Mophead, orlon/rayon yarn, wet (IB)
937 Mophead, cotton yarn, wet (IB)
941 Cloth, dish, knitted cotton (IB)
945 Towel, kitchen, cotton (IB)
946 Potholder, quilted, cotton (IB)
949 Mitt, oven, quilted, cotton (IB)
950 Mop, dish and bottle, wood handle (IB)
951 Mop, glass and dish, plastic handle (IB)
955 Brush, vegetable/utility, plastic filament (IB)
956 Brush, bottle, nylon filament (IB)
957 Brush, dish and pan, nylon filament (IB)
959 Brush, pastry and basting (IB)
962 Cover, ironing board, silicone and pad, poly foam (IB)
964 Cover, ironing board, silicone, double coated (IB)
965 Cover, ironing board, color coated (IB)
970 Bag, washing Machine, nylon with zipper (IB)
980 Cloth, all purpose, cotton (IB)
983 Coth, dusting (IB)
986 Cloth, wash, face (IB)
995 Dustpan, plastic (IB)

Services

These services are identified by industrial group number as provided in the Standard Industrial Classification Manual prepared by the Technical Committee on Industrial Classification, Statistical Policy Division, Office of Management and Budget.

SIC 0782

Grounds Maintenance

Department of Air Force:
Edwards Air Force Base, California, for Chapel Bldg. 2700; Hospital Bldgs. 2430, 3920, 5500, 5510; Veterinary Bldg. 5550; Recreational Fields Bldgs. 2201, 5201, 5208, 5213; Bldgs. 1200, 1220, 1400, 1440, 2650, 2656, 2800, 3940; P-1 Area; Four New Athletic Fields: Softball, Little League, Soccer (Practice), Little League (Practice) (SH)
Bergstrom Air Force Base, Texas, for the following AFRES units: Buildings: 1601, 4204, 4515, 4526, 4527, 4531, 4534, 4535, 4545, 4567, 4556, 4562, 4582, 4589, Apron "D"; Hospital Bldg. 2700; Veterinary Bldg. 914; Portable Buildings: 2, 9, 12, 13, 18, 19, 20, 59, 61 (SH)
Department of Army:
Fort Ord, California, for Silas B. Hays Army Hospital; Officer's Open Mess; Headquarters Area & Welcome Center; Golf Course (Mowing); Football Field; Multipurpose Field; Durham Field; Soper Field; Bowling Alley, Building #3015; Babe Ruth Field (SH)
U.S. Army Reserve Facility-Portland (South), Sears Hall, 2731 SW Multnomah Boulevard, Portland, Oregon (SH)
U.S. Army Reserve Facility-Portland (West), Sharff Hall, 8801 N. Chautauqua Boulevard, Portland, Oregon (SH)
Fort Lawton, Washington, for Cemetery Grounds (includes opening and closing of graves) (SH)
U.S. Army Reserve Facility, Mann Hall, N. 4415 Market Street, Spokane, Washington (SH)
U.S. Army Reserve Facility, N. 3800 Sullivan Road, Trentwood, Washington (SH)
Vancouver, Army Barracks, Vancouver, Washington (SH)
Department of Commerce: National Oceanic and Atmospheric Administration, Seattle, Washington, for National Marine Fisheries Service, 2725 Montlake Boulevard East (SH)
Department of Energy: Morgantown Energy Technology Center, Morgantown, West Virginia (SH)
Department of Interior: National Park Service, Washington, D.C., for LBJ Memorial Grove; Constitution Gardens (SH)
Department of Navy:
Naval Weapons Center, China Lake, California (SH)

Mare Island Naval Shipyard, California, for Combat Systems Technical School Command (SH)
Naval Air Station, Miramar, California, for Parcel Areas: A, B, C, E, I, J, K, L, M, N (SH)
Naval Postgraduate School, Monterey, California (SH)
Naval Ordnance Station, Indian Head, Maryland, for Nonindustrial Area (SH)
Naval Weapons Station, Yorktown, Virginia, for Kirkpatrick Park; Administraiton Bldg. No. 31 and Gate No. 1; Missile Park; Dispensary Area; Skiff Creek Area; Officer's Club Bldg. 58; Bldg. 380A, Bldg. 380B, Credit Union; Industrial Areas; Area 10 (Parkway Gate 18 and surrounding area); Area 11 (Chapel and Child Care area); Area 12 (NOSTRA) (SH)
Naval Air Station, Whidbey Island, Washington (SH)
Department of Transportation:
Federal Aviation Administration, Ronkonkoma, New York, for Air Route Traffic Control Center (SH)
Federal Aviation Administration, Westbury, New York, for New York TRACON Facility (SH)
Federal Aviation Administration, Leesburg, Virginia, for Air Route Traffic Control Center (SH)
Department of Treasury: U.S. Secret Service, Beltsville, Maryland, for Special Training Building and Complex (SH)
General Services Administration:
Federal Sevice Center, 4747 Eastern Avenue, Bell, California (SH)
Federal Building and U.S. Post Office, 11000 Wilshire Boulevard, Los Angeles, California (SH)
Social Security Administration Complex, 6401 Security Boulevard, Baltimore, Maryland (SH)
U.S. Custom House, 6 World Trade Center, New York, New York (SH)
Federal Building, 1002 N.E. Holladay, Portland, Oregon (SH)
Federal Building, 1220 S.W. Third, Portland, Oregon (SH)
Pioneer Courthouse, 520 S.W. Morrison, Portland, Oregon (SH)
U.S. Courthouse, 620 S.W. Main, Portland, Oregon (SH)
Federal Building, 500 West 12th, Vancouver, Washington (SH)

SIC 0851

Seedling Harvesting

Department of Agriculture: Forest Service, McKinleyville, California, for Humboldt Nursery (SH)

SIC 5812

Catering Service

Department of Army: New Cumberland, Pennsylvania, for New Cumberland Army Depot, Military Entrance Processing Station, Building 521 (SH)

SIC 5947

Operation of Visitors Center Gift Shop

Department of Treasury: Bureau of Engraving and Printing, 14th & C Streets, S.W., Washington, D.C. (SH)

Food Service

Department of Air Force: Sheppard Air Force Base, Texas (SH)

SIC 7218

Laundry

Department of Army: U.S. Army Medical Materiel Agency, Fort Detrick, Maryland (SH)
Department of Navy: Naval Training Center, Great Lakes, Illinois (SH)

SIC 7331

Mailing

Department of Agriculture: Washington, D.C. (Metropolitan area) (SH)
Department of Commerce:
National Oceanic and Atmospheric Administration, Rockville, Maryland, for National Marine Fisheries Service, Fisheries Development Division, F21; Procurement & Grants Management Division, 6010 Executive Boulevard; Public Affairs Administration, Public Affairs; Printing & Distribution Branch, 11400 Rockville Pike; Distribution Section, 12227 Wilkins Avenue (SH)
National Technical Information Services, 5285 Port Royal Road, Springfield, Virginia (SH)
Department of Defense: Defense Supply Service, National Committee for Employer Support for Guard and Reserve, 1117 N. 19th Street, Arlington, Virginia (SH)
Department of Education: Office for Civil Rights, Office of Program Review & Assistance, 330 C Street, SW., Washington, D.C. (SH)
Department of Energy: Distribution, 12th & Pennsylvania Avenue, NW., Washington, D.C. (SH)
Department of Health and Human Services:
Office of the Secretary, Washington, D.C. (SH)
National Institutes of Health, Bethesda, Maryland (SH)
Alcohol, Drug Abuse, and Mental Health Administration, Rockville, Maryland (SH)
Food and Drug Administration, Rockville, Maryland (SH)
Health Resources Administration, Rockville, Maryland (SH)
Health Services Administration, Rockville, Maryland (SH)
Office of Assistant Secretary for Health, Rockville, Maryland (SH)
Department of Housing and Urban Development: Washington, D.C. (SH)
Department of Interior:
18th & C Streets, NW., Washington, D.C. (SH)
U.S. Geological Survey, Reston, Virginia, for Publications Division, Branch of Technical Editing, Eastern Region; TOPO Division, 12201 Sunrise Valley Drive (SH)
Department of Labor:
200 Constitution Avenue, NW., Washington, D.C. (SH)
Manpower Administration, Washington, D.C. (SH)
President's Committee on Employment of the Handicapped, Washington, D.C. (SH)
Department of Transportation:
National Highway Traffic Administration, 400 7th Street, SW., Washington, D.C. (SH)
Office of the Secretary, Distribution Unit, 400 7th Street, SW., Washington, D.C. (SH)
Department of Treasury:
Bureau of Engraving and Printing, 14th & C Streets, SW., Washington, D.C. (SH)
Bureau of Public Debt, 14th & C Streets, SW., Washington, D.C. (SH)
Architectural and Trasnportation Barriers Compliance Board: 330 C Street, SW., Washington, D.C. (SH)
Environmental Protection Agency: Specialized Procurement Unit, 401 M Street, SW., Washington, D.C. (SH)
Federal Election Commission: 1325 K Street, NW., Washington, D.C. (SH)
Federal Trade Commission: Pennsylvania Avenue & 6th Street, NW., Washington, D.C. (SH)
General Services Administration: National Archives & Records Services, 7th & Pennsylvania Avenue, NW., Washington, D.C. (SH)
Library of Congress: Washington, D.C. (SH)
Merit Systems Protection Board: Office of Special Counsel, 1120 Vermont Avenue, NW., Washington, D.C. (SH)
National Credit Union Administration: Printing Service, 1375 K Street, NW., Washington, D.C. (SH)
National Science Foundation: 1800 G Street, NW., Washington, D.C. (SH)
Office of Personnel Management: 1900 E Street, NW., Washington, D.C. (SH)
Smithsonian Institute: Supply Division, Washington, D.C. (SH)
U.S. Commission on Civil Rights: 1211 Vermont Avenue, NW. Washington, D.C. (SH)
U.S. Consumer Product Safety Commission: Washington, D.C. (SH)
U.S. Information Agency: 400 C Street, SW., Washington, D.C. (SH)
U.S. Metric Board: 1815 N. Lynn Street, Arlington, Virginia (SH)

Tax Form Order Fulfillment

Department of Treasury: Internal Revenue Service, Buffalo, New York (SH)

SIC 7332

Photocopying

Department of Agriculture: National Agricultural Library Building, Beltsville, Maryland (SH)

SIC 7349

Cardboard and Paper Scrap Recovery

Department of Army: New Cumberland Army Depot, Pennsylvania (SH)

Janitorial Custodial

Department of Agriculture:
Forest Service, Sequoia National Forest, Porterville, California, for Supervisor's office, Smith Building (New Wing), 900 W. Grand Avenue; Warehouse Complex, 480 N. Henrahan Avenue (SH)
Forest Service, Coeur d'Alene, Idaho, for Coeur d'Alene Nursery, 3600 Nursery Road (SH)
Department of Air Force:

Bergstrom Air Force Base, Texas, for Buildings 713, 734, 2004, 2108 and 2600 (Chapel) (SH)
Ellsworth Air Force Base, South Dakota (SH)
Fairchild Air Force Base, Washington, for Resistance Training (Bldg. 1212); Survival Classroom (Bldg. 1228); Survival Wing Headquarters (Bldg. 1324); Survival Clinic and SQ. HQ (Bldg. 1334); Field Training Laboratory (Bldg. 1342); Exhibits Lab and Library (Bldg. 1207); Alert Building 2080, Area A and Area B; Alert Trailers; Family Visitation Center (Bldg. 2092); Military Family Housing Office (Bldg. 2451B); Audit Agency Office (Bldg. 2245); 47 Air Division Headquarters (Bldg. 2285); Civilian Personnel Office and NAF (Bldg. 2245); Red Cross Office (Bldg. 2245); Base Library (Bldg. 716); Base Chapel (Bldg. 4200); Base Education Center (Bldg. 2365); Base Social Actions Office (Bldg. 3509); Base OSI (Bldg. 5025); Base Education Trailers; SACMET Office (Bldg. 2001B); Civilian Post Office (Bldg. 644); Air Recovery & Rescue Squadron (Bldg. 2036); Water Survival Classrooms (Bldg. 2249C); Academics (Bldg. 1224); Administration Office (Bldg. 1302); Gym (Bldg. 1306); Lab Rooms (Bldgs. 1336 and 1344); Post Office/Common Areas (Bldg. 1348); SATAF Offices (Bldg. 2248D); Child Care Center (Bldg. 2301); Corps of Engineers Office (Bldg. 2451A) (SH)
Department of Army:
U.S. Army Reserve Center, Memorial Parkway, Huntsville, Alabama (SH)
Fort McNair, Washington, D.C. for National Defense University, Health Fitness (SH)
Pentagon Officers Athletic Center, The Pentagon, Washington, D.C. (SH)
U.S. Army Reserve Center, John Williams Street, Attleboro, Massachusetts (SH)
U.S. Army Reserve Center, Belmont & Manley Streets, Brockton, Massachusetts (SH)
U.S. Army Reserve Center, 915 W. Chestnut Street, Brockton, Massachusetts (SH)
U.S. Army Reserve Center, Buildings 85 and 90, Hingham, Massachusetts (SH)
U.S. Army Reserve Center, 675 American Legion Highway, Roslindale, Massachusetts (SH)
U.S. Army Reserve Center, 130 Eldridge Street, Taunton, Massachusetts (SH)
U.S. Army Reserve Center, Fort Snelling, Minnesota (SH)
U.S. Readiness Group, Fort Snelling, Minnesota (SH)
U.S. Army Reserve Center, Fort Drum, New York (SH)
U.S. Army Reserve Center, 111 Finney Boulevard, Malone, New York (SH)
U.S. Army Reserve Center, Burrstone Road, Utica, New York (SH)
Lewisville Lake Park, Lewisville, Texas (SH)
U.S. Army Reserve Center, Butler Farm Road, Hampton, Virginia (SH)
U.S. Army Reserve Center, Marcella Road, Hampton, Virginia (SH)
U.S. Army Reserve Center, Williamsburg, Virginia (SH)
Hiram M. Chittenden Locks, Seattle, Washington (SH)
Vancouver Army Barracks, Vancouver, Washington (SH)
Yakima Firing Center, Yakima, Washington (SH)
Department of Defense: DCASR Building B-95, Marietta, Georgia, for Lockheed Complex, 805 Walker Street; AF Plant 6, 612 Tinker Street (SH)
Department of Energy:
Computer Science Center; Technical Support Building; Technical Support Addition, 550 Second Street, Idaho Falls, Idaho (SH)
Morgantown Energy Technology Center, Morgantown, West Virginia (SH)
Department of Interior:
Bureau of Land Management, Roseburg, Oregon, for District Building (SH)
Bureau of Land Management, Salem, Oregon, for Salem District Office, 1717 Fabry Road, S.E. (SH)
Department of Navy:
Naval Air Station Miramar, California (SH)
Naval and Marine Corps Reserve Center, Jackson, Mississippi (SH)
Naval and Marine Corps Reserve Center, Newport News, Virginia (SH)
Naval Air Station, Whidbey Island, Washington, for Buildings 12, 18, 20, 22, 34, 100, 103, 108, 110, 113, 116, 119, 124, 126, 180, 220, 243, 365, 369, 371, 374, 375, 376, 377, 380, 381, 385, 286, 960, 961, 975, 994, 2546, 2547, 2551 (SH)
Department of Transportation:
Federal Aviation Administration, Westbury, Long Island, New York, for TRACON Facility (SH)
Federal Aviation Administration Facilities, Spokane, Washington, for Air Traffic Control Tower Building and adjacent TRACON Building including connecting enclosed walkway, FAA NAVAIDS Communication Building 1300, Spokane International Airport; Felts Field for Air Traffic Control Tower, Flight Service Station, General Aviation District Office (SH)
Department of Treasury: Bureau of Engraving and Printing Annex Building, 14th & C Streets, S.W., Washington, D.C. (SH)
General Services Administration:
Federal Building, 3rd Avenue and 1st Street, Cullman, Alabama (SH)
Federal Building and U.S. Courthouse, 15 Lee Street, Montgomery, Alabama (SH)
Federal Building and Courthouse, 1340 West 6th Street, Los Angeles, California (SH)
Food and Drug Administration Building, 1521-33 West Pico Boulevard, Los Angeles, California (SH)
Federal Building, 801 I Street, Sacramento, California (SH)
Denver Federal Center, Building 85, Denver, Colorado (SH)
Federal Building, 275 Peachtree Street, N.E., Atlanta, Georgia (SH)
U.S. Court of Appeals, Forsyth & Walton Streets, Atlanta, Georgia (SH)
Federal Building, Moultrie, Georgia (SH)
Federal Building, U.S. Post Office, and U.S. Courthouse, Thomasville, Georgia (SH)
Federal Building, U.S. Post Office, 304 N. 8th, Boise, Idaho (SH)
Federal Building and U.S. Courthouse, 205 4th Street, Coeur d'Alene, Idaho (SH)
Federal Parking Facility, 450 South Federal Street, Chicago, Illinois (SH)
Interagency Motor Pool, 701 South Clinton Street, Chicago, Illinois (SH)
U.S. Customhouse, 610 South Canal Street, Chicago, Illinois (SH)
OSHA Training Center, 1555 Times Drive, Des Plaines, Illinois (SH)
Federal Building and U.S. Courthouse, 101 First Street, S.E., Cedar Rapids, Iowa (SH)
Leased Space, 603-11 East 2nd Street, Des Moines, Iowa (SH)
U.S. Courthouse, 123 East Walnut Street, Des Moines, Iowa (SH)
Federal Building, 400 South Clinton, Iowa City, Iowa (SH)
Federal Building (U.S. Post Office and Courthouse), 330 Shawnee, Leavenworth, Kansas (SH)
Federal Building, U.S. Post Office, U.S. Courthouse, Frederica and 5th Streets, Owensboro, Kentucky (SH)
U.S. Federal Building & Post Office, 212 Harlow, Bangor, Maine (SH)
Roth Building, Social Security Administration Complex, 5536 Caswell Road, Baltimore, Maryland (SH)
Social Security Administration, Computer Center Building, 6201 Security Boulevard, Baltimore, Maryland (SH)
John W. McCormack Post Office and Courthouse, Post Office Square, Boston, Massachusetts (SH)
U.S. Custom House, 8 McKinley Square, Boston, Massachusetts (SH)
GSA Depot Building 58, Hingham Industrial Park, 349 Lincoln Street, Hingham, Massachusetts (SH)
Springfield Federal Building, Main and Bridge Streets, Springfield, Massachusetts (SH)
Federal Records Center, 380 Trapelo Road, Waltham, Massachusetts (SH)
Waltham Federal Center, 424 Trapelo Road, Waltham, Massachusetts (SH)
Gerald R. Ford Museum, 303 Pearl Street, N.W., Grand Rapids, Michigan (SH)
Federal Building, U.S. Post Office, and U.S. Courthouse, Main and Poplar Streets, Greenville, Mississippi (SH)
Federal Building, U.S. Post Office, 200 East Washington Street, Greenwood, Mississippi (SH)
William M. Colmer Federal Building—Courthouse, 701 Main Street, Hattiesburg, Mississippi (SH)
Federal Building, 100 West Capitol Street, Jackson, Mississippi (SH)
Federal Building & U.S. Courthouse, 100 Centennial Mall North, Lincoln, Nebraska (SH)
Social Security Administration District Office Building, 22 Morris Street, Hackensack, New Jersey (SH)
Social Security Administration District Office Building, 868 Nye Avenue, Irvington, New Jersey (SH)
Social Security Administration District Office Building, 396 Bloomfield Avenue, Montclair, New Jersey (SH)
Federal Building, 3rd & Hill Avenue, Gallup, New Mexico (SH)

Leo W. O'Brien Federal Building, Clinton Avenue & N. Pearl Street, Albany, New York (SH)
Federal Building, 111 West Huron, Buffalo, New York (SH)
U.S. Customs, 160-19 Rockaway Boulevard, Jamaica, New York (SH)
Internal Revenue Service, 120 Church Street, New York, New York (SH)
U.S. Courthouse Annex, 1 St. Andrews Plaza, New York, New York (SH)
U.S. Courthouse, 40 Foley Square, New York, New York (SH)
Federal Building, 45 Bay Street, Staten Island, New York (SH)
U.S. Courthouse and Federal Building, Broad and Catherine Streets, Utica, New York (SH)
Federal Building, 125 South Main Street, Muskogee, Oklahoma (SH)
Federal Building, U.S. Courthouse, 211 East 7th Avenue, Eugene, Oregon (SH)
Federal Building, 511 NW., Broadway, Portland, Oregon (SH)
Federal Building, Bonneville Power Administration, 1002 NE., Holladay Street, Portland, Oregon (SH)
Federal Warehouse, 2760 NW. Yeon Avenue, Portland, Oregon (SH)
Lloyd Group Buildings, Portland, Oregon, at following locations: 630 NE. Holladay Street; 830 NE. Holladay Street; 729 NE. Oregon Street; 811 NE. Oregon Street; 827 NE. Oregon Street (SH)
Pioneer Courthouse, 520 SW. Morrison, Portland, Oregon (SH)
Federal Office Building, Cass & Stephens Streets, Roseburg, Oregon (SH)
Federal Building, 6th & State Streets, Erie, Pennsylvania (SH)
Federal Building/U.S. Court House, 515 9th Street, Rapid City, South Dakota (SH)
Federal Building-U.S. Courthouse, 400 South Phillips Street, Sioux Falls, South Dakota
Armed Forces Examining Station and Bureau of Mines Building, 1100 Filmore Street, Amarillo, Texas (SH)
J. Marvin Jones Federal Building and U.S. Courthouse, 295 E. 5th Street, Amarillo, Texas (SH)
Border Stations, Bridge of the Americas, Paso Del Norte, Good Neighbor Bridge and Cotton Classing Building, El Paso, Texas (SH)
Forest Service Building, 507 25th Street, Ogden, Utah (SH)
Administration Building, Salt Lake City, Utah (SH)
The Charles Building, Salt Lake City, Utah (SH)
Executive Terminal Building, Salt Lake City, Utah (SH)
GSA Motor Pool Building, Salt Lake City, Utah (SH)
The Maurice Building, Salt Lake City, Utah (SH)
U.S. Post Office, Salt Lake City, Utah (SH)
U.S. Customs House, 101 E. Main Street, Norfolk, Virginia (SH)
U.S. Post Office and Courthouse, 600 Granby Mall, Norfolk, Virginia (SH)
Federal Building, 400 N. 8th Street, Richmond, Virginia (SH)
GSA Center, Buildings 811 and 812, Auburn, Washington (SH)
Federal Building, 3002 Colby Avenue, Everett, Washington (SH)
Federal Center, 25th & Dover Streets, Moses Lake, Washington (SH)
Federal Building, U.S. Post Office, 403 West Lewis Street, Pasco, Washington (SH)
Federal Archives and Records Center, 6125 Sandpoint Way, Seattle, Washington (SH)
Federal Building, Immigration and Naturalization Services, 815 Airport Way, Seattle, Washington (SH)
Federal Building, U.S. Post Office, W. 904 Riverside, Spokane, Washington (SH)
Federal Building, 500 W. 12th Street, Vancouver, Washington (SH)
Federal Center, Buildings 603, 604, 609, 610, 611, 612, 613, 613A, 616, 617, 618, 619, 620, 621, Walla Walla, Washington (SH)
Smithsonian Institution:
National Zoological Park, Washington, D.C.
Smithsonian Institution Service Center, 1111 North Capitol Street, NE., Washington, D.C. (SH)
Paul E. Garber Complex, 3904 Old Silver Hill Road, Suitland, Maryland (SH)
U.S. Marine Corps:
Quantico, Virginia, for Marine Corps Development and Education Command, Buildings 2034, 2079, 3035, 3098, 3400 (SH)
U.S. Postal Service: Mailbag Facility, 7600 West Roosevelt Road, Forest Park, Illinois (SH)
Veterans Administration: Veterans Administration Medical Center, Building #32, Dublin, Georgia (SH)

Janitorial/Elevator Operator

Department of Treasury: Bureau of Engraving and Printing, Washington, D.C., for Public Debt Building (SH)
General Services Administration:
Veterans Administration Clinic Building, 17 Court Street, Boston, Massachusetts (SH)
Federal Building, 35 Ryerson Street, Brooklyn, New York (SH)
Federal Building, 201 Varick Street, New York, New York (SH)
Veterans Administration Building, 252 Seventh Avenue, New York, New York (SH)

SIC 7369

Food Service Attendant

Department of Army:
Consolidated Enlisted Dining Facility, Building 61, Fort McPherson, Georgia (SH)
Seneca Army Depot, Romulus, New York (SH)

Commissary Shelf Stocking

Department of Navy:
Naval Air Station, Alameda, California (SH)
Naval Station, Long Beach, California (SH)
Naval Air Station, Moffett Field, California (SH)
Naval Air Station, Point Mugu, California (SH)
Naval Station, Treasure Island, San Francisco, California (SH)
Mare Island Naval Shipyard, Vallejo, California (SH)
Naval Air Station, Barbers Point, Oahu, Hawaii (SH)
Naval Base, Pearl Harbor, Hawaii (SH)
Naval Training Center, Great Lakes, Illinois (SH)
Naval Air Station, Brunswick, Maine (SH)
Naval Air Station, Patuxent River, Maryland (SH)
Naval Construction Battalion Center, Gulfport, Mississippi (SH)
Naval Air Station, Fallon, Nevada (SH)
Naval Administrative Unit, Scotia, New York (SH)
Naval Station, Roosevelt Roads, Puerto Rico (SH)
Naval Education Training Center, Newport, Rhode Island (SH)
Naval Station and Naval Weapons Station, Charleston, South Carolina (SH)
Naval Station, Norfolk, Virginia (SH)
Naval Air Station, Oceana, Virginia Beach, Virginia (SH)
Naval Submarine Base, Bangor, Washington (SH)
Naval Air Station, Whidbey Island, Oak Harbor, Washington (SH)
Naval Support Activity, Sand Point, Seattle, Washington (SH)

Commissary Shelf Stocking and Custodial Service

Department of Air Force:
Gunter Air Force Station, Alabama (SH)
Maxwell Air Force Base, Alabama (SH)
Little Rock Air Force Base, Arkansas (SH)
Homestead Air Force Base, Florida (SH)
Robins Air Force Base, Georgia (SH)
Mountain Home Air Force Base, Idaho (SH)
McConnell Air Force Base, Kansas (SH)
Hanscom Air Force Base, Massachusetts (SH)
Nellis Air Force Base, Nevada (SH)
Lackland Air Force Base, Texas (SH)
Sheppard Air Force Base, Texas (SH)

SIC 7374

Keypunch and Verification

General Services Administration: GSA Region 2, Automated Telecommunication Service, Data Services Division (SH)

SIC 7399

Assembly

Department of Defense:
Belt, Trousers (IB)
Food Packet, Long Range Patrol (8970-00-926-9222) (SH)
Food Packet, Survival, Abandon Ship (8970-00-299-1395) (IB)
Food Packet, Survival, General-Purpose, Individual (8970-00-082-5665) (IB)
General Services Administration: Living Kit, Basic and Supplemental (SH)

Bursting and Packaging of Commemorative Stamps

U.S. Postal Service: Washington, D.C. (SH)

Currency Packaging

Department of Treasury: Bureau of Engraving and Printing, Washington, D.C. (SH)

Microfilming Contract Files

Department of Navy: OICC Trident, Bremerton, Washington (SH)

Microfilm Reproduction

Department of Navy: Naval Submarine Base Bangor, Silverdale, Washington (SH)

Packaging

General Services Administration: Canteen, Water, Disposable (8465-01-062-5854), GSA Region 8, Denver, Colorado (SH)

Parts Sorting

Department of Air Force: Hill Air Force Base, Utah (SH)

Repair of Air Cargo Pallet Top and Side Nets

Department of Air Force:
- Wright-Patterson Air Force Base, Ohio (SH)
- McChord Air Force Base, Washington (SH)

Sewing

Department of Army: Redstone Arsenal, Alabama (Provide specified end items produced through use of customized, heavy-duty sewing service) (SH)

Shrink Wrapping Gift Packages

U.S. Postal Service: Washington, D.C. (SH)

SIC 7542

Carwash

Department of Interior: Bureau of Land Management, Medford District Office, 3040 Biddle Road, Medford, Oregon (SH)

SIC 7641

Furniture Rehabilitation

General Services Administration:
- Altus Air Force Base, Oklahoma (SH)
- Lawton, Oklahoma including Fort Sill (SH)
- Oklahoma City, Oklahoma, plus 25-mile radius, including FAA and Tinker Air Force Base (SH)
- San Antonio, Texas, plus 40-mile radius (SH)
- Wichita Falls, Texas, including Sheppard Air Force Base (SH)
- Spokane, Washington, plus 30-mile radius (SH)

Metal Furniture Rehabilitation

Department of Navy: Naval Ordnance Station, Lousiville, Kentucky (IB)

SIC 7699

Drill Sharpening

Department of Navy: Naval Supply Center, San Diego, California (SH)

Mattress and Box Spring Rehabilitation (IB)

General Services Administration: Orders for renovated mattresses may be arranged through GSA regional offices. IB will provide requirements for mattress and box spring renovation for GSA Regions W, 2, 3, 4, 5, 6, 7, and 8 only.

Pallet Repair

Department of Navy:
- Naval Supply Center, Norfolk, Virginia (SH)
- Naval Supply Center, Cheatham Annex, Williamsburg, Virginia (SH)
- Naval Supply Center, Puget Sound, Bremerton, Washington (SH)

Repair and Maintenance of Electric Typewriters Only

General Services Administration:
- Health and Human Services, 300 S. Wacker Drive, Chicago, Illinois (SH)
- Railroad Retirement Board, 844 N. Rush Street, Chicago, Illinois (SH)
- Social Security Adminstration, 600 W. Madison, Chicago, Illinois (SH)
- Syracuse, New York (including Onondaga County) (SH)

Repair and Maintenance of Manual Typewritrs Only

General Services Administration: Federal Court House Building, Syracuse, New York (SH)

Repair of Rubberized Items

Department of Army:
- Mattress Pneumatic (Noninsulated 8465-00-254-8887), Fort Bliss, Texas (SH)
- Mattress Pneumatic (Insulated 8465-000-518-2781), Fort Bliss, Texas (SH)
- Ponchos (8405-00-935-3257, Fort Bliss, Texas (SH)
- Bag Clothing, Waterproof (8465-00-261-6909), Fort Bliss, Texas (SH)

Sponge Rubber Mattresses Rehabilitation

General Services Administration: Requirements for GSA Region 3 (IB)

SIC 9199

Administrative Services

Department of Commerce: Herbert Hoover Building, 14th & Constitution Avenue, N.W., Washington, D.C. (SH)

Environmental Protection Agency:
- Marfair Building, Washington, D.C. (SH)
- Waterside Mall Complex, Washington, D.C. (SH)
- 345 Courtland Street, N.E., Atlanta, Georgia (SH)
- General Services Branch, 230 South Dearborn Street, Chicago, Illinois (SH)
- Beltsville Research Laboratory, Beltsville, Maryland (SH)
- 6100 Executive Boulevard, Rockville, Maryland (SH)
- 26 Federal Plaza, New York, New York (SH)
- 6th and Walnut Street, Philadelphia, Pennsylvania (SH)
- Crystal Mall Complex, Arlington, Virginia (SH)

Publications Distribution

Department of Navy: Naval Construction Battalion Center, Gulfport, Mississippi (SH)

[FR Doc. 83-28332 Filed 10-17-83; 8:45 am]

BILLING CODE 6820-33-M

federal register

Tuesday
October 18, 1983

Part IX

Office of Management and Budget

Cumulative Report on Rescissions and Deferrals

OFFICE OF MANAGEMENT AND BUDGET

Cumulative Report on Rescissions and Deferrals

October 1, 1983.

This report is submitted in fulfillment of the requirements of Section 1014(e) of the Impoundment Control Act of 1974 (Pub. L. 93-344). Section 1014(e) provides for a monthly report listing all budget authority for this fiscal year with respect to which, as of the first day of the month, a special message has been transmitted to the Congress.

This report gives the status as of October 1, 1983 of 20 deferrals contained in the first special message of FY 1984. This message was actually transmitted to the Congress on October 3, 1983.

Rescissions (Table A)

No rescission proposals are currently pending before the Congress.

Deferrals (Table B and Attachment A)

As of October 1, 1983, $1,909.5 million in 1983 budget authority was being deferred from obligation and another $15.2 million in 1983 outlays was being deferred from expenditure. Attachment A shows the history and status of each deferral reported during FY 1984.

Information from special messages

The special message containing information on the deferrals covered by the cumulative report is printed in the **Federal Register** listed below:

Vol. 48, FR p. 45730, Thursday, October 6, 1983.

David A. Stockman,

Director, Office of Management and Budget.

BILLING CODE 3110-01-M

TABLE A

STATUS OF 1984 RESCISSIONS

	Amount (In millions of dollars)
Rescissions proposed by the President.....	-0-
Accepted by the Congress.....	-0-
Rejected by the Congress.....	-0-
Pending before the Congress.....	$ -0-

****

TABLE B

STATUS OF 1984 DEFERRALS

	Amount (In millions of dollars)
Deferrals proposed by the President.....	$1,924.7
Routine Executive releases through October 1, 1983	-0-
Overturned by the Congress.....	-0-
Currently before the Congress.....	$1,924.7 a/

a/ This amount includes $15.2 million in outlays for a Department of the Treasury deferral (D84-16).

Attachments

Attachment A - Status of Deferrals - Fiscal Year 1984

As of October 1, 1983 Amounts in Thousands of Dollars Agency/Bureau/Account	Deferral Number	Amount Transmitted Original Request	Amount Transmitted Subsequent Change	Date of Message	Cumulative OMB/Agency Releases	Congressionally Required Releases	Congressional Action	Cumulative Adjustments	Amount Deferred as of 10-1-83
FUNDS APPROPRIATED TO THE PRESIDENT									
Appalachian regional development programs	D84-1	10000		10-3-83					10000
DEPARTMENT OF AGRICULTURE									
Forest Service									
Timber salvage sales	D84-2	6211		10-3-83					6211
Expenses, brush disposal	D84-3	42674		10-3-83					42674
DEPARTMENT OF COMMERCE									
National Oceanic and Atmospheric Administration									
Promote and develop fishery products and research pertaining to American fisheries	D84-4	33600		10-3-83					33600
DEPARTMENT OF DEFENSE - MILITARY									
Military construction, all services	D84-5	414597		10-3-83					414597
Family housing, Air Force	D84-6	53000		10-3-83					53000
DEPARTMENT OF DEFENSE - CIVIL									
Wildlife conservation, military reservations									
Wildlife conservation	D84-7	777		10-3-83					777
DEPARTMENT OF ENERGY									
Energy programs									
Uranium supply and enrichment activities	D84-8	130000		10-3-83					130000
DEPARTMENT OF HEALTH AND HUMAN SERVICES									
Office of the Assistant Secretary of Health									
Scientific activities overseas (special foreign currency program)	D84-9	6463		10-3-83					6463
Social Security Administration									
Limitation on administrative expenses (construction)	D84-10	10571		10-3-83					10571

As of October 1, 1983 Amounts in Thousands of Dollars Agency/Bureau/Account	Deferral Number	Amount Transmitted Original Request	Amount Transmitted Subsequent Change	Date of Message	Cumulative OMB/Agency Releases	Congressionally Required Releases	Congressional Action	Cumulative Adjustments	Amount Deferred as of 10-1-83
DEPARTMENT OF THE INTERIOR									
Minerals Management Service									
Payments for proceeds, sale of water, Mineral Leasing Act of 1920	D84-11	48		10-3-83					48
DEPARTMENT OF STATE									
United States emergency refugee and migration assistance fund	D84-12	37928		10-3-83					37928
United States bilateral science and technology agreements	D84-13	2000		10-3-83					2000
DEPARTMENT OF TRANSPORTATION									
Federal Aviation Administration									
Facilities and equipment (airport and airway trust fund	D84-14	1083268		10-3-83					1083268
DEPARTMENT OF THE TREASURY									
Office of Revenue Sharing									
State and local government fiscal assistance trust fund	D84-15	56068		10-3-83					56068
State and local government fiscal assistance trust fund	D84-16	15209		10-3-83					15209
OTHER INDEPENDENT AGENCIES									
Pennsylvania Avenue Development Corporation									
Land acquisition and development fund	D84-17	13148		10-3-83					13148
Railroad Retirement Board									
Milwaukee Railroad restructuring administration	D84-18	85		10-3-83					85
Tennessee Valley Authority									
Tennessee Valley Authority fund	D84-19	7000		10-3-83					7000
United States Railway Association									
Administrative expenses	D84-20	2050		10-3-83					2050
TOTAL, DEFERRALS		1,924,697[a]							1,924,697 [a]

[a] All of the above amounts represent budget authority except one general revenue sharing deferral of outlays only.

[FR Doc. 83-28246 Filed 10-17-83; 8:45 am]
BILLING CODE 3110-01-C

federal register

Tuesday
October 18, 1983

Part X

Environmental Protection Agency

2,4,5-T and Silex Products; Intent To Cancel Registrations, Revocation of Notices of Intent To Hold a Hearing, and Statement of Enforcement Policy

ENVIRONMENTAL PROTECTION AGENCY

[OPP-66103 PH-FRL 2454-3]

2,4,5-T and Silvex Products; Intent To Cancel Registrations of Pesticide Products Containing 2,4,5-T and Silvex; Revocation of Notices of Intent To Hold a Hearing To Determine Whether Certain Uses of 2,4,5-T or Silvex Should Be Cancelled

AGENCY: Environmental Protection Agency (EPA).

ACTION: Notice of Intent to Cancel Registrations; Revocation of Notices of Intent to Hold a Hearing.

SUMMARY: Pursuant to section 6(b)(1) of the Federal Insecticide, Fungicide, and Rodenticide Act (FIFRA), 7 U.S.C. 136d(b)(1), the Environmental Protection Agency is issuing a notice of intent to cancel the registrations of all products which contain as an active ingredient 2,4,5-trichlorophenoxy-acetic acid (2,4,5-T) or 2-(2,4,5-trichlorophenoxy) propionic acid (silvex) or any salt, ester, amine, or other derivative of 2,4,5-T or silvex (2,4,5-T and silvex products) and which are labeled for manufacturing use, or labeled for end use on any site not already the subject of the notices of intent to cancel issued on March 15, 1979. EPA is also revoking the notices (previously issued pursuant to FIFRA section 6(b)(2)) of intent to hold a hearing to determine whether the products labeled for the above end uses of 2,4,5-T and silvex should be cancelled.

FOR FURTHER INFORMATION CONTACT: Patricia A. Roberts, Pesticides and Toxic Substances Division (LE-132P), Office of General Counsel, Environmental Protection Agency, Room W-513, 401 M St. SW., Washington, D.C. 20460 (202-382-7505). Susan Sherman, Policy and Special Projects Staff (TS-766C), Office of Pesticide Programs, Environmental Protection Agency, 401 M St. SW., Washington, D.C. 20460. Office location and telephone number: Room 1117B, CM No. 2, 1921 Jefferson Davis Highway, Arlington, VA (703-557-7102).

SUPPLEMENTARY INFORMATION:

I. Background

In 1979, EPA initiated a number of actions intended to subject all of the registered uses of 2,4,5-T and silvex herbicides to formal scrutiny. Products containing these active ingredients also contain, as an unavoidable impurity, 2,3,7,8-tetrachlorodibenzo-p-dioxin (2,3,7,8-TCDD). On March 1, 1979, the Administrator ordered the emergency suspension under FIFRA section 6(c) of the forestry, rights-of-way, and pasture uses of 2,4,5-T, as published in the **Federal Register** of March 15, 1979 (44 FR 15874); and of the forestry, rights-of-way, pasture, home and garden, commercial/ornamental turf, and aquatic weed control/ditchbank uses of silvex, as published in the **Federal Register** of March 15, 1979 (44 FR 15897). As required by statute, notices under FIFRA section 6(b)(1) of intent to cancel the same uses of each of these chemicals were issued at the same time, as published in the **Federal Register** of March 15, 1979 (44 FR 15893 and 44 FR 15917). Emergency suspension hearings before the Agency were commenced in May 1979 and were halted when the registrants withdrew from the proceedings. Thus, the suspension of all registrations subject to the emergency suspension order was affirmed by operation of law.

On December 9, 1979, EPA issued notices of intent to hold a hearing under FIFRA section 6(b)(2) to determine whether to cancel products registered for the remaining end uses of 2,4,5-T and silvex, including the rice, range, sugarcane, orchard, and miscellaneous non-crop uses, as published in the **Federal Register** of December 13, 1979 (44 FR 72316 and 44 FR 72328). Publication of these notices was preceded by referral of the notices to the United States Department of Agriculture (USDA) and the Scientific Advisory Panel (SAP), as published in the **Federal Register** of July 17, 1979 (44 FR 41531 and 44 FR 41536). Thereafter, the proceedings under FIFRA section 6(b)(2) were consolidated with the proceedings under FIFRA section 6(b)(1). The taking of testimony in the consolidated cancellation hearing commenced in March 1980. During the hearing more than 100 witnesses appeared, over 1,500 exhibits were entered in the record, and more than 23,000 pages of transcript were taken. The hearing continued until February 1981, when the proceeding was stayed by Chief Administrative Law Judge Finch pending the outcome of settlement discussions. Administrators William D. Ruckelshaus excused himself from any participation in the 2,4,5-T/silvex proceeding on March 23, 1983. On October 4, 1983, Administrator Ruckelshaus designated the Deputy Administrator as the official who will exercise the decisionmaking authority reserved to the Administrator, and the Office of Pesticides and Toxic Substances, the Office of General Counsel, and the Office of Enforcement Counsel as the offices which will perform all prosecutorial and investigative functions in the proceeding.

II. Initiation of Regulatory Actions

Under FIFRA section 6(b)(1), EPA hereby gives notice of its intent to cancel the registrations of all 2,4,5-T and silvex products registered for any use or uses which are not already subject to a section 6(b)(1) notice of intent to cancel. The 2,4,5-T and silvex products subject to cancellations under this notice include those whose labeling permits use on rice, range, sugarcane, orchards, or miscellaneous non-crop sites. At the same time, EPA is revoking the previously issued section 6(b)(2) notices concerning these end uses. EPA is also hereby giving notice of its intention to cancel all 2,4,5-T and silvex products which are labeled for manufacturing use.

A. Issuance of Section 6(b)(1) Notice; Revocation of Section 6(b)(2) Notices

FIFRA section 6(b) provides two mechanisms for instituting proceedings to cancel pesticides. If it appears to the Administrator or his delegate that a pesticide generally causes unreasonable adverse effects on the environment, he or his delegate may issue a notice of intent either to cancel the registration of that pesticide or alternatively to hold a hearing to determine whether or not the registration should be cancelled. The judgment of whether to issue a section 6(b)(1) or section 6(b)(2) notice is within the sole discretion of the Administrator or his delegate.

In a section 6(b)(1) proceeding, a registration is cancelled by operation of law if, following issuance of the notice of intent to cancel the registration, no person adversely affected by the notice files a timely request for a hearing, or if a hearing is timely requested but thereafter all such persons withdraw their requests for a hearing. By contrast, failure to request or participate in a section 6(b)(2) hearing does not automatically result in cancellation of affected registrations. The two proceedings are similar in that the Administrator, following a hearing initiated under either section 6(b)(1) or section 6(b)(2), may issue a decision to cancel the registration.

In announcing its intention to initiate a hearing under section 6(b)(2) to consider the cancellation of the non-suspended uses of 2,4,5-T and silvex, EPA concluded that products registered for those uses appeared to cause unreasonable adverse effects on the environment. (44 FR 41531 and 41537). In issuing a section 6(b)(1) notice at this time as a replacement for the section 6(b)(2) notices, EPA reaffirms its prior judgment that the non-suspended uses

of 2,4,5–T and silvex appear to cause unreasonable adverse effects on the environment. The reasons for withdrawing the section 6(b)(2) notices and replacing them with a section 6(b)(1) notice are discussed below.

The Dow Chemical Company, a major registrant and until now the most vigorous proponent of continued registration of 2,4,5–T and silvex products in the consolidated cancellation hearing, has recently withdrawn from the cancellation hearing and has otherwise requested that the registrations of its 2,4,5–T and silvex products be cancelled in their entirety. Dow's actions suggest that the incentives to pursue this litigation may not be as great as they were two and one-half years ago. It is reasonable to surmise that other litigants share Dow's perspective and may no longer be interested in pursuing the hearing. In light of these developments, it now seems appropriate to take steps intended to determine whether any party is interested in continuing the hearing in Dow's absence and, if not, to bring the time-consuming and costly adjudicatory proceeding to an end in a manner which removes 2,4,5–T and silvex from the market. Issuance of a section 6(b)(1) notice as a replacement for the section 6(b)(2) notices is a mechanism for achieving this outcome.

Each product registered for any of the uses covered by this new notice will be immediately cancelled by operation of law if no hearing is timely requested in response to this new notice unless the registrant requests amendment of its registration to delete all uses to which this notice applies. By contrast, in a section 6(b)(2) proceeding, such as the section 6(b)(2) proceeding which is a part of the current 2,4,5–T/silvex proceeding, cancellation of the products registered for uses covered by the section 6(b)(2) notices would not occur by operation of law even if all of the participants withdrew from the hearing.

In addition to issuing this new section 6(b)(1) notice concerning the non-suspended uses of 2,4,5–T and silvex products, I am hopeful that the remaining parties to the previously commenced cancellation proceeding will seriously consider following Dow's initiative in withdrawing from the hearing. I am taking these steps to facilitate the termination of the current adjudicatory proceeding on 2,4,5–T and silvex in a manner which best serves the public interest.

EPA has previously provided the U.S. Department of Agriculture with an opportunity to review the cancellations proposed in the section 6(b)(2) notices in terms of impact on the agricultural economy and has provided the Scientific Advisory Panel with an opportunity to review the cancellations proposed in the section 6(b)(2) notices in terms of impact on health and the environment. Hence, external review of the replacement section 6(b)(1) notice is not required, since the requisite opportunity to review the implications of cancellation of the same uses has previously been provided. Moreover, the congressional authorization of the Scientific Advisory Panel established by FIFRA section 25(d) expired on September 30, 1981, and has not been renewed.

B. Manufacturing Use Products

The various proceedings consolidated in the 2,4,5-T/silvex cancellation proceeding have been directed exclusively at 2,4,5-T and silvex products registered for various end-uses. None of the previous regulatory actions directly affect the registrations of manufacturing use or "technical" 2,4,5-T and silvex products, notwithstanding the fact that the only lawful ultimate use of such products is the formulation of end-use products. Since the Agency is endeavoring to cancel all end-use registrations of 2,4,5-T and silvex products, it is reasonable to include manufacturing-use products within the ambit of the new section 6(b)(1) notice. Hence this new notice includes manufacturing-use as well as end-use registrations.

C. Existing Stocks

Pursuant to FIFRA section 6(a)(1), the Agency will permit the continued distribution and sale of existing stocks of 2,4,5-T and silvex products which are labeled for end uses subject to this notice, and whose registrations are cancelled pursuant to this notice, for no more than one year from the effective date of such cancellation. However, this provision will apply only to those existing stocks of 2,4,5-T and silvex products which were packaged and labeled for such end uses and released for shipment prior to the date of receipt of this notice by the registrant or publication of this notice in the **Federal Register**, whichever occurs first. The Agency will not permit the continued distribution, sale, or use of any cancelled 2,4,5-T or silvex product labeled for any end-use subject to the 1979 emergency suspension orders or for manufacturing use.

IV. Procedural Matters

This notice announces EPA's intent to cancel registrations of 2,4,5-T and silvex products labeled for use on rice, range, sugarcane, orchards, and all miscellaneous non-crop areas. This notice also announces EPA's intent to cancel 2,4,5-T and silvex manufacturing-use products. Under section 6(b) of FIFRA, registrants and other adversely affected parties may request a hearing on this new cancellation notice. This unit of the notice explains how such persons may request a hearing, and the consequences of requesting or failing to request a hearing in accordance with the procedures specified in this notice.

A. Procedure for Requesting a Hearing

A registrant whose 2,4,5-T or silvex product is subject to this notice may request a hearing within 30 days of receipt of this notice, or within 30 days from publication of this notice in the **Federal Register**, whichever occurs later. Any other person adversely affected by the cancellation actions described above may request a hearing within 30 days of publication of this notice in the **Federal Register**.

Any person who requests a hearing must file the request in writing in accordance with the procedures established by FIFRA and the Agency's Rules of Practice Governing Hearings (40 CFR Part 164). These procedures require among other things that: (1) All requests must identify the specific registration(s) and the specific use(s) for which a hearing is requested, (2) all requests must be accompanied by objections that are specific for each use of the identified pesticide products for which a hearing is requested, and (3) all requests must be received by the Hearing Clerk within the applicable 30 day period. Failure to comply with any of these requirements will automatically result in denial of the request for a hearing.

Requests for hearings must be submitted to: Hearing Clerk (A–110), Environmental Protection Agency, 401 M Street, SW., Washington, DC 20460.

B. Consequences of Filing or Failing to File a Hearing Request

1. *Consequences of filing a timely and effective hearing request.* If a hearing on any cancellation action initiated by this notice is requested in a timely and valid manner, the hearing will be governed by the Agency's Rules of Practice Governing Hearings under FIFRA section 6 (40 CFR Part 164). The hearing will be limited to the registrations and uses as to which a hearing is requested. EPA anticipates that any such hearing would be consolidatd with the existing 2,4,5-T/silvex cancellation proceeding (if that proceeding is not termintated).

If a registrant whose 2,4,5-T or silvex product is labeled for more than one of the uses subject to this notice or other

adversely affected person elects to request a hearing concerning some but not all affected uses of the products, the registrant also must submit to the Registration Division of the Office of Pesticide Programs an application to amend the registration of such product to delete all other affected uses within the same 30-day period within which a hearing may be requested. Failure to submit such an application for amended registration will result in cancellation of the entire registration of the product by operation of law.

If a registrant or other adversely affected person requests a hearing pursuant to this notice for any 2,4,5-T or silvex product for which no hearing has previously been requested and the labeling submitted for that product has not been previously amended to delete all uses which were subject to the emergency suspension and section 6(b)(1) cancellation notices for 2,4,5-T and silvex issued in 1979, the registrant also must submit to the Registration Division of the Office of Pesticide Programs an application to amend such labeling to delete such previously cancelled uses within the same 30-day period within which a hearing may be requested. Failure to submit such an application for amended registration will result in cancellation of the entire registration of the pesticide.

2. *Consequences of failure to file in a timely and effective manner.* If no hearing has been requested within the applicable 30-day period for any 2,4,5-T or silvex product which is labeled for one or more uses subject to this notice and the registrant has not submitted to EPA an application to amend the registration of such product to delete all uses subject to this notice, the entire registration of the product will be cancelled. However, if a registrant does not request a hearing for a 2,4,5-T or silvex product which is labeled for one or more uses subject to this notice, but did previously request a hearing concerning cancellation of one or more uses of that product which were subject to the emergency suspension notices and notice of intent to cancel 2,4,5-T and silvex issued in 1979, the registrant has the right to continue to participate in a hearing with respect to the latter uses. At the conclusion of the 2,4,5-T/silvex cancellation proceeding, reinstatement of such uses will be granted to the extent permitted by the final adjudicatory order. Any registrant or former registrant who requests reinstatement of a registration for such uses pursuant to such a final adjudicatory order will not be required to comply with section 3(c)(1)(D) of FIFRA in order for such reinstatement to be granted.

Dated: October 14, 1983.

Edwin L. Johnson,

Acting Assistant Administrator for Pesticides and Toxic Substances.

[FR Doc. 83-28469 Filed 10-17-83; 8:45 am]

BILLING CODE 6560-50-M

[OPP-60009; PH-FRL 2454-4]

2,4,5-T and Silvex Products; Enforcement Policy on Transfer, Distribution, Sale or Importation of Unregistered Products

AGENCY: Environmental Protection Agency (EPA).

ACTION: Notice; Statement of Enforcement Policy.

SUMMARY: The Environmental Protection Agency (EPA) announces that it will regard as unlawful, and subject to criminal or civil penalty, any transfer between establishments or other distribution, sale, or importation of any unregistered pesticide product containing 2,4,5-trichlorophenoxyacetic acid (2,4,5-T) or 2-(2,4,5-trichlorophenoxy) propionic acid (silvex) or any salt, ester, amine or other derivative of 2,4,5-T or silvex (2,4,5-T and silvex products) except to the extent specifically authorized by section 3(b) of the Federal Insecticide, Fungicide, and Rodenticide Act (FIFRA), 7 U.S.C. 136a(b)(1), or by 40 CFR 162.3(dd) and 162.5, notwithstanding any prior EPA policy statements or other issuance to the contrary.

DATE: This policy statement will become effective on November 17, 1983.

FOR FURTHER INFORMATION CONTACT:

John R. MacDonald, Compliance Monitoring Staff (EN-342), Office of Pesticides and Toxic Substances, Environmental Protection Agency, Rm. M-2624, 401 M St., SW., Washington, DC 20460, (202-382-7846).

Edward C. Gray, Pesticides and Toxic Substances Division (LE-132P), Office of General Counsel, Environmental Protection Agency, Rm. W-519, 401 M St., SW., Washington, DC 20460, (202-382-7510).

SUPPLEMENTARY INFORMATION: FIFRA sections 3(a) and 12(a)(1)(A) prohibit the distribution, sale, shipment, or other movement in commerce of pesticides which are not registered under FIFRA, except as permitted by other provisions of FIFRA. FIFRA section 3(b)(1) allows transfers of an unregistered pesticide if "the transfer is from one registered establishment to another registered establishment operated by the same producer solely for packaging at the second establishment or for use as a constituent part of another pesticide product at the second establishment."

Any transfer of the unregistered pesticide between two registered establishments owned by the same person is lawful under FIFRA section 3(b)(1), so long as the purpose of the transfer is to allow formulation or packaging of a pesticide product at the transferee establishment.

If the transfer of the unregistered pesticide is between two establishments owned by different persons, 40 CFR 162.3(dd) provides that the transferor establishment and the transferee establishment will be regarded by EPA as being "operated by the same producer" only if the transferee establishment is "operated under contract with the registrant of the pesticide either to package the pesticide product or to use the pesticide as a constituent part of another pesticide product, provided that the final pesticide product is registered by the transferor establishment." Thus, for a transfer of an unregistered pesticide between establishments to be lawful under the regulations, the owner of the transferor establishment must be either (1) the owner of the transferee establishment or (2) the registrant of the registered pesticide product which will be produced at the transferee establishment using the transferred unregistered pesticide. (The regulations also allow transfers in connection with experimental use permits, emergency exemptions, disposal, exports, and other cases, 40 CFR 162.5(b) (3) through (7); this notice does not affect such transfers.)

In addition to the types of transfers described above which are allowed by FIFRA and the implementing regulations, EPA has also in the past declared that, as an exercise of its prosecutorial discretion, no enforcement action would be taken against another category of transfers of unregistered pesticide. Under FIFRA Compliance Program Policy No. 3.6, issued by the Pesticides and Toxic Substances Enforcement Division and dated May 10, 1982, EPA generally allows the transfer of an unregistered pesticide if (1) the owner of the transferee establishment is the registrant under FIFRA of a registered end-use product, and (2) the transferor establishment and the transferee establishment are parties to a contract, and (3) the contract requires the transferor to produce the unregistered pesticide solely for use in the production of the transferee's registered end-use product.

Elsewhere in this issue of the **Federal Register**, EPA is announcing its intent to cancel all registrations of 2,4,5-T and silvex products. In view of this action, EPA has determined that the public interest will best be served by prohibiting the sale, distribution, importation, or other transfer of unregistered 2,4,5-T and silvex products, except as specifically allowed by FIFRA section 3(b) or 40 CFR Part 162. Accordingly, after the effective date of this notice, EPA will regard as unlawful, and subject to criminal and civil penalty, any transfer of any unregistered 2,4,5-T or silvex products except those transfers authorized by FIFRA section 3(b) or 40 CFR Part 162, notwithstanding any prior EPA statement to the contrary (including but not limited to FIFRA Compliance Program Policy No. 3.6).

Dated: October 14, 1983.

Edwin L. Johnson,

Acting Assistant Administrator for Pesticides and Toxic Substances.

[FR Doc. 83-28470 Filed 10-17-83; 8:45 am]

BILLING CODE 6560-50-M

Reader Aids

Federal Register

Vol. 48, No. 202

Tuesday, October 18, 1983

INFORMATION AND ASSISTANCE

PUBLICATIONS

Code of Federal Regulations

CFR Unit	202-523-3419
	523-3517
General information, index, and finding aids	523-5227
Incorporation by reference	523-4534
Printing schedules and pricing information	523-3419

Federal Register

Corrections	523-5237
Daily Issue Unit	523-5237
General information, index, and finding aids	523-5227
Privacy Act	523-4534
Public Inspection Desk	523-5215
Scheduling of documents	523-3187

Laws

Indexes	523-5282
Law numbers and dates	523-5282
	523-5266
Slip law orders (GPO)	275-3030

Presidential Documents

Executive orders and proclamations	523-5233
Public Papers of the President	523-5235
Weekly Compilation of Presidential Documents	523-5235

United States Government Manual 523-5230

SERVICES

Agency services	523-5237
Automation	523-3408
Library	523-4986
Magnetic tapes of FR issues and CFR volumes (GPO)	275-2867
Public Inspection Desk	523-5215
Special Projects	523-4534
Subscription orders (GPO)	783-3238
Subscription problems (GPO)	275-3054
TTY for the deaf	523-5229

FEDERAL REGISTER PAGES AND DATES, OCTOBER

45093-45218.....3
45219-45370.....4
45371-45522.....5
45523-45752.....6
45753-46004.....7
46005-46258.....11
46259-46486.....12
46487-46730.....13
46731-46962.....14
46963-48214.....17
48215-48438.....18

CFR PARTS AFFECTED DURING OCTOBER

At the end of each month, the Office of the Federal Register publishes separately a list of CFR Sections Affected (LSA), which lists parts and sections affected by documents published since the revision date of each title.

1 CFR

Proposed Rules:
Ch. III.....45266, 46795
Ch. IV.....47976
305.....45266

3 CFR

Executive Orders:
July 15, 1875 (Revoked in part by PLO 6479).....45559
12002 (See EO 12444).....48215
12214 (See EO 12444).....48215
12444.....48215

Proclamations:
5110.....45219
5111.....45221
5112.....45371
5113.....45523
5114.....45753
5115.....46259
5116.....46963
5117.....46965
5118.....48217

5 CFR

Ch. XIV.....45373
213.....46261
752.....45525
1255.....45373

Proposed Rules:
Ch. I.....47990
Ch. III.....47982

7 CFR

2.....46261
51.....46487
247.....46731
301.....46262
319.....46732
752.....45526
906.....45374
908.....45526, 46488
910.....45374, 45755, 46961
919.....45374
929.....45374
981.....45374
991.....45374, 48219
1435.....45374
1901.....45532
1951.....46967
1955.....46967
1962.....46967
1965.....46967

Proposed Rules:
Subtitle A.....47236
Ch. I.....47236
Ch. II.....47236
Ch. III.....47236
Ch. IV.....47236
Ch. V.....47236
Ch. VI.....47236
Ch. VII.....47236
Ch. IX.....47236
Ch. X.....47236
Ch. XI.....47236
Ch. XII.....47236
Ch. XIV.....47236
Ch. XV.....47236
Ch. XVI.....47236
Ch. XVII.....47236
Ch. XVIII.....47236
Ch. XXI.....47236
Ch. XXIV.....47236
Ch. XXV.....47236
Ch. XXVI.....47236
Ch. XXVII.....47236
Ch. XXVII.....47236
Ch. XXIX.....47236
226.....45779
402.....46062
441.....45782
781.....46065
904.....45786
910.....45565
966.....46544
1065.....45117
1131.....46343
1139.....46797

8 CFR

103.....45093
214.....45093
238.....45093
248.....45093

Proposed Rules:
Ch. 1.....47530
103.....48242

9 CFR

Proposed Rules:
Ch. I.....47236
Ch. II.....47236
Ch. III.....47236
Ch. IV.....47236
92.....46355
317.....45118
318.....48242
319.....45118
325.....46996
350.....45755
362.....45755
381.....45118, 46996, 48224

10 CFR

2.....46489
50.....46489
55.....45223
71.....45381
761.....45746
710.....46499

Proposed Rules:
Ch. I.....48156

Ch. II 47324
Ch. III 47324
Ch. X 47324
50 45787

12 CFR

7 46502
29 45532
204 ..... 46005, 46262
207 ..... 45533, 48219
217 ..... 45756, 46262
220 ..... 45533, 48219
221 ..... 45533, 48219
224 45533
226 48219
561 45382
563 45382
760 46006

Proposed Rules:

Ch. I 47716
Ch. II 46996
Ch. V 48110
Ch. VI 48074
Ch. VII 48150
29 47001

13 CFR

101 45224
123 45225
133 46008

Proposed Rules:

Ch. I 48020
Ch. II 47254

14 CFR

39 ..... 45093, 45535, 46008, 46009, 46503, 46969, 48220, 48222
71 ..... 45094, 45095, 45536, 45537, 46010, 46503
95 46504
97 45096
205 46264
248 46265
294 46265
320 45236
380 46265
389 45758

Proposed Rules:

Ch. I 46358, 47582
Ch. II 47003, 48038
Ch. V 47972
21 ..... 45214, 45565
25 ..... 46218, 46250
29 46250
39 46070
43 48364
61 45214
65 45214
71 ..... 45118, 45566, 48244
91 48364
107 45214
109 45214
121 ..... 45214, 46218, 46250, 48364
127 48364
135 ..... 45214, 48364
145 45214

15 CFR

Proposed Rules:

Subtitle A 47254
Ch. I 47254
Ch. II 47254
Ch. III 47254
Ch. IV 47254
Ch. VIII 47254
Ch. IX 47254
Ch. XXIII 47254

16 CFR

453 45537

Proposed Rules:

Ch. I 48120
Ch. II 48064
1212 45405
1500 45567
1513 45567

17 CFR

145 ..... 46010, 48223
146 ..... 46010, 48223
147 ..... 46010, 48223
229 46012
230 ..... 46012, 46736
231 ..... 46012, 46969
239 ..... 45386, 46012
240 ..... 46012, 46736
241 46012
270 46012
274 46012

Proposed Rules:

Ch. I 48056
Ch. II 48190
33 46797
230 46801
240 ..... 45119, 48245
249 48245

18 CFR

2 46012
35 ..... 46012, 46970
157 46021
270 48223
271 ..... 45097, 46266–46268, 48223
274 45097
282 45758
301 46970
385 45388

Proposed Rules:

Ch. I 48104
101 46361
104 46361
141 46361
154 ..... 46361, 47003
157 47003
159 46361
201 46361
204 46361
260 46361
271 46071
275 47003
282 45787
410 45568

19 CFR

4 ..... 46510, 46978
7 46740
10 ..... 46510, 46740
22 46740
101 45538
103 45538
113 46740
145 46740
148 46978
158 46740
191 46740
210 45544

Proposed Rules:

Ch. I 46805, 47724
4 ..... 46808, 46810
18 46812
101 45409
123 46812
144 46812

20 CFR

404 46142

Proposed Rules:

Ch. I 47538
Ch. II 48012
Ch. III 47340
Ch. IV 47538
Ch. V 47538
Ch. VI 47538
Ch. VII 47538
10 48249
422 ..... 46072, 47008

21 CFR

81 ..... 45237, 45760, 46022
109 45544
131 45545
175 48228
178 ..... 46773, 46774
179 46022
193 45547
211 46979
430 46270
436 46270
442 46270
520 ..... 46979, 48229
522 ..... 46023, 48229
540 45760
558 ..... 45102, 46023, 46024, 46514, 46515
700 46979
800 46979
1308 46516

Proposed Rules:

Ch. I 47340
182 45121
184 45121
211 47008
351 46694
610 ..... 46815, 47009
620 47009
630 47009
640 47009
650 47009
660 47009
680 47009
700 47008
800 47008

22 CFR

Proposed Rules:

Ch. I 47578
Ch. II 47970

23 CFR

655 46775

Proposed Rules:

Ch. I 47582
Ch. II 47582
658 46545

24 CFR

26 46980
201 46980
215 46980
221 46980
236 46980
570 ..... 45760, 46778, 46980
841 46980
882 46980
888 ..... 45547, 46980
890 476980

Proposed Rules:

Subtitle A 47418
Subtitle B 47418
24 ..... 46072, 46817

25 CFR

71 45103

Proposed Rules:

Ch. I 47472
140 45789

26 CFR

1 ..... 45761, 46272, 46296
4 46272
31 46296
35a 45362

Proposed Rules:

Ch. I 47730
1 ..... 47010, 48255
5f 48255
31 47010

27 CFR

4 45549
5 ..... 45549, 46518
7 45549
9 ..... 45238, 45239, 46518–46524
170 46526
240 46526

Proposed Rules:

Ch. I 47708
9 46387

28 CFR

2 48230

Proposed Rules:

Ch. I 47530

29 CFR

1601 46298

Proposed Rules:

Subtitle A 47538
Ch. II 47538
Ch. IV 47538
Ch. V 47538
Ch. XII 47946
Ch. XIV 47928
Ch. XVII 47538
Ch. XXV 47538
Ch. XXVI 48004
1908 45411
1910 45956
1926 45872

30 CFR

251 46025
913 46528
917 46299
935 ..... 46027, 46301, 46530
938 45389
946 46028

Proposed Rules:

Ch. I 47538
Ch. II 47472
Ch. VII 47472
55 45336
56 45336
57 45336

58 ... 45336
917 ... 48255
935 ... 45420
938 ... 46817

31 CFR

51 ... 46982
Proposed Rules:
Subtitle A ... 47702
Ch. I ... 47702
Ch. II ... 47702

32 CFR

251 ... 45242
Proposed Rules:
Ch. I ... 47302
Ch. V ... 47302
Ch. VI ... 47302
Ch. VII ... 47302
Ch. XVI ... 48018
199 ... 45791

33 CFR

100 ... 45244, 46531
117 ... 45245, 46532
130 ... 46178
131 ... 46178
132 ... 46178
151 ... 45704
155 ... 45704
157 ... 45718, 46985
163 ... 48230
165 ... 46533, 46534, 46779
Proposed Rules:
Ch. I ... 47582
Ch. II ... 47302
Ch. IV ... 47582
162 ... 45798
164 ... 46819

34 CFR

668 ... 45670
690 ... 45670
Proposed Rules:
Subtitle A ... 47308
Ch. I ... 47308
Ch. II ... 47308
Ch. III ... 47308
Ch. IV ... 47308
Ch. V ... 47308
Ch. VI ... 47308
Ch. VII ... 47308
350 ... 45568
351 ... 45568
352 ... 45568
353 ... 45568
354 ... 45568
355 ... 45568
357 ... 45568

35 CFR

Proposed Rules:
Ch. I ... 47998

36 CFR

7 ... 46779, 46780
60 ... 46306
Proposed Rules:
Ch. I ... 47472
Ch. II ... 47236
Ch. III ... 47302
Ch. VIII ... 47858
Ch. IX ... 48002
7 ... 48257
216 ... 45421
1190 ... 47860

37 CFR

Proposed Rules:
Ch. I ... 47254
1 ... 45424
2 ... 45424

38 CFR

1 ... 46985
Proposed Rules:
Ch. I ... 48024
21 ... 45123, 45268, 45572, 47011

39 CFR

111 ... 45761, 46031
447 ... 48230, 48231
Proposed Rules:
111 ... 45269
3001 ... 46545

40 CFR

52 ... 45245, 45246, 46046, 46047, 46309, 46986
60 ... 46535, 46536, 48328, 48368
61 ... 46535
81 ... 46537, 46782
87 ... 46481
180 ... 46310
192 ... 45926
256 ... 46787
420 ... 46942
433 ... 45105
469 ... 45249
717 ... 45765
Proposed Rules:
Ch. I ... 47864
51 ... 45269, 46152
52 ... 46081, 46391–46393, 46548, 46823
60 ... 45701, 46224, 46472
81 ... 46082, 46085, 46393, 46549–46553
141 ... 45502
162 ... 46397
180 ... 45573, 46395, 46396
228 ... 45798
261 ... 45210
271 ... 46824
403 ... 46944
420 ... 46944
464 ... 45573
465 ... 45573
1502 ... 46554, 47862
1508 ... 46554

41 CFR

Ch 1 ... 45392, 45557
Ch. 101 ... 45105
9–1 ... 46987
9–7 ... 46987
9–4 ... 45766
9–51 ... 45766
101–11 ... 46310
101–25 ... 48231
101–41 ... 46788
105–61 ... 45392
Proposed Rules:
Ch. 1 ... 47948
Ch. 4 ... 47236
Ch. 9 ... 47324
Ch. 12 ... 47582
Ch. 13 ... 47254
Ch. 14 ... 47472
Ch. 25 ... 47980
Ch. 29 ... 47538
Ch. 60 ... 47538
Ch. 101 ... 47948
Ch. 105 ... 47948
101–41 ... 46554

42 CFR

51c ... 45558
52b ... 45558
55a ... 45558
56 ... 45558
57 ... 45112
110 ... 45250
122 ... 45558
405 ... 45766
Proposed Rules:
Ch. I ... 47340
Ch. II ... 47340
Ch. III ... 47340
Ch. IV ... 47340

43 CFR

Subtitle A ... 45664
Public Land Orders:
44 (Revoked by PLO 6478) ... 45401
98 (Revoked by PLO 6478) ... 45401
399 (Revoked in part by PLO 6477) ... 45395
698 (Revoked by PLO 6473) ... 45393
780 (Revoked by PLO 6478) ... 45401
3645 (Revoked by PLO 6472) ... 45393
5170 (Revoked in part by PLO 6477) ... 45395
5179 (Revoked in part by PLO 6477) ... 45395
5180 (Revoked in part by PLO 6477) ... 45395
5184 (Revoked in part by PLO 6477) ... 45395
6472 ... 45393
6473 ... 45393
6474 ... 45394
6475 ... 45394
6476 ... 45395
6477 ... 45395
6478 ... 45401
6479 ... 45559
6480 ... 46049
6481 ... 46049
6482 ... 46050
Proposed Rules:
Subtitle A ... 47472
Ch. I ... 47472
Ch. II ... 47472
2620 ... 48400

44 CFR

61 ... 46789
62 ... 46789
64 ... 46988, 46989
65 ... 46990, 48233
67 ... 46050, 46312, 46992
Proposed Rules:
Ch. I ... 46934
65 ... 48258
67 ... 45425, 46085, 47014–47020, 48259

45 CFR

13 ... 45251
Proposed Rules:
Subtitle A ... 47340
Ch. II ... 47340
Ch. III ... 47340
Ch. VI ... 47980
Ch. XI ... 47978
Ch. XII ... 47856
Ch. XIII ... 47340

46 CFR

160 ... 45113
162 ... 45727
380 ... 45559
542 ... 46175
543 ... 46175
544 ... 46175
Proposed Rules:
Ch. I ... 47582
Ch. III ... 47582
Ch. IV ... 48114
Ch. IV ... 45269
7 ... 45574
10 ... 46556
24 ... 45425
25 ... 45425
26 ... 45425
30 ... 45425
31 ... 45425
32 ... 45425
35 ... 45425
70 ... 45425
71 ... 45425
75 ... 45425
77 ... 45425
78 ... 45425
90 ... 45425
91 ... 45425
94 ... 45425
96 ... 45425
97 ... 45425
107 ... 45425
108 ... 45425
109 ... 45425
157 ... 46556
163 ... 45425
188 ... 45425
189 ... 45425
192 ... 45425
195 ... 45425
196 ... 45425
298 ... 46825
508 ... 45800
524 ... 45270
531 ... 45270
536 ... 45270
538 ... 45272

47 CFR

0 ... 45652
1 ... 45652, 48234
2 ... 45560
61 ... 46791
63 ... 46791
69 ... 48234
73 ... 45401–45403, 46994, 48234
81 ... 45114, 45560

83 ..... 45114, 45560
87 45114
97 45652
Proposed Rules:
Ch. I 47020, 48080
67 ..... 46556, 47021
73 ..... 45428–45438, 47023–47031, 48264
83 45439

48 CFR
Ch. I 46541
Proposed Rules:
Ch. 9 47324

49 CFR
567 46994
571 ..... 46053, 46793, 48235
1033 45257
1043 45775
1162 46542
1307 ..... 46542, 46794
Proposed Rules:
Ch. X 46399
27 46399
195 46589
218 45272
1039 45137
1155 45440
Proposed Rules:
Subtitle A 47582
Ch. I 47582
Ch. II 47582
Ch. III 47582
Ch. IV 47582
Ch. V 47582
Ch. VI 47582
Ch. X 48134
571 47032

50 CFR
17 ..... 46053, 46328–46337
23 ..... 45259, 45775
285 46995
611 ..... 45403, 46542
646 45404
654 46057
655 ..... 45403, 45404
656 45403
657 45403
658 46057
661 45263
663 48241
672 46542
681 46342
Proposed Rules:
Ch. I 47472
Ch. IV 47472
Ch. V 47254
17 ..... 45574, 46086, 46590
23 45575
611 ..... 45804, 45806
663 ..... 45274, 48265

Listing of Public Laws

Last Listing October 17, 1983

This is a continuing list of public bills from the current session of Congress which have become Federal laws. The text of laws is not published in the Federal Register but may be ordered in individual pamphlet form (referred to as "slip laws") from the Superintendent of Documents, U.S. Government Printing Office, Washington, D.C. 20402 (phone 202–275–3030).

S. 884/Pub. L. 98–123. To provide for the use and distribution of funds awarded the Red Lake Band of Chippewa Indians in docket numbered 15–72 of the United States Court of Claims. (Oct. 13, 1983; 97 Stat. 815) Price: $1.50.

S. 1148/Pub. L. 98–124 To provide for the use and distribution of funds awarded the Assiniboine Tribe of the Fort Belknap Indian Community, Montana, and the Assiniboine Tribe of the Fort Peck Indian Reservation, Montana, in docket numbered 10–81L by the United States Court of Claims, and for other purposes. (Oct. 13, 1983; 97 Stat. 817) Price: $1.50.

H.R. 3415/Pub. L. 98–125 District of Columbia Appropriation Act, 1984. (Oct. 13, 1983; 97 Stat. 819) Price: $2.00.

S.J. Res. 102/Pub. L. 98–126 To designate the week of October 16, 1983, through October 22, 1983, as "Lupus Awareness Week. (Oct. 13, 1983; 97 Stat. 830) Price: $1.50.