4-26-84
Vol. 49 No. 82
Pages 17931-18080

# federal register

Thursday
April 26, 1984

## Selected Subjects

**Air Pollution Control**
Environmental Protection Agency

**Authority Delegations (Government Agencies)**
Food and Drug Administration

**Bridges**
Coast Guard

**Credit Unions**
National Credit Union Administration

**Endangered and Threatened Species**
Fish and Wildlife Service
National Oceanic and Atmospheric Administration

**Exports**
International Trade Administration

**Food Ingredients**
Food and Drug Administration

**Grant Programs—Transportation**
Federal Highway Administration

**Hazardous Substances**
Consumer Product Safety Commission

**Health Insurance**
Defense Department

**Loan Programs—Business**
National Oceanic and Atmospheric Administration

**Marine Safety**
Coast Guard

CONTINUED INSIDE

# Selected Subjects

FEDERAL REGISTER Published daily, Monday through Friday, (not published on Saturdays, Sundays, or on official holidays), by the Office of the Federal Register, National Archives and Records Service, General Services Administration, Washington, D.C. 20408, under the Federal Register Act (49 Stat. 500, as amended; 44 U.S.C. Ch. 15) and the regulations of the Administrative Committee of the Federal Register (1 CFR Ch. I). Distribution is made only by the Superintendent of Documents, U.S. Government Printing Office, Washington, D.C. 20402.

The Federal Register provides a uniform system for making available to the public regulations and legal notices issued by Federal agencies. These include Presidential proclamations and Executive Orders and Federal agency documents having general applicability and legal effect, documents required to be published by Act of Congress and other Federal agency documents of public interest. Documents are on file for public inspection in the Office of the Federal Register the day before they are published, unless earlier filing is requested by the issuing agency.

The Federal Register will be furnished by mail to subscribers for $300.00 per year, or $150.00 for six months, payable in advance. The charge for individual copies is $1.50 for each issue, or $1.50 for each group of pages as actually bound. Remit check or money order, made payable to the Superintendent of Documents, U.S. Government Printing Office, Washington D.C. 20402.

There are no restrictions on the republication of material appearing in the Federal Register.

Questions and requests for specific information may be directed to the telephone numbers listed under INFORMATION AND ASSISTANCE in the READER AIDS section of this issue.

**Marketing Agreements**
Agricultural Marketing Service

**Natural Gas**
Federal Energy Regulatory Commission

**Organization and Functions (Government Agencies)**
Defense Department

**Radio Broadcasting**
Federal Communications Commission

**Surface Mining**
Surface Mining Reclamation and Enforcement Office

**Television Broadcasting**
Federal Communications Commission

# Contents

Federal Register
Vol. 49, No. 82
Thursday, April 26, 1984

**Agricultural Marketing Service**
RULES
17931 Oranges, grapefruit, tangerines, and tangelos grown in Fla.
PROPOSED RULES
17950 Pears (Beurre D'Anjou, etc.) grown in Calif., Oreg., and Wash.

**Agriculture Department**
*See* Agricultural Marketing Service; Federal Grain Inspection Service; Forest Service; Soil Conservation Service.

**Architectural and Transportation Barriers Compliance Board**
NOTICES
17984 Meetings

**Centers for Disease Control**
NOTICES
Meetings:
18043 Mine Health Research Advisory Committee (NIOSH)

**Civil Aeronautics Board**
NOTICES
17985 All-cargo air service certificate applications
Complaints filed:
17984 Continental Air Lines, Inc., et al.
Hearings, etc.:
17984 Aerial Transit Co.
17984 Air New England/Mackey International Airlines
17985 Lusair International, Inc.
17985 Premiere Airlines, Inc.
17985 Purolator Courier Corp.

**Civil Rights Commission**
NOTICES
Meetings; State advisory committees:
17985 Maryland
17986 Minnesota
17986 Wisconsin
18064 Meetings; Sunshine Act

**Coast Guard**
RULES
Drawbridge operations:
17939 Florida
17940 Washington
Ports and waterways safety:
17941 Safety and security zones, etc.; list of temporary rules
Regattas and marine parades:
17939 Golden Gate to Spruce Goose Race
PROPOSED RULES
Regattas and marine parades:
17977 Harvard-Yale Regatta
NOTICES
Committees; establishment, renewals, terminations, etc.:
18059 Rules of Road Advisory Council

**Commerce Department**
*See* International Trade Administration; National Oceanic and Atmospheric Administration.

**Consumer Product Safety Commission**
PROPOSED RULES
17956 Hazardous substances; flammability classifications.

**Defense Department**
*See also* Engineers Corps.
RULES
Organization, functions, and authority delegations:
17937 Director of Operational Test and Evaluation
PROPOSED RULES
Civilian health and medical program of uniformed services (CHAMPUS):
17976 Ambulance service
NOTICES
Meetings:
18028 DIA Advisory Committee
18028 Military dependents, education; process for Section 6 Schools; per pupil cost definition

**Drug Enforcement Administration**
NOTICES
Registration applications, etc.; controlled substances:
18053 Du Pont Pharmaceuticals
18053 Stepan Co. (2 documents)

**Education Department**
NOTICES
Meetings:
18029 Dependents' Education Advisory Council

**Energy Department**
*See* Federal Energy Regulatory Commission.

**Engineers Corps**
NOTICES
Environmental statements; availability, etc.:
18028 Great Lakes Connecting Channels and Harbors Project, St. Marys River, Sault Ste. Marie, Mich.
18028 Hampton Roads, Newport News and Suffolk, Va.

**Environmental Protection Agency**
RULES
Air pollution; standards of performance for new stationary sources:
18076 Lime manufacturing plants
PROPOSED RULES
Pesticide chemicals in or on raw agricultural commodities; tolerances and exemptions, etc.:
17978 Oxamyl; correction
Water pollution; effluent guidelines for point source categories:
17978 Pharmaceutical manufacturing; cost data availability; extension of time
NOTICES
Air quality; prevention of significant deterioration (PSD):
18033, 18036 Permit approvals (3 documents)

Meetings:
18037 Science Advisory Board
Pesticide registration, cancellation, etc.:
18033 Ciba-Geigy Corp. et al.; correction
Pesticides; emergency exemption applications:
18033 Fenamiphos, etc.; correction
Toxic and hazardous substances control:
18035 Confidential information and data transfer to contractors (Midwest Research Institute)
18033 Premanufacture notices; monthly status reports; correction
18033 Premanufacture notices receipts
18033 Premanufacture notices receipts; correction

**Equal Employment Opportunity Commission**
NOTICES
18064 Meetings; Sunshine Act

**Federal Communications Commission**
RULES
Radio broadcasting:
17942 AM broadcast stations, daytime-only, and dominant and secondary stations; hours of operation
Radio stations; table of assignments:
17948 California
Television stations; table of assignments:
17948 Ohio
PROPOSED RULES
Radio stations; table of assignments:
17979 Arizona
Television stations; table of assignments:
17980 Mississippi
NOTICES
Hearings, etc.:
18037 High Springs Television, Inc., et al.

**Federal Deposit Insurance Corporation**
NOTICES
18064, 18065 Meetings; Sunshine Act (2 documents)

**Federal Election Commission**
NOTICES
18065 Meetings; Sunshine Act

**Federal Energy Regulatory Commission**
RULES
Natural Gas Policy Act:
17934 Ceiling prices; maximum lawful prices and inflation adjustment factors
17935 Incremental pricing; acquisition cost thresholds
NOTICES
Hearings, etc.:
18030 Ellensburg, Wash., et al. (3 documents)
18030 Middle South Services, Inc. (2 documents)
18030 Northwest Pipeline Corp.
18031, 18032 Oklahoma Gas & Electric Co. (3 documents)
18032 Public Service Co. of Oklahoma
18032 Public Utility District No. 1 of Lewis County, Wash.

**Federal Grain Inspection Service**
PROPOSED RULES
17950 Official services, official inspection, weighing, and supervision; fees; correction

**Federal Highway Administration**
PROPOSED RULES
Public transportation:
17968 Mass transit and special use highway projects
NOTICES
Environmental statements; availability, etc.:
18060 Anchorage, Alaska; intent to prepare
18060 Volusia County, Fla.; intent to prepare

**Federal Home Loan Mortgage Corporation**
NOTICES
18065 Meetings; Sunshine Act

**Federal Maritime Commission**
NOTICES
18038 Agreements filed, etc.
18065 Meetings; Sunshine Act

**Federal Procurement Policy Office**
NOTICES
18056 Federally funded research and development centers (Policy Letter 84-1); correction

**Federal Reserve System**
RULES
Truth in lending (Regulation Z):
17932 Official staff commentary update; correction
NOTICES
Bank holding company applications, etc.:
18038 Bar Harbor Bankshares et al.
18039 Central Arkansas Bancshares, Inc.
18039 Dominion Bankshares Corp.
18040 Firstbank of Illinois Co. et al.
18040 First Bank System, Inc.
18040 First Vermont Financial Corp. et al.
18041 Fleet Financial Group, Inc., et al.
18041 Seattle Bancorporation
18042 Security Pacific National Bank
18042 Ultra Bancorporation et al.

**Fiscal Service**
NOTICES
Surety companies acceptable on Federal bonds:
18063 Midwestern Casualty & Surety Co.; termination

**Fish and Wildlife Service**
PROPOSED RULES
Endangered and threatened species:
17981 Sea turtles; withdrawn
NOTICES
Environmental statements; availability, etc.:
18050 Bristol Bay, Alaska

**Food and Drug Administration**
RULES
Organization and authority delegations:
17936 Center for Veterinary Medicine, Director, et al.
PROPOSED RULES
GRAS or prior-sanctioned ingredients:
17966 Hydrochloric acid
NOTICES
Food additive petitions:
18043 Bonewitz Chemical Services, Inc.
18043 Dow Chemical Co.
18044 E.I. duPont de Nemours & Co.
18044 Economics Laboratory, Inc.
18043 M&T Chemicals, Inc.
18044 Sun Chemical Corp.

**Forest Service**
NOTICES
Meetings:
17983 Lewis and Clark National Forest Grazing Advisory Board

**Health and Human Services Department**
*See* Centers for Disease Control; Food and Drug Administration.

**Historic Preservation, Advisory Council**
NOTICES
17983 Meetings

**Housing and Urban Development Department**
RULES
Mortgage and loan insurance programs:
17936 Property improvement and mobile home loans; maximum loan limits; correction
17937 Solar Energy and Energy Conservation Bank; financial assistance program; correction
NOTICES
18046, 18047 Agency information collection activities under OMB review (3 documents)
Authority delegations:
18045 Field Office Managers
18045 New York Regional Office; proposed field reorganization

**Interior Department**
*See* Fish and Wildlife Service; Land Management Bureau; Minerals Management Service; Surface Mining Reclamation and Enforcement Office.

**Internal Revenue Service**
PROPOSED RULES
Income taxes:
17973 Accelerated cost recovery system; correction

**International Trade Administration**
RULES
Export licensing:
17932 Commodity control list; laboratory analytical instruments; interim
NOTICES
Antidumping:
18024 Cold-rolled carbon steel sheet from Brazil
17986 Hot-rolled carbon steel plate and sheet from Brazil
18023 Hot-rolled carbon steel sheet from Brazil
18004 Potassium chloride from East Germany
18005 Potassium chloride from Israel
18002 Potassium chloride from Spain
18004 Potassium chloride from U.S.S.R.
Countervailing duties:
17988 Carbon steel products from Brazil
18006 Cold-rolled carbon steel flat-rolled products from Argentina
18000 Potassium chloride from East Germany
18001 Potassium chloride from Israel
18003 Potassium chloride from Spain
18002 Potassium chloride from U.S.S.R.

**Interstate Commerce Commission**
NOTICES
Railroad operation, acquisition, construction, etc.:
18052 Chicago & North Western Transportation Co.
18053 Consolidated Rail Corp.

**Justice Department**
*See* Drug Enforcement Administration; Juvenile Justice and Delinquency Prevention Office.

**Juvenile Justice and Delinquency Prevention Office**
NOTICES
Meetings:
18054 Juvenile Justice and Delinquency Prevention National Advisory Committee

**Labor Department**
*See* Wage and Hour Division.

**Land Management Bureau**
NOTICES
Conveyance of public lands:
18048 Nevada
18050 Washington
Environmental statements; availability, etc.:
18050 North Fork Well, Park County, Wyo.; extension of time
Meetings:
18047 Albuquerque District Advisory Council
Oil and gas leases:
18049 New Mexico (2 documents)
Sale of public lands:
18047 Idaho
Withdrawal and reservation of lands:
18048 Nevada
18049 Oregon

**Management and Budget Office**
*See* Federal Procurement Policy Office.

**Maritime Administration**
NOTICES
Meetings:
18060 Maritime Advisory Committee

**Minerals Management Service**
NOTICES
Environmental statements; availability, etc.:
18051 Alaska OCS mineral prelease and exploration proposals
Outer Continental Shelf; development operations coordination:
18052 Tenneco Oil Exploration & Production

**National Aeronautics and Space Administration**
NOTICES
Patent licenses, exclusive:
18054 Bio-Imaging Research Inc.
18054 Laudenslager, Dr. James B., et al.

**National Credit Union Administration**
PROPOSED RULES
Federal credit unions:
17953 Corporate central Federal credit unions
17951 Supervisory committee audits and verifications

**National Oceanic and Atmospheric Administration**
RULES
Financial aid to fisheries:
18072 Loan fund procedures; available fisheries loans and open season for applications
PROPOSED RULES
Endangered and threatened species:
17981 Sea turtles; withdrawn

Fishery conservation and managment:
17982 Atlantic sea scallops; hearing
NOTICES
Coastal zone management programs:
18025 California; extension of time
Meetings:
18025 New England and Mid-Atlantic Fishery Management Council; extra date

**National Science Board**
NOTICES
18065 Meetings; Sunshine Act

**Nuclear Regulatory Commission**
NOTICES
Applications, etc.:
18054 Baltimore Gas & Electric Co.
18055 Commonwealth Edison Co.
Meetings:
18055 Nuclear waste repositories; siting guidelines

**Pacific Northwest Electric Power and Conservation Planning Council**
NOTICES
18066 Meetings; Sunshine Act

**Securities and Exchange Commission**
NOTICES
Hearings, etc.:
18056 Central & South West Corp. et al.
18057 Putnam Management Co., Inc., et al.
Self-regulatory organizations; proposed rule changes:
18058 Municipal Securities Rulemaking Board
18059 Philadelphia Stock Exchange, Inc., et al.

**Soil Conservation Service**
NOTICES
Environmental statements; availability, etc.:
17983 Manistee River RC&D Measure, Mich.

**Surface Mining Reclamation and Enforcement Office**
PROPOSED RULES
Permanent program submission; various States:
17974 Pennsylvania; comment period reopened
17975 Virginia

**Tennessee Valley Authority**
NOTICES
18066 Meetings; Sunshine Act

**Textile Agreements Implementation Committee**
NOTICES
Export visa requirements; certification, etc.:
18026 Taiwan
Textile consultation; review of trade:
18027 Peru

**Trade Representative, Office of United States**
NOTICES
Unfair trade practices, petitions, etc.:
18056 Motion Picture Export Association of America; termination

**Transportation Department**
*See* Coast Guard; Federal Highway Administration; Maritime Administration.

**Treasury Department**
*See also* Fiscal Service; Internal Revenue Service.
NOTICES
Boycotts, international:
18061 Guidelines; additional

**Wage and Hour Division**
PROPOSED RULES
17974 Employment of homeworkers; homework in the knitted outerwear industry; restrictions rescinded; extension of time

---

**Separate Parts in This Issue**

**Part II**
18072 Department of Commerce, National Oceanic and Atmospheric Administration

**Part III**
18076 Environmental Protection Agency

---

**Reader Aids**
Additional information, including a list of public laws, telephone numbers, and finding aids, appears in the Reader Aids section at the end of this issue.

## CFR PARTS AFFECTED IN THIS ISSUE

A cumulative list of the parts affected this month can be found in the Reader Aids section at the end of this issue.


**7 CFR**
905 ..... 17931
**Proposed Rules:**
800 ..... 17950
927 ..... 17950

**12 CFR**
226 ..... 17932
**Proposed Rules:**
701 ..... 17951
704 ..... 17953
741 ..... 17951

**15 CFR**
399 ..... 17932

**16 CFR**
**Proposed Rules:**
1500 ..... 17956

**18 CFR**
271 ..... 17934
282 ..... 17935

**21 CFR**
5 ..... 17936
**Proposed Rules:**
182 ..... 17966
184 ..... 17966

**23 CFR**
**Proposed Rules:**
810 ..... 17968

**24 CFR**
201 ..... 17936
1800 ..... 17937

**26 CFR**
**Proposed Rules:**
1 ..... 17973

**29 CFR**
**Proposed Rules:**
530 ..... 17974

**30 CFR**
**Proposed Rules:**
938 ..... 17974
946 ..... 17975

**32 CFR**
380 ..... 17937
**Proposed Rules:**
199 ..... 17976

**33 CFR**
100 ..... 17939
117 (2 documents) ..... 17939, 17940
165 ..... 17941
**Proposed Rules:**
100 ..... 17977

**40 CFR**
60 ..... 18076
**Proposed Rules:**
180 ..... 17978
439 ..... 17978

**47 CFR**
73 (3 documents) ..... 17942, 17948
**Proposed Rules:**
73 (2 documents) ..... 17979, 17980

**50 CFR**
250 ..... 18072
**Proposed Rules:**
17 ..... 17981
227 ..... 17981
650 ..... 17982

# Rules and Regulations

Federal Register
Vol. 49, No. 82
Thursday, April 26, 1984

This section of the FEDERAL REGISTER contains regulatory documents having general applicability and legal effect, most of which are keyed to and codified in the Code of Federal Regulations, which is published under 50 titles pursuant to 44 U.S.C. 1510.
The Code of Federal Regulations is sold by the Superintendent of Documents. Prices of new books are listed in the first FEDERAL REGISTER issue of each week.

## DEPARTMENT OF AGRICULTURE

### Agricultural Marketing Service

### 7 CFR Part 905

[Orange, Grapefruit, Tangerine and Tangelo Reg. 6, Amdt. 30]

### Oranges, Grapefruit, Tangerines and Tangelos Grown in Florida; Amendment of Grade Requirements

**AGENCY:** Agricultural Marketing Service, USDA.

**ACTION:** Amendment to final rule.

**SUMMARY:** This action: (1) lowers the minimum grade requirement for domestic and export shipments of Florida white and pink seedless grapefruit and imports of white and pink seedless grapefruit from Improved No. 2 (external) and U.S. No. 1 (internal) to U.S. No. 2 Russet; and (2) lowers the minimum grade requirement for domestic and export shipments of Florida Honey tangerines from Florida No. 1 Golden to U.S. No. 2 Russet. The change in minimum grade of such fruit recognizes the grade composition of the remaining fruit supply and is consistent with the available crop in the interest of growers and consumers.

**EFFECTIVE DATE:** April 23, 1984.

**FOR FURTHER INFORMATION CONTACT:** William J. Doyle, Chief, Fruit Branch, F&V, AMS, USDA, Washington, D.C. 20250, telephone 202-447-5975.

**SUPPLEMENTARY INFORMATION:** This final action has been reviewed under USDA procedures and Executive Order 12291 and has been designated a "non-major" rule. William T. Manley, Deputy Administrator, Agricultural Marketing Service, has determined that this action will not have a significant economic impact on a substantial number of small entities.

The amendment is issued under the marketing agreement and Order No. 905 (7 CFR Part 905), regulating the handling of oranges, grapefruit, tangerines and tangelos grown in Florida. The agreement and order are effective under the Agricultural Marketing Agreement Act of 1937, as amended (7 U.S.C. 601-674). This action is based upon the recommendation and information submitted by the Citrus Administrative Committee, and upon other available information. It is hereby found that the regulation of Florida white and pink seedless grapefruit and Honey tangerines as hereinafter provided, will tend to effectuate the declared policy of the act.

The minimum grade requirements, specified herein, reflect the committee's and the Department's appraisal of the need to revise the grade requirements applicable to Florida white and pink seedless grapefruit, and the grade requirements applicable to Florida Honey tangerines in recognition of the remaining available supply of such fruit. Specification of these requirements assures that the available supply of the remaining marketable fruit reaches the consumer.

Under section 8e of the act (7 U.S.C. 608e-1), whenever specified commodities, including grapefruit, are regulated under a Federal marketing order, imports of that commodity must meet the same or comparable grade, size, quality or maturity requirements as those in effect for the domestically produced commodity. Thus, grade requirements for imported white and pink seedless grapefruit will also change to conform to the grade requirements for domestic shipments of Florida white and pink seedless grapefruit.

It is impracticable and contrary to the public interest to give preliminary notice, engage in public rulemaking, and postpone the effective date until 30 days after publication in the Federal Register (5 U.S.C. 553), because of insufficient time between the date when information became available upon which this amendment is based and the effective date necessary to effectuate the declared purposes of the act. This amendment relieves restrictions on shipments of Florida white and pink seedless grapefruit, Honey tangerines and imports of white and pink seedless grapefruit. Handlers have been apprised of such provisions and the effective dates.

List of Subjects in 7 CFR Part 905

Marketing Agreements and Orders, Florida, Grapefruit, Oranges, Tangelos, Tangerines.

### PART 905—[AMENDED]

Accordingly, the provisions of § 905.306 are amended by revising the following entries in Table I paragraph (a), applicable to domestic shipments, and Table II paragraph (b), applicable to export shipments, to read as follows:

**§ 905.306 Orange, Grapefruit, Tangerine and Tangelo Regulation 6.**

(a) * * *

TABLE I

| Variety (1) | Regulation period (2) | Minimum grade (3) | Minimum diameter (in) (4) |
|---|---|---|---|
| * * * | * * * | * * * | * * * |
| Grapefruit: | | | |
| Seedless, white | Apr. 23, 1984 to Aug. 19, 1984 | U.S. No. 2 Russet | 3 5/16 |
| | On and after Aug. 20, 1984 | Improved No. 2 (external) | 3 5/16 |
| | | U.S. No. 1 (internal) | |
| Seedless, pink | Apr. 23, 1984 to Aug. 19, 1984 | U.S. No. 2 Russet | 3 5/16 |
| | On and after Aug. 20, 1984 | Improved No. 2 (external) | 3 5/16 |
| | | U.S. No. 1 (internal) | |

TABLE I —Continued

| Variety (1) | Regulation period (2) | Minimum grade (3) | Minimum diameter (in) (4) |
|---|---|---|---|
| Tangerines: Honey | Apr. 23, 1984 to Aug. 19, 1984 | U.S. No. 2 Russet | 2 9/16 |
| | On and after Aug. 20 1984 | Florida No. 1 | 2 9/16 |

(b) * * *

TABLE II

| Vcariety (1) | Regulation period (2) | Minimum grade (3) | Minimum diameter (in) (4) |
|---|---|---|---|
| Grapefruit: | | | |
| Seedless, white | Apr. 23, 1984 to Aug. 19, 1984 | U.S. No. 2 Russet | 3 5/16 |
| | On and after Aug. 20, 1984 | Improved No. 2 (External) | 3 5/16 |
| | | U.S. No. 1 (Internal) | |
| Seedless, pink | Apr. 23, 1984 to Aug. 19, 1984 | U.S. No. 2 Russet | 3 5/16 |
| | On and after Aug. 20, 1984 | Improved No. 2 (External) | 3 5/16 |
| | | U.S. No. 1 (Internal) | |
| Tangerines: Honey | Apr. 23, 1984 to Aug. 19, 1984 | U.S. No. 2 Russet | 2 9/16 |
| | On and after Aug. 20, 1984 | Florida No. 1 | 2 9/16 |

(Secs. 1–19, 48 Stat. 31, as amended; 7 U.S.C. 601–674)

Dated: April 20, 1984.

Thomas R. Clark,

*Deputy Director, Fruit and Vegetable Division, Agricultural Marketing Service.*

[FR Doc. 84–11291 Filed 4–25–84; 8:45 am]

BILLING CODE 3410–02–M

## FEDERAL RESERVE SYSTEM

## 12 CFR Part 226

[Reg. Z; TIL–1]

## Truth in Lending; Official Staff Commentary Update

*Correction*

In FR Doc. 84–9058 beginning on page 13482 in the issue of Thursday, April 5, 1984, make the following corrections:

1. On page 13485, column three, amendment 10, line five, "22(a) Accuracy of the annual percentage rate." should have started on a new line and been flush left.

2. On page 13486, column two, paragraph three, line five, "If the creditor may comply with" should appear between "disclosures." and "the".

BILLING CODE 1505–01–M

## DEPARTMENT OF COMMERCE

## International Trade Administration

## 15 CFR Part 399

[Docket No. 40451–4051]

## Decontrol of Certain Types of Laboratory Analytical Instruments for Export

**AGENCY:** Office of Export Administration, Commerce.

**ACTION:** Interim rule with request for comments.

**SUMMARY:** This rule amends the Commodity Control List (Supplement No. 1 § 399.1 of the Export Administration Regulations) by reclassifying under entry 6599G certain laboratory analytical instruments incorporating microprocessor-based controls, which have until now been classified under entry 4529B. This reclassification allows these instruments to be exported under General License G–DEST to all destinations except countries in Country Groups S and Z.

Shipments of virtually all commodities to S and Z destinations remain subject to foreign policy controls. The Department of Commerce, in consultation with the Department of Defense, has determined that national security controls on the instruments, now classified under ECCN 6599G, are no longer necessary.

This rule also adds a Commodity Interpretation to Supplement No. 1 to § 399.2 of the Regulations. The Interpretation is designed to aid exporters in determining the appropriate entry of the Commodity Control List under which certain instruments are classified.

**EFFECTIVE DATE:** April 26, 1984. Comments must be received by June 25, 1984.

**ADDRESS:** Written comments (six copies) should be sent to: Betty Ferrell, Exporter Services Division, Office of Export Administration, U.S. Department of Commerce, P.O. Box 273, Washington, D.C. 20044.

**FOR FURTHER INFORMATION CONTACT:** Richard J. Isadore, Director, Exporter Services Division (Telephone: (202) 377–4811).

**SUPPLEMENTARY INFORMATION:**

### Rulemaking Requirements and Invitation to Comment

In connection with various rulemaking requirements, the Office of Export Administration has determined that:

1. Since this regulation involves a foreign affairs function, the provisions of the Administrative Procedure Act, 5 U.S.C. 553, requiring notice of proposed rulemaking, the opportunity for public participation and a delay in effective date are inapplicable.

However, because of the importance of the issues raised by these regulations, these regulations are issued in interim form and comments will be considered in developing final regulations. Accordingly, interested persons who desire to comment are encouraged to do so at the earliest possible time to permit the fullest consideration of their views.

2. This rule removes a burden under the Paperwork Reduction Act of 1980, 44 U.S.C. 3501 *et seq.* by permitting certain commodities to be shipped under General License.

3. This rule is not subject to the requirements of the Regulatory Flexibility Act, 5 U.S.C. 601 *et seq.*

4. This rule is exempt from the requirements of Executive Order 12291 (46 FR 13193, February 19, 1981), "Federal Regulation," because it relates to a foreign affairs function of the United States.

The period for submission of comments will close (60 days after publication). All comments received before the close of the comment period will be considered by the Department in the development of final regulations. While comments received after the end of the comment period will be considered if possible, their consideration cannot be assured. Public comments that are accompanied by a request that part or all of the material be treated confidentially because of its business proprietary nature or for any other reason will not be accepted. Such comments and materials will be returned to the submitter and will not be considered in the development of final regulations.

All public comments on these regulations will be a matter of public record and will be available for public inspection and copying. In the interest of accuracy and completeness, comments in written form are preferred. If oral comments are received, they must be followed by written memoranda which will also be a matter of public record and will be available for public review and copying. Communications from agencies of the United States Government or foreign governments will not be made available for public inspection.

The public record concerning these regulations will be maintained in the International Trade Administration Freedom of Information Records Inspection Facility, Room 4001B, U.S. Department of Commerce, 14th Street and Constitution Avenue, N.W., Washington, D.C. 20230. Records in this facility, including written public comments and memoranda summarizing the substance of oral communications, may be inspected and copied in accordance with regulations published in Part 4 of Title 15 of the *Code of Federal Regulations*. Information about the inspection and copying of records at the facility may be obtained from Patricia L. Mann, the International Trade Administration Freedom of Information Officer at the above address or by calling (202) 377-3031.

List of Subjects in 15 CFR Part 399

Exports.

## PART 399—[AMENDED]

Accordingly, the Export Administration Regulations (15 CFR Parts 368-399) are amended as follows:

1. In Commodity Group 5, Electronics and Precision Instruments, of the Commodity Control List (Supplement No. 1 to § 399.1), ECCN 4529B is amended by adding to the heading after the phrase—"Other instruments, n.e.s."—the phrase—" (except those instruments exempted by Commodity Interpretation No. 8, in Supplement No. 1 to section 399.2)", and by revising the "Technical Note" to read:

*Technical Note:* Instruments incorporating computing facilities, and that are controlled by ECCN 4529B, remain controlled under ECCN 4529B, even if the computing facility has been removed. Such removal does *not* permit the instruments to be classified under ECCN 6599G.

2. In Supplement No. 1 to § 399.2, "Commodity Interpretations," Interpretation 8 is added to read as follows: *Interpretation 8: Laboratory Analytical Instruments (ECCN 6599G)* Laboratory analytical instruments having all the following characteristics are classified under ECCN 6599G:

(a) Equipped with microprocessor-based computing facilities *essential* to instrument operation;

(b) *Not* having user accessible programmability;

(c) Systems *not* incorporating FFT, array transform processors, or more advanced signal processing or image enhancement;

(d) Systems *not* incorporating the following hardware:

(1) IEEE 488 bus (instruments that would qualify for export under ECCN 6599G pursuant to this Interpretation 8, except that they contain an IEEE 488 bus, may nevertheless be exported under ECCN 6599G if they are specifically listed in Appendix A to this Interpretation),

(2) External fiber optic communication,

(3) Microprocessor development, microcomputer development and software development systems,

(4) Networking hardware and associated software, or

(5) Display Devices having more than 800 resolvable points along any one axis; and

(e) Systems *not* of the following descriptions:

(1) Calorimeters,

(2) Centrifuges used for biologicals allowing an excess of one liter volume,

(3) Liquid chromatographs allowing an output of five or more liters of product per day,

(4) Intelligent laboratory pumps and automatic samplet systems,

(5) Radiometers,

(6) Specific ion meters,

(7) Laboratory temperature controllers,

(8) Thermal analyzers having detectors, optical systems, or sensors elsewhere controlled,

(9) Titrators, and

(10) X-Ray diffractometers.

Note.—Spares, components and accessories exported with or separate from an instrument classified under ECCN 6599G may nonetheless require a validated license under another Commodity Control entry.

[This appendix will appear in the CFR.]

Appendix A

Air Particle Monitors
Air Pollution Monitors
Alkalimeters
Amino Acid Analyzers
Anemometers
Atmospheric Visibility Monitors
Brightness Photometers
Carbon-Hydrogen-Nitrogen Analyzers
Cement Testing Equipment
Centrifuges Used for Biologicals (not exceeding one liter volume)
Coagulation Analyzers
Chromatographs
—Gas
—Liquid (output restricted to less than five liters per day)
CO & $CO_2$ Analyzers
CO & $CO_2$ Alarms
Colorimeters
—linearized
—petroleum testing
—photoelectric absorption
—immersion
—reflectance
—visual, general purpose
Combustible-Gas Indicators
Combustion/Calorimeters Bombs
Elemental Analyzers for Combustion Products
Enzyme Analyzers
Hardness Testers
Humidity Meters
Hydrometers
Hygrometers
Lab. Temperature Alarms

Light Meters
Manometers
Melting Point Apparatus
Meteorological Instruments
—actinometers
—anemographs
—anemometers
—atmospheric visibility monitors
—barographs
—barometers
—ceilometers
—hypsometers
—thermographs
Moisture Meters and Analyzers—all types
Nitrogen-Oxygen Analyzers
Ozone Meters
Osmometers
Paper-Strip Electrophoresis
—high voltage
—low voltage
Petroleum Test Equipment
—aniline point determinators
—carbon residue testers
—colorimeters
—corrosion testers
—demulsifying apparatus
—doud & pour testers
—flash point testers
—grease testers
—gum testers
—melting point apparatus
—thermal analyzers
—viscometers
—viscosity testers
—wear testers
Ph Comparators
Ph Controllers, Laboratory
Ph Meters
Physical Test Equipment, general use
—abrasion testers
—creep testers
—fatigue testers
—friction meters
—hydraulic
—tensile testers
—torsion testers
Planetoriums
Planimeters
Plating & Coating Thickness Indicators
Polarimeters, all types
Polariscopes
Polarographic Analyzers
Pressure Calibrators, Laboratory
Pressure Measuring Apparatus
Pressure Monitors
Quantometric Metal Sorters
Reflectance Photometers
Reflectometers
Refractometers
Rheometers
Spectrophotometers (not including FFT or ATP's)
Stethoscopes, Electronic
Sulfur Analyzers
Sulfur Dioxide Analyzers
Surface Tension Apparatus
Tachometers, Laboratory
Temperature Indicators, Laboratory
Temperature Recorders, Laboratory
Tension Meters.
Thermal Analyzers (not having detectors, optical systems or sensors elsewhere controlled)
Thermal Conductivity Analysis Apparatus
Thermometers, Laboratory
Thermogravimetric Analysis Equipment
Tide Gauges/Recorders
Timers
Torque Meters
Turbidimeters
Turbidity Controllers, Laboratory
Ultrasonic Testers Released by ECCN 1531A
Viscometers, all types, Laboratory
Water Hardness Testers
Water Monitors, Laboratory
Water Samplers
X-Ray Quantometers

Authority: Secs. 203, 206, Pub. L. 95-223, Title II, 91 Stat. 1626, 1628 (50 U.S.C. 1702, 1704) Executive Order No. 12470 of March 30, 1984 (49 FR 13099, April 3, 1984).

Dated: April 17, 1984.

John K. Boidock,

*Director, Office of Export Administration, International Trade Administration.*

[FR Doc. 84-11404 Filed 4-24-84; 12:55 pm

BILLING CODE 3510-DT-M

## DEPARTMENT OF ENERGY

## Federal Energy Regulatory Commission

## 18 CFR Part 271

[Docket No. RM80-53]

## Maximum Lawful Prices Under the Natural Gas Policy Act

**AGENCY:** Federal Energy Regulatory Commission, DOE.

**ACTION:** Order of the Director, OPPR.

**SUMMARY:** Pursuant to the authority delegated by 18 CFR 357.307(1), the Director of the Office of Pipeline and Producer Regulation revises and publishes the maximum lawful prices prescribed under Title I of the Natural Gas Policy Act (NGPA) for the months of May, June and July 1984, Section 101(b)(6) of the NGPA requires that the Commission compute and publish the maximum lawful prices before the beginning of each month for which the figures apply.

**EFFECTIVE DATE:** May 1, 1984.

**FOR FURTHER INFORMATION CONTACT:** Kenneth A. Williams, Director, OPPR, (202) 357-8500.

### Order of the Director, OPPR

Publication of Prescribed Maximum Lawful Prices Under the Natural Gas Policy Act of 1978; Docket No. RM80-53.

Issued: April 23, 1984.

Section 101(b)(6) of the Natural Gas Policy Act of 1978 (NGPA) requires that the Commission compute and make available maximum lawful prices and inflation adjustments prescribed in Title I of the NGPA before the beginning of any month for which such figures apply.

Pursuant to this requirement and § 375.307(1) of the Commission's regulations, which delegates the publication of such prices and inflation adjustments to the Director of the Office of Pipeline and Producer Regulation, the maximum lawful prices for the months of May, June and July 1984, are issued by the publication of the price tables for the applicable quarter. Pricing tables are found in § 271.101(a) of the Commission's regulations. Table I of § 271.101(a) specifies the maximum lawful prices for gas subject to NGPA sections 102, 103, 106(b)(1)(B), 107(c)(5), 108 and 109. Table II of § 271.101(a) specifies the maximum lawful prices for sections 104 and 106(a) of the NGPA. Table III of § 271.102(c) contains the inflation adjustment factors. The maximum lawful prices and the inflation adjustment factors for the periods prior to May 1984 are found in the tables in §§ 271.101 and 271.102.

### List of Subjects in 18 CFR Part 271

Natural gas.

Kenneth A. Williams,

*Director, Office of Pipeline and Producer Regulation.*

## PART 271—[AMENDED]

### § 271.101 [Amended]

1. Section 271.101(a) is amended by inserting the maximum lawful prices for May, June and July 1984 in Tables I and II.

### § 271.102 [Amended]

2. Section 271.102(c) is amended by inserting the inflation adjustment for the months of May, June and July 1984 in Table III.

TABLE I.—NATURAL GAS CEILING PRICES

[Other than NGPA sections 104 and 106(a)]

| Subpart of part 271 | NGPA section | Category of gas | Maximum lawful price per MMBtu for deliveries in— May 1984 | June 1984 | July 1984 |
|---|---|---|---|---|---|
| B | 102 | New Natural Gas, Certain OCS Gas | $3.680 | $3.705 | $3.730 |
| C | 103 | New, Onshore Production Wells | 2.839 | 2.839 | 2.909 |
| F | 106(b)(1)(B) | Alternative Maximum Lawful Price for Certain Intrastate Rollover Gas | 1.649 | 1.655 | 1.661 |
| G | 107(c)(5) | Gas Produced from Tight Formations | 5.778 | 5.798 | 5.818 |
| H | 108 | Stripper Gas | 3.942 | 3.968 | 3.994 |
| I | 109 | Not Otherwise covered | 2.391 | 2.399 | 2.407 |

TABLE II.—NATURAL GAS CEILING PRICES: NGPA SECTIONS 104 AND 106(A)

[Subpart D, Part 271]

| Category of natural gas | Type of sale or contract | Maximum lawful price per MMBtu for deliveries made in— May 1984 | June 1984 | July 1984 |
|---|---|---|---|---|
| Post-1974 gas | All producers | $2.391 | $2.399 | $2.407 |
| 1973–1974 Biennium gas | Small producer | 2.025 | 2.032 | 2.039 |
| | Large producer | 1.545 | 1.550 | 1.555 |
| Interstate Rollover gas | All producers | .888 | .891 | .894 |
| Replacement contract gas or recompletion gas | Small producer | 1.136 | 1.140 | 1.144 |
| | Large producer | .870 | .873 | .876 |
| Flowing gas | Small producer | .574 | .576 | .578 |
| | Large producer | .486 | .488 | .490 |
| Certain Permian Basin gas | Small producer | .678 | .680 | .682 |
| | Large producer | .597 | .599 | .601 |
| Certain Rocky Mountain gas | Small producer | .678 | .680 | .682 |
| | Large producer | .574 | .576 | .578 |
| Certain Appalachian Basin gas | North subarea contracts dated after 10-7-69 | .543 | .545 | .547 |
| | Other contracts | .504 | .506 | .508 |
| Minimum rate gas [1] | All producers | .296 | .297 | .298 |

[1] Prices for minimum rate gas are expressed in terms of dollars per Mcf, rather than MMBtu.

TABLE III.—INFLATION ADJUSTMENT

| Month of delivery 1984 | Factor by which price in preceding month is multiplied |
|---|---|
| May | 1.00351 |
| June | 1.00351 |
| July | 1.00351 |

[FR Doc. 84-11281 Filed 4-25-84; 8:45 am]

BILLING CODE 6717-01-M

## 18 CFR Part 282

**[Docket No. RM79-14]**

## Publication of Incremental Pricing Acquisition Cost Thresholds Under Title II of the NGPA

**AGENCY:** Federal Energy Regulatory Commission, DOE.

**ACTION:** Order Prescribing Incremental Pricing Thresholds.

**SUMMARY:** The Director of the Office of Pipeline and Producer Regulation is issuing the incremental pricing acquisition cost thresholds prescribed by Title II of the Natural Gas Policy Act and 18 CFR 282.304. The Act requires the Commission to compute and publish the threshold prices before the beginning of each month for which the figures apply. Any cost of natural gas above the applicable threshold is considered to be an incremental gas cost subject to incremental pricing surcharging.

**EFFECTIVE DATE:** May 1, 1984.

**FOR FURTHER INFORMATION CONTACT:** Kenneth A. Williams, Federal Energy Regulatory Commission, 825 N. Capitol Street, NE., Washington, D.C. 20426 (202) 357-8500.

### Order of the Director, OPPR

Publication of Prescribed Incremental Pricing Acquisition Cost Threshold of the NGPA of 1978; Docket No. RM79-14.

Issued: April 23, 1984.

Section 203 of the NGPA requires that the Commission compute and make available incremental pricing acquisition cost threshold prices prescribed in Title II before the beginning of any month for which such figures apply.

Pursuant to that mandate and pursuant to § 375.307(1) of the Commission's regulations, delegating the publication of such prices to the Director of the Office of Pipeline and Producer Regulation, the incremental pricing acquisition cost threshold prices for the month of May 1984 is issued by the publication of a price table for the applicable month. The incremental pricing acquisition cost threshold prices for months prior to January 1984 are found in the tables in §282.304.

### List of Subject in 18 CFR Part 282

Natural gas.

Kenneth A. Williams,

*Director, Office of Pipeline and Producer Regulation.*

TABLE I.—INCREMENTAL PRICING ACQUISITION COST THRESHOLD PRICES

[Calendar Year 1984]

| | January | February | March | April | May |
|---|---|---|---|---|---|
| Incremental pricing threshold | $2.283 | $2.291 | $2.299 | $2.307 | $2.315 |
| NGPA section 102 threshold | 3.586 | 3.609 | 3.632 | 3.656 | 3.680 |
| NGPA section 109 threshold | 2.359 | 2.367 | 2.375 | 2.383 | 2.391 |
| 130 percent of No. 2 fuel oil in New York City threshold | 7.730 | 7.570 | 7.570 | 8.550 | 8.590 |

[FR Doc. 84-11280 Filed 4-25-84; 8:45 am]

BILLING CODE 6717-01-M

## DEPARTMENT OF HEALTH AND HUMAN SERVICES

### Food and Drug Administration

### 21 CFR Part 5

### Delegations of Authority and Organization; Director, Center for Veterinary Medicine, et al.

**AGENCY:** Food and Drug Administration.

**ACTION:** Final rule.

**SUMMARY:** The Food and Drug Administration (FDA) is amending the regulations for delegations of authority on new animal drug matters to add a new delegation to the Director and Deputy Director, Center for Veterinary Medicine (CVM) (formerly Bureau of Veterinary Medicine). The new delegation will expedite the publication of notices of availability of Public Master Files.

**EFFECTIVE DATE:** April 26, 1984.

**FOR FURTHER INFORMATION CONTACT:** Robert L. Miller, Office of Management and Operations (HFA-340), Food and Drug Administration, 5600 Fishers Lane, Rockville, MD 20857, 301-443-4976.

**SUPPLEMENTARY INFORMATION:** In the Federal Register of January 14, 1983 (48 FR 1922), the new animal drug procedural regulations were amended to establish the safety and effectiveness data collection requirements needed to support approval of minor use new animal drugs. The intent of the amendment was to provide incentive for the development, and submission for approval, of applications for new animal drugs for use in minor species and for minor use in major species of animals. FDA has received data from several sources funded by public monies which fulfill some of the data requirements for approval of a new animal drug application. These data collections have been designated as Public Master Files, and interested persons are notified of their availability through publication of a Federal Register notice. The authority to publish these notices is being redelegated to CVM officials under § 5.84(b).

Section 5.84 is being amended by revising the title to read: *Issuance of notices, proposals, and orders relating to new animal drugs and feeds bearing or containing new animal drugs.* The introductory text of the section is redesignated paragraph (a) and the authorities delegated are modified to cover feeds bearing or containing new animal drugs.

New paragraph (b) is added which delegates to the Director and Deputy Director, CVM, the authority to issue notices of availability of Public Master Files containing data acceptable for use in applications for new animal drugs and feeds bearing or containing new animal drugs.

Further redelegation of the authority delegated is not authorized. Authority delegated to a position by title may be exercised by a person officially designated to serve in such position in an acting capacity or on a temporary basis.

### List of Subjects in 21 CFR Part 5

Authority delegations (Government agencies), Organization and functions (Government agencies).

Therefore, under the Federal Food, Drug, and Cosmetic Act (sec. 701(a), 52 Stat. 1055 (21 U.S.C. 371(a))) and under the authority delegated to the Commissioner of Food and Drugs (21 CFR 5.10), Part 5 is amended by revising § 5.84 to read as follows:

### PART 5—DELEGATIONS OF AUTHORITY AND ORGANIZATION

**§ 5.84 Issuance of notices, proposals, and orders relating to new animal drugs and feeds bearing or containing new animal drugs.**

(a) The Director and Deputy Director, Center for Veterinary Medicine (CVM), are authorized to:

(1) Issue notices of opportunity for a hearing on proposals to refuse approval or to withdraw approval of new animal drug applications, and supplements thereto, for drugs for animal use and feeds bearing or containing new animal drugs, submitted pursuant to section 512 of the Federal Food, Drug, and Cosmetic Act;

(2) Issue notices refusing or withdrawing approval when opportunity for hearing has been waived; and

(3) Issue proposals and orders to revoke and amend regulations for new animal drugs for drugs for animal use and feeds bearing or containing new animal drugs, corresponding to said action on such applications.

(b) The Director and Deputy Director, CVM, are authorized to issue notices of availability of Public Master Files containing data acceptable for use in applications for new animal drugs for drugs for animal use and feeds bearing or containing new animal drugs.

*Effective date.* This regulation shall become effective April 26, 1984.

(Sec. 701(a), 52 Stat. 1055 (21 U.S.C. 371(a)).)

Dated: April 18, 1984.

William F. Randolph,

*Acting Associate Commissioner for Regulatory Affairs.*

[FR Doc. 84-11193 Filed 4-25-84; 8:45 am]

BILLING CODE 4160-01-M

## DEPARTMENT OF HOUSING AND URBAN DEVELOPMENT

### Office of the Assistant Secretary for Housing—Federal Housing Commissioner

### 24 CFR Part 201

**[Docket No. N-84-1370; FR-1551]**

### Property Improvement and Manufactured Home Loans, Rule-Related Notice; Correction

**AGENCY:** Office of the Assistant Secretary for Housing—Federal Housing Commissioner, HUD.

**ACTION:** Rule-related notice; correction.

**SUMMARY:** This document corrects a rule-related notice published in the Federal Register on April 11, 1984 (49 FR 14335), that implemented a final rule amending Part 201 of Title 24, Code of Federal Regulations, to provide for new high-cost area loan limits for combination manufactured home and lot loans and for individual lot loans. The purpose of this document is to correct the maximum manufactured home loan limit for Alaska, Guam, and Hawaii.

**FOR FURTHER INFORMATION CONTACT:** William L. Halpern, Acting Director, Office of Title I Insured Loans, (202) 755-6680. This is not a toll-free number.

Accordingly, the following correction is being made to FR Doc. 84-9681 appearing on page 14335 in the April 11, 1984 issue of the Federal Register:

(1) On page 14335, third column, item 2, correct, ". . . $66,700 . . ." to read ". . . $56,700 . . .".

Authority: Section 7(d), Department of Housing and Urban Development Act (42 U.S.C. 3535(d)).

Dated: April 23, 1984.

Grady J. Norris,

*Assistant General Counsel for Regulations.*

[FR Doc. 84-11318 Filed 4-25-84; 8:45 am]

BILLING CODE 4210-27-M

## Solar Energy and Energy Conservation Bank

### 24 CFR Part 1800

[Docket No. R-84-1053; FR-1700]

### Financial Assistance Program of the Solar Energy and Energy Conservation Bank

*Correction*

In FR Doc. 84-7024 beginning on page 9865 in the issue of Friday, March 16, 1984 make the following correction:

On page 9893, first column, "§ 1800.12" should read "§ 1800.123".

BILLING CODE 1505-01-M

---

## DEPARTMENT OF DEFENSE

### Office of the Secretary

### 32 CFR Part 380

[DoD Directive 5141.2]

### Director of Operational Test and Evaluation; Delegation of Authority

**AGENCY:** Office of the Secretary, DoD.

**ACTION:** Final rule.

**SUMMARY:** The Secretary of Defense has assigned responsibilities and functions to the Director of Operational Test and Evaluation (Director, OT&E), and has delegated specific authorities. This rule (DoD Directive 5141.2) serves as the DoD instrument that authorizes the Director, OT&E, to carry out his charter.

**EFFECTIVE DATE:** This rule was approved and signed by the Deputy Secretary of Defense on April 2, 1984, and is effective as of that date.

**FOR FURTHER INFORMATION CONTACT:** Mr. Howard Becker, Directorate for Organizational and Management Planning, Office of the Deputy Assistant Secretary of Defense (Administration), Washington, D.C. 20301, telephone 202-697-0709.

**SUPPLEMENTARY INFORMATION:** This information is submitted in compliance with the requirements of section 551(a)(1) of Title 5, United States Code, and 1 CFR 305.76.

List of Subjects in 32 CFR Part 380

Organization and functions (government agencies), Operational test and evaluation.

Accordingly, 32 CFR, Chapter 1, is amended by adding a new Part 380, reading as follows:

## PART 380—DIRECTOR OF OPERATIONAL TEST AND EVALUATION

Sec.
380.1 Purpose.
380.2 Definitions.
380.3 Policy.
380.4 Responsibilities.
380.5 Functions.
380.6 Relationships.
380.7 Authorities.

Authority: 10 U.S.C. 136.

### § 380.1 Purpose.

This Part: (a) Implements section 136a of title 10, U.S.C. which establishes the position of Director of Operational Test and Evaluation (Director, OT&E).

(b) Assigns responsibilities, functions, relationships, and authorities, as prescribed herein, to the Director, OT&E, pursuant to the authority vested in the Secretary of Defense under title 10, U.S.C.

### § 380.2 Definitions.

(a) *DoD Components.* The Office of the Secretary of Defense (OSD); the Military Departments; the Organization of the Joint Chiefs of Staff (OJCS); the Unified and Specified Commands; the Office of the Inspector General, Department of Defense; and the Defense Agencies. The term "Military Services" as used herein, refers to the Army, the Navy, the Air Force, and the Marine Corps.

(b) *Independent Test Agency.* The Army Operational Test and Evaluation Agency, the Navy Operational Test and Evaluation Force, the Air Force Operational Test and Evaluation Command, and the Marine Corps Operational Test and Evaluation Agency.

(c) *Low Rate Initial Production (LRIP).* The production of a system in limited quantity to be used in OT&E for verification of production engineering and design maturity and to establish a production base.

(d) *Major Defense Acquisition Program.* As specified in section 136a of title 10, U.S.C.

(1) A DoD acquisition program that is not a highly sensitive classified program (as determined by the Secretary of Defense) and: (i) That is designated by the Secretary of Defense as a major defense acquisition program; or

(ii) That is estimated by the Secretary of Defense to require an eventual total expenditure for research, development, test, and evaluation of more than 200 million dollars (based on fiscal year 1980 constant dollars) or an eventual total expenditure for procurement of more than 1 billion dollars (based on fiscal year 1980 constant dollars).

(2) A DoD acquisition program that is so designated by the Director, OT&E, for the purpose of carrying out the responsibilities, functions, and authorities of this Directive.

(e) *Operational Test and Evaluation.* The field test, under realistic combat conditions, of any item of (or key component of) weapons, equipment, or munitions for the purpose of determining the effectiveness and suitability of the weapons, equipment, or munitions for use in combat by typical military users; and the evaluation of the results of such test.

### § 380.3 Policy.

(a) Within the Department of Defense it is recognized that operational testing is the continuum of realistic, operational field tests conducted by a Military Service independent test agency. Operational testing begins during the development period before a final decision to proceed beyond low rate initial production. this continuum of tests will employ increasing operational realism as engineering design nears its final form to provide an independent measure of development progress and of the ultimate operational effectiveness and suitability of weapon systems, equipment, or munitions, or their components. Operational testing of production (or production-representative) articles is intended to confirm that the items actually tested are effective and suitable for combat.

(b) A follow-on phase or phases of operational testing on production systems, equipment, or munitions, or their components are normally conducted after the decision is made to proceed beyond low rate initial production to assess the operational effectiveness and suitability of any changes made in the systems, equipment, or munitions, or their components.

### § 380.4 Responsibilities.

The *Director of Operational Test and Evaluation* shall serve as the Principal Staff Assistant and advisor to the Secretary of Defense on OT&E in the Department of Defense and the principal OT&E official within the senior management of the Department of Defense. In this capacity, the Director, OT&E, shall: (a) Prescribe policies and procedures for the conduct of OT&E within the Department of Defense.

(b) Provide advice and make recommendations to the Secretary of Defense, and issue guidance to and consult with the heads of the DoD Components with respect to OT&E in the Department of Defense in general,

and with respect to specific OT&E to be conducted in connection with a major defense acquisition program.

(c) Designate selected special interest weapons, equipment, or munitions as major defense acquisition programs, as the Director, OT&E considers appropriate to carry out section 136a of title 10, U.S.C. and the responsibilities functions, and authorities assigned to the Director, OT&E under this Part. Such a designation applies exclusively to the implementation of section 136a of title 10, U.S.C and this Part, and does not extend to other purposes for which the term may be used outside of this context.

(d) Develop systems and standards for the administration and management of approved OT&E plans for major defense acquisition programs.

(e) Monitor and review all OT&E in the Department of Defense to ensure adherence to approved policies and standards.

(f) Coordinate operational testing conducted jointly by more than one DoD Component.

(g) Coordinate Joint Operational Test and Evaluation (JOT&E) programs to obtain information pertinent to operational doctrine, tactics, and procedures.

(h) Initiate plans, programs, actions, and taskings to ensure that OT&E for major defense acquisition programs is designed to evaluate the operational effectiveness and suitability of U.S. military weapon systems.

(i) Review and make recommendations to the Secretary of Defense on all budgetary and financial matters relating to OT&E, including operational test facilities and equipment.

(j) Review and report to the Secretary of Defense on the adequacy of operational test planning, priorities, support resources, execution, evaluation, and reporting for major defense acquisition programs while avoiding unnecessary duplication.

(k) Promote coordination, cooperation, and mutual understanding within the Department of Defense and between the Department of Defense and other federal agencies, state, local and foreign governments, and the civilian community with regard to OT&E matters.

(l) Serve on boards, committees, and other groups pertaining to assigned OT&E, and represent the Secretary of Defense on OT&E matters outside the Department of Defense.

(m) Execute such other related responsibilities as the Secretary of Defense may prescribe.

**§ 380.5 Functions.**

The Director, OT&E, shall carry out the responsibilities described in § 380.4, above, for all aspects of OT&E, to include the following functions:

(a) OT&E programs of the DoD Components, to include their operational test facilities and resources and the coordination of Military Service OT&E activities.

(b) JOT&E programs and Joint Military Service operational testing.

(c) Analysis of OT&E results on all major defense acquisition programs.

(d) Review of budget submissions to determine the adequacy of OT&E funding.

(e) Approval of OT&E sections of the DoD Test and Evaluation Master Plan (TEMP) for major defense acquisition programs.

(f) Review of new major system requirements documents, system concept papers, decision coordinating papers and, if appropriate, integrated program summaries for OT&E implications.

(g) Enhancement of operational test realism.

(h) Development and administration of an OT&E data base.

**§ 380.6 Relationships.**

(a) In the performance of assigned functions, the Director, OT&E, shall:

(1) Report directly to the Secretary and Deputy Secretary of Defense without intervening review or approval.

(2) Provide guidance to and consult with the Secretary and Deputy Secretary of Defense and the Secretaries of the Military Departments with respect to OT&E in the Department of Defense in general and with respect to specific OT&E activities to be conducted in connection with major defense acquisition programs.

(3) Cooordinate and exchange information with officials of DoD Components exercising collateral or related functions. In particular, the Director, OT&E, shall consult closely with, but be independent of, the Under Secretary of Defense for Research and Engineering.

(4) Use existing facilities and services of the Department of Defense or other federal agencies, and allied countries whenever practicable, to avoid duplication and to achieve maximum realism.

(5) Serve as a permanent member of the Defense Systems Acquisition Review Council and the Defense Resources Board for the purpose of carrying out the principles and policies of DoD Directive 5000.1 and DoD Instruction 5000.2 and DoD Directives System issuances pertaining to test and evaluation activities.

(b) Other OSD officials and heads of DoD Components shall coordinate on all OT&E matters as prescribed herein.

(c) The Secretaries of the Military Departments shall report promptly to the Director, OT&E, the results of all OT&E conducted by the Military Departments and on all studies conducted by the Military Departments in connection with their OT&E activities.

**§ 380.7 Authorities.**

The Director, OT&E, is hereby delegated authority to:

(a) Issue DoD Instructions, DoD publications, and one-time directive-type memoranda, consistent with DoD Directive 5025.1-M that implement policies approved by the Secretary of Defense in order to carry out the functions assigned to the Director, OT&E. Instructions to the Military Departments shall be issued through the Secretaries of those Departments or their designees. Instructions to Unified and Specified Commands shall be issued through the JCS.

(b) Obtain reports, information, advice, and assistance, consistent with DoD Directive 5000.19 as necessary in carrying out assigned functions. Have access to all records and data in the DoD (including those of each DoD Component) that the Director, OT&E, considers necessary to review in order to carry out assigned functions.

(c) Act as prior approval authority for OT&E section of the TEMPS and for OT&E funding for each major defense acquisition program. Operational testing of a major defense acquisition program may not be conducted until the Director, OT&E, has approved in writing the adequacy of the plans, including the adequacy of projected levels of funding and resources for OT&E to be conducted in connection with that program.

(d) Require, as the Director, OT&E, determines necessary, that observers designated by the Director, OT&E, be present during the preparation for and the conduct of the test part of any OT&E conducted by DoD Components.

(e) Monitor and review all OT&E conducted in the Department of Defense and analyze the results of OT&E conducted for each major defense acquisition program.

(1) The Director, OT&E, shall submit a report to the Secretary of Defense and to the Committees on Armed Services and on Appropriations of the Senate and House of Representatives that addresses specifically:

(i) The adequacy of the test and evaluation performed; and

(ii) Whether the results confirm the effectiveness and combat suitability of the items or components actually tested.

(2) Copies of the report will be provided to appropriate DoD officials and Components to facilitate the development of comments by the Secretary of Defense.

(3) A final decision to proceed with a major defense acquisition program beyond low rate initial production may not be made until the report has been submitted to the Secretary of Defense and received by the Armed Services and Appropriations Committees.

(f) Prepare an annual report for the Secretary of Defense and the Congress by January 15 of each year summarizing the OT&E activities of the Department of Defense during the preceding fiscal year.

(1) The report shall include such comments and recommendations as the Director, OT&E, considers appropriate, including comments and recommendations on resources and facilities available for OT&E and levels of funding made available for OT&E activities.

(2) Copies of this report shall be provided to appropriate DoD officials and Components to facilitate comments by the Secretary of Defense, if desired.

(g) Communicate directly with the heads of DoD Components. Communications to commanders of the Unified and Specified Commands shall be coordinated with the JCS.

(h) Arrange for DoD participation in nondefense governmental programs for which the Director, OT&E, is assigned primary DoD cognizance.

(i) Communicate with other government agencies, representatives of the Legislative Branch, and members of the public, as appropriate, in carrying out assigned functions.

Dated: April 23, 1984.

M. S. Healy,

*OSD Federal Register Liaison Officer, Department of Defense.*

[FR Doc. 84-11236 Filed 4-25-84; 8:45 am]

BILLING CODE 3810-01-M

## DEPARTMENT OF TRANSPORTATION

### Coast Guard

### 33 CFR Part 100

[CGD11 84-34]

### Special Local Regulations: Golden Gate to Spruce Goose Race

**AGENCY:** Coast Guard, DOT.

**ACTION:** Final rule.

**SUMMARY:** Special local regulations are being adopted for the Golden Gate to Spruce Goose Race. This event will take place on May 12, and 13, 1984, from San Francisco to Long Beach, California. The regulations are needed to provide for the safety of life on navigable waters during the event.

**EFFECTIVE DATE:** These regulations become effective on May 13, 1984 and terminate on May 13, 1984.

**FOR FURTHER INFORMATION CONTACT:** LTJG Jorge Arroyo, Commander (bb), Eleventh Coast Guard District, 400 Oceangate, Long Beach, California 90822, (213) 590-2331.

**SUPPLEMENTARY INFORMATION:** A notice of proposed rule making has not been published for these regulations and they are being made effective in less than 30 days from the date of publication. Although the application for this event was received at the Twelfth Coast Guard District Boating Affairs Office in November 1983, the final course and a determination of the area where these regulations will take effect was not agreed upon until March 5, 1984, therefore, there was not sufficient time to publish proposed rules in advance of the event or to provide for a delayed effective date. Nevertheless, interested persons wishing to comment may do so by submitting written comments to the office listed under "FOR FURTHER INFORMATION CONTACT" in this preamble. Commenters should include their name and address, identify this notice CGD11-84-34, and give reasons for their comments. Based on comments received, the regulation may be changed.

*Drafting Information:* The drafters of this regulation are LTJG Jorge Arroyo, Project Officer, Chief, Boating Affairs Branch, Eleventh Coast Guard District, and LT Joseph R. McFaul, Project Attorney, Legal Office, Eleventh Coast Guard District.

*Discussion of Regulation:* Robert Nordskog's "Golden Gate to Spruce Goose Race" will take place on May 12 and 13, from San Francisco to Long Beach with intermediate stops at Monterey, Morro Bay (overnight stop), Santa Barbara, and finishing at the Spruce Goose in Long Beach. Approximately 10 of the best production model offshore powerboats ranging in length from 30 to 45 feet will take up the challenge of this benefit race (proceeds from this race will be donated to the United States Olympic Committee).

Vessels desiring to transit the regulated area may do so only with clearance from a patrolling law enforcement vessel or an event committee boat.

List of Subjects in 33 CFR Part 100

Marines safety, Navigation (water).

### PART 100—SAFETY OF LIFE ON NAVIGABLE WATERS

*Final Regulations:* In consideration of the foregoing, Part 100 of Title 33, Code of Federal Regulations, is amended by adding the following section:

**§ 100.35—11-84-34 Long Beach Harbor, Golden Gate to Spruce Goose Race.**

(a) *Regulated Area:* The Long Beach Pilot Area; and, a corridor 500 yards wide from the Long Beach Main Channel Entrance (Queen's Gate) northward to the southeastern corner of Pier "J", and, all waters within 500 yards of the eastern shore of Pier "J" and the Spruce Goose Dome.

(b) *Effective Date:* The regulated area will be closed intermittently to all vessel traffic from 2:00 p.m. to 3:00 p.m. on May 13, 1984.

(c) *Special Local Regulations:* (1) No vessels, other than participants, U.S. Coast Guard operated and employed small craft, public vessels, state and local law enforcement agencies and the sponsor's vessels shall enter the regulated area during the above hours, unless cleared for such entry by or through a patrolling law enforcement vessel, or an event committee boat.

(2) When hailed by Coast Guard or Coast Guard Auxiliary vessels patrolling the event area, a vessel shall come to an immediate stop. Vessels shall comply with all directions of the designated Coast Guard Regatta Patrol.

(3) These regulations are temporary in nature and shall cease to be in effect at the end of the period set forth.

(46 U.S.C. 454; 33 CFR 100.35; and 33 CFR 1.01-1)

Dated: April 13, 1984.

F. P. Schubert,

*Rear Admiral, U.S. Coast Guard, Commander, Eleventh Coast Guard District.*

[FR Doc. 84-11272 Filed 4-25-84; 8:45 am]

BILLING CODE 4910-14-M

### 33 CFR Part 117

[CGD7 83-04]

### Drawbridge Operation Regulations; Banana River, Florida

**AGENCY:** Coast Guard, DOT.

**ACTION:** Final rule.

**SUMMARY:** At the request of Brevard County, Florida, the Coast Guard is changing the regulations governing the Mathers Bridge (State Road 3) at Indian Harbor Beach by requiring that advance notice of opening be given between 10

p.m. and 6 a.m. on weekdays. This change is being made because of limited requests for opening the draw during this period. This action will relieve the bridge owner of the burden of having a person constantly available to open the draws and still provide for the reasonable needs of navigation.

**EFFECTIVE DATE:** This rule becomes effective on May 25, 1984.

**FOR FURTHER INFORMATION CONTACT:** Mr. James R. Kretschmer, Senior Bridge Administration Specialist, telephone (305) 350-4108.

**SUPPLEMENTARY INFORMATION:** On 28 July 1983 the Coast Guard published a proposed rule 48 FR 34293 concerning this amendment. The Commander, Seventh Coast Guard District, also published this proposal as a public notice dated 19 August 1983. In this notice interested persons were given until 19 September 1983 to submit comments.

*Drafting Information:* The drafters of this rule are Mr. Walter Paskowsky, Bridge Administration Specialist, project officer, and Lieutenant Commander K. E. Gray, project attorney.

*Discussion of Comments:* No comments were received in response to publication in the Federal Register. Seven letters were received in response to the Public Notice. One commenter suggested that the bridge be placed on timed openings. Six commenters objected that the bridge be placed on timed openings. Six commenters objected to the proposal for various reasons including increased weekend nighttime usage of the waterway, the inconvenience of giving three hours advance notice, and the difficulty of telephone communication for inbound vessels. An examination of the bridge logs for 1983 showed that 47 of the 78 openings which occurred between 10 p.m. and 6 a.m. were on Friday, Saturday and holiday evenings. Therefore, the proposal was changed to provide for constant attendance on Friday, Saturday and holiday evenings with 2 hours advance notification required from 10 p.m. until 6 a.m. Sunday through Friday. At all other times, the draw shall open on signal. An economic evaluation has not been prepared because no commercial enterprises will be affected and vessels using the waterway are exclusively recreational craft.

*Economic Assessment and Certification:* These final regulations have been reviewed under the provisions of Executive Order 12291 and have been determined not to be major rules. They are considered to be nonsignificant in accordance with guidelines set out in the Policies and Procedures for Simplification, Analysis, and Review of Regulations (DOT Order 2100.5 of 22 May 1980). As explained above, an economic evaluation has not been conducted since its impact is expected to be minimal. In accordance with section 605(d) of the Regulatory Flexibility Act (5 U.S.C. 605(b)), it is also certified that these rules will not have a significant economic impact on a substantial number of small entities.

**List of Subjects in 33 CFR Part 117**

Bridges.

## PART 117—DRAWBRIDGE OPERATION REGULATIONS; BANANA RIVER, INDIAN HARBOR BEACH, FLORIDA

*Regulations:* In consideration of the foregoing, Part 117 of Title 33, Code of Federal Regulations, is amended by adding a new § 117.245(h)(27a) to read as follows:

**§ 117.245 Navigable waters discharging into the Atlantic Ocean south of and including Chesapeake Bay and into the Gulf of Mexico, except the Mississippi River and its tributaries and outlets; bridges where constant attendance of draw tenders is not required.**

* * * * *

(h) * * *

(27a) Banana River, mile 0.5, Mathers Bridge, State Road A-1-A, Indian Harbor Beach, Florida. From 10 p.m. to 6 a.m., Monday through Friday, except federal holidays, the draw shall open on signal if at least two hours advance notice is given. At all other times the draw shall open on signal.

* * * * *

(33 U.S.C. 499; 49 CFR 1.46(c)(6); 33 CFR 1.05-1(g)(3))

Dated: April 16, 1984.

**A. D. Breed,**

*Captain, U.S. Coast Guard, Commander, Seventh Coast Guard District, Acting.*

[FR Doc. 84-11271 Filed 4-25-84; 8:45 am]

BILLING CODE 4910-14-M

---

**33 CFR Part 117**

**[CGD13 84-01]**

## Drawbridge Operation Regulations; Lake Washington Ship Canal, Washington

**AGENCY:** Coast Guard, DOT.

**ACTION:** Final rule.

**SUMMARY:** At the request of the City of Seattle, the Coast Guard is changing the regulations governing all of the highway drawbridges across the Lake Washington Ship Canal, in Seattle, Washington, by requiring that the draws of the Ballard, Fremont Avenue, University, and Montlake Boulevard bridges shall open on signal from 11:00 p.m. to 7:00 a.m. if at least one hour notice is given by telephone, radiotelephone, or otherwise to the drawtender at the Fremont Avenue drawbridge. This change is being made to allow more efficient use of drawtenders during nighttime hours. This action will accommodate the needs of vehicular traffic and still provide for the reasonable needs of navigation.

**EFFECTIVE DATE:** This rule becomes effective on May 25, 1984.

**FOR FURTHER INFORMATION CONTACT:** John E. Mikesell, Chief, Bridge Section, Aids to Navigation Branch (Telephone: (206) 442-5864).

**SUPPLEMENTARY INFORMATION:** On January 26, 1984, the Coast Guard published a proposed rule (49 FR 3212) concerning this change. The Commander, Thirteenth Coast Guard District also published this proposal as a Public Notice dated January 26, 1984. In each notice interested persons were given until March 12, 1984, to submit comments.

*Drafting Information:* The drafters of this notice are: John E. Mikesell, project officer, and Lieutenant Aubrey W. Bogle, project attorney.

*Discussion of Comments:* Four responses were received to the Federal Register and Coast Guard Public Notice. All responses were received from federal agencies who routinely respond to Coast Guard public notices. Three offered no objection and the other offered no comment to the proposal.

*Economic Assessment and Certification:* These final regulations have been reviewed under the provisions of Executive Order 12291 and have been determined not to be major rules. They are considered to be nonsignificant in accordance with guidelines set out in the Policies and Procedures for Simplification, Analysis, and Review of Regulations (DOT Order 2100.5 of 5-22-80). As explained above, an economic evaluation has not been conducted since its impact is expected to be minimal. In accordance with § 605(b) of the Regulatory Flexibility Act (5 U.S.C. 605(b)), it is certified that these rules will not have a significant economic impact on a substantial number of small entities.

**List of Subjects in 33 CFR Part 117**

Bridges.

## PART 117—DRAWBRIDE OPERATION REGULATIONS

*Proposed Regulations:* In consideration of the foregoing, Part 117 of Title 33 Code of Federal Regulations, is amended by revising § 117.795(b)(2) and adding § 117.795(b)(3) to read as follows:

**§ 117.795 Lake Washington Ship Canal; bridges.**

* * * * *

(b) * * *

(2) Shall open on signal from 11:00 p.m. to 7:00 a.m., if at least one hour notice is given by telephone, radiotelephone, or otherwise to the drawtender at the Fremont Avenue drawbridge.

(3) The owner of these bridges shall keep conspicuously posted on both upstream and downstream sides of each bridge, in a manner that it can be easily read from an approaching vessel, a summary of these regulations, together with a notice stating exactly how the drawtender or authorized representative of the bridge owner may be reached by telephone or otherwise.

* * * * *

(33 U.S.C. 499; 49 U.S.C. 1655(g)(2); 49 CFR 1.46(c)(5); 33 CFR 1.05-1(g)(3))

Dated: April 12, 1984.

H. W. Parker,

*Rear Admiral, Coast Guard, Commander, 13th Coast Guard District.*

[FR Doc. 84-11276 Filed 4-25-84; 8:45 am]

BILLING CODE 4910-14-M

---

## 33 CFR Part 165

**[CGD 84-029]**

## Safety and Security Zones

**AGENCY:** Coast Guard, DOT.

**ACTION:** Notice of temporary rules issued.

**SUMMARY:** This document gives notice of temporary safety zones, security zones and special local regulations. Periodically the Coast Guard must issue safety zones, security zones and special local regulations for limited periods of time in limited areas. Safety zones are established around areas where there has been a marine casualty or when a vessel carrying a particularly hazardous cargo is transiting a restricted or congested area. Security zones are temporarily established in response to a risk to national security present in a particular area. Special local regulations are issued to assure the safety of participants and spectators of regattas and other marine events.

**DATES:** The following list includes safety zones, security zones and special local regulations that were established between December 10, 1983 and March 31, 1984 and have since been terminated. Also included are several zones established earlier but inadvertently omitted from the last published list.

**ADDRESS:** The complete text of any temporary regulations may be examined at, and is available on request from, Executive Secretary, Marine Safety Council (G-CMC), U.S. Coast Guard Headquarters, 2100 Second St. SW., Washington, D.C. 20593.

**FOR FURTHER INFORMATION CONTACT:** Mr. Bruce Novak, Deputy Executive Secretary, Marine Safety Council at (202) 426-1477.

**SUPPLEMENTARY INFORMATION:** The local Captain of the Port must be immediately responsive to the safety needs of the waters within his jurisdiction; therefore, he has been delegated the authority to issue these regulations. Since Marine events and emergencies usually take place without advance notice or warning, timely publication of notice in the Federal Register is often precluded. However, the affected public is informed through Local Notices to Mariners, press releases, and other means. Moreover, actual notification is frequently provided by Coast Guard patrol vessels enforcing the restrictions imposed in the zone to keep the public informed of the regulatory activity. Because mariners are notified by Coast Guard officials on scene prior to enforcement action, Federal Register notice is not required to place the special local regulations, security zone or safety zone in effect. However, the Coast Guard, by law, must publish in the Federal Register notice of substantive rules adopted. To discharge this legal obligation without imposing undue expense on the public, the Coast Guard publishes a periodic list of these temporary special local regulations, security zones and safety zones. Permanent safety zones are not included in this list. Permanent zones are published in their entirety in the Federal Register just as any other rulemaking. Temporary zones are also published in their entirety if sufficient time is available to do so before they are placed in effect or terminated.

Non-major safety zones, special local regulations and security zones have been exempted from review under E.O. 12291 because of their emergency nature and temporary effectiveness.

The following regulations were placed in effect temporarily during the period 10 December 1983 through 31 March 1984 unless otherwise indicated:

| Docket No. | Location | Type | Date |
|---|---|---|---|
| 1. COTP Boston, MA, Reg. 06-83 | Boston Harbor, Boston, MA | Safety Zone | Dec. 31, 1983. |
| 2. COTP Boston, MA Reg. 84-01 | Boston Harbor, Boston, MA | Security Zone | Jan. 4, 1984. |
| 3. COTP Huntington, WV, Reg. 83-01 | Ohio River, Huntington, WV | Safety Zone | Dec. 6, 1983. |
| 4. COTP Huntington, WV, Reg. 84-01 | Kanawha River, Charleston, WV | do | Mar. 5, 1984. |
| 5. COTP Louisville, KY, Reg. 84-01 | Ohio River, Louisville, KY | do | Mar. 15, 1984. |
| 6. COTP St. Louis, MO, Reg. 84-02 | Upper Mississippi River | do | Mar 4, 1984. |
| 7. CGD03-83-68 | New York, New Jersey, Sandy Hook Channel, Raritan Bay, Arthur Kill | do | Dec. 13, 1983. |
| 8. CGD03-83-70 | New York, Lower Hudson River | do | Dec. 16, 1983. |
| 9. CGD03-83-71 | New York, New Jersey, Sandy Hook Channel, Raritan Bay, Arthur Kill | do | Dec. 16, 1983. |
| 10. CGD03-84-02 | New York, New Jersey, Sandy Hook Channel, Raritan Bay, Arthur Kill | do | Jan. 11, 1984. |
| 11. CGD03-84-02 | New York, Upper New York Bay, Lower Hudson River, East River | Security Zone | Jan. 15, 1984. |
| 12. CGD03-84-03 | New York, New Jersey, Sandy Hook Channel, Raritan Bay, Arthur Kill | Safety Zone | Feb. 4, 1984. |
| 13. CGD03-84-05 | New York, New York Harbor, Lower Hudson River | Security Zone | Feb. 3, 1984. |
| 14. CGD03-84-07 | New York, Lower Hudson River | do | Mar. 6, 1984. |
| 15. CGD03-84-09 | New York, New Jersey, Sandy Hook Channel, Raritan Bay, Arthur Kill | Safety Zone | Mar. 6, 1984. |
| 16. CGD03-84-10 | New York, New Jersey, Sandy Hook Channel, Raritan Bay, Arthur Kill | do | Mar. 8, 1984. |
| 17. CGD03-84-11 | New York, New Jersey, Ambrose Channel, The Narrows, Anchorage Channel, Constable Hook Reach. | do | Mar. 20, 1984. |
| 18. CGD03-84-12 | New York, New Jersey, Constable Hook Reach, Anchorage Channel, The Narrows, Ambrose Channel. | do | Mar. 21, 1984. |
| 19. COTP Hampton Rds, VA Reg. 84-01 | Mailboat Harbor and Tangier North Channel | do | Jan. 5, 1984. |
| 20. COTP Hampton Rds, VA Reg. 84-02 | Back River, Hampton, VA | do | Jan. 8, 1984. |
| 21. COTP Hampton Rds, VA Reg. 84-03 | Back River, Hampton, VA | do | Jan. 9, 1984. |
| 22. COTP Hampton Rds, VA Reg. 84-04 | Chesapeake Bay, Hampton Rds, Elizabeth River, Southern Branch of the Elizabeth River. | do | Feb. 14, 1984. |
| 23. COTP Hampton Rds, VA Reg. 84-05 | Back River, Chesapeake Bay, VA | do | Mar. 21, 1984. |

| Docket No. | Location | Type | Date |
|---|---|---|---|
| 24. CGD5-184-01 | Elizabeth River Waterside Fireworks Display | Special Local Reg. | Mar. 3, 1984. |
| 25. CGD07-83-20 | Port of Palm Beach Turning Basin South of Peanut Island | do | Dec. 20, 1983. |
| 26. CGD07-83-23 | Fort Lauderdale, FL | do | Dec. 17, 1983. |
| 27. CGD07-83-24 | N. Fork of the St. Lucie River from Sandpiper Bay to Shepard Park | do | Dec. 17, 1983. |
| 28. CGD07-83-25 | Hillsboro River Light "69" (LLNR 4138) North to ICW mile marker 1050 | do | Dec. 16, 1983. |
| 29. CGD07-83-26 | Boca Raton, FL | do | Dec. 16, 1983. |
| 30. CGD97-83-27 | Key Biscayne, FL | do | Dec. 16, 1983. |
| 31. CGD07-83-27 | Boynton-Delray, FL | Special Local Reg. | Dec. 23, 1983. |
| 32. COTP Galveston, TX | Galveston, TX | Safety Zone | Dec. 5, 1983. |
| 33. COTP New Orleans, LA, Reg. 83-03 | Lake Pontchartrain, LA | do | Aug. 24, 1983. |
| 34. COTP New Orleans, LA, Reg. 83-06 | Miss. River 230.3 LMR-AHOP | do | Oct. 4, 1983. |
| 35. COTP New Orleans, LA, Reg. 83-07 | Miss. River 413.2 | do | Oct. 10, 1983. |
| 36. COTP New Orleans, LA, Reg. 83-08 | Miss. River Gulf Outlet Mile 64 | do | Sept. 22, 1983. |
| 37. COTP New Orleans, LA, Reg. 83-09 | Miss. River Mile 154.3 | do | Oct. 14, 1983. |
| 38. COTP New Orleans, LA Reg. 83-10 | Miss. River Mile 299 | do | Oct. 19, 1983. |
| 39. COTP New Orleans, LA Reg. 83-11 | Miss. River Mile 335 | do | Nov. 5, 1983. |
| 40. COTP New Orleans, LA Reg. 83-12 | Miss. River Mile 438 | do | Oct. 26, 1983. |
| 41. COTP New Orleans, LA, Reg. 83-13 | Miss. River Mile 115.5 | do | Nov. 15, 1983. |
| 42. COTP New Orleans, LA, Reg. 83-14 | Miss. River Mile | do | Nov. 16, 1983. |
| 43. COTP New Orleans, LA, Reg. 83-16 | Miss. River Mile 100.5 | Security Zone | Dec. 5, 1983. |
| 44. COTP New Orleans, LA, Reg. 83-17 | Miss. River Mile 6.6 | Safety Zone | Dec. 24, 1983. |
| 45. COTP New Orleans, LA Reg. 83-03 | Cutoff, LA | do | Jan. 27, 1984. |
| 46. COTP San Diego, CA, Reg. 84-01 | San Diego Bay, CA | do | Feb. 14, 1984. |
| 47. CGD11-84-03 | Outer Continental Shelf | do | Mar. 1, 1984. |
| 48. CCGD11-84-016 | Mission Bay, CA | Special Local Reg. | Mar. 10, 1984. |
| 49. COTP Portland, OR, Reg. 83-05 | Yaquina Bay, OR | Safety Zone | Nov. 20, 1983. |
| 50. COTP Portland, OR, Reg. 84-165 T1302 | Columbia & Willamette River St. Helens to Portland, OR | do | Mar. 26, 1984. |

Dated: April 23, 1984.

C. M. Holland,

*Captain, USCG, Executive Secretary, Marine Safety Council.*

[FR Doc. 84-11273 Filed 4-25-84; 8:45 am]

BILLING CODE 4910-14-M

## FEDERAL COMMUNICATIONS COMMISSION

### 47 CFR Part 73

**[BC Docket No. 82-538; RM-3983; Docket No. 18421; FCC 84-157]**

### Hours of Operation of Daytime-Only AM Broadcast Stations; Amendment Concerning Hours of Operation of Dominant and Secondary Stations

**AGENCY:** Federal Communications Commission.

**ACTION:** Final rule.

**SUMMARY:** This action amends § 73.99 of the Commission's Rules relating to extended hours of operation for AM stations. It enlarges the power which can be used by Class III daytime-only stations during post-sunset operation thereby enlarging the area and population they can serve during this period. In addition, it concludes the proceeding by referring the remaining issues for disposition elsewhere where they more appropriately can be considered.

This action also deletes § 73.1725(d) of the FCC Rules and terminates rule making in Docket No. 18421 relating to the settlement of disputes concerning the nighttime resumption of operation by limited-time stations during hours when co-channel Class I stations were not operating. Because this matter has become moot, further consideration of it would serve no useful purpose.

**EFFECTIVE DATE:** May 21, 1984.

**ADDRESS:** Federal Communications Commission, Washington, D.C. 20554.

**FOR FURTHER INFORMATION CONTACT:** Wilson La Follette, Mass Media Bureau, (202) 632-5414 or Jonathan David, Mass Media Bureau, (202) 632-7792.

### List of Subjects in 47 CFR Part 73

Radio broadcast.

### Memorandum Opinion and Order

In the Matter of: Hours of Operation of Daytime-only AM Broadcast Stations, Amendment of § 73.81 of the Commission's Rules (Hours of Operation of Dominant and Secondary Stations); BC Docket No. 82-538, RM-3983 and Docket No. 18421.[1]

Adopted: April 11, 1984.

Released: April 13, 1984.

By the Commission.

*Introduction*

1. The Commission has before it a Petition for Reconsideration of the *First Report and Order* in this proceeding —— FCC 2d —— (1983), 48 FR 42944, published September 20, 1983, which was filed by the Daytime Broadcasters Association ("DBA") and responsive pleadings.[2] In addition, the Commission intends to reconsider certain other matters in this proceeding on its own motion. They are discussed below.

2. This proceeding was begun with a combined *Notice of Proposed Rule Making* and *Notice of Inquiry*.[3] As a whole, the proceeding focused on possible rule and policy changes which could help to alleviate some of the difficulties affecting daytime-only AM broadcasters because they are licensed only for operation from local sunrise to local sunset.[4] The rule making portion dealt with specific rule changes to permit for the first time operation beyond local sunset and to extend the opportunity for pre-sunrise operation by certain Class II stations. Both of these matters were resolved by the *Report and Order*.

3. In the *Report and Order* the Commission decided that it was possible to permit post-sunset

[1] We have included the matters outstanding in Docket No. 18421 for disposition in this document. These matters are discussed below.

[2] Letters of support for the petition for reconsideration were filed by several daytime-only stations. Oppositions to the petition were filed by the Association for Broadcast Engineering Standards ("ABES"), the American Broadcasting Companies ("ABC"), Clear Channel Broadcasting Service ("CCBS"), Cox Communications ("COX"), Bonneville International, licensee of Station KSL, Salt Lake City, Utah, ("KSL"), and Multimedia Radio ("Multimedia").

[3] 47 FR 38937, Published September 3, 1982.

[4] This limitation arises from the fact that at night the ionosphere reflects AM signals back to Earth hundreds or even thousands of miles away, thereby causing a much greater potential for interference. This means that many stations that are able to operate during the day without causing interference would cause considerable interference if they were to continue that operation at night. However, because the shift from day to night conditions occurs gradually during a transitional period, it is possible to permit some operation during this period without causing interference. Further explanation of AM propagation and related matters is contained in the *Report and Order* (see paras. 2-12).

operation.[5] This conclusion was based on the fact that during the transitional period, the potential for interference was notably less than during full nighttime conditions. Taking this into account it was possible to measure the potential for interference and, in most cases, to allow post-sunset operation without causing interference. In fact, that is what the Commission did. Class III stations were permitted to operate two hours beyond local sunset with up to 500 watts power, reduced as necessary to avoid interference. Most Class II stations (those on clear channels) also got post-sunset authority on a non-interference basis. The specific powers varied during the two-hour post-sunset period depending on protection requirements, and in some cases, post-sunset operation was curtailed or for a few was not possible at all.

4. The *Notice of Inquiry* proposed to explore a range of other ways of helping daytime-only stations obtain nighttime operation either on their own or another AM channel or on an FM channel. In the *First Report and Order* the Commission decided to defer these issues for subsequent consideration. These matters are discussed in a subsequent section of this document.

*Petition for Reconsideration*

5. The DBA petition for reconsideration commended the Commission for its action, but it said that some additional steps should be taken to alleviate the difficulties faced by the daytime-only stations. Specifically, it urged the Commission to amend the manner in which diurnal curves will be used to calculate protection requirements imposed on Class II daytime-only stations during the two hour post-sunset period to take into account the effect of the diurnal variation on the protected contour of a Class I station on the frequency. DBA argued that such diurnal calculations are possible to make and are not unduly complex or impracticable as the Commission stated. According to DBA, this is an important matter as it objects to protecting the Class I station's 0.5 mV/m 50% signal in the period before a signal of this intensity is generated.

6. For Class III daytime-only stations DBA argued that the Commission's "worst-case" approach to determine the power to use during the entire post-sunset period is too limiting. Instead, it urged periodic recalculations or averaging the time rather than using "worst-case" which it believes over protects the full-time stations during part of the post sunset period. Finally, DBA objects to the Commission's decision not to entertain waiver requests from Class III daytime-only stations seeking a power of 500 watts based on a showing that a station has operated with this power for years during the pre-sunrise period without causing undue interference to full-time stations. DBA asserts that it is unfair to refuse to consider such requests when the Commission did agree to consider interference objections filed by full-time stations.

7. DBA notes the Commission's concern that persons in remote areas of the United States do not have adequate radio service, but it says this concern should be allayed by the fact that commercial shortwave radio is increasingly available in the United States. DBA contends that shortwave is equally well suited to the type of extended area service the Commission is trying to achieve with AM radio skywave service, and more commercial radio receivers now include one or more short wave bands at no extra cost.[6]

8. The Association for Broadcast Engineering Standards ("ABES") filing was typical of the oppositions in asserting that the Commission responded as generously as possible to the pleas of daytime-only AM stations for some measure of operating authority in the post-sunset period. ABES and the others insisted that additional relief would be unwarranted. On the issue of the use of the diurnal curves in determining the location of the protected 0.5 mV/m, 50% skywave contours of Class I stations, ABES notes that the Commission considered the merits of DBA's proposal but rejected it because of valid concern about the administrative burden involved and the need for consistency with our international agreements regarding Class I services. According to ABES, DBA makes no factual showing why the Commission should now reverse its conclusions in that matter.

9. ABES also disputes the appropriateness of employing a system of varying operating powers for daytime stations during the course of the post-sunset period, asserting that once again DBA is presenting a matter which had been rejected earlier because it would increase the technical and operational complexity of post-sunset service and would increase the potential for destructive interference to full-time services. Here, too, ABES insists that DBA has failed to provide any new facts or technical showings to alter the Commission's resolution of this issue.

10. Finally, the opponents assert that the Commission should not adopt a policy of granting waivers to permit post-sunset operations in excess of that permissible under the general rule in the absence of any studies upon which the Commission could possibly justify a different result in the public interest. According to ABES, the burden of presenting facts which show that reconsideration of any element of the *First Report and Order* is necessary or desirable rests upon DBA. ABES submits that DBA has failed to sustain that burden.

11. Several other points were added by CCBS. In particular, it disputed the relevancy of short wave. It noted that few Americans are capable of receiving such signals which, in any event, under current Commission rules can only be used to provide international rather than domestic service. In addition, CCBS believes it was proper to distinguish between objections raised by full-time stations regarding new interference within their coverage areas and requests for higher power by daytime-only stations. In the first case, it says that actual loss of service to current listeners would be involved, rather than a limitation on the ability to extend service to listeners not now relying on the service.

*Supplement to Petition for Reconsideration*

12. After the cycle of pleadings on the original petition concluded, DBA sought and received leave to file a supplement to its petition for reconsideration. In granting DBA's motion, the Commission provided an opportunity for other parties to respond to the supplement, and opposition filings were received from ABES, Multimedia, Cox and CCBS. In its supplement DBA changed the approach expressed in the original petition and thereby substantially broadened its request for relief. Instead of adjustments in the powers available during the post-sunset period, DBA requested that all Class III daytime-only stations be able to operate until 6:30 p.m. local time with 500 watts power and that Class II daytime-only stations be given substantially increased power. Class II stations on U.S. Class I-A clear channels would be given a minimum power of 100 watts, and those on U.S. I-B's would be given a minimum power of 250 watts. Class II stations on foreign clear channels would be given the maximum power permitted by treaty, but the Commission was asked to press

[5] Reconsideration, however, has not been sought regarding the Commission decision to enlarge the opportunity for pre-sunrise operation by certain Class II stations, and no further consideration will be given to this matter.

[6] Finally, DBA noted that the Commission did not address in its *First Report and Order* the various proposals raised in the *Notice of Inquiry*. DBA urged the Commission to act expeditiously on a number of these proposals. Support on this point came from opposition filings as well and, as noted earlier, the Commission on its own motion has decided to act on these matters here.

Canada and Mexico to allow even greater power.

13. In support of these requests DBA asserts that many stations are severely limited in the facilities allowed during the post-sunset period. To them this stems from an excessive level of protection to the service of clear channel stations and to the refusal to allow Class III stations to use the same power (500 watts) in the post-sunset period as they are able to use pre-sunrise. In DBA's view, propagation conditions during the pre-sunrise and post-sunset transitional periods are similar so that there is no basis for not giving the stations the same power post-sunset as they have pre-sunrise. DBA asserts this is just one example of how the Commission has given undue weight to technical data, thereby unnecessarily restricting post-sunset service.

14. The oppositions and the engineering showings in support of them make the same basic point: That the supplement provides no new evidence or even any supportive engineering data on which to base any modification of the Commission's decision. Moreover, they assert that DBA has ignored specific findings of the Commission and without support has reasserted claims previously rejected by the Commission. According to Multimedia, for example, DBA is attempting to discredit the Commission's reliance on technical data by asserting that such data was given undue emphasis. Multimedia insists that the engineering impact of post-sunset operations cannot be ignored but must be at the heart of the Commission's decision making process. Multimedia also rejects the DBA's reference to pre-sunrise operations by daytime-only stations as providing a basis for allowing similar operation in the post-sunset period. According to Multimedia, the key issue is the fact that new interference would be caused, not whether specific complaints would be made regarding that interference. Even in the terms in which DBA puts it, Multimedia notes that listeners indeed have objected to the loss of service during the pre-sunrise period. Moreover, Multimedia insists that the absence of complaint provides no basis for action since it indicates no more than that listeners have become resigned to the loss of service, not that such losses have not taken place.

15. Also, in regard to post-sunset operation by Class II stations, the various opposition engineering statements contradict the DBA assertion that the Commission did not consider the matters of the "distortion zone" or the diurnal variations in the development of the 0.5 mV/m 50% contour of the Class I station. The opponents contend that the Commission considered these points and reached sound conclusions which DBA has failed to rebut. Finally, ABES insists that DBA is incorrect in attempting to depict the basic issues as a choice between distant versus local service. Rather, the effect of the relief sought in DBA's Petition for Partial Reconsideration would be the loss of substantial local groundwave services of fulltime Class III stations. According to ABES, throughout this rule making, DBA has consistently failed to support its various positions and assertions with any technical or other studies to demonstrate the claimed benefits to result from the adoption of its proposals. As opposed to the massive record in this proceeding which documents the damage to occur from the operation of daytime-only stations under nighttime propagation conditions, ABES asserts that DBA's unsubstantiated claims to the contrary cannot be accepted.

*Discussion*

16. In examining the DBA petition as supplemented, several points become clear. First, because of limitations on their hours of operation, daytime-only stations do indeed face serious difficulties in being able to provide effective service to their communities. Obviously, they are strongly interested in being able to operate with the maximum possible power during the post-sunset period. However, as noted by the opponents, no new engineering or other showing was provided to establish that the specific changes sought by DBA would not cause interference or that the interference losses would be acceptable in light of the new service to be provided. Ordinarily, this would lead to procedural denial of the petition, but we believe it is important to give consideration to the larger issue of the need for additional power for post-sunset operation and the effect such operation would have. Therefore, as was the case with the original decision, the Commission has conducted its own studies and computer calculations to determine whether further relief is appropriate and if so what form it should take. Because of the difference between the situations affecting Class II and Class III stations they are discussed separately.

17. *Class III daytime-only stations.* The *Notice* proposed to allow these stations to operate until 6:00 p.m. local time with a power of 500 watts, the same power as they were able to use pre-sunrise. However, in the *First Report and Order*, the Commission concluded that the record failed to establish that this was appropriate in light of the serious destructive interference which unrestricted 500 watt operation would produce. Therefore, the Commission decided it was necessary to reduce power below the 500 watt level where necessary to avoid causing groundwave interference.[7] To do this, the Commission did the calculations on a "worst case" basis at the end of the two-hour post-sunset period (SS+2). Although for many stations this meant that the power was reduced from the original proposal, for all Class III daytime-only stations, the period of post-sunset operation was extended. Instead of ending at 6:00 p.m., post-sunset operation was authorized to continue until two hours after local sunset.[8]

18. Based on a "worst-case" analysis it was necessary to reduce the power for many stations well below the 500 watt level. In fact, a substantial number were reduced below 100 watts. Even though most were able to provide reasonable service even with reduced power, there is no question that the coverage area inevitably was reduced from that available for the same stations during pre-sunrise operation when most Class III stations were able to use 500 watts. That difference has been the cause of much concern and misunderstanding.

19. Many daytime-only stations seem to believe that the Commission based the difference in allowable pre-sunrise and post-sunset powers on a belief that propagation conditions during these two periods differed. Since they thought the two periods to be alike in this regard, they thought there should not be a difference in the authorized powers. Although there are certain propagation differences between the two periods, the distinction in authorized power rested on a quite separate basis. Pre-sunrise power of 500 watts was permitted in 1967, even though the Commission recognized that this could cause serious interference losses. Nonetheless, the Commission was persuaded that extraordinary circumstances warranted accepting such interference. Specifically, the record in Docket No. 14419 contained extensive showings of the need to provide vital weather and school closing information during the pre-sunrise period. This need was shown to be particularly acute during

[7] Class III stations were only required to provide groundwave protection as Class III full-time stations do not provide skywave service.

[8] Implementation of the full period of post-sunset operation awaits completion of negotiations with Mexico. In the meantime, post-sunset operation cannot extend beyond 6:00 p.m. local time.

the winter months when the day is shortest. Waiting until sunrise was not a satisfactory alternative if this information were to be disseminated in time. It was because of these emergency-like circumstances that the Commission concluded that pre-sunrise interference losses were justified.

20. The post-sunset situation is quite different. In contrast to the record developed regarding the need for 500 watts pre-sunrise, the record in this proceeding is essentially devoid of justification for the creation of the extensive interference that would result from an across-the-board use of 500 watts power for post-sunset operations. In part, this difference is due to the fact that the pre-sunrise and post-sunset periods differ in one crucial respect. In the former, the daytime-only station has been off the air all night and thus had no opportunity at all to disseminate the type of vital information noted in paragraph 19, *supra*. Being able to begin at 6:00 a.m. with 500 watts enables the station to perform this service. It is quite different during the post-sunset period because the station has been on the air all day with full power. As a consequence, it has had an ample opportunity to share any needed information with its listeners. Thus, while operation during the post-sunset period is clearly justified when no interference results, there is no apparent or record evidence on which the Commission could conclude that substantial post-sunset interference losses should simply be ignored as asserted by DBA.[9]

21. Nonetheless, while the interference consequences need to be taken into account, it does not follow that the exact balance struck in the *First Report and Order* must be followed. Because this is an important public interest matter involving the provision of as much service as feasible by daytime-only stations to their communities, we have given it a fresh look. Based on our reexamination, we have concluded that it is possible to allow additional power while at the same time taking the impact of interference into proper account.

22. On review we have examined whether use of the "worst-case" approach throughout the two-hour period based on the potential for interference which is reached only during the final moment of that two-hour period is too restrictive in its power limitation effects. While this approach does avoid interference, it also means that power is reduced more than necessary for the full transition period. One alternative we explored involved the approach suggested in the original DBA petition for reconsideration. Under it we would divide the period involved into two one-hour segments with calculations for each based on the "worst case" at the end of each period. This would leave the second hour unchanged, but it would offer some relief during the first hour, again without causing any interference. However, we will not adopt this method because it offers little help to the stations most needing to increase power.

23. Next we considered an alternative involving making the calculation of the power to be permitted using the mid-time of each hour rather than the end of the period in question. Applying this to the first hour of post-sunset operation, the calculation would be made at 30 minutes after sunset (SS + 0.5). Using such an approach results in a relative balance between the excess protection which is provided in the first half of the period and the partial protection which is provided during the second half. At the same time, it permits substantially greater power than would be possible using any type of "worst-case" method. Using this method, many more stations would reach a full 500 watts or the same maximum power they use daytime.[10] Many others will obtain substantial powers of 200, 300 or even 400 watts. While using mid-time calculations does permit some interference to occur, it still takes such interference into account and places a reasonable limit on how much can occur. Overall, we believe that using a mid-time calculation balances matters fairly between the needs of these daytime-only stations for additional power while avoiding excessive interference to the service of full-time stations. The rules adopted in the *Report and Order* will thus be modified accordingly.

24. Although most stations will obtain substantial powers as a result of this change, some of them would still be below 100-watts. It is this group that faces the greatest difficulty in providing effective post-sunset service. To deal with this problem, we believe it is appropriate to provide a 100 watt minimum power for use during this post-sunset period by all Class III daytime-only stations, except when doing so would cause interference to a foreign station. Although this would create some additional interference, the amount would be modest because many of these stations already would be near this 100 watt level under our revised approach. Even for those few cases where the interference effect would be greater, this occurs because the station otherwise would have to operate with a highly restricted power. Thus, these are the very stations most in need of the additional power made possible by the 100 watt minimum.

25. The next point to consider is the period during which these enhanced powers would be available. We believe that Class III daytime-only stations should be able to use the power calculated for this first hour until 6:00 p.m., even if that extends beyond one hour. While it is true that some additional interference would occur, we do not believe that it would create unacceptable losses under the circumstances. First of all, this approach is self-limiting. Because this operation would be limited to 6:00 p.m., this means that it would be used only during a few months of the year. Even during those months when it does apply, the increment could well be as little as 15 or 30 minutes. The largest effect would be felt in December when the days are shortest, but even then, the impact would really be significant only in the northern tier of states. However, it is in these localities that the need is greatest and the restrictions on operation by daytime-only stations are the most severe.

26. Being able to operate more effectively during this period has an additional benefit for daytime-only stations. They will be able to generate substantially improved revenues in the Christmas selling season and thereby become a more effective competitor in the market. These benefits accrue to the public as well because the station's ability to serve its audience would be improved. For all these reasons we believe that this modest extension of the first-hour operations is warranted. Because it is keyed to the needs of the station and its audience when the days are shortest, it is appropriate to key the calculations involved to the interference situation in December. While separate calculations could be made for each month, this would be needlessly complicated and would also be inconsistent with our desire to generally limit "worst-case" interference to December. Likewise, we could base the calculation on the "worst-case" month, but this makes no sense if the month involved is unaffected by this type of operation. Thus, use of December calculations seems most appropriate.

[9] Not only do the losses typically exceed the gains by a factor of 10 to 12, these losses usually occur close to the full-time station's own community of license where its own listeners are concentrated.

[10] Some stations are licensed for 250 watts operation and thus cannot be expected to get more power in the post-sunset period than they are licensed to use daytime.

27. On the other hand, the period after 6:00 p.m. is quite different. Although it is technically possible to use a mid-time calculation for the second hour as well, there is no showing of public benefit to justify the significant interference it would create. None of the compelling reasons for an adjustment in the pre-6:00 p.m. period apply here. Moreover, the effect of such operation would occur throughout the year and could affect reception until 10:30 p.m. or even later. Although we believed that it was sensible to allow operation beyond 6:00 p.m., the premise for allowing the additional period of operation until two hours after sunset was that it was possible to do so without causing interference. With this in mind we negotiated an agreement with Canada that contains a provision allowing operation to extend for two hours beyond local sunset. Efforts continue to reach a similar agreement with Mexico. While we remain committed to this goal, there is no basis for special treatment in the period after 6:00 p.m.[11]

28. Since there is no support in the record for any change in the power which should be available after 6:00 p.m., and any increase would result in new interference, we shall leave those powers generally unchanged from the values shown on the notifications already sent to these stations. However, new authorizations will be sent that will reflect the other changes we are making herein. In the meantime, the current notification can be relied on to describe the power available after 6:00 p.m. when such operation becomes possible after Mexican agreement has been obtained. Calculations will be made and new notifications will be sent so that stations can prepare to employ the greater power we are authorizing when sunset again occurs before 6:00 p.m. this fall. The new authorizations will contain both powers: the first which can be used until 6:00 p.m. local time and the second (which is calculated on the same technical basis as that now authorized) which can be used after 6:00 p.m. Section 73.99 will be amended to reflect these changes.

29. *Class II Stations.* DBA has objected to the degree to which the Commission found it necessary to restrict the operating powers of Class II daytime-only stations during the post-sunset period. DBA argued that these stations should be permitted to operate during the post-sunset period with the same power levels as those permitted during the pre-sunrise period. Here again the foundation of DBA's argument is its claim that propagation conditions during the two periods are essentially the same. From this DBA concludes that the interference during PSSA operation would be no worse than during PSRA operation.

30. We do not agree with this argument because it fails to take into account the fact that the east-west time relationship between daytime-only stations and co-channel Class I stations is reversed from morning to afternoon. This reversal results in the need for substantially different protection requirements during the two periods. Because of such differences some stations that have never qualified for PSRA operation are able to qualify for PSSA operation. Likewise, some that operate pre-sunrise with substantial power may have reduced power post-sunset or even none at all.

31. DBA repeats its argument that was made in earlier comments in this proceeding that protection to the protected skywave contour of Class I stations should be limited to the contour that is calculated using diurnal factors at various times of the transitional period. This is an issue that was discussed in detail in the *First Report and Order* in paragraphs 37 through 40 where the Commission expressed its concern regarding the cumulative effects of large numbers of daytime-only stations that could result in excessive interference to the skywave service of Class I stations. Some commenting parties had recommended use of the RSS principle in dealing with such cumulative effects. The Commission chose instead to compensate for these effects by adopting rules that assumed that the 0.5 mV/m skywave contour of Class I stations are fully developed at sunset at the Class I station's site. This provides a margin of safety which the Commission believed to be adequate. Several commenters to the Petition for Reconsideration have expressed their views that this approach was a practical and balanced treatment of this issue. On the other hand, DBA has offered no factual showing and we perceive no overriding public interest benefit that would convince the Commission to alter its decision on this issue.

32. Similarly, DBA raises the issue of skywave phase distortion which results in the so-called "distortion zone" and asserts that the Commission has never officially taken it into consideration in the determination of any issues pertaining to Clear Channel station service. DBA seems to overlook the fact, however, that this is an issue that the Commission discussed in considerable detail in its *First Report and Order* in paragraphs 44 through 47. Upon review of the Report it will be noted that the existence of the distortion zone was in fact used as partial justification for the adoption of rules that permitted greater interference at the 0.1 mV/m groundwave contour of Class I stations than would normally be permitted. The rules adopted permitted interfering signals at the 0.1 mV/m groundwave contour of Class I stations to be as high as 25 uV/m, whereas, normally only 5 uV/m is permitted. Here again, DBA failed to submit any technical showing whatever to demonstrate that the Commission's decision on this issue was improper.

33. DBA also argued that Class I-B stations contribute interference to each other during the transitional periods because of their time differences and resulting different modes of operation (i.e., because of time differences one Class I-B station may still be using its daytime antenna system when it is already nighttime at the other Class I-B station). To exemplify this argument, reference is made to the operations of stations WWVA (Wheeling, West Virginia) and KVOO (Tulsa, Oklahoma), both Class I-B stations on 1170 kHz. DBA asserts that when it is one hour before sunrise in Tulsa, FCC skywave curves indicate that the Wheeling station is putting a powerful interfering skywave signal into the Tulsa station's coverage area. It is thus claimed that the interference caused by these stations to one another would be worsened only very slightly, if at all, if daytime-only stations (operating on the Class I-B channels) were permitted to operate with 250 watts until 6:30 PM local time. However, DBA failed to submit any technical showings which would support such an assertion. On the other hand, Clear Channel Broadcasting Service ("CCBS") submitted interference studies that showed that Class II-D stations operating with 250 watts would cause serious loss to Class I stations of both skywave as well as groundwave services. Using the example of WWVA and KVOO chosen by DBA, it was shown that daytime-only station, KJAS, Jackson, Missouri, operating with 250 watts would cause KVOO to lose 29.2% and 40.9% of its skywave and nighttime groundwave service, respectively. WWVA would lose 35.8% and 30.5% of its skywave and nighttime groundwave service respectively. Furthermore, there is no reason to believe that such a

[11] Although the most recent proposal of DBA suggests use of a 6:30 p.m. dividing line, an extension to 6:30 p.m. was not proposed in the *Notice*, nor was it the subject of comment by the parties. Therefore, we believe it is inappropriate to consider such an extension on reconsideration for the first time. See 47 CFR 1.429.

condition would be an isolated instance. Similarly, DBA proposed that daytimers on the Class I–A Clear Channels would be permitted to operate with a minimum power of 100 watts. Here also, however, CCBS demonstrated with interference studies that such operation would result in substantial interference to both skywave as well as nighttime groundwave service of Class I–A station.

34. Because of the above circumstances it is not possible to provide relief for daytime-only Class II stations along the lines that have been urged. Further, we cannot sanction increased power without causing devastating interference losses both to groundwave and skywave services as illustrated in a map attached as an appendix. It shows the effect of a 50 watt proposed operation in North Carolina on a Chicago station. Particularly noteworthy is the extensive loss of groundwave coverage in the Chicago area itself.

35. Although across-the-board relief for Class II stations is not possible, we can provide relief for a significant group of stations. For the daytime-only stations of foreign clear channels, we can increase their power by doing the calculations at the end of each hour during the two hour post-sunset period. When Phase 1 for a daytime-only station on a domestic Class I clear channel greatly exceeds one hour, we will similarly perform the calculation when it is seen to be advantageous to the daytime-only station. In both instances, it should be emphasized that these are "worst-case" calculations for the period in question.

*The Notice of Inquiry*

36. We address here the separate proposals that we made the subject of inquiry in the belief that further comment and consideration were needed before they would be ripe for decision as to whether rule making should be instituted on them.

37. *Allocations Restrictions in § 73.37(e)(2) of the Rules.* We invited comments on the desirability of amending § 73.37(e)(2) of the Rules so as to permit the licensees of daytime-only stations to apply for unlimited-time stations on the Class I–B Clear Channels and on the 41 Regional Channels without having to make the showings generally required by that subsection, e.g., the provision of a first primary service or a first or second local service. On further reflection, we believe it more appropriate to consider that mode of possible relief to daytime-only stations together with other pending proposals for the amendment of the same rule. For example, the National Radio Broadcasters Association referred to RM 3683, its pending petition that the threshold requirements of that rule be discontinued altogether. Accordingly, we shall take the comments filed in BC Docket No. 82–538 into account in considering the broader proposal that we do away with § 73.37(e) altogether.

38. *Preference for Daytime-only Stations Seeking FM Assignments.* We have decided to deal with this issue in our consideration, in MM Docket No. 84–231, of proposed rule changes affecting the assignment of FM channels. Persons wishing to comment further on it may do so in response to an outstanding *Notice of Proposed Rule Making* in that docket.

39. *Preference for Daytime-only Stations Seeking Unlimited-Time AM Assignments.* Most of the considerations affecting this question also arise under the preceding questions of possible preferences to daytime-only stations seeking FM assignments. The two should be decided consistently. We therefore think it desirable to defer deciding upon the AM aspect of this question until we reach our decision in MM Docket No. 84–231, in which rule making on the FM aspect of the question is now pending.

40. *Expedition of Petitions to Assign FM Channels.* We agree with the comments of parties who felt that the timing involved in the rulemaking process involving the assignment of FM channels is not sufficiently directly related to the need of daytime-only stations to warrant changing the processing of petitions to assign or reassign FM channels in this manner. We accordingly will not pursue this possibility further.

41. *Low Power FM.* We have had under consideration other proposals to establish a low power FM service, including the petition of the Moody Bible Institute, RM–3914. In a separate action today the Commission has decided not to pursue this matter. In light of that decision regarding the generic question of permitting low power FM, we do not believe that it is appropriate to pursue low power FM in the presently limited context.

42. *Low Power AM Operation during Nighttime Hours.* This proposal, to permit daytime-only stations to operate during nighttime hours at powers not exceeding 500 watts that would protect other stations, was supported by the Daytime Broadcasters Association, individual daytime broadcasters, and NTIA, while others qualified their support with admonitions that more study is needed, and some comments flatly opposed this step. Concerns as to the need for care to assure adequate protection to unlimited-time stations were expressed by several parties including the National Radio Broadcasters Association. Others, including the National Association of Broadcasters, believed it to be improbable that protection requirements would permit daytime-only stations adequate power to render useful service if permitted nighttime operations beyond permitted pre-sunrise and post-sunset operation. We find merit in the suggestion of NAB that we can better direct our energies at this stage to other means of affording relief that promise greater benefits with fewer potential drawbacks. In these circumstances, we believe it desirable to defer further action on the AM low power until its potential advantages and disadvantages and the need for it can be reviewed further in the light of experience with the improvements that may be realized from the other measures that have been adopted in the rules.

43. *Use of Local Channels.* We have not found in the comments persuasive reasons for initiating rule making at this time on the proposal that daytime-only broadcasters be permitted to switch to local channels at night. The six local channels are already crowded, with as many as 170 unlimited time stations already operating on individual local channels. The record refers to the dual disadvantage of creating still greater crowding on these channels, while not being able to provide sufficiently meaningful scope for nighttime operations by daytime-only broadcasters on the local channels. We, accordingly, are not persuaded that it would be desirable to conduct rule making on this proposal.

*Other Matters*

44. *Docket No. 18421 Issues.* We have also considered the separate matter of our proposal, in Docket No. 18421, to amend § 73.81 of our Rules (an old AM rule since redesignated as § 73.1725(d)), that prescribes procedures to be followed when limited-time stations and co-channel Class I (clear channel) stations disagree as to a definite time when the limited station may resume broadcasting during nighttime hours when the Class I station is not operating. The proposal, which was announced in a *Notice of Proposed Rule Making* adopted January 15, 1969, 34 FR 1059, addresses circumstances which no longer exist. We are aware of no instance in which a Class I station that is co-channel with any of the 16 limited-time stations is silent during nighttime hours when a limited-time station would

have interest in resuming operations. We ceased licensing new limited stations in 1959. The circumstances underlying the rule being non-existent, we revoke § 73.1725(d) and terminate Docket No. 18421. In the very unlikely event that further changes in broadcast practices give rise to questions concerning operations by any of the 16 pre-1959 limited-time stations during nighttime hours when a co-channel Class I station is not operating, we would deal with the matter *ad hoc*, without going through the procedures of § 73.1725(d), which are obsolete both as prescribed in the rule, and as we proposed, in 1969, to amend it.

45. Accordingly, the Rules will be amended as indicated in the previous discussion, and both proceedings will be terminated.

46. Authority for this action is contained in Sections 303 and 307(b) of the Communications Act of 1934, as amended.

47. It is ordered, That, the Petition for Reconsideration filed by the Daytime Broadcasting Association is granted to the extent indicated and in all other respects is denied.

48. It is further ordered, That, § 73.99 of the Commission's Rules is amended as set forth in the attached Appendix, effective May 21, 1984.

49. It is further ordered, That, the proceeding in BC Docket No. 82-538 is terminated.

50. It is further ordered, That, § 73.1725(d) of the Rules is deleted.

51. It is further ordered, That, the proceeding in Docket No. 18421 is terminated.

(Secs. 4, 303, 48 Stat., as amended, 1066, 1082; 47 U.S.C. 154, 303)

Federal Communications Commission.

William J. Tricarico,

*Secretary.*

Appendix

## PART 73—[AMENDED]

1. 47 CFR 73.99 is amended by revising paragraph (e)(4) and by adding a new paragraph (e)(5) to read as follows:

**§ 73.99 Pre-sunrise service authorization (PSRA) and Post-Sunset service authorization (PSSA).**

* * * * *

(e) * * *

* * * * *

(4) Class III stations operating PSRA and PSSA are required to provide full protection to co-channel foreign Class II stations.

(5) Class III daytime-only stations operating PSSA beyond 6:00 p.m. local time are required to fully protect domestic full-time Class III stations. The protection that Class III daytime-only stations will be required to provide when operating PSSA until 6:00 p.m. local time will be that which is calculated when it is sunset plus 30 minutes at the site of the Class III daytime-only station. However, a minimum power of 100 watts shall be permitted. For purposes of determining protection, the existing nighttime RSS limit will be used in the determination of maximum power permissible.

* * * * *

**§ 73.1725 [Amended]**

2. 47 CFR 73.1725 is amended by removing paragraph (d) in its entirety.

[FR Doc. 84-10902 Filed 4-25-84; 8:45 am]

BILLING CODE 6712-01-M

---

## 47 CFR Part 73

**[MM Docket No. 83-595; RM-4418]**

## FM Broadcast Station in Merced, California; Changes Made in Table of Assignments

**AGENCY:** Federal Communications Commission.

**ACTION:** Final rule.

**SUMMARY:** Action taken herein, at the request of Jack L. and Virginia Jo McFadden, to assign Channel 292A to Merced, California, as that community's third FM service.

**DATE:** Effective: June 19, 1984.

**ADDRESS:** Federal Communications Commission, Washington, D.C. 20554.

**FOR FURTHER INFORMATION CONTACT:** Mark N. Lipp, Mass Media Bureau, (202) 634-6530.

### List of Subjects in 47 CFR Part 73

Radio broadcasting.

### Report and Order (Proceeding Terminated)

In the matter of amendment of § 73.202(b), Table of Assignments, FM Broadcast Stations (Merced, California), MM Docket No. 83-595; RM-4418.

Adopted: April 11, 1984.

Released: April 17, 1984.

By the Chief, Policy and Rules Division.

1. The Commission has before it for consideration the *Notice of Proposed Rule Making*, 48 FR 30157, published June 30, 1983, proposing the assignment of Channel 292A to Merced, California, as that community's third FM broadcast channel. The *Notice* was adopted in response to a petition filed by Jack L. and Virginia Jo McFadden ("petitioners"). Supporting comments were filed by petitioners reaffirming their intention to apply for the channel, if assigned. No comments in opposition to the proposal were received.

2. The Commission believes that the public interest would be served by the assignment of FM Channel 292A to Merced, California, in order to provide a third FM service to the community. The assignment can be made in compliance with the minimum distance separation requirements of § 73.207 of the Commission's Rules.

3. Accordingly, pursuant to the authority contained in §§ 4(i), 5(c)(1), 303 (g) and (r) and 307(b) of the Communications Act of 1934, as amended, and §§ 0.61, 0.204(b) and 0.283 of the Commission's Rules, it is ordered, That effective June 19, the FM Table of Assignments, § 73.202(b) of the Commission's Rules, is amended for the following city:

| City | Channel No. |
|---|---|
| Merced, California | 248, 260, and 292A. |

4. It is further ordered, That this proceeding is terminated.

5. For further information concerning this proceeding, contact Mark N. Lipp, Mass Media Bureau, (202) 634-6530.

Federal Communications Commission.

Roderick K. Porter,

*Chief, Policy and Rules Division, Mass Media Bureau.*

[FR Doc. 84-11207 Filed 4-25-84; 8:45 am]

BILLING CODE 6712-01-M

---

## 47 CFR Part 73

**[MM Docket No. 83-831; RM-4481]**

## Television Broadcast Station in Toledo, Ohio; Changes Made in Table of Assignments

**AGENCY:** Federal Communications Commission.

**ACTION:** Final rule.

**SUMMARY:** Action taken herein assigns UHF TV Channel 40 to Toledo, Ohio, as that community's sixth television allocation, at the request of David E. Sparks.

**DATE:** Effective: June 19, 1984.

**ADDRESS:** Federal Communications Commission, Washington, D.C. 20554.

**FOR FURTHER INFORMATION CONTACT:** Leslie K. Shapiro, Mass Media Bureau, (202) 634-6530.

### List of Subjects in 47 CFR Part 73

Television broadcasting.

## Report and Order (Proceeding Terminated)

By the Chief, Policy and Rules Division.

In the matter of amendment of § 73.606(b), Table of Assignments, Television Broadcast Stations (Toledo, Ohio) MM Docket No. 83-831, RM-4481.

Adopted: April 12, 1984.
Released: April 17, 1984.

1. The Commission has before it for consideration its *Notice of Proposed Rule Making*, 48 FR 37267, published August 17, 1983, issued in response to a petition for rule making filed by David E. Sparks ("petitioner"), proposing the assignment of UHF TV Channel 40 to Toledo, Ohio. The assignment could provide Toledo with its fifth commercial television service. Petitioner filed comments reiterating his intent to apply for the channel.[1] Opposing comments and reply comments were filed by Toledo Telecasting, Inc. ("TTI"), permittee of Station WDMA-TV, Channel 36 in Toledo.

2. As stated in the *Notice*, the channel can be assigned in compliance with the Commission's minimum distance separation requirements provided the transmitter is sited at least 15 miles southwest of Toledo to avoid a short-spacing to Station WDMA, Channel 36, Toledo, and to Station CBEFT, Channel 54, Windsor, Ontario, Canada. TTI states that unless the transmitter for Channel 40 is located at least 20 miles from its own site, Station WDMA-TV could receive intermodulation interference, as recognized by the Commission's minimum spacing rules. In addition, it states that a transmitter site 15 miles southwest of Toledo would be near the Toledo Express Airport. In this area, TTI contends that it would be very difficult, if not impossible, to construct a tower of sufficient height to provide the required city-grade coverage to Toledo. Further, TTI states that if the petitioner chose to erect a tower away from the Toledo Express Airport, it would have to be located in the vicinity of Bowling Green, Ohio. This would require receiver antenna orientation different from that required for other area TV stations. Finally, TTI notes that the petitioner specified a site restriction to the north of Toledo while the Commission specified a southwest site.

3. In reply comments, TTI notes that petitioner made no mention of his willingness to operate from the restricted site, but merely reiterated his intention to apply for a construction permit on the channel, if assigned.

4. The Commission finds that the channel can be assigned as proposed. The site restriction imposed by the Commission ensures the required 20 mile spacing between Station WDMA-TV and a Channel 40 transmitter, thus negating the predicted intermodulation interference. The petitioner or any other interested party appears to have a choice of transmitter locations. If unable to obtain a suitable site near the Toledo Express Airport, the transmitter can be located in the vicinity of Bowling Green. Although it will mean that the successful applicant will be required to have a different receiver antenna orientation than the other area stations, this should not present any technical problems in placing an adequate signal over Toledo. Therefore, we find no technical reason to deny the assignment.

5. As to petitioner's lack of a specific statement of his ability and willingness to construct a station from the new site specified in the *Notice*, we note that he fully complied with the requirement that he reiterate his intention to apply for the channel, should it be assigned. We agree it should be emphasized that any potential applicant be aware of the site restriction.

6. As Toledo is located within 320 kilometers (200 miles) of the U.S.-Canadian border, the concurrence of the Canadian Government was sought and has been received.

7. Based on the above information, we find that the assignment of UHF TV Channel 40 to Toledo, Ohio, would be in the public interest as it could provide this community with a fifth commercial TV service. The assignment can be made in compliance with the Commission's minimum distance separation and other technical requirements and an interest in its use has been received. Therefore, in accordance with the authority contained in Sections 4(i), 5(c)(1), 303 (g) and (r) and 307(b) of the Communications Act of 1934, as amended, and §§ 0.61, 0.204(b) and 0.283 of the Commission's Rules, it is ordered, That effective June 19, 1984, the Television Table of Assignments, § 73.606(b) of the Rules, is amended with respect to the community listed below:

| City | Channel No. |
|---|---|
| Toledo, Ohio | 11-, 13, 24-, *30+, 36-, and 40-. |

8. It is further ordered, That this proceeding it terminated.

9. For further information concerning this proceeding, contract Leslie K. Shapiro, Mass Media Bureau, (202) 634-6530.

Federal Communications Commission.

Roderick K. Porter,

*Chief, Policy and Rules Division, Mass Media Bureau.*

[FR Doc. 84-11206 Filed 4-25-84; 8:45 am]

BILLING CODE 6712-01-M

[1] As noted by TTI, the comments of petitioner were filed two days late, with no reason being given for the lateness, nor a request for its acceptance. However, they will be accepted solely for the purpose of permitting the petitioner to reaffirm his interest in applying for the channel.

# Proposed Rules

Federal Register
Vol. 49, No. 82
Thursday, April 26, 1984

This section of the FEDERAL REGISTER contains notices to the public of the proposed issuance of rules and regulations. The purpose of these notices is to give interested persons an opportunity to participate in the rule making prior to the adoption of the final rules.

## DEPARTMENT OF AGRICULTURE

### Federal Grain Inspection Service

### 7 CFR Part 800

### Fees for Official Inspection, Official Weighing and Supervision of Official Services

*Correction*

In FR Doc. 84-10781 beginning on page 17009 in the issue of Monday, April 23, 1984, make the following corrections:

1. On page 17012, the "Note" at the end of Table 2 in the third column, should appear at the end of Table 1 in the second column.
2. On the same page, in the second column, in Table 1, the fee for (2)(B) now reading "5.30" should read ".30". The fee for (4)(ii) now reading ".26" should read ".25".
3. On page 17013, first column, the last line of § 800.73(c) should read "§ 800.47(b)".

BILLING CODE 1505-01-M

### Agricultural Marketing Service

### 7 CFR Part 927

[Docket No. AO-99-A4]

### Beurre D'Anjou, Beurre Bosc, Winter Nelis, Doyenne du Comice, Beurre Easter, and Beurre Clairgeau Varieties of Pears Grown in Oregon, Washington, and California: Hearing on Proposed Amendment of Marketing Agreement and Order 927, as Amended

**AGENCY:** Agricultural Marketing Service, USDA.

**ACTION:** Proposed rule and notice of public hearing.

**SUMMARY:** Notice is hereby given of a public hearing to be held to consider a proposed amendment of the marketing agreement and Marketing Order 927 (7 CFR Part 927), covering Beurre D'Anjou, Beurre Bosc, Winter Nelis, Doyenne du Comice, Beurre Easter, and Beurre Clairgeau varieties of pears (winter pears) grown in Oregon, Washington, and California. The proposal would authorize marketing promotion and paid advertising to promote the marketing, distribution and consumption of winter pears.

**DATE:** The hearing will begin at 9:00 a.m., Wednesday, May 30, 1984.

**ADDRESS:** The hearing will be held in Room 1573, Green/Wyatt Federal Building, 1220 SW. Third Avenue, Portland, Oregon.

**FOR FURTHER INFORMATION CONTACT:** William J. Doyle, Chief, Fruit Branch, Fruit and Vegetable Division, AMS, USDA, Washington, D.C. 20250. Telephone: 202-447-5975.

**SUPPLEMENTARY INFORMATION:** This amendment was proposed by the Control Committee established under the marketing agreement and order program which covers specified varieties of winter pears. The Department of Agriculture proposes that it be authorized to make any necessary conforming changes which may result from this proceeding.

This administrative action is governed by the provisions of Sections 556 and 557 of Title 5 of the United States Code and therefore is excluded from the requirements of Executive Order 12291.

The Regulatory Flexibility Act (Pub. L. 96-354), effective January 1, 1981, seeks to ensure that, within the statutory authority of a program, the regulatory and information requirements are tailored to the size and nature of small businesses. Interested persons are invited to present evidence at the hearing on the probable regulatory and informational impact of the proposals on small business.

The hearing is called pursuant to the provisions of the Agricultural Marketing Agreement Act of 1937, as amended (7 U.S.C. 601 *et seq.*), and the applicable rules of practice and procedure governing the formulation of marketing agreements and orders (7 CFR Part 900). The proposed amendment of the marketing agreement and order has not received the approval of the Secretary of Agriculture.

The public hearing is for the purpose of: (i) Receiving evidence about the economic and marketing conditions which relate to the proposed amendment of the marketing agreement and order; (ii) determining whether there is a need for amendment to the marketing agreement and order; and (iii) determining whether the proposed amendment or an appropriate modification of it will tend to effectuate the declared policy of the Act.

**List of Subjects in 7 CFR Part 927**

Marketing agreements and orders, Winter pears grown in Oregon, Washington, California.

### PART 927—BEURRE D'ANJOU, BEURRE BOSC, WINTER NELIS, DOYENNE DU COMICE, BEURRE EASTER, AND BEURRE CLAIRGEAU VARIETIES OF PEARS GROWN IN OREGON, WASHINGTON, AND CALIFORNIA

**Proposal by the Control Committee**

To revise § 927.47 to read:

**§ 927.47 Research and development.**

The Control Committee, with the approval of the Secretary, may establish or provide for the establishment of production research or marketing research and development projects designed to assist, improve, or promote the marketing, distribution, and consumption of pears, Such projects may provide for any form of marketing promotion, including paid advertising. The expense of such projects shall be paid from funds collected pursuant to § 927.41.

**Proposal by the Fruit and Vegetable Division, Agricultural Marketing Service:**

To make such changes as may be necessary to make both the marketing agreement and order conform with any amendment thereto that may result from the hearing.

(Secs. 1-19, 48 Stat. 31, as amended; 7 U.S.C. 601-674)

Dated: April 20, 1984.

William T. Manley,

*Deputy Administrator, Marketing Program Operations.*

[FR Doc. 84-11222 Filed 4-25-84; 8:45 am]

BILLING CODE 3410-02-M

**NATIONAL CREDIT UNION ADMINISTRATION**

**12 CFR Parts 701 and 741**

## Supervisory Committee Audits and Verifications

**AGENCY:** National Credit Union Administration.

**ACTION:** Proposed regulation.

**SUMMARY:** On September 7, 1983, the NCUA Board issued a Request for Comments on Section 701.12 of the NCUA Rules and Regulations, which requires that audits of federal credit unions be performed in accordance with the *Supervisory Committee Manual for Federal Credit Unions.* The proposed rule removes the requirement to follow a specific manual or guideline. Instead, the determination of the scope of audit is to be the responsibility of individual federal credit unions, with some general requirements. In addition, the proposed rule addresses the requirement of verifying member accounts and allows sampling for federal credit unions as well as for federally insured state credit unions.

**DATE:** Comments must be received on or before July 18, 1984.

**ADDRESS:** Send comments to Rosemary Brady, Secretary of the NCUA Board, National Credit Union Administration, 1776 G Street, NW., Washington, D.C. 20456.

**FOR FURTHER INFORMATION CONTACT:** Jerry L. Courson, Director, Department of Supervision and Examination, at the above address. Telephone number: (202) 357-1065.

**SUPPLEMENTARY INFORMATION:** Effective May 27, 1982, the NCUA Board deregulated the *Accounting Manual for Federal Credit Unions.* The deregulation was due to the fact that credit unions are no longer structured or operated in a manner to have uniform and standardized procedures and services. As a result, a regulatorily designed and approved accounting manual was inadequate to the changing activities of many credit unions.

The primary responsibility of the supervisory committee is to ensure that the books and the records accurately and fairly report the financial condition of the credit union. Also, the supervisory committee acts as an internal auditor to ensure that the credit union is carrying out board policy, that credit union activities are in compliance with applicable law, and that members' interests are being served by all employees, officers, and business efforts. The supervisory committee is, in effect, the credit union's own "regulator."

In carrying out the committee's statutorily prescribed minimum duties of an audit and verification of member's accounts, the agency has regulated the details of this activity through the *Supervisory Committee Manual,* which was last updated in 1976. In view of the statutory and the regulatory changes governing credit union activities (including the deregulation of the Accounting Manual) and the diverse operating and business activities which have evolved since that date, the agency no longer believes that the issuance of a manual is sufficient to meet the widely varying audit and review requirements of each credit union's supervisory committee. While there is much commonality in audit and supervisory tasks, the supervisory committee activity which is appropriate for a small, single sponsor-based credit union versus a larger, multi-group field of membership will be considerably different. Just as each credit union board is now responsible for managing share pricing and funding strategies, the supervisory committee must carry out its duties in a manner responsive to each credit union's circumstances. While the NCUA manual can be a reference together with other audit and accounting guides, the supervisory committee must use good judgment in determining the scope, the frequency, and the detail of the committee's activities. Therefore, this rule, while deregulating the *Supervisory Committee Manual,* in no way lessens the responsibilities of the committee. Rather, it recognizes that a credit union's audits and reviews must reflect each credit union's business activities and financial and operating condition. The committee's work requires judgment of each credit union's needs based on an analysis of each institution's strengths and weaknesses.

### Audits

Section 115 of the Federal Credit Union Act requires the supervisory committee of the federal credit union to make or cause to be made an annual audit. Section 701.12(a) of the NCUA Rules and Regulations presently requires that the audit be made in accordance with the requirements and the standards set forth in the *Supervisory Committee Manual for Federal Credit Unions* (NCUA 8023) (Supervisory Committee Manual). This regulation also dictates the form to be used to report the audit results to the board of directors. In addition, Section 701.12(b) requires that the workpapers prescribed by the manual be used to support the audit.

Regulation of this nature is no longer considered sufficient. The Federal Credit Union Act clearly lists the supervisory committee's audit requirements. Since the committee is responsible for the audit, it should determine the scope of the work to be performed. The scope of the work should be varied based on the nature of risk and exposure for each transaction or account being audited within each federal credit union. Various audit procedures and guidelines are avalable. For example, when the audit work is conducted by a professional outside auditor, generally accepted auditing standards of the American Institute of Certified Public Accountants may be considered in determining the audit scope. The Credit Union National Association has developed an instructional text, "Credit Union Auditing," which can provide guidance in determining the audit's scope. Finally, as a "deregulated" guide, the Supervisory Committee Manual can assist in developing an audit program.

On September 7, 1983, the NCUA Board approved the issuance of a Request for Comments on Rules Governing Supervisory Committee Audits of Federal Credit Unions. The 126 comment letters received support the position that the supervisory committee should determine the scope of audit using guidance provided by the accounting as well as the credit union industry, provided minimum audit standards were followed. An overwhelming majority of 87.3 percent of the comments supports updating the Supervisory Committee Manual and most comments state the manual should be a guideline.

Eighty-six comment letters (68.2 percent) indicate that NCUA should provide minimum requirements through regulations. It is no longer possible or desirable for the Agency to regulate detailed audit requirements. As a result, the proposed rule contains only basic auditing tests that are to be performed during audits.

In summary, it is no longer possible or practical for NCUA to regulate the step-by-step auditing procedures for federal credit unions by requiring supervisory committees to adhere solely to the contents of the Supervisory Committee Manual. It is practical for supervisory committees to determine audit procedures using the various available audit guidelines and some general auditing requirements.

### Verifications

Section 115 of the Federal Credit Union Act requires the supervisory

committee to verify members' accounts not less frequently than once every 2 years. This verification requirement has become exceedingly difficult to meet in some larger federal credit unions. At the same time, the use of sampling methods in auditing has become more common. The NCUA Board issued an Interpretive Ruling and Policy Statement (IRPS 80-12) on January 28, 1981, to address this issue. The ruling provides minimum standards for the use of statistical sampling. The ruling provides parameters that are needed for determining the size of a sample but does not provide the actual sample size needed based on the number of accounts in a credit union. As a result, there has been confusion as to the number of accounts to be verified. The proposed rule permits controlled random statistical sampling as long as the number and the scope of accounts verified are sufficient to provide assurance that the General Ledger accounts are fairly stated and that member accounts are properly safeguarded.

In addition to including the verification standards in § 701.12 of the rules and regulations, it is also necessary to reference this change in § 741.2, which establishes requirements for share insurance. Federally insured state credit unions are required to meet the same verification standards as federal credit unions, so the addition to § 741.2 allows state credit unions to use the same sampling procedures and meet the requriements for share insurance.

### Regulatory Flexibility Act

The proposed regulation eliminates the need to perform audits in accordance with the Supervisory Committee Manual. It, therefore, provides supervisory committees with greater flexibility in performing audits required by the Federal Credit Union Act. A regulatory flexibility analysis was not prepared for this proposed regulation since it was determined that the proposal will not result in any significant economic impact to a substantial number of small federal credit unions.

### Paperwork Reduction Act

The collection of information contained in this proposed rule has been submitted to the Office of Management and Budget for review under Section 3504(h) of the Act. Written comments and recommendations regarding the information collection requirements of this proposed rule should be forwarded directly to the OMB Desk Officer indicated below at the following address:

OMB Reports Management Branch, New Executive Office Building, Room 3208, Washington, DC 20503; Attn: Judith McIntosh.

### List of Subjects

*12 CFR Part 701*

Credit unions, reporting and recordkeeping requirements, Supervisory committee audits.

*12 CFR Part 741*

Credit unions, reporting and recordkeeping requirements.

Dated: April 18, 1984.

Rosemary Brady,

*Secretary of the Board.*

## PART 701—[AMENDED]

Accordingly, it is proposed that 12 CFR Section 701.12 be revised to read as follows:

**§ 701.12 Supervisory committee audits and verifications.**

(a) The supervisory committee is responsible to determine that the financial condition of the credit union is accurately and fairly presented in the credit union's statements and that management practices and procedures are sufficient to safeguard members' assets. To accomplish this responsibility, the supervisory committee shall determine that the credit union's accounting records and reports are prepared promptly and accurately reflect operations and results, that internal controls are established and effectively maintained to safeguard the credit union's assets, and that the plans, policies, and procedures established by the board of directors are being properly administered. The supervisory committee is also responsible for providing adequate safeguards against error, carelessness, fraud, and self-dealing (conflict of interest). The audit and verification of members' accounts, mandated in the Act, are the activities generally used to carry out these responsibilities; however, the committee is expected to exercise such other tests and reviews as may be necessary in the committee's judgment to meet its responsibilities.

(b) An audit of each federal credit union shall occur at least once every calendar year and shall cover the period elapsed since the last audit. The audit shall be made using generally accepted auditing procedures and standards. However, each federal credit union's annual audit shall, as a minimum, test the federal credit union's assets, liabilities, income, and expenses for existence, proper cut off, valuations, ownership, disclosures and classification, and internal controls. Upon completion, a report of the audit shall be made promptly to the board of directors of the federal credit union and, upon request, to the National Credit Union Administration's regional director. The scope, the purpose, and the adequacy of the committee's audit are judgments based on an analysis of the credit union's financial and operational condition.

(c) The supervisory committee and/or its independent auditors shall be responsible for the preparation and the maintenance of workpapers used to support each audit. Such workpapers shall be made available by the supervisory committee and its independent auditors for review by any employee of the National Credit Union Administration.

(d) Federal credit union compensated auditors, performing audits for supervisory committees, must be independent of the credit union's employees, members of the board of directors, supervisory and credit committees and/or the credit union's loan officers, and members of their immediate families.

(e) The verification of members' accounts shall be made using any of the following methods:

(1) A controlled verification of 100 percent of members' share and loan accounts;

(2) A random statistical sampling method that is consistent with generally accepted auditing standards and is performed in conjunction with an opinion audit that is unqualified with respect to members' accounts; or,

(3) A controlled random statistical sampling method that accurately tests sufficient accounts in both number and scope to provide assurance that the General Ledger accounts are fairly stated and that members' accounts are properly safeguarded. The sampling procedure must provide each member account an equal chance of being selected.

## PART 741—[AMENDED]

Additionally, it is proposed that 12 CFR 741.2 be amended by adding the following sentence at the end:

**§ 741.2 Minimum period for verification of accounts.**

* * * Information on the verification procedures can be found in § 701.12(e).

(The Federal Credit Union Act; (12 U.S.C. 1761d))

[FR Doc. 84-11224 Filed 4-25-84; 8:45 am]
BILLING CODE 7535-01-M

## 12 CFR Part 704

## Corporate Central Federal Credit Union

**AGENCY:** National Credit Union Administration (NCUA).

**ACTION:** Proposed rule.

**SUMMARY:** The National Credit Union Administration (NCUA) is publishing a proposed rule concerning corporate central credit unions 12 CFR Part 704. The proposal is being made as part of the agencies continuing program of review of regulations and as a result of provisions in the Garn-St. Germaine Act which permit the NCUA to differentiate the functions of corporate central credit unions from natural person credit unions. The proposal will update and provide flexibility in the rule.

**DATE:** Comments must be received on or before July 18, 1984.

**ADDRESS:** Send comments to Rosemary Brady, Secretary, National Credit Union Administration Board, 1776 G Street NW., Washington, D.C. 20456. Telephone: (202) 357-1100.

**FOR FURTHER INFORMATION CONTACT:** Jerry L. Courson, Director, Department of Supervision and Examination, or Robert A. Duff, department of Supervision and Examination. Telephone: (202) 357-1065.

**SUPPLEMENTARY INFORMATION:**

### Corporates Affected

The proposed rule applies to federally chartered corporates, which number 17 out of a total of 42 corporates nationwide. State-chartered corporates are not affected by this proposed rule except that proposed changes to reserves would impact on federally insured corporate credit unions by virtue of the National Credit Union Administration share insurance agreement.

### Background

Part 704 of NCUA's Rules and Regulations, Corporate Central Federal Credit Unions, is being reviewed as part of the Agency's continuing program of review of regulations and as a result of provisions in the Garn-St Germain Act, which permit the NCUA Board to differentiate the functions of corporate central credit unions from natural person credit unions through the issuance of rules or orders of the Board. Part 704 was promulgated in 1977 to define the terms "Corporate Central Federal Credit Union" and "Risk Assets" and to establish a special reserve account for corporate central federal credit unions. The regulation was subsequently revised, effective November 10, 1979, to provide additional requirements pertaining to the operations of corporate central federal credit unions. Specifically, sections were added covering "Management," "Annual Audit," and "Daily Balance Share Accounts." This latter revision was further clarified by Interpretive Ruling and Policy Statement IRPS 80-3, dated March 7, 1980.

### Existing Regulation

Sec.
704.0 Scope.
704.1 Definitions.
704.2 Corporate Central Reserve.
704.3 Management.
704.4 Annual Audit.
704.5 Daily Balance Share Account.

### Summary of Comments

A total of 34 comment letters were received. Of the 34 comments, six were from NCUA regions and offices, 10 were from the state leagues, none were from corporate central credit unions, and three were from national trade associations. Several of the comment letters represented the consensus opinion of large groups of credit unions (associations and leagues). Also, the New York Credit Union League submitted the results of a survey of approximately 130 individual credit unions. In the Request for Comments, several key issues were identified by NCUA staff. All commenters were in support of updating and of modifying the current regulation. The positions of the commenters on each issue are as follow:

*1. Representation on the Board and on the Committees*

The current regulation and IRPS 80-3 allow only representatives from credit unions to stand for election as an official. Accordingly, comments were requested on the degree to which natural persons and other organizations should be permitted to participate in the management of the corporate.

Many of the commenters supported removal of regulatory restrictions on officials. The commenters included six corporates, three state leagues, two trade associations and one NCUA region. Their sentiment is expressed by the following comment of a major trade association: "The existing restriction is at variance with the underlying philosophy of one-member-one-vote. From a business standpoint, the restriction is unnecessary since election requires any candidate to obtain sufficient votes for election and the vast majority of members will always be other credit unions. This ensures the continued control of the corporate by the credit unions it serves."

Also, some of the commenters suggested that each corporate have the authority to set qualifications for directors and committee persons as it sees fit. This position was expressed by the Association of Credit Union League Executives (ACULE) officials. This authority was requested so that corporates could establish geographic quotas (e.g., one official from each state the corporate serves); limitations on types of organizations represented or other qualifications that would restrict the composition of corporate credit union boards. ACULE specifically requested that qualification standards be implemented through bylaw amendments that are approved by NUCUA.

*Proposed Rule.* The existing restrictions in Section 704.3 and IRPS 80-3 are at variance with the underlying philosophy of one-member-one-vote. Therefore, NCUA is proposing to revise the rule to permit natural person members and designated representatives of nonnatural person members to vote, to stand for election, and to serve on the board and/or on committees. To continue the longstanding prohibition against voting by proxy, the proposed rule prohibits a person from serving as the designated representative of more than one member organization.

Staff does not support the request that corporates be allowed to establish qualifications which would limit participation by members of the corporate. Not only does such a limitation conflict with all members having an equal right to stand for office, but also corporate boards now appoint the nominating committee which, in turn, makes recommendations for officers and directors to the membership at elections. This practice provides a major opportunity to influence the composition of the board while still allowing all members a chance to be officials. Therefore, this suggested change has not been included in the proposed rule.

*2. Programs and Services*

NCUA requested comment on how to implement authority of corporate credit unions where their activity may be different from natural person credit union activity.

A significant percentage of commenters favored a broad regulatory definition of permissible activity,

coupled with a case-by-case approach to programs where the statutory basis was unclear. If a corporate had any doubts regarding its authority under the broad definition, it would then request an NCUA review.

*Proposed Rule.* NCUA proposes to issue a definition of permissible activity reflecting the wholesale nature of corporates. This broad definition should not be interpreted to cover non-financial intermediary activity or non-credit union activity such as insurance underwriting, securities brokerage, and those trust activities impermissible for natural person credit unions. The definition is intended to permit corporates to offer products and services that enhance their ability to serve natural person credit unions. In the event a corporate has any questions about a program's permissibility, the corporate may submit the questions or the service to NCUA for review. The Administration will routinely review any new programs and services during examinations for legality and propriety.

*3. Reserves and Equity Capital*

NCUA requested comment on the appropriate level of reserves and equity capital in corporates.

Many commenters favored increasing reserve equity by changing the transfer rates applied to gross income at the end of each dividend period, the overall statutory reserve level, or the definition of risk assets.

Other commenters favored the creation of a new kind of equity investment that would be "at risk" in the sense of having no insurance coverage and, thus, would be able to absorb corporate operating losses. These commenters included six corporates, three leagues, and one NCUA office. Credit unions replying to a New York League survey replied positively to the idea of an "at risk" equity concept. On the other hand, 9 percent (three of 34) of the commenters specifically voiced opposition to the concept for various reasons. Commenters voicing opposition included two corporates and one league.

The two national credit union trade associations supported no change in reserving at this time. NAFCU felt that changes to corporate reserves should not be made until the NCUA Board completes its separate review of reserves for natural person credit unions. CUNA's position is expressed in the following statement: ". . . consensus on the proper approach to corporate reserving does not exist and a regulatory change in the existing formula would appear premature."

*Proposed Rules.* The current corporate reserve structure calls for two levels of reserving. Initially, corporates were required to reserve on risk assets in the same manner as natural person credit unions. However, due to regulatory changes and to the wholesale operating nature of corporate credit unions, risk assets as traditionally defined in natural person credit unions have been virtually nil. Therefore, the building of statutory reserves in corporates was very low. As a result, in 1977, a special corporate reserve requirement was established. The corporate reserving requirements were set at 2 percent of gross income until reserves equal 1½ percent of total assets. These rates have remained unchanged over the last 7 years. The trends in the statutory reserve to asset ratio for all federally insured corporates since 1979 has been as follows:

| | 1979 | 1980 | 1981 | 1982 | 1983 |
|---|---|---|---|---|---|
| Reserve to asset | 1.1% | 0.5% | 0.8% | 0.7% | 1.0% |

(Source: page 36, NCUA 1983 Annual Report)

The figures indicate that reserves have yet to exceed the high point of 1.1% in 1979. The slight increase in the reserve ratio for 1983 was as much caused by the decline in corporate assets as by the absolute increase in corporate reserves. In summary, no growth in the relative level of corporate reserves has occurred over the last 5 years.

During this time, the financial markets have undergone extensive change brought on by the deregulation of financial institutions, as well as broader economic and credit union changes. While deregulation offers expanded opportunities, it also increases competition and risk to all financial institutions.

For example, the 1982 Penn Square Bank failure created severe losses in three corporate credit unions, resulting in one merger and two requests for special assistance. Other market "losses" have occurred due to the sale of long-term securities and the early redemption of CDs.

Recently, there have been comments by the FDIC and the FSLIC of the need to eliminate insurance coverage for funds placed in banks and in savings and loans by credit unions. These changes would be in addition to the recent change in insurance coverage on brokered funds by these two agencies.

These changes, increased competition, and continued deregulation have highlighted the need for all financial institutions to have strong reserves. Since the original level of corporate reserves was set without the benefit of an extended operating history, the NCUA Board believes it is appropriate to modify the regulation in light of recent experience and broader market events. Therefore, the Board proposes the following changes for federally insured corporate credit unions:

1. Eliminate the natural person reserving requirements for corporate credit unions;

2. Retain the 2 percent of gross income transfer that is required at the end of each dividend period prior to paying dividends. The NCUA Board believes that an increase in this rate is not justified at this time and in view of the impact this change would have on the corporate's ability to remain competitive;

3. In the offering of reverse repurchase programs, authorize corporates to calculate the reserve transfer requirement on the net spread when the corporate acts as an agent for its member credit unions. This makes no changes in the procedures now in effect;

4. Permit corporates to charge-off investment losses caused by factors other than trading losses or market fluctuations to the corporate reserve. For example, investment losses caused by the liquidation or the merger of a financial institution could be charged against the reserve; and,

5. Increase the 1½ percent overall statutory reserve level to 4 percent of total assets.

While the circumstances described earlier suggest the need for a higher level of reserves, the 4 percent is still lower than the 6 percent level established for natural person credit unions. While the risks of corporate credit unions are somewhat different from those of natural person credit unions, this lower level can be, in part, justified by the close working relationship among insured corporates, which brings a major element of self-help to problems in the corporate system. Also, all corporates now have access to the CLF and its stabilization assistance.

A limited survey of major corporate central federal credit unions revealed a consensus in favor of increasing reserves. However, because this reserve proposal would also apply to federally insured state corporates, NCUA specifically seeks their comments on this change.

Finally, since many commenters expressed an interest in "at risk" investments, the NCUA Board would welcome additional comments on this issue. Given that the vast majority of funds in corporates is uninsured and, therefore, already "at risk," we ask

commenters to clarify their perception of the greater role that "at risk" shares would have in corporate credit unions.

*4. Independent Audit*

The vast majority of commenters (27 of 34) supports retention of this section. Therefore, NCUA proposes to retain this section without change.

*5. Management Organization and Policies*

The majority of commenters (20 of 34) supports deletion of all or of part of § 704.3. Few commenters supported retention of the management policy section of the regulation because sound business practices would dictate adherence to these policies. Therefore, NCUA proposes to delete subsections (c) and (d) from § 704.3. Also, § 704.3 (a) and (b) are modified to reflect changes to member representation as discussed in item 1 in this section.

*6. Daily Balance Share Accounts*

All commenters agreed that there is no longer a need for § 704.5. Therefore, it will be deleted.

*7. Other Issues*

(a) Several commenters pointed out that current statutory interpretation prevents corporates from charging prepayment penalties on loans. For example, if a long-term, fixed-rate loan from a corporate is prepaid by a natural person credit union, the corporate could incur a significant loss due to the mismatch on the liability used to fund the loan. The result of this requirement is that corporates have been extremely reluctant to make any fixed-rate loans even though these could be match funded to eliminate interest-rate risk for both borrowers and lenders. Also, natural person credit unions have not had the opportunity to borrow at fixed rates when this could be advantageous for them.

In order to provide natural person credit unions the opportunity to borrow from corporates at fixed rates and to allow the corporate to provide such facilities without incurring the risk of a mismatch through an unanticipated prepayment, the National Credit Union Administration Board is proposing that corporate federal credit unions be allowed to charge prepayment penalties.

The legal authority to permit prepayment penalties for corporate credit unions is derived from the Garn-St Germain Act and, therefore, sets no precedent for permitting natural person credit unions to charge penalties on loans to natural person members (which is prohibited by the Federal Credit Union Act).

(b) One corporate credit union suggested removal of the 50 percent (of assets) borrowing limit so that maximum liquidity could be made available to the industry. With only one commenter suggesting this, the Board does not intend to review the matter further.

Procedures for Regulatory Development

The proposed rule will not have a significant economic impact on a substantial number of small credit unions. As a result of their mission of serving other credit unions, corporate federal credit unions are among the largest credit unions in assets. As of year-end 1983, there were no operating corporate federal credit unions having assets of less than $1 million. Therefore, a Regulatory Flexibility Analysis is not required.

List of Subjects in 12 CFR Part 704

Credit unions.

By the National Credit Union Administration Board on the 18th day of April 1984.

Rosemary Brady,

*Secretary of the NCUA Board.*

## PART 704—CORPORATE CENTRAL FEDERAL CREDIT UNIONS

Sec.

704.0 Scope.
704.1 Definitions.
704.2 Corporate Central Reserve.
704.3 Management.
704.4 Annual audit.
704.5 Programs and services.
704.6 Prepayment penalties.

AUTHORITY: 12 U.S.C. 1766(a)

### § 704.0 Scope.

(a) This part contains those regulations governing the operations of and the requirements for corporate central federal credit unions where such operations and requirements differ from those of natural person federal credit unions.

(b) Part 702 of this chapter sets forth the reserving requirements for federal credit unions. This part eliminates the existing regular reserve structure and creates a corporate central reserve.

(c) The regulation sets out procedures for representation on the board of directors and the credit committees of corporate central federal credit unions. In addition, annual audit requirements are described and establishment of programs and of services is addressed.

### § 704.1 Definitions.

(a) "Corporate central federal credit union" means a federal credit union operated for the primary purpose of serving corporate accounts. A federal credit union will be deemed to be a corporate central federal credit union when its total dollar amount of outstanding corporate loans plus corporate shareholdings is equal to, or in excess of, 75 per centum of its total outstanding loans plus shareholdings.

(b) "Natural person federal credit union" means any federal credit union that is not a corporate central federal credit union.

### § 704.2 Corporate Central Reserve.

(a) A corporate central federal credit union shall establish and maintain a Corporate Central Reserve described as follows: Immediately before the payment of each dividend, the treasurer shall determine the gross income of the corporate central federal credit union. From this amount, there shall be transferred to a reserve to be known as the Corporate Central Reserve, as of the end of each dividend period, 2 per centum of gross income until the Corporate Central Reserve shall equal *4* per centum of the corporate central federal credit union's total assets.

(b) Whenever the Corporate Central Reserve falls below *4* per centum of total assets, it shall be replenished by regular transfers of 2 per centum of gross income or by contributions in such amounts as may be needed to maintain the Corporate Central Reserve at *4* per centum of total assets, whichever is less.

(c) Charges may be made against the Corporate Central Reserve to the same extent and in the same manner as those permitted to be made against the Regular Reserve pursuant to § 702.2 of this chapter, except that investment losses caused by factors other than trading losses or market fluctuations may be charged against the reserve. No other charges shall be made against the Corporate Central Reserve except as may be authorized in writing by the board or by its designee.

(d) The reserving transfer requirements for federal credit unions in Part 702 shall not apply to corporate central credit unions.

### § 704.3 Management.

(a) A nonnatural person member of a corporate central federal credit union may appoint a representative to the corporate central federal credit union. This representative shall be empowered to attend meetings, to vote, and to stand for election on behalf of the member.

(b) No individual may serve as the designated representative of more than one organaization.

### § 704.4 Annual audit.

(a) The supervisory committee shall cause an annual audit to be made by an

independent, duly licensed auditor and shall submit the audit report to the board of directors. A summary of the audit report shall be submitted to the membership at the next annual meeting.

(b) A copy of the audit report shall be submitted to the appropriate regional office of the National Credit Union Administration within 30 days after receipt by the board of directors.

**§ 704.5 Programs and Services.**

Subject to the Federal Credit Union Act, Bylaws, and other National Credit Union Administration rules and orders of the Board, a corporate central federal credit union in its role as financial intermediary may make available to its member credit unions programs and services involving investments, liquity management, payment systems, and correspondent services.

**§ 704.6 Prepayment penalties.**

Corporate central federal credit unions are authorized to assess prepayment penalties on loans made to natural person credit unions or to other organizations in order to facilitate the corporation's management of funds.

[FR Doc. 84-11223 Filed 4-25-84; 8:45 am]
BILLING CODE 7535-01-M

## CONSUMER PRODUCT SAFETY COMMISSION

## 16 CFR Part 1500

## Hazardous Substances and Articles Amendments to Flammability Regulations

**AGENCY:** Consumer Product Safety Commission.

**ACTION:** Proposed rule.

**SUMMARY:** The Commission proposes to amend its regulations for classifying extremely flammable, flammable and combustible hazardous substances which release ignitible vapors. These flammability classifications are used for regulatory purposes, including hazard labeling. The amendments change the definitions of these classifications and specify a different test method for determining the classification of these substances. The changes would bring the Commission's procedures into general conformity with the practices of other Federal agencies and voluntary standards setting organizations.

**DATES:** (1) *Effective date:* The Commission proposes an effective date that is one year after any final regulation is published.

(2) *Written comments:* Written comments on the proposal must be submitted to the Commission on or before August 24, 1984.

**ADDRESS:** Written comments, preferably in five copies, should be submitted to the Secretary, U.S. Consumer Product Safety Commission, Washington, D.C. 20207 and should be titled: "FHSA Flammability Regulations—Amendments."

All materials the Commission has that are relevant to this proceeding, including any comments that may be received on this proposal, may be seen in, or copies obtained from, the Office of the Secretary, Third Floor, 1111 18th Street, NW., Washington, D.C. 20207.

**FOR FURTHER INFORMATION CONTACT:** Allen F. Brauninger, Attorney, Office of General Counsel, Consumer Product Safety Commission, Washington, D.C. 20207; telephone (301) 492-6980.

**SUPPLEMENTARY INFORMATION:**

### A. Background

The Federal Hazardous Substances Act (FHSA, 15 U.S.C. 1261), among other things, requires cautionary labeling for household substances that are hazardous substances as a result of their flammability or combustibility. (About 10,500 victims annually seek hospital emergency room treatment for burns associated with the use of flammable liquids, including gasoline, kerosene, lighter fluids, alochol, solvents, paint and paint thinners. At least 150 persons die each year as a result of burn injuries associated with these products. [1]) As originally enacted (Pub. L. 86-613, 74 Stat. 372, July 12, 1960), the FHSA included at section 2(1) definitions of the terms "extremely flammable" and "flammable." In 1969, the FHSA was amended to define the term "combustible," and to require the labling of flammable hazardous substances which fall within the definition of the term "combustible" (Pub. L 91-113, 83 Stat. 187-189). After the 1969 amendments, the FHSA provided that the term "extremely flammable" applied to any substance having a flashpoint at or below 20°F; the term "flammable applied to any substance having a flashpoint above 20°F to and including 80°F; and the term "combustible" applied to any substance having a flashpoint above 80°F to and including 150°F. The FHSA specified a certain test method for determining flashpoints, known as the "Tagliabue Open-Cup Test Method," except in the case of substances that are solids or the contents of self-pressurize containers, where the agency administering the act could specify the test method.

The classification of the Flammability properties of substances is necessary to evaluate the relative fire hazards of materials that can burn. In classifying substances, one property that is usually considered is the lowest temperature at which the material will release vapors that can be ignited by an external ignition source. This temperature can be determined experimentally for liquids, viscous liquids (pastes, gels, and semi-solids), and some solids by using a flashpoint test. Although there are various test methods for determining flashpoint, all of these methods involve slowly heating the substance to be tested in an open or closed container while an ignition source is periodically introduced into the vapor space of the material. the lowest temperature at which the vapors ignite is known as the flashpoint.

The flashpoint of a substance does not, by itself, provide a complete evaluation of the fire hazard of a material. The environment of intended use is another important consideration in any evaluation of fire hazard. However, flashpoint testing is relatively quick and simple; is generally reproducible; and involves uncomplicated and relatively inexpensive test apparatus. As a result, flashpoint test methods are generally recognized to be the most appropriate single measure of flammability hazard and are currently used as the primary method for classifying the flammability hazards of vapor-producing materials throughout most of the world (2).

Various states imposed flashpoint testing requirements around 1860, largely because of accidents due to the presence of highly volatile hydrocarbon fractions in "lamp oil." The earliest formal test method was probably an open test instrument developed by Guiseppe Tagliabue of New York. At the present time in the United States, the most commonly used flashpoint test apparatus are: Setaflash Closed-Cup; Tagliabue Closed-Cup; Pensky-Martin Closed-Cup; Tagliabue Open-Cup; Cleveland Open-Cup; and Setaflash Open-Cup (2).

Unfortunately, the different test apparatus do not normally give the same test results and do not provide a constant relationship among all of the results obtained. Moreover, different test methods using the same piece of

[1] Even non-fatal injuries are likely to be very serious. As an example, about 24 percent of the more than 8,000 persons treated in hospital emergency rooms for gasoline related burns were injured seriously enough to require admission for hospitalized care. By comparison, only 4 percent of all emergency room victims are admitted for in-patient care, and only 9 percent of all burn inujury victims are admitted for such care. (1) (References are to the Bibliography at the end of this notice.)

equipment can give different flashpoint temperatures. These differences have created a lack of uniformity and in some cases confusion involving city, state, and Federal regulatory bodies. In 1974, in an effort to achieve general uniformity, the Department of Transportation (DOT) published hazardous materials regulations that were generally consistent with flammability regulations issued by the Department of Labor at 29 CFR 1910.106(a), and model flammability requirements published by the National Fire Protection Association. DOT also consolidated air, water, and surface transportation regulations and issued changes in marking, labeling, placarding, and document action requirements for hazardous materials subject to its jurisdiction. The DOT amendments changed predominantly open-cup test methods (like the one specified by the FHSA as originally enacted) to closed-cup test methods. The DOT amendments also provided for supplementary testing to prevent the incorrect classification of materials due to contaminants or additives that raise or lower test temperatures without substantially affecting the fire behavior of the materials.[2]

The change by DOT left the CPSC as one of a few Federal agencies required by statute to use the open-cup test method.

To remedy this situation, in 1978 Congress amended section 2(1) of the FHSA to remove the requirement that flashpoints must be determined by use of the Tagliabue Open-Cup test apparatus (Pub. L. 95-631, 92 Stat. 3742, November 10, 1978). The amendments directed the Commission to issue regulations that define the terms "extremely flammable," "flammable," and "combustible," and specify test methods found to be generally applicable for defining flammability and combustibility characteristics of substances which release ignitible vapors. In establishing definitions and test methods, the Commission must consider existing definitions and test methods of other federal agencies and must, to the extent possible, establish compatible definitions and test methods. Thus, proposal of the amendments published below is necessary to comply with the 1978 amendments to the FHSA.

## B. Description of the Amendments

In this notice the Commission proposes to amend the existing flammability regulations under the FHSA to implement the Congressional directive contained in the 1978 amendments to that act. The proposed amendments include new definitions for the terms "extremely flammable," "flammable," and "combustible" for substances which release ignitible vapors, as well as a different test apparatus for assessing flashpoint flammability characteristics. The Commission proposes to effect these changes by amending the definitions at 16 CFR 1500.3(c)(6) to provide that the term "flammable" would apply to any substance having a flashpoint above 20°F to and including 100°F, and in the term "combustible" would apply to any substance having a flashpoint above 100°F to and including 150°F. The present temperature limits in the definition of "extremely flammable" as any substance having a flashpoint at or below 20°F would remain unchanged. The classifications of "flammable" and "combustible," as redefined, include exemptions for mixtures of substances where only a percentage (1 percent) of the mixture has a flashpoint within the required range, and exemptions for certain mixtures of liquids with alcohol.

The proposal would also amend section 1500.43 to describe different methods and apparatus for determining flashpoint using the Setaflash[3] closed tester instead of the Tagliabue Open-Cup tester. The test method set forth in proposed § 1500.43 closely parallels the test method designated ASTM D 3828-81, "Standard Test Methods for Flash Point by Setaflash Closed Tester," published by the American Society for Testing and Materials (ASTM), 1916 Race Street, Philadelphia, Pennsylvania 19103. The principal differences between proposed § 1500.43 and the ASTM procedure are that proposed § 1500.43 omits reference to the high-temperature Setaflash Cup, and thus is applicable only to operation of the Setaflash low-range apparatus. Additionally, proposed § 1500.43 contains provisions for testing viscous materials.

The proposal includes provisions at § 1500.43(a)(4) that would allow the Commission to initiate a rulemaking proceeding to classify a substance in a different category if experience or other data show that the flammability hazard is greater or lesser than that indicated by the results of the test method. At § 1500.43(b)(3), the proposal also includes a provision that would allow the Commission to modify the test procedures to address special circumstances to ensure that the test results reflect the hazard under reasonable forseeable conditions of use.

The proposal would change one part of the test method for classifying extremely flammable and flammable contents of self-pressurized containers by specifying the use of a closed-cup apparatus rather than an open-cup apparatus for determining flashpoints. See proposed § 1500.46. However, the test for determination of flashback in § 1500.45 is unaffected by the amendments proposed below. The proposal does not change the existing test method for determining extremely flammable and flammable solids specified by § 1500.44, because that test does not involve measurement of flashpoint temperatures.

## C. Reasons for the Proposed Amendments

The proposed amendments would bring the Commission's regulations into general conformity with the provisions of most other Federal agencies with respect to the flammability testing of hazardous substances. At the present time, most other Federal agencies use closed-cup flashpoint test methods to determine flashpoint temperatures. These agencies include the Department of Transportation and the Occupational Safety and Health Administration of the Department of Labor. The Commission knows of only two other Federal agencies which use or require open-cup test methods to determine flashpoint temperatures. One of these agencies is the Pesticide Regulation Division of the Environmental Protection Agency, which technically requires test results using an open-cup method, but accepts results using closed-cup methods, and contemplates changing to a closed-cup test method at some future date. The other is the Coast Guard, which enforces regulations prescribing an open-cup method for determining flashpoints of hazardous materials shipped as bulk cargo.

The closed-cup test method is superior to the open-cup test method because it is more reproducible. The closed testing apparatus which collects vapors more nearly under equilibrium conditions is subject to less variation in vapor concentration caused by differences in ventilation from time to time or from one laboratory to another. (4,6). The closed-cup test method is also more precise and reliable than the open-cup method (5).

In addition to achieving uniformity, the proposed change in test method should lessen the present burden for many producers of household substances by eliminating the need to run tests using the closed-cup test

[2] The DOT requirements for labeling and shipment of hazardous materials are published in the Code of Federal Regulations at 49 CFR Parts 100 through 189.

[3] Setaflash is a registered trademark of Stanhope-Seta Limited, Surrey, England.

method for shipping, storage, and insurance purposes, and other tests using the open-cup test method for purposes of cautionary labeling for consumers.

Proposed § 1500.3(c)(6)(iv) states that the Commission will use the closed-cup apparatus and test procedure described in the proposed amendment of § 1500.43 when testing for compliance with the requirements of the FHSA. However, that section of the proposal also states that manufacturers of household products which are subject to FHSA requirements may continue to rely on properly conducted tests using the Tagliabue open-cup method and the definitions of the terms "extremely flammable," "flammable," and "combustible" contained in § 1500.3(c)(6) before amendment if all of the following conditions are met:

(1) The product was subject to FHSA requirements for "extremely flammable," "flammable," or "combustible" hazardous substances before the effective date of the amendment of § 1500.43; and

(2) No change has been made to the formulation or labeling of the product since the amendment of § 1500.43.

Consequently, the amendments proposed below, if issued on a final basis will not require any manufacturer to conduct new tests using closed-cup apparatus and procedures or to relabel any product which is now correctly labeled in accordance with provisions of existing § 1500.3(c)(6).

Proposed §§ 1500.3(c)(6)(ii) and (iii) contain exemptions for substances having trace amounts (less than one percent) of low flashpoint ingredients. These provisions are consistent with those of DOT and OSHA regulations and are intended to avoid cautionary labeling that overstates the flammability hazard, since these trace amounts do not add to the flammability hazard of the substance.

Proposed §§ 1500.3(c)(6)(ii) and (iii) also provide exemptions for materials containing up to 24 percent alcohol if the remainder of the mixture does not present a flammability hazard. These provisions are similarly consistent with DOT requirements and are proposed to avoid overstating flammability hazards. In general, these substances do not have a flashpoint when tested in the open-cup test apparatus presently used. For example, some liquid dishwashing detergents contain varying amounts of alcohol, and may have a closed-cup flashpoint in the flammable range. However, these products can also be used to extinguish fires (3).

Proposed § 1500.43(a)(4) states that the Commission may classify a substance in a different category based on experience or other data indicating a greater or lesser hazard than that indicated by the test method. This provision of the proposed amendments is also intended to avoid classifications that overstate or understate the flammability hazard. Provisions of proposed § 1500.43(a) which allow the Commission to modify the test procedures to reflect reasonably foreseeable conditions of use have been included for the same reason.

## D. Economic Effects

In February of 1980, an outside contractor completed a report to the Commission on the anticipated economic consequences of an earlier draft of a proposal to amend the FHSA regulations by changing from the Tagliabue open-cup method for determining flashpoint to a closed-cup method, and by modifying the definitions of the terms "extremely flammable," "flammable," and "combustible" hazardous substances. (4)

After considering that report, the Commission staff revised the proposal. The amendments proposed below differ from the proposed changes to the FHSA regulations which were the subject of the contractor's report in two significant ways:

1. The amendments proposed below contain provisions at § 1500.3(c)(6)(iv) which allow manufacturers to continue to rely on data from testing in accordance with the open-cup method and existing definitions of flammability categories for purposes of compliance with FHSA requirements as long as no change is made to the formulation or labeling of a product; and

2. The amendments proposed below retain the 150° flashpoint as the upper limit for classification as a "combustible" hazardous substance, rather than the expanded upper limit of 200°F in the earlier of the proposed amendments.

Because of these differences between the earlier draft of the amendments and the proposal published below, much of the potential economic burden on manufacturers which may result from the proposed amendments, particularly to small manufacturers, has been eliminated.

Little change in the classification of "extremely flammable" substances would result from the proposed amendments because the temperature limit for classification in this category remains unchanged. Although the closed-cup test method generally gives results that are lower than the open-cup test method, at 20° F the temperature differential between the open- and closed-cup test methods is normally relatively small. At this temperature the change from open- to closed-cup test methods would affect at most a very small number of products, primarily because of the greater accuracy and precision of the closed-cup apparatus.

Most products with open-cup flashpoints of 100° F will have flashpoints of 90° F to 95° F when tested under the closed-cup test method. Many or most products with open-cup flashpoints of 200° F will have closed-cup flashpoints in the range of 185° to 195° F.

The change in the definition of "flammable" could affect products that are currently classified as "combustible" and have open-cup flashpoints from 80° F to about 110° F, or closed-cup flashpoints of about 75° F to 100 °. As a result of this change, some products in this range that are currently labeled as "combustible" products would require labeling as "flammable" products, if these products were reformulated or relabeled so that the provisions of proposed ¶ 1500.3(c)(6)(iv) would not be applicable. Few if any new costs are likely to be incurred by manufacturers as a result of the proposed amendment.

Since the amendment proposed below leaves the upper flashpoint limit for the combustible classification at 150° F, the proposed amendments are unlikely to result in imposing any labeling requirements are unlikely to result in imposing any labeling requirements on substances that are not currently subject to labeling under the FHSA. The Commission does not intend for this change in test methods to result in new labeling requirements for substances that are not currently subject to labeling requirements.

The Commission realizes that if the amendments proposed below are issued on a final basis, differences will continue to exist between labeling requirements for shipment and storage administered by DOT, and labeling requirements for household products administered by the Commission. The principal difference will be that some products with a flashpoint ranging from 151° F to 200° F will be subject to labeling requirements for "combustible" substances by DOT regulations, but will not be subject to any similar labeling requirement under the FHSA. While the Commission discourages the overlabeling of products—that is the use of labels which overstate the degree of hazard—it would not object to the labeling of household products having a flashpoint ranging from 151° F to 200° F with appropriate statements for "combustible hazardous substances" if

the amendments proposed below are issued on a final basis.

The Commission recognizes that products with a flashpoint temperature of 151°F or greater are outside the definition of the term "hazardous substance" for purposes of flammability labeling under the FHSA. However, the Commission considers the labeling of any such product as "nonflammable" or "noncombustible" to be inappropriate and misleading, if such products will ignite.

Changing from an open-cup to a closed-cup method for determining flashpoint will benefit many manufacturers because they will no longer be required to perform separate open-cup tests for purposes of compliance with FHSA requirements in addition to closed-cup tests for shipping and storage requirements. Additionally, many manufactures will benefit from provisions in the amendments proposed below which allow use of a flash/no flash method as an alternative to determining a finite flashpoint. A reduction in testing costs of 40 percent is estimated for manufacturers who perform their own testing.

The Commission estimates that the change from the open-cup to the closed-cup test method could reduce total testing costs for all producers by $1 million per year.

The proposed amendments would also result in greater consistency among shipping carton labels and product labels with regard to flammability hazards.

E. Effective Date

The Commission is proposing an effective date that is one year after any final amendments to the flammability regulations are issued. The Commission encourages interested persons, in submitting comments on the proposal, to specifically address the issue of the effective date.

In choosing an effective date, a major factor the Commission will consider is the impact of different dates on manufacturers, especially small manufacturers, whose products are affected by the flammability regulations. The regulations, if issued in final form as they are proposed here, would result in a "flammable," as opposed to a "combustible," classification for many products when tested under the closed-cup test method. The products most likely to be affected by this change are paint products, asphalts and sealants, and automobile care products.

However, as discussed earlier, manufacturers who are currently labeling their products as "combustible" based on valid tests under the present open-cup test method may rely on these test results and are not required to conduct additional testing or relabel their products as a result of the test method change proposed here. The Commission believes that an effective date of one year should provide sufficient time for manufacturers, including small manufacturers, to become aware of the change in test method and conduct additional testing if they choose to do so.

F. Impact on Small Businesses

Section 603 of the Regulatory Flexibility Act (5 U.S.C. 601 *et seq.*) requires agencies to prepare and make available for public comment an initial regulatory flexibility analysis of the impact of a proposed rule on small entities, including small businesses. Section 605(b) of this act provides that an agency is not required to prepare a regulatory flexibility analysis where the agency certifies that the rule will not, if issued, have a significant economic impact on a substantial number of small entities. In accordance with section 605(b), the Commission certifies that the regulation proposed below, if issued on a final basis will not have a significant economic impact on a substantial number of small entities.

The amendments proposed below contain provisions at § 1500.3(c)(6)(iv) which allow manufacturers to continue labeling their products in accordance with existing definitions of the terms "extremely flammable," "flammable," and "combustible" hazardous substances as determined by use of the Tagliabue open-cup test method currently specified in existing regulations at 16 CFR 1500.43, as long as no change is made to the formulation or labeling of those products. Consequently, any small business which concludes that use of the definitions of "extremely flammable," "flammable," or "combustible" hazardous substance in the amendments proposed below, or that determination of flashpoint using the closed-cup method described in the proposal will have a significantly adverse economic impact, may continue to use existing definitions and test procedures as long as its products and their labels remain unchanged.

The amendments proposed below, if issued on a final basis, would change the classifications and test procedures for the flammability of household substances in order to make them generally consistent with the requirements of other Federal agencies. By promoting uniformity and consistency among the procedures of different Federal agencies, the regulation would in some cases decrease testing costs for small businesses and reduce overall compliance costs to small businesses by eliminating the need for separate labels for the shipping container and the consumer package caused by product differences between DOT regulations and CPSC regulations. However, for most small businesses, the potential beneficial economic impact of the amendments proposed below, is not significant.

G. Environmental Considerations

The proposed regulations fall within the categories of Commission actions described at 16 CFR 1021.5(c) that have little or no potential for affecting the human environment. Since the primary effect of the proposed amendments will be on the test method for determining the flammability classification of household substances, the proposed action does not have the potential for producing significant environmental effects, and neither an environmental assessment nor an environmental impact statement is required.

H. Statutory Findings

Section 2(1) of the FHSA, as amended, provides that in establishing definitions and test methods related to flammability and combustibility, the Commission must consider existing definitions and test methods for other Federal agencies, and to the extent possible, establish compatible definitions and test methods that are generally applicable.

As explained earlier in this notice, the Commission has considered the definitions and test methods for the flammability of hazardous substances established by other federal agencies, including the Department of Transportation, the Department of Labor, and the Environmental Protection Agency. Based on information available at the present time, the Commission makes the preliminary determinations that the test method proposed here is of general applicability and that the proposed changes to the definitions and test methods for flammability under the FHSA are compatible with the provisions of other Federal agencies. Accordingly, the Commission has decided to propose these regulations as amendments to its existing regulations. The Commission is particularly interested in receiving comments on the issue of the compatibility of the proposed amendments with the requirements of other agencies and welcomes any suggestions how the amendments should be refined or clarified to be further in accord with the requirements of other agencies without

placing new burdens on manufacturers of household substances.

**I. Conclusion and Proposal**

Based on the foregoing information, the Commission proposes to amend the existing definitions of "extremely flammable," "Flammable," and "coumbustible" under the FHSA and proposes to adopt the closed-cup test method for assessing the flammability of substances, instead of the open cup test method presently used.

**List of Subjects in 16 CFR Part 1500**

Consumer protection, Hazardous substances, Labeling.

**PART 1500—[AMENDED]**

Therefore, in accordance with provisions of the Federal Hazardous Substances Act (secs. 2(1), 10(a); 15 U.S.C. 1261(1), 1269(a)) and under the authority of the Consumer Product Safety Act (sec. 30(a); 15 U.S.C. 2079(a)), the Commission hereby proposes to amend Chapter II, Subchapter C, Part 1500 of Title 16 of the Code of Federal Regulations, as follows:

1. Section 1500.3(b)(10) is proposed to be revised as follows:

**§ 1500.3 Definitions.**

* * * * *

(b) * * *

(10) The terms "extremely flammable," "flammable," and "combustible" as they apply to any substance, liquid, solid, or the contents of any self-pressurized container, are defined by regulations issued by the Commission and published at § 1500.3(c)(6).

* * * * *

2. Section 1500.3(c)(6) is proposed to be revised as follows:

* * * * *

(c) * * *

(6) The Consumer Product Safety Commission, by the regulations published in this section, defines the terms "extremely flammable," "flammable," and "combustible," appearing in section 2(1) of the Federal Hazardous Substances Act, as follows:

(i) The term "extremely flammable" shall apply to any substance which has a flashpoint at or below 20°F (−6.7°C) as determined by the test method described at § 1500.43, except that, any mixture having one component or more with a flashpoint higher than 20°F (−6.7°C) making up at least 99 percent of the total volume of the mixture is not considered to be an extremely flammable substance.

(ii) The term "flammable" shall apply to any substance having a flashpoint above 20°F to and including 100°F (37.8°C), as determined by the test method described at § 1500.43, except that:

(A) Any mixture having one component or more with a flashpoint higher than 100°F (37.8°C) making up at least 99 percent of the total volume of the mixture is not considered to be a flammable substance; and

(B) Any aqueous mixture containing 24 percent or less alcohol by volume is not considered to be flammable if the remainder of the mixture does not otherwise present any flammability hazard.

(iii) The term "combustible" shall apply to any substance having a flashpoint above 100°F (37.8°C) to and including 150 F (65.6°C) as determined by the test method described at § 1500.43 except that:

(A) Any mixture having one component or more with a flashpoint higher than 150°F (65.6°C) that makes up at least 99 percent of the total volume of the mixture is not considered to be a combustible substances; and

(B) Any aqueous mixture containing 24 percent or less alcohol by volume is not considered to be combustible if the remainder of the mixture does not present any flammability hazard.

(iv) To determine flashpoint temperatures for purposes of enforcing and administering requirements of the Federal Hazardous Substances Act applicable to "extremely flammable," "flammable," and "combustible" hazardous substances, the Commission will follow the procedures set forth in § 1500.43, as amended. However, the Commission will allow manufacturers of substances and products subject to those requirements to rely on properly conducted tests using the Tagliabue open-cup method which was in effect prior to the amendment of § 1500.43 (as published at 38 FR 27012, September 27, 1973; reprinted at Appendix I of this section) and the definitions of the terms "extremely flammable," "flammable," and "combustible" in this section before its amendments (as published at 38 FR 27012, September 27, 1983, and amended 38 FR 30105, November 1, 1973; reprinted at Appendix I of this section) if all of the following conditions are met;

(A) The substance or product was subject to and complied with the requirements of the Federal Hazardous Substances Act for "extremely flammable," "flammable," or "combustible" hazardous substances before the effective date of the amendment of § 1500.43; and

(B) No change has been made to the formulation or labeling of such substance or product after the effective date of the amendment of § 1500.43 to prescribe a closed-cup test apparatus and procedure.

(v) "Extremely flammable solid" means a solid substance that ignites and burns at an ambient temperature of 80°F or less when subjected to friction, percussion, or electrical spark.

(vi) "Flammable solid" means a solid substance that, when tested by the method described in § 1500.44, ignites and burns with a self-sustained flame at a rate greater than one-tenth of an inch per second along its major axis.

(vii) "Extremely flammable contents of self-pressurized container" means contents of a self-pressurized container that, when tested by the method described in § 1500.45, a flashback (a flame extending back to the dispenser) is obtained at any degree of valve opening and the flashpoint, when tested by the method described in § 1500.43, is less than 20° (6—6.7°C).

(viii) "Flammable contents of self-pressurized container" means contents of a self-pressurized container that, when tested by the method described in § 1500.45, a flame projection exceeding 18 inches is obtained a full valve opening, or flashback (a flame extending back to the dispenser) is obtained at any degree of valve opening.

3. Section 1500.3 is amended by adding an Appendix I, as follows:

**Appendix I to §1500.3**

1. Definitions of "extremely flammable," "flammable," and "combustible" hazardous substances in 16 CFR 1500.3(b)(10), as published in 38 FR 27012, September 27, 1973, and amended by 38 FR 30105, November 1, 1973:

"Extremely flammable" shall apply to any substance which has a flashpoint at or below 20° F. as determined by the Tagliabue Open Cup Tester; "flammable" shall apply to any substance which has a flashpoint of above 20° F., to and including 80° F., as determined by the Tagliabue Open Cup Tester; and "combustible" shall apply to any substance which has a flashpoint above 80° F. to and including 150° F., as determined by the Tagliabue Open Cup Tester; except that the flammability or combustibility of solids and of the contents of self-pressurized containers shall be determined by methods found by the Commission to be generally applicable to such materials or containers, respectively, and established by regulations issued by the Commission, which regulations shall also define the terms "flammable," "combustible," and "extremely flammable" in accord with such methods.

2. Definitions of "extremely flammable" and "flammable" hazardous substances in 16 CFR 1500.3(c)(6) as published at 38 FR 27012, September 27, 1983:

(i) "Extremely flammable" means any substance that has a flashpoint at or below 20° F. as determined by the method described in § 1500.43.

(ii) "Flammable" means any substance that has a flashpoint of above 20° F., to and including 80° F., as determined by the method described in § 1500.43.

3. Method for test for flashpoint of volatile flammable materials by Tagliabue open-cup apparatus in 16 CFR 1500.43, as published at 38 FR 27012, September 27, 1983:

*§ 1500.43 Method of test for flashpoint of volatile flammable materials by Tagliabue open-cup apparatus.*

Scope

1. (A) This method describes a test procedure for the determination of open-cup flashpoints of volatile flammable materials having flashpoints below 175° F.

(b) This method, when applied to paints and resin solutions which tend to skin over or which are very viscous, gives, less reproducible results than when applied to solvents.

Outline of Method

2. The sample is placed in the cup of a Tagliabue Open Tester, and heated at a slow but constant rate. A small test flame is passed at a uniform rate across the cup at specified intervals. The flashpoint is taken as the lowest temperature at which application of the test flame causes the vapor at the surface of the liquid to flash, that is, ignite but not continue to burn.

Apparatus

3. The Tagliabue open-cup tester is illustrated in Fig. 1. It consists of the following parts, which must conform to the dimensions shown, and have the additional characteristics as noted:

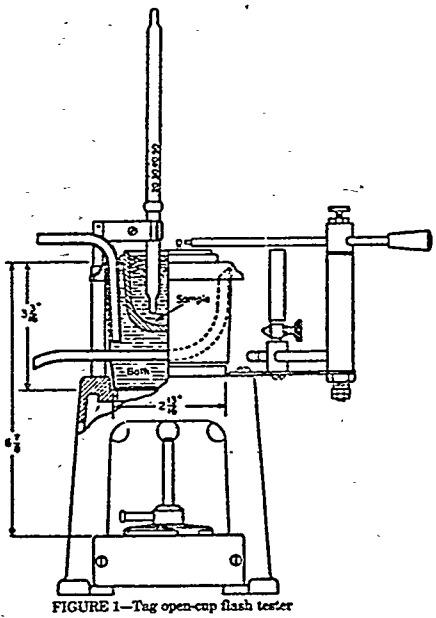

FIGURE 1—Tag open-cup flash tester

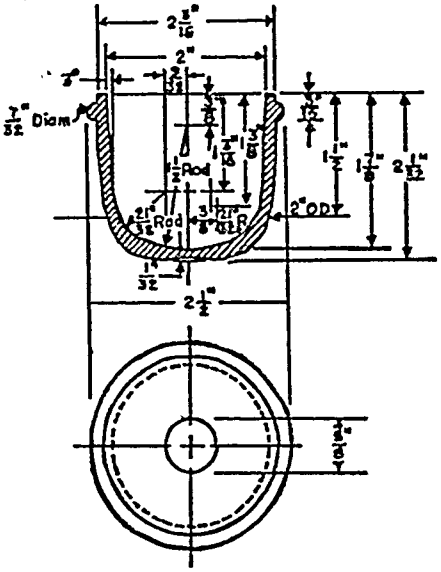

FIGURE 2—Glass test cup

(a) *Copper bath*, preferably equipped with a constant level overflow so placed as to maintain the bath liquid level ⅛ inch below the rim of the glass cup.

(b) *Thermometer holder*. Support firmly with ringstand and clamp.

(c) *Thermometer*. For flashpoints above 40° F., use the ASTM Tag Closed Tester Thermometer, range of +20 to +230° F., in 1° F. divisions, and conforming to thermometer 9F. of ASTM Standard E 1. For flashpoints from 20° F. to 40° F., use ASTM Tag Closed Tester, Low Range, Thermometer 57F. For flashpoints below 20° F., use ASTM Thermometer 33F. The original Tag Open-Cup (Paper Scale) Thermometer will be a permissible alternate until January 1, 1962. It is calibrated to −20° F.

(d) *Glass test cup*. Glass test cup (Fig. 2), of molded clear glass, annealed, heat-resistant, and free from surface defects.

(e) *Leveling device*. Leveling device or guide, for proper adjustment of the liquid level in the cup (Fig. 3). This shall be made of No. 18-gage polished aluminum, with a projection for adjusting the liquid level when the sample is added to exactly ⅛-inch below the level of the edge or rim of the cup.

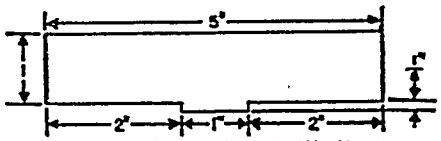

FIGURE 3—Leveling device for adjusting liquid level in test cup

(f) "Micro," or small gas burner of suitable dimensions for heating the bath. A screw clamp may be used to help regulate the gas. A small electric heater may be used.

(g) Ignition taper, which is a small straight, blow-pipe type gas burner. The test flame torch prescribed in the method of test for flash and fire points by Cleveland Open Cup (ASTM designation: D 92) is satisfactory.

(h) Alternative methods for maintaining the ignition taper in a fixed horizontal plane above the liquid may be used, as follows:

(1) Guide wire, 5/32-inch in diameter and 3½ inches in length, with a right-angle bend ½-inch from each end. This wire is placed snugly in holes drilled in the rim of the bath, so that the guide wire is ⅝-inch from the center of the cup and resting on the rim of the cup.

(2) Swivel-type taper holder, such as is used in ASTM METHOD D 92. The height and position of the taper are fixed by adjusting the holder on a suitable ringstand support adjacent to the flash cup.

(i) Draft shield, consisting of two rectangular sheets of noncombustible material, 24 inches x 28 inches, are fasteded together along the 28-inch side, preferably by hinges. A triangular sheet, 24 inches x 24 inches x 34 inches is fastened by hinges to one of the lateral sheets (to form a top when shield is open). The interior of the draft shield shall be painted a flat black.

Procedure

4. (a) Place the tester on a solid table free of vibration, in a location free of perceptible draft, and in a dim light.

(b) Run water, brine, or water-glycol solution into the bath to a predetermined level, which will fill the bath to ⅛-inch below the top when the cup is in place. An overflow is permissible for water-level control.

(c) Firmly support the thermometer vertically halfway between the center and edge of the cup on a diameter at right angles to the guide wire, or on a diameter passing through the center of the cup and the pivot of the taper. Place so that the bottom of the bulb is ¼-inch from the inner bottom surface of the cup. If the old Tagliabue thermometer is used, immerse to well cover the mercury bulb, but not the wide body of the thermometer.

(d) Fill the glass cup with the sample liquid to a depth just ⅛-inch below the edge, as determined by the leveling device.

(e) Place the guide wire or swivel device in position, and set the draft shield around the tester so that the sides form right angles with each other the tester is well toward the back of the shield.

(f) If a guide wire is used, the taper, when passed, should rest lightly on the wire, with the end of the jet burner just clear of the edge of the guide wire. If the swivel-type holder is used, the horizontal and vertical positions of the jet are so adjusted that the jet passes on the circumference of a circle, having a radius of at least 6 inches, across the center of the cup at right angles to the diameter passing through the thermometer, and in a plane ⅛-inch above the upper edge of the cup. The taper should be kept in the "off" position, at the end of the other of the swing, except when the flame is applied.

(g) Light the ingnition flame and adjust it to form a a flame of spherical form matching in size the 5/32-inch sphere on the apparatus.

(h) Adjust heater source under bath so that the temperature of the sample increases at a rate of 2 ±0.5° F. per minute. With viscous materials this rate of heating cannot always be obtained.

Initial Test

5. Determine an approximate flashpoint by passing the taper flame across the sample at intervals of 2° F. Each pass must be in one direction only. The time required to pass the ignition flame across the surface of the sample should be 1 second. Remove bubbles from the surface of the sample liquid before starting a determination. Meticulous attention to all details relating to the taper, size of taper flame, and rate of passing the taper is necessary for good results. When determining the flashpoint of viscous liquids and those liquids that tend to form a film of polymer, etc., on the surface, the surface film should be disturbed mechanically each time before the taper flame is passed.

Recorded Tests

6. Repeat the procedure by cooling a fresh portion of the sample, the glass cup, the bath solution, and the thermometer at least 20° F. below the approximate flashpoint. Resume heating, and pass the taper flame across the sample at two intervals of 5° F. and then at intervals of 2° F. until the flashpoint occurs.

Reporting Data

7. The average of not less than three recorded tests, other than the initial test, shall be used in determining the flashpoint and flammability of the substance.

Standardization

8. (a) Make determinations in triplicate on the flashpoint of standard paraxylene and of standard isopropyl alcohol which meet the following specifications:

(i) *Specifications for p-xylene, flashpoint check grade.* p-xylene shall conform to the following requirements:

Specific gravity: 15.56° C./15.56° C., 0.860 minimum, 0.866 maximum

Boiling range: 2° C. maximum from start to dry point when tested in accordance with the method of test for distillation of industrial aromatic hydrocarbons (ASTM designation: D 850), or the method of test for distillation range of lacquer solvents and diluents (ASTM designation: D 1078). The range shall include the boiling point of pure p-xylene, which is 138.35° C. (281.03° F.).

Purity: 95 percent minimum, calculated in accordance with the method of test for determination of purity from freezing points of high-purity compounds (ASTM designation: D 1016), from the experimentally determined freezing point, measured by the method of test for measurement of freezing points of high-purity compounds for evaluation of purity (ASTM designation: D 1015).

(ii) *Specifications for isopropanol, flashpoint check grade.* Isopropanol shall conform to the following requirements:

Specific gravity: 0.8175 to 0.8185 at 20° C./20° C. as determined by means of a calibrated pycnometer.

Distillation range: Shall entirely distill within a 1.0° C. range which shall include the temperature 80.4° C. as determined by ASTM method D 1078.

Average these values for each compound. If the difference between the values for these two compounds is less than 15° F. (8.5° C.) or more than 27° F. (16° C.), repeat the determinations or obtain fresh standards.

(b) Calculate a correction factor as follows:

$X=92-A$

$Y=71-B$

$$\text{Correction}=(X+Y)/2.$$

Where:

A=Observed flash of p-xylene, and

B=Observed flash of isopropyl alcohol.

Apply this correction of all determinations. Half units in correction shall be discarded.

Precision

9. (a) For hydrocarbon solvents having flashpoints between 60° F. and 110° F., repeatability is ±2° F. and the reproducibility is ±5° F.

(b) If results from two tests differ by more than 10° F., they shall be considered uncertain and should be checked. The calibration procedure provided in this method will cancel out the effect of barometric pressure if calibration and tests are run at the same pressure. Data supporting the precision are given Appendix III of the 1956 Report of Committee D-1 on Paint, Varnish, Lacquers and Related Products, Proceedings, Am. Soc. Testing Mats., Vol. 56 (1956).

4. Section 1500.43 is proposed to be revised as follows:

**§ 1500.43 Method of test for flashpoint of volatile flammable materials.**

(a) *Scope.* (1) This method describes the test procedure which the Commission will use for the determination of the flashpoint of volatile flammable materials, using a Setaflash [1] low-range closed tester, or an apparatus producing equivalent results. The method described in this section is essentially a Setaflash equilibrium procedure which closely parallels the test method designated ASTM D 3828-81, "Standard Test Methods for Flash Point by Setaflash Closed Tester," published by the American Society for Testing and Materials (ASTM), 1916 Race Street, Philadelphia, Pennsylvania 19103. Manufacturers and labelers of products subject to labeling and other requirements under the Federal Hazardous Substances Act may use other apparatus and/or test methods which produce equivalent results.

(2) At the option of the user, the procedures described in this section may be used to determine the actual flashpoint temperature of a sample or to determine whether a product will or will not flash at a specified temperature (flash/no flash).

(3) If the substance to be tested has a viscosity greater than 150 Stokes at 77°F (25°C), see paragraph (n) of this section modifications to the testing procedure.

[1] Setaflash is a registered trademark of Stanhope-Seta Limited, Surrey, England.

(4) If experience or other data indicate that the flammability hazard of a substance is greater or less than that indicated by the method specified here, the Commission may by regulation classify the substance in a different category than that indicated by the results of this test method.

(b) *Summary of test methods.* (1) Method A—Flash/No Flash Test. A specified volume of sample is introduced by a syringe into the cup of the apparatus that is set and maintained at the specified temperature. After a specific time a test flame is applied and an observation made as to whether or not a flash occurred. Test procedures are set forth in detail in § 1500.43(i).

(2) Method B—Finite (or Actual) Flashpoint. (i) A specified volume of sample is introduced into the cup of the apparatus that is maintained at the expected flashpoint. After a specified time a test flame is applied and the observation made whether or not a flash occured.

(ii) The specimen is removed from the cup, the cup cleaned, and the cup temperature adjusted 5°C (9°F), lower or higher depending on whether or not a flash occurred previoulsy. A fresh specimen is introduced and tested. This procedure is repeated until the flashpoint is established within 5°C (9°F).

(iii) The procedure is then repeated at 1°C (2°F) intervals until the flashpoint is determined to the nearest 1°C (2°F).

(iv) If improved accuracy is desired the procedure is repeated at 0.5°C (1°F). Test procedures are set forth in detail at § 1500.43(j).

(3) The test procedures will be modified, where necessary, to ensure that the results obtained reflect the hazard of the substance under reasonable foreseeable conditions of use. Thus, for example, the material, if a mixture, will normally be tested as it comes from the container, and/or after a period of evaporation. The period of evaporation for a material which is a mixture will normally be the time required for the mixture to evaporate in an open beaker under ambient conditions to 90 percent of its original volume, or a period of four hours, whichever occurs first. However, this period of evaporation will be changed if the results obtained do not represent the hazard of the substance under reasonable foreseeable conditions of use.

(c) *Definition of flashpoint.* The lowest temperature of the sample, corrected to a barometric pressure of 101.3 kPa (760 mm Hg), at which application of a test flame causes the

vapor of the sample to ignite under specified conditions of test. The sample is deemed to have flashed when a large flame appears and instantaneously propagates itself over the surface of the sample. Occasionally, particularly near actual flashpoint, the application of the test flame will cause a halo or an enlarged flame; this is not a flash and should be ignored.

(d) *Test apparatus.* The test apparatus shall be a Setaflash[1] tester or an apparatus producing equivalent results. The essential dimensions and requirements of the Setaflash [1] apparatus are shown in figure 1 and table 3. The Setaflash[1] and accessories are described in detail at section 1500.43(m). A commercially available unit is shown in figure 1. Closed-cup flashpoint testers and their accessories meeting these requirements are available from Erdco Engineering Corp., 136 Official Road, Addison, Illinois 60101, or Stanhope-Seta Ltd., Egham, Surrey, England.

(e) *Safety precautions.* The operator must exercise and take appropriate safety precautions during the initial application of the test flame to the sample. Samples containing low-flash material may give an abnormally strong flash when the test flame is first applied.

(f) *Preparation of samples.* (1) Erroneously high flashpoints may be obtained if precautions are not taken to avoid the loss of volatile material. In preliminary tests of materials taken directly from the container, do not open containers unnecessarily and make a transfer unless the sample temperature is at least 10°C (18°F) below the expected flashpoint. Do not use samples in leaky containers for this test.

(2) Do not store damples in plastic (polyethylene, polypropylene, etc.) bottles since volatile material may diffuse through the walls of the bottle.

(3) A 2-ml specimen is required for each test. If possible , obtain at least a 50-ml sample from the bulk test site and store in a clean, tightly closed container.

(g) *Preparation of apparatus.* (1) Place the tester on a level, stable surface. Unless tests are made in a draft-free area, surround the tester on three sides with a shield for protection. Do not rely on tests made in a laboratory draft hood or near ventilators.

(2) Read the manufacturer's instructions on the care and servicing of the instrument and for correct operation of its controls.

(h) *Calibration and standardization.* (1) Before initial use determine and plot the relationship between the temperature control dial and the thermometer readings at each major (numbered) dial division as follows: Turn the temperature control knob[2] fully counterclockwise ("O" reading). Advance the temperature control knob clockwise until the indicator light is illuminated[3]. Advance the knob clockwise to the next numbered line. After the thermometer mercury column ceases to advance, record the dial reading and the temperature. Advance the knob clockwise to the next numbered line. After the thermometer mercury column ceases to advance, read the dial reading and the termperature. Repeat this procedure through the full range of the instrument. Plot the dial readings versus the respective temperatures.

(2) Standardize the instrument using sample of material meeting the specifications in table 1. If the average of two determinations falls within the acceptable limits the instrument is assumed to be operating properly. If the average of the two determinations does not fall within this range, check the manufacturer's operating and maintenance instructions and determine that they are being followed. In particular, be sure that the cup lid assembly makes a vapor-tight seal with the cup, the shutter provides a light-tight seal, and that adequate heat transfer paste surrounds the thermometer bulb and the immersed portion of the barrel.

(i) *Test Method A—for determining Flash/No Flash.*

(1) Determine the target flashpoint as follows:

(i) Target flashpoint, °C=$S_c$−0.25 (101.3—A)

(ii) Target flashpoint, °C=$S_c$−0.03 (760—B)

(iii) Target flashpoint, °F=$S_f$−0.06 (760—B)

where:

$S_c$=specification, or uncorrected target, flashpoint, °C,

$S_f$=specification, or uncorrected target, flashpoint, °F,

B=ambient barometric pressure, mm Hg,[4] and

A=ambient barometer pressure, kPa.[4]

(2) Inspect the inside of the sample cup, lid, and shutter mechanism for cleaniness and freedom from contamination. Use an absorbent paper tissue to wipe clean, if necessary. Put cover in place and lock securely. The filling orifice may be conveniently cleaned with a pipe cleaner.

(3) Set the instrument at the target temperature.

(i) For target temperature below ambient. The instrument power switch is to be in the off position. Fill the refrigerant-charged cooling block with a suitable material. [5] Raise the lid and shutter assembly, and position the base of the block in the sample cup, being careful not to injure or mar the cup. When the thermometer reads approximately 6 to 10° C (10 to 20°F) below the target temperature, remove the cooling block and quickly dry the cup with a paper tissue to remove any moisture. Immediately close the lid and shutter assembly and secure. Prepare to introduce the sample using the syringe, both of which have been precooled to a temperature 5 to 10°C (10 to 20°F) below the target temperature.

(A) Caution: Do not cool the sample block below −38°C, the freezing point of mercury.

(B) Caution: Acetone is extremely flammable. Keep away from heat, sparks, and flames and keep container closed when not actually pouring acetone. Use only in a well-ventilated area. Avoid inhalation and contact with the eyes or skin. Use cloth or leather gloves, goggles or safety shield, and keep dry ice in a canvas bag, especially when cracking.

(ii) For target temperature above ambient. Switch the instrument on and turn the coarse termperature control knob fully clockwise (full on) causing the indicator light to illuminate. [6] When the thermometer indicates a temperature about 3°C (5°F) below the target (or specification) temperature, reduce the heat input to the sample cup by turning the coarse temperature control knob counter-clockwise to the desired control point (see § 1500.43(i)(l)(i)). When the

[2] If the instrument has two temperature control knobs, set the fine control (center, small knob) at its mid-position and allow it to remain there throughout the calibration. The calibration is determined by adjusting the coarse control (large, outer knob) only.

[3] When using the tester it will be found that the indicator light may not illuminate and the temperature may not rise until a temperature control dial setting between one and two is reached.

[4] The barometric pressure used in this calculation must be the ambient pressure for the laboratory at the time of test. Many aneroid barometers, such as those used at weather stations and airports, are precorrected to give sea level readings; these must not be used.

[5] If the target or specification temperature is less than 5°C (40°F), crushed ice and water may be used as charging (cooling) fluid. If below 5°C (40°F) a suitable charging (cooling) fluid is solid carbon dioxide (dry ice) and acetone. If the refrigerant charged cooling module is unavailable, refer to the manufacturer's instruction manual for alternative methods of cooling.

[6] The target temperature may be attained by originally turning the coarse temperature control knob to the proper setting (see § 1500.43(h)(l)) for the temperature desired rather than to the maximum setting (full on). The elapsed time to reach the temperature will be greater, except for maximum temperature. However, less attention will be required during the intervening period.

indicator light slowly cycles on and off read the temperature on the thermometer. If necessary, adjust the fine (center) temperature control knob to obtain the desired test (target) temperature. When the fest temperature is reached and the indicator lamp slowly cycles on and off, prepare to introduce the sample.

(4) Charge the syringe with a 2-ml specimen of the sample [7] to be tested; transfer the syringe to the filling orifice, taking care not to lose any sample; discharge the test specimen into the cup by full depressing the syringe plunger, remove the syringe.

(5)(i) Set the timer [7] by rotating its knob clockwise to its stop. Open the gas control valve and light the pilot and test flames. Admust the test flame with the pinch valve to conform to the size of the 4-mm (5/32-in.) gage.

(ii) After the time signal indicates the specimen is at test temperature [8], apply the test flame by slowly and uniformly opening the shutter and closing it completely over a period of approximately 2½ s. [9] Watch closely for a flash at the cup openings.

(iii) The sample is deemed to have flashed when a large flame appears and instantaneously propagates itself over the surface of the sample (see § 1500.43(c)).

(6) Record the test results as "flash" or "no flash" and the test temperature.

(7) Turn off the pilot and test flames using the gas control valve. Remove the sample and clean the instrument. It may be necessary to allow the cup temperature to decline to a safe level before cleaning.

(j) *Test Method B—for determining Finite or Actual Flashpoint.* (1) Inspect the inside of the sample cup, lid, and shutter mechanism for cleanlines and freedom from contamination. Use an absorbent paper tissue to wipe clean, if necessary. Put cover in place and lock securely. The filling orifice may be conveniently cleaned with a pipe cleaner.

(2) For expected flashpoints below ambient. (i) The instrument power switch is to be in off position. Fill the refrigerant-charged cooling block with a suitable material.[5] Raise the lid and shutter assembly, and position the base of the block in the sample cup, being careful not to injure or mar the cup. When the thermometer reaches a temperature 5 to 10°C (10 to 20°F) below the expected flashpoint, remove the cooling block and quickly dry the cup with a paper tissue to remove any moisture. Immediately close the lid and shutter assembly and secure. Prepare to introduce the sample using the syringe, both of which have been precooled to a temperature 5 to 10°C (10 to 20°F) below the expected temperature (See § 1500.43(j)(5)).

(ii) Caution: Do not cool the sample block below −38°C, the freezing point of mercury.

(3) For tests where the expected flashpoint is above ambient. Turn the coarse temperature control knob fully clockwise (full on) causing the indicator light to illuminate. When the thermometer reaches a temperature 3°C (5°F) below the estimated flashpoint, turn the coarse temperature knob counter-clockwise to the dial reading representing the estimated flashpoint temperture as shown on the calibration curve (See § 1500.43(h)(l)). When the indicator light slowly cycles on and off, read the temperature on the thermometer. If necessary, adjust the fine temperature control knob to obtain the exact desired temperture.

(4)(i) Charge the syringe[7] with a 2 ml specimen of the sample[7] to be tested; transfer the syringe to the filling orifice, taking care not to lose any sample; discharge the test specimen into the cup by fully depressing the syringe plunger; remove the syringe.

(ii) Set the timer[10] by rotating its knob clockswise to its stop. Open the gas control valve and ingnite the pilot and test flames. Adjust the test flame with the pinch valve to conform to the size of the 4-mm (5/32-in.) gage.

(iii) After the audible time signal indicates the specimen is at test temperature[10], apply the test flame by slowly and uniformly opening the shutter and then closing it completely over a period of approximately 2½ s. Watch closely for a flash at the cup opening.

(iv) The sample is deemed to have flashed only if a large flame appears and instaneously propagates itself over the surface of the sample. (See § 1500.43(c).)

(v) Turn off the pilot and test flames using the gas control valve. When the cup temperature declines to a safe level, remove the sample and clean the instrument.

(5)(i) If a flash was observed in § 1500.43(j)(4)(iii) repeat the procedure given in section 1500.43(j)(2) or (3), and in section 1500.43(j)(4), testing a new specimen at a temperature 5°C (9°F) below that at which the flash was observed.

(ii) If necessary, repeat the procedure in § 1500.43(j)(5)(i), lowering the temperature 5°C (9°F) each time, until no flash is observed.[9]

(iii) Proceed to § 1500.43(j)(7)

(6)(i) If no flash was observed in § 1500.43(j)(4)(iii) repeat the procedure given in § 1500.43(j)(2) or (3), and in § 1500.43(j)(4), testing a fresh specimen at a temperature 5°C (9°F) above that at which the specimen was tested in § 1500.43(j)(4)(iii).

(ii) If necessary repeat the procedure in § 1500.43(j)(6)(i), above, raising the temperature 5°C (9°F) each time until a flash is observed. [9]

(7) Having established a flash within 10 temperatures 5°C (9°F) apart, repeat the procedure at 1°C (2°F) apart, repeat the procedure at 1°C (2°F) intervals from the lower of the two temperatures until a flash is observed.[9] Record the temperature of the test when this flash occurs as the flashpoint, allowing for any known thermometer correction. Record the barometric pressure.[3]

(8) The flashpoint determined in § 1500.43(j)(7) will be to the nearest 1°C (2°F). If improved accuracy is desired (that is, to the nearest 0.5°C (1°F)), test a fresh specimen at a temperature 0.5°C (1°F) below that at which the flash was observed in § 1500.43(j)(7). If no flash is observed, the temperature recorded in § 1500.43 (j)(7), is the flashpoint to the nearest 0.5°C (1°F). If a flash is observed at the lower temperature, record this latter temperature as the flashpoint.

(9) Turn off the pilot and test flames using the gas control valve. When the cup temperature declines to a safe level, remove the sample and clean the instrument.

(k) *Calculations.* If it is desired to correct the observed finite flashpoint for the effect of barometric pressure, proceed as follows: Observe and record the ambient barometric pressure[4] at the time of the test. If the pressure differs from 101.3 kPa (760 mm Hg), correct the flashpoint as follows:

(1) Corrected flashpoint (°C)=C+0.25 (101.3-A)

(2) Corrected flashpoint (°F)=F+0.06 (760-B)

(3) Corrected flashpoint (°C)=C+0.03 (760-B)

Where: F=Observed flashpoint, °F, C=observed flashpoint, °C,

[7] For target, or expected, termperatures below ambient, both syringe and sample must be precooled to cup temperature (see § 1500.43(i)(3)(i)) before the specimen is taken.

[8] For target temperatures below ambient do not set the timer. Adjust the test flame and allow the temperature to rise under ambient conditions until the target temperature is reached. Immediately apply the test flame as detailed.

[9] Never apply the test flame to the specimen more than once. Fresh portions of the sample must be used for each test.

[10] For expected flashpoints below ambient do not set the timing device. Adjust the test flame. Allow the temperature to rise, under ambient conditions, until the temperature reaches 5°C (9°F) below the expected flashpoint. Immediately apply the test flame.

B=ambient barometric pressure, mm Hg.; and

A=ambient barometric pressure, kPa.

(l) *Precision.* The precision of the method as determined by statistical examination of interlaboratory results is as follows:

(1) Repeatability. The difference between two test results obtained by the same operator with the same apparatus under constant operating conditions on identical test material, would, in the long run, in the normal and correct operation of the test method, exceed the values shown in table 2 only in 1 case in 20.

(2) Reproducibility. The difference between two single and independent results obtained by different operators working in different laboratories on identical test material, would, in the long run, in the normal and correct operation of the test method, exceed the values shown in table 2 only in 1 case in 20.

(m) *Flash Test Apparatus.* (1)(i) Unit consisting of an aluminum alloy or non-rusting metal block of suitable conductivity with a cylindrical depression, or sample cup, over which is fitted a cover. A thermometer is embedded in the block.

(ii) The cover is fitted with an opening slide and a device capable of inserting an ignition flame (diameter 4 ± 0.5 mm) into the well when the slide device shall intersect the plane of the underside of the cover. The cover is also provided with an orifice extending into the sample well for insertion of the test sample and also a suitable clamping device for securing the cover tightly to the metal block. The three openings in the cover shall be within the diameter of the sample well. When the slide is in the open position, the two openings in the slide shall coincide exactly with the two corresponding openings in the cover.

(iii) Electrical heaters are attached to the bottom of the cup in a manner that provides efficient transfer of heat. An electronic heat control is required to hold the equilibrium temperature, in a draft-free area, within 0.1°C (0.2°F) for the low-temperature tester. A visual indicator lamp shows when energy is or is not being applied. Energy may be supplied from 120 or 240 V, 50 or 60 Hz main service.

(2)(i) Test flame and pilot flame-regulatable test flame, for dipping into the sample cup to try for flash, and a pilot flame, to maintain the test flame, are required. These flames may be fueled by piped gas service. A gage ring 4mm (5/32 in.) in diameter, engraved on the lid near the test flame, is required to ensure uniformity in the size of the test flame.

(ii) Caution: Never recharge the self-contained gas tank at elevated temperature, or with the pilot or test flames lighted, nor in the vicinity of other flames.

(iii) Audible Signal is required. The audible signal is given after 1 min in the case of the low-temperature tester.

(iv) Syringe. 2ml capacity, equipped with a needle suitable for use with the apparatus, adjusted to deliver 2.00 ± 0.05 ml.

(3) Essential dimensions of the test apparatus are set forth in table 3.

(n) *Testing high-viscosity liquids.* (1) High-viscosity materials may be added to the cup by the following procedure:

(i) Back load a 5 or 10-ml syringe with the sample to be tested and extrude 2 ml into the cup. Spread the specimen as evenly as possible over the bottom of the cup.

(ii) If the sample cannot be loaded into a syringe and extruded, other means of adding the sample to the cup may be used such as a spoon. Add approximately 2 ml of material to the spoon and then push the material from the spoon into the cup.

(iii) If the test specimen does not close the sampling port in the cup, seal the cup externally by suitable means.

(2) Using the appropriate procedure, either Method A in § 1500.43(i) or Method B in § 1500.43(j), determine the flashpoint of the specimen which has been added to the tester in accordance with § 1500.43(n)(i), except that the time specified is increased from 1 to 5 minutes for samples at or above ambient temperature.

TABLE 1—CALIBRATION OF TESTER

| | |
|---|---|
| Material | *p*-xylene[A] (Caution)[B]. |
| Specific gravity. 15.6/15.6°C (60/60°F). | 0.850 to 0.866. |
| Boiling range | 2 C maximum including 138.35°C (281.03°F). |
| Freezing point | 11.23°C (52.2°F) minimum. |
| Flashpoint °C (acceptable range). | 25.6±0.5 (78±a°F). |

[A] Available as Flash Point Check Fluid (p-xylene) from Special Products Div., Phillips Petroleum Co., Drawer 'O', Borger, Texas 79007.

[B] Caution: Handle xylene with care. Avoid inhalation: use only in a well-ventilated area. Avoid prolonged or repeated contact with skin. Keep away from flames and heat, except as necessary for the actual flashpoint determination.

TABLE 2—REPEATABILITY AND REPRODUCIBILITY

| Temperature, °C (°F) | Repeatability, °C (°F) | Reproducibility, °C (°F) |
|---|---|---|
| 20 (68) | 0.5 (0.9) | 1.4 (2.6) |
| 70 (158) | 0.5 (0.9) | 2.9 (5.3) |
| 93 (200) | 1.3 (2.3) | 4.9 (8.8) |
| 150 (300) | 2.0 (3.6) | 7.5 (13.5) |
| 200 (400) | 2.6 (4.7) | 9.9 (17.9) |
| 260 (500) | 3.3 (5.9) | 12.4 (22.3) |

TABLE 3—ESSENTIAL DIMENSIONS OF FLASH TEST APPARATUS[A,B]

| | mm |
|---|---|
| Sample block: | |
| Block diameter | 61.5–62.5 |
| Sample well diameter | 49.40.49.70 |
| Sample well depth | 9.70–10.00 |
| Top of block to center of thermometer hole | 16.00–17.00 |
| Diameter of thermometer hole (approximate) | 7.00 |
| Cover: | |
| Large opening length | 12.42–12.47 |
| Large opening width | 10.13–10.18 |
| Small opening length | 5.05–5.10 |
| Small opening width | 7.60–7.65 |
| Distance between extreme edges of small openings | 48.37–48.32 |
| Filling orifice diameter | 4.00–4.50 |
| Bore or filler tube | 1.80–1.85 |
| Maximum distance of filler tube from base of well with cover closed (maximum) | 0.75 |
| Slide: | |
| Large opening length | 12.42–12.47 |
| Large opening width | 10.13–10.18 |
| Small opening length | 5.05–5.10 |
| Small opening width | 7.60–7.65 |
| Near edge of large opening to end of slide | 12.80–12.85 |
| Extremes of Large and small openings | 30.40–30.45 |
| Jet: | |
| Length of jet | 18.30–18.40 |
| External diameter at end of jet | 2.20–2.60 |
| Bore of jet | 1.60–1.65 |
| Height of jet center above top surface of cover | 11.00–11.20 |
| Jet pivot to center of block with cover closed | 12.68–12.72 |

[A] The O-seal or gasket, which provides a seal when the cover is shut, should be made of a heat-resistant material capable of withstanding temperatures up to 150°C for the low-range apparatus.

[B] When in position, the thermometer bulb should be surrounded with heat-conducting thermoplastic compound. (Heat Sink Compound Type DP 2023 supplied by Midland Silicone Ltd., and Part No. ISF-0013, Erdco Engineering Corp., Addison, Ill. 60101, are among the materials suitable for this purpose.)

5. Section 1500.46 is proposed to be revised as follows:

**§ 1500.46 Method for determining flashpoint of extremely flammable contents of self-pressurized containers.**

Use the apparatus described in § 1500.43. Use some means such as dry ice in an open container to chill the pressurized container. Chill the container, the flash cup, and the bath solution of the apparatus (brine or glycol may be used) to a temperature of about 25°F below zero. Puncture the chilled container to exhaust the propellant. Transfer the chilled formulation to the test apparatus and test in accordance with the method described in § 1500.43.

Interested persons are invited to submit written comments by August 24, 1984. Comments may be accompanied by written data, views, and arguments and should be addressed to the

Secretary, Consumer Product Safety Commission, Washington, D.C. 20207.

(15 U.S.C. 1261(1), 1269(a); 15 U.S.C. 2079(a))

Dated: April 16, 1984.

Sadye E. Dunn,

*Secretary, Consumer Product Safety Commission.*

Bibliography

1. Memorandum from the Bea Harwood, CPSC, to George Anikis, CPSC, "Injuries from Flammable Liquids", April 1, 1980.

2. Memorandum from Donald F. McCaulley, CPSC, to George Anikis, CPSC, "Briefing Package for Flash Point Changes in the FHSA." April 6, 1979.

3. Memorandum from Donald F. McCaulley, CPSC, to Stan Morrow, CPSC, "FHSA Flammability Test Revisions—Health Sciences Project Tasks," February 22, 1980.

4. Report, "Flammability Criteria Changes; Consumer Product Affected and Related Economic Impacts," by Donald C. Slivka and John J. Scarry, Battelle Columbus Division, February 27, 1980.

5. Memorandum from Julia Clones, CPSC, to Stan Morrow, CPSC "FHSA Test Method Changes, March 27, 1980.

6. Report, "Additional Evidence in Support of the Closed Cup Flash Point Method", Joseph M. Kuchta, U.S. Department of the Interior, June 18, 1970.

[FR Doc. 84-10570 Filed 4-25-84; 8:45 am]

BILLING CODE 6355-01-M

## DEPARTMENT OF HEALTH AND HUMAN SERVICES

### Food and Drug Administration

### 21 CFR Parts 182 and 184

[Docket No. 80N-0148]

### Hydrochloric Acid; Proposed Affirmation of GRAS Status as a Direct Human Food Ingredient

**AGENCY:** Food and Drug Administration.

**ACTION:** Proposed rule.

**SUMMARY:** The Food and Drug Administration (FDA) is proposing to affirm that hydrochloric acid is generally recognized as safe (GRAS) as a direct human food ingredient. The safety of this ingredient has been evaluated under a comprehensive safety review conducted by the agency.

**DATE:** Written comments by June 25, 1984.

**ADDRESS:** Written comments to the Dockets Management Branch (HFA-305), Food and Drug Administration, Rm. 4-62, 5600 Fishers Lane, Rockville, MD 20857.

**FOR FURTHER INFORMATION CONTACT:** Susan Thompson, Center for Food Safety and Applied Nutrition (formerly Bureau of Foods) (HFF-335), Food and Drug Administration, 200 C St. SW., Washington, D.C. 20204, 202-426-9463.

**SUPPLEMENTARY INFORMATION:** FDA is conducting a comprehensive review of human food ingredients classified as GRAS or subject to a prior sanction. The agency has issued several notices and proposals (see the Federal Register of July 26, 1973 (38 FR 20040)) initiating this review, under which the safety of hydrochloric acid has been evaluated. In accordance with the provisions of § 170.35 (21 CFR 17035), FDA proposes to affirm the GRAS status of this ingredient.

Hydrochloric acid is an aqueous solution of hydrogen chloride of varying concentrations. It is a clear to slightly yellowish, corrosive liquid having a pungent odor. It occurs in the gastric juice of animals. The gastric juice of man contains about 0.5 percent hydrochloric acid. It is produced industrially by the reaction of sodium chloride (NaCl) and sulfuric acid ($H_2SU_4$); by the reaction of sodium chloride (NaCl), sulfur dioxide ($SO_2$), air, and water vapor; and by the controlled combination of the elements hydrogen ($H_2$) and chlorine ($Cl_2$). Hydrochloric acid is used as a pH control agent, as a processing aid in the preparation of certain foods, and as a hydrolytic agent in the acid modification of foods such as starch. Foods to which hydrochloric acid has been added expose consumers predominantly to chloride ions and other chemical products resulting from its reaction with neutralizing agents or chemicals in the food. Thus, consumption is not of the acid per se but of the salts formed in the neutralization process. In most of its uses as a hydrolytic agent, the products of neutralization are removed.

In a regulation published in the Federal Register of January 31, 1961 (26 FR 938), FDA listed hydrochloric acid as GRAS as a miscellaneous or general purpose food ingredient with the limitation that it is used as a buffer or neutralizing agent. Subsequently, in a regulation published in the Federal Register of March 15, 1977 (42 FR 14640), FDA reclassified hydrochloric acid as a multiple purpose GRAS food substance, although the agency again included the limitation that it is used as a buffer and neutralizing agent. Hydrochloric acid is currently listed as GRAS for this use in § 182.1057 (21 CFR 182.1057). It is also regulated as a food additive in 21 CFR 172.892 as a substance that may be employed to acid-modify food starch and in 21 CFR 172.560 as a substance that may be used in the manufacture of modified hop extract. It is listed as an optional ingredient in the following food standards of identity: 21 CFR 131.111, acidified milk; 21 CFR 131.136, acidified lowfat milk; 21 CFR 131.144, acidified skim milk; 21 CFR 133.129, dry curd cottage cheese; 21 CFR 155.191, tomato paste; 21 CFR 155.192, tomato puree; and 21 CFR 155.194, catsup.

In 1971, the National Academy of Sciences/National Research Council (NAS/NRC) surveyed a representative cross-section of food manufacturers to determine the specific foods in which hydrochloric acid was used and the levels of usage. NAS/NRC combined this manufacturing information with information on consumer consumption of foods to obtain an estimate of consumer exposure to hydrochloric acid. The NAS/NRC survey revealed that hydrochloric acid is used as a pH control agent and as a processing aid in a variety of products, including baked goods, cheeses, gelatins, puddings, fillings, infant formulas, nonalcoholic beverages, plant protein products, processed fruits, and sweet sauces. The highest maximum use levels for hydrochloric acid are 0.29 percent as a processing aid and 0.43 percent as a pH control agent. Although the survey did not report the use of hydrochloric acid in tomato products (catsup, paste, and puree), on the basis of the published literature, the agency believes that these uses are very common. In 1970, the NAS/NRC survey indicated that approximately 64 million pounds (29 million kilograms) of hydrochloric acid were used by the food industry or 9.1 times that used in 1960. A more recent estimate, based on U.S. Department of Commerce data for total U.S. production of hydrochloric acid, in the Encyclopedia of Chemical Technology, 3d Ed., Vol. 12, is that 2,478,000 metric tons of hydrochloric acid were produced in the United States in 1979. Current estimates are that about 10 percent of this amount, or 500 million pounds of hydrochloric acid, is used by the food industry (Ref. 1).

The continuing increase in the amount of hydrochloric acid used is apparently the result of the growth of the high fructose corn syrup industry. The Corn Refiners Association states that the corn industry uses 305 million pounds of hydrochloric acid as a processing aid and 65 million pounds as a pH control agent.

Hydrochloric acid has been the subject of a search of the scientific literature from 1920 to 1974. The critieria used in the search were chosen to discover any articles that considered: (1) Chemical toxicity, (2) occupational hazards, (3) metabolism, (4) reaction products, (5) degradation products, (6)

carcinogenicity, teratogenicity, or mutagenicity, (7) dose response, (8) reproductive effects, (9) histology, (10) embryology, (11) behavioral effects, (12) detection, and (13) processing. A total of 505 abstracts on hyrochloric acid was reviewed, and 52 particularly pertinent reports from the literature survey have been summarized in a scientific literature review.

Information from the scientific literature review has been updated to 1979 and summarized in a report to FDA by the Select Committee on GRAS Substances (the Select Committee), which is composed of qualified scientists chosen by the Life Sciences Research Office of the Federation of American Societies for Experimental Biology (FASEB). The members of the Select Committee have carefully evaluated all the available safety information on hydrochloric acid.[1]

In the Select Committee's opinion:

> Hydrochloric acid in concentrated form is a strongly corrosive agent and the consequences of exposure to it are well-known. However, as it is used in food processing, or as a food additive to adjust the pH, hydrochloric acid is neutralized or buffered by the food to which it is added. Thus, human consumption is not of the acid, but of the chloride ion in the salts formed in the neutralization process. The small amounts of hydrchlroic acid that may persist in foods or drinks, would, in turn, be neutralized and buffered during ingestion and digestion, or after absorption. Hydrochloric acid is also a natural secretory product of the stomach of animals, including man (about 0.5 percent concentration in the gastric juice). The normal production of hydrochloric acid by the stomach exceeds manyfold the amounts that could be derived from foods.
>
> Animal experiments have not revealed untoward effects of hydrochloric acid consumption in amounts greatly exceeding those that can be reasonably expected to result from consumption of foods treated with hydrochloric acid.[2]

The Select Committee concludes that there is no evidence in the available information on hydrochloric acid that demonstrates, or suggests reasonable grounds to suspect, a hazard to the public when it is used at levels that are now current or that might reasonably be expected in the future.[3] Based on its own evaluation of the available information on hydrochloric acid, FDA concurs with this conclusion. Therefore, the agency concludes that no change in the current GRAS status of hydrochloric acid is justified and proposes to affirm hydrochloric acid as GRAS.

However, the agency is concerned about a recent change in the specifications for hydrochloric acid in the 3d edition of the Food Chemicals Codex (1981). The Food Chemicals Codex is a compilation of purity specifications for substances used as food ingredients developed by the Committee on Food Chemicals Codex of the National Academy of Sciences. The monograph for hydrochloric acid in the 1965 and 1972 editions of the Food Chemicals Codex contained a note that hydrochloric acid produced during the manufacture of chlorinated hydrocarbon insecticides is not considered food grade. In contrast, the 3d edition of the Food Chemcials Codex contains a note that does not prohibit the use of hydrochloric acid from this source. Instead, this note states that the manufacturer, vendor, or user is responsible for identifying specific organic contaminants and for establishing the suitability of the acid for its intended use.

The hydrochloric acid produced as a secondary product in the manufacture of certain organic compounds, including chlorinated hydrocarbon insecticides, is generally called "byproduct hydrochloric acid." Byproduct hydrochloric acid may contain undesirable contaminants. FDA has insufficient data to conclude on the basis of the information available that any byproduct hydrochloric acid is safe for use in food. FDA is concerned that the provision relaxing the Food chemicals Codex requirements for hydrochloric acid, together with the greatly increased use of this ingredient, may lead to the use in food of byproduct hydrochloric acid that contains significant residues of toxic and perhaps carcinogenic residues. Consequently, the agency is not proposing to affirm any byproduct hydrochloric acid as GRAS. FDA is proposing to affirm as GRAS only hydrochloric acid that is manufactured by the combination of hydrogen and chlorine, by the reaction of sodium chloride and sulfuric acid, or by the reaction of sodium chloride, sulfur dioxide, air, and water vapor. Hydrochloric acid produced by these methods must comply with the specifications of the 3d edition of the Food Chemicals Codex, excluding the note.

The agency is aware of efforts by the Committee on Food Chemicals Codex to replace the current note with definitive specifications for organic contaminants in hydrochloric acid. The agency will consider any new Food Chemicals Codex specifications as a comment on this proposal. Furthermore, FDA will review any data on byproduct hydrochloric acid that it receives in comments and will make any appropriate modifications in the final rule. In order for the agency to evaluate the use of a specific type of byproduct hydrochloric acid in food, it will be necessary to have a description of the manufacturing process from which the byproduct hydrochloric acid is derived, a list of the contaminants present, and their levels in the hydrochloric acid. Also, the agency will need information on the food categories to which the acid is added, the levels added, the levels of organic contaminants remaining in food, and the function of the acid in food.

Additionally, FDA is proposing not to include in the GRAS affirmation regulation for hydrochloric acid levels of use and the food categories reported in the 1971 NAS/NRC food survey for hydrochloric acid. Both FASEB and the agency have concluded that a large margin of safety exists for the use of hydrochloric acid in food, and that any reasonably foreseeable increase in the level of consumption of this substance will not adversely affect human health. Therefore, the agency is proposing to affirm the GRAS status of hydrochloric acid when it is used under current good manufacturing practice conditions of use in accordance with § 184.1(b)(1) (21 CFR 184.1(b)(1)). To make clear, however, that the GRAS status of this substance is based on the evaluation of currently known uses, the proposed regulation sets forth the technical effects that FDA evaluated.

Copies of the scientific literature review on hydrochloric acid and the report of the Select Committee are available for review at the Dockets Management Branch (address above) and may be purchased from the National Technical Information Service, 5285 Port Royal Rd., Springfield, VA 22161, as follows:

| Title | Order number | Price code | Price[1] |
|---|---|---|---|
| Hydrochloric acid (scientific literature review) | PB 241-962/AS | A04 | $9.00 |
| Hydrochloric acid (Select Committee report) | PB 301-399/AS | A02 | 6.00 |

[1] Price subject to change.

[1] "Evaluation of the Health Aspects of Hydrochloric Acid as a Food Ingredient," Life Sciences Research Office, Federal of American Societies for Experimental Biology, 1979, p. 11. In the past, the agency presented verbatim the Select Committee's discussion of the biological data it reviewed. However, because the Select Committee's report is available at the Dockets Management Branch and from the National Technicial Information Service, and because it represents a significant savings to the agency in publication cost, FDA has decided to discontinue presenting that discussion in the preambles to proposals that affirm GRAS status in accordance with current good manufacturing practice.

[2] *Ibid.*, p. 11.

[3] *Ibid.*, p. 11.

The format of this proposed regulation is different from that in previous GRAS affirmation regulations. FDA has modified paragraph (c) of § 184.1057 to make clear the agency's determination that GRAS affirmation is based upon current good manufacturing practice conditions of use, including the technical effects listed. This change has no substantive effect but is made merely for clarity.

This proposed action does not affect the current use of hydrochloric acid for pet food or animal feed.

Reference

The following information has been placed in the Dockets Management Branch (address above) and may be seen by interested persons between 9 a.m. and 4 p.m., Monday through Friday.

1. *Chemical Purchasing*, November 1981, pp. 59, 63.

The agency has determined under 21 CFR 25.24(d)(6) (proposed December 11, 1979; 44 FR 71742) that this proposed action is of a type that does not individually or cumulatively have a significant impact on the human environment. Therefore, neither an environmental assessment nor an environmental impact statement is required.

FDA, in accordance with the Regulatory Flexibility Act, has considered the effect that this proposal would have on small entities, including small businesses. This proposed rule may cause the price of nonbyproduct hydrochloric acid to increase when byproduct hydrochloric acid is no longer competing for food uses. This possible increase will not, however, cause the cost of this regulation to exceed the threshold for a significant economic impact. Therefore, FDA certifies in accordance with section 605(b) of the Regulatory Flexibility Act that no significant economic impact on a substantial number of small entities will derive from this action.

In accordance with Executive Order 12291, FDA has carefully analyzed the economic effects of this proposal and has determined that the final rule, if promulgated, will not be a major rule as defined by the Order.

The agency's findings of no economic impact and no significant impact on a substantial number of small entities, if the proposed rule is promulgated, and the evidence supporting these findings are contained in a threshold assessment which may be seen in the Dockets Management Branch (address above).

List of Subjects

*21 CFR Part 182*

General recognized as safe (GRAS) food ingredients, Spices and flavorings.

*21 CFR Part 184*

Direct food ingredients; Food ingredients, Generally recognized as safe (GRAS) food ingredients.

Therefore, under the Federal Food, Drug, and Cosmetic Act (secs. 201(s), 409, 701(a), 52 Stat. 1055, 72 Stat. 1784–1788 as amended (21 U.S.C. 321(s), 348, 371(a))) and under authority delegated to the Commissioner of Food and Drugs (21 CFR 5.10), it is proposed that Parts 182 and 184 be amended as follows:

## PART 182—SUBSTANCES GENERALLY RECOGNIZED AS SAFE

**§ 182.1057 [Removed]**

1. Part 182 is amended by removing § 182.1057 *Hydrochloric acid.*

## PART 184—DIRECT FOOD SUBSTANCES AFFIRMED AS GENERALLY RECOGNIZED AS SAFE

2. Part 184 is amended by adding new § 184.1057, to read as follows:

**§ 184.1057 Hydrochloric acid.**

(a) Hydrochloric acid (CAS Reg. No. 7647-01-0) is the chemical HCl. It is produced industrial by the reaction of sodium chloride (NaCl) and sulfuric acid ($H_2SO_4$); by the reaction of sodium chloride (NaCl), sulfure dioxide ($SO_2$), air, and water vapor; or by controlled combination of the elements hydrogen ($H_2$) and chlorine ($Cl_2$).

(b) The ingredient must not be byproduct hydrochloric acid and must meet the specifications of the Food Chemicals Codex, 3d Ed. (1981), p. 144, which is incorporated by reference. Copies are available from the National Academy Press, 2101 Constitution Ave. NW, Washington, DC 20418, or available for inspection at the Office of the Federal Register, 1100 L St. NW., Washington, DC 20408.

(c) In accordance with § 184.1(b)(1), the ingredient is used in food with no limitation other than current good manufacturing practice. The affirmation of this ingredient is generally recognized as safe (GRAS) as a direct human food ingredient is based on the following current good manufacturing practice conditions of use:

(1) The ingredient is used as a pH control agent as defined in § 170.3(o)(23) of this chapter and as a processing aid as defined in § 170.3(o)(24) of this chapter.

(2) The ingredient is used in food at levels not to exceed current good manufacturing practice.

The agency is unaware of any prior sanction for the use of this ingredient in food under conditions different from those identified in this document. Any person who intends to assert or rely on such a sanction shall submit proof of its existence in response to this proposal. The action proposed above will constitute a determination that excluded uses would result in adulteration of the food in violation of section 402 of the Federal Food, Drug, and Cosmetic Act (21 U.S.C. 342), and the failure of any person to come forward with proof of an applicable prior sanction in response to this proposal constitutes a waiver of the right to assert or rely on it later. Should any person submit proof of the existence of a prior sanction, the agency hereby proposes to recognize such use by issuing an appropriate regulation under Part 181 (21 CFR Part 181) or affirming it as GRAS under Part 184 or 186 (21 CFR Part 184 or 186), as appropriate.

Interested persons may, on or before June 25, 1984, submit to the Dockets Management Branch (address above) written comments regarding this proposal. Two copies of any comments are to be submitted, except that individuals may submit one copy. Comments are to be identified with the docket number found in brackets in the heading of this document. Received comments may be seen in the office above between 9 a.m. and 4 p.m., Monday through Friday.

Dated: April 6, 1984.

William F. Randolph,

*Acting Associate Commissioner for Regulatory Affairs.*

[FR Doc. 84-11198 Filed 4-25-84; 8:45 am]

BILLING CODE 4160-01-M

---

## DEPARTMENT OF TRANSPORTATION

## Federal Highway Administration

## 23 CFR Part 810

[FHWA Docket No. 84-7]

## Mass Transit and Special Use Highway Projects

**AGENCY:** Federal Highway Administration (FHWA), DOT.

**ACTION:** Notice of proposed rulemaking.

**SUMMARY:** The FHWA proposes to amend its regulation on mass transit and special use highway projects to incorporate statutory changes mandated by the Federal-Aid Highway Act of 1981 and the Surface Transportation

Assistance Act of 1982. Revisions are also made to update references to other regulations or statutes and to reflect administrative changes. The proposed revisions would provide the basic criteria for determining whether mass transit and special use highway projects are eligible for Federal-aid funding under 23 U.S.C. 137, 142, and 149.

**DATE:** Written comments are due on or before June 25, 1984.

**ADDRESS:** Submit written comments, preferably in triplicate, to FHWA Docket No. 84-7, Federal Highway Administration, Room 4205, HCC-10, 400 Seventh Street, SW., Washington, D.C. 20590. All comments received will be available for examination at the above address between 7:45 a.m. and 4:15 p.m. e.t., Monday through Friday. Those desiring notification of receipt of comments must include a self-addressed, stamped postcard.

**FOR FURTHER INFORMATION CONTACT:** James Carney, Office of Engineering, 202-426-0450 or Hugh T. O'Reilly, Office of the Chief Counsel, 202-426-0781, Federal Highway Administration, 400 Seventh Street, SW., Washington, D.C. 20590. Office hours are from 7:45 a.m. to 4:15 p.m. e.t., Monday through Friday.

**SUPPLEMENTARY INFORMATION:** The regulations implementing 23 U.S.C. 137, 142, and 149 as they relate to Federal-aid funding of mass transit and special use highway projects are contained in 23 CFR Part 810.

The Federal-Aid Highway Act of 1981 (Pub. L. 97-134, 95 Stat. 1699) (1981 Act) and the Surface Transportation Assistance Act of 1982 (Pub. L. 97-424, 96 Stat. 2097) (STAA of 1982) contain the following provisions which require revisions to 23 CFR Part 810.

Section 4 of the 1981 Federal-Aid Highway Act made high occupancy vehicle lanes (including approaches and all directly related facilities) and other construction features (including fringe and corridor parking lots) ineligible for Interstate construction funds unless they were included in the approved 1981 Interstate Cost Estimate. The 1981 Act specifically made the addition of travel lanes (including high occupancy vehicle lanes) eligible for Interstate Resurfacing, Restoration, Rehabilitation and Reconstruction (4R) funds which was interpreted to also include fringe and corridor parking facilities.

Section 118 of the STAA of 1982 amends 23 U.S.C. 137 to add language specifically allowing the use of funds apportioned under 23 U.S.C. 104(b)(5)(B) (Interstate Resurfacing, Restoration, Rehabilitation, and Reconstruction Funds) for fringe and corridor parking facilities.

Section 120 of the STAA of 1982 amends 23 U.S.C. 142 by adding shuttle service as an allowable item for inclusion in fees charged at federally funded fringe parking lots. Also, the term "high occupancy vehicle" was substituted for "buses" so as to allow facilities to be constructed with or without public mass transit involvement.

Section 163 of the STAA of 1982 establishes the requirement that if Federal funds are to be expended on physical construction or resurfacing of a highway that includes carpool lanes, such lanes must be open to use by motorcycles unless that use would create a safety hazard.

In addition to the statutory changes, other technical revisions are being proposed to update references to other regulations or laws or to reflect administrative changes.

## Discussion of Amendments

### *Subpart A—General*

(1) Section 810.4, *Definitions:*

A definition for "high occupancy vehicle" is being added to reflect the statutory requirement. The definition is based on principles articulated in the Manual on Uniform Traffic Control Devices (MUTCD) as well as on past experience. The term "high occupancy vehicle" is being substituted for the terms "bus" and "buses" wherever they appear. The definition of "fringe and transportation corridor parking facilities" is being revised by substituting the term "high occupancy vehicles" for the term "existing or planned public transportation facilities" to conform with language contained in the conference report for the STAA of 1982 (H.R. Rep. No. 987, 97th Cong., 2d Sess. 16, 125 (1982)). The report stated that projects may include eligible facilities for carpools and vanpools only, without the presence of buses or rail transit. The words "outside the central business district of an urban area" are inserted in the definition for "fringe and transportation corridor parking" thus eliminating the need for the "fringe area" definition. The definition for "nonhighway public mass transit project" is revised to include rehabilitation of passenger equipment and to reference Urban Mass Transportation Administration rules for eligibility. The definition of "Metropolitan Planning Organization" is being updated to coincide with 49 CFR 613 and 23 CFR 450, Planning Assistance Standards (June 30, 1983, 48 FR 30332). The definition for "responsible local official" is revised to be consistent with 49 CFR Part 613 and 23 CFR Part 450.

(2) Section 810.6, *Prerequisites for projects authorized by 23 U.S.C. 137, 142, or 149*—Paragraph (a) is revised to conform with the recently published planning regulations (June 30, 1983, 48 FR 30332). Paragraph (b) of the previous regulation is considered to be covered by the planning regulations and is omitted. Paragraph (d) is eliminated because the provision for full utilization of projects by public mass transportation systems was amended by the 1982 STAA to substitute high occupancy vehicles for public mass transportation systems. With this change the intent of proposed projects will be to provide full utilization and therefore the requirement is not necessary.

(3) Section 810.8, *Coordination*—This new section replaces references in §§ 810.108, 810.110, 810.208 and 810.310 with one general coordination requirement.

### *Subpart B—Highway Public Transportation Projects and Special Use Highway Facilities*

(1) Section 810.102, *Eligible projects*—The term "high occupancy vehicle" is being substituted for the terms "bus" and "buses" wherever they appear. The phrase "high occupancy vehicles" is being added to reflect the broadening of the program established by the STAA of 1982. The "and" between high occupancy vehicle and public mass transportation is being revised to "and/or" to clearly indicate a legislative intent to serve either type of system alone or together as the situation warrants. Also, the words "including rail" are added to paragraph (d) to clearly indicate that parking facilities can serve all types of mass transit systems.

(2) Section 810.104, *Applicability of other provisions*—This section is being revised to: substitute "high occupancy vehicle" for "bus;" reference the related projects for high occupancy and parking facilities under the carpool and vanpool program (23 CFR Part 656); reference the requirements for motorcycle use of carpool lanes established by the STAA of 1982; and to reference the restriction on the use of Interstate construction funds.

(3) Section 810.106, *Approval of fringe and transportation corridor parking facilities*—This section is being revised: to add language allowing parking fees to include shuttle service costs; to delete the language on public transportation involvement since it will be optional; and to add criteria for establishing which Federal-aid funds can participate.

(4) Section 810.108, *Designation of existing facilities*—The former section concerning coordination with the Urban Mass Transportation Administrator has been incorporated into § 810.8. This new section parallels 23 CFR Part 656 so there will be consistent treatment of similar projects using the same class of construction funds.

(5) Section 810.110, *Notification*—This section has been incorporated into § 810.8 and is eliminated.

*Subpart C—Making Highway Rights-of-Way Available for Mass Transit Projects*

(1) Section 810.208, *Action by the Federal Highway Administrator*—The consultation with the Urban Mass Transportation Administrator is removed from this section and incorporated into § 810.8.

(2) Section 810.210, *Authorization for use and occupancy by mass transit*—A reference to Attachment N of OMB Circular A-102 is added to control disposition of facilities abandoned on highway rights-of-way.

*Subpart D—Federal-Aid Urban System Nonhighway Public Mass Transit Projects*

(1) Section 810.300, *Purpose*—Reference to 23 U.S.C. 142(c) is deleted since the funding has expired.

(2) Section 810.304, *Submission of projects*—The reference to plans, specifications and estimates has been eliminated and the reference to Urban Mass Transportation Administration application procedures updated. Language has been added requiring information concerning the 40 percent reservation of funds for resurfacing, restoration, rehabilitation, and reconstruction projects.

(3) Section 810.306, *Reservation of funds*—Paragraph (a) has been consolidated and in paragraph (b) the reference to local officials changed to "responsible local officials" to match the definition in § 810.4.

(4) Section 810.308 *Approval of urban system nonhighway public mass transit projects*—The reference to Urban Mass Transportation Administration procedures has been updated.

(5) Section 810.310, *Applicability of other provisions*—The former section concerning coordination with the Urban Mass Transportation Administrator has been incorporated into § 810.8. This new section establishes the Federal share payable as equal to a highway project under 23 U.S.C. 120(a).

The FHWA has determined that this document is neither a major proposed rule under Executive Order 12291 nor a significant proposed regulation under DOT regulatory procedures. The economic impact of this rulemaking has been found to be minimal. The proposed revisions are more in the nature of technical and terminology amendments and are generally incorporating statutory requirements. Accordingly, a full regulatory evaluation is not required. For this reason and under the criteria of the Regulatory Flexibility Act, it is certified that this action, if promulgated, will not have a significant economic impact on a substantial number of small entities. (Catalog of Federal Domestic Assistance Program Number 20.205, Highway Research, Planning, and Construction. The regulations implementing Executive Order 12372 and former OMB Circular A-95 regarding intergovernmental consultation on Federal programs and activities apply to this program.)

**List of Subjects in 23 CFR Part 810**

Grant program—transportation, Highways and roads, Mass transportation, Parking.

In consideration of the foregoing, the FHWA hereby proposes to amend title 23, Code of Federal Regulations, by revising Part 810 to read as set forth below.

Issued on: April 18, 1984.

R. A. Barnhart,

*Federal Highway Administrator.*

Part 810 is revised to read as follows:

## PART 810—MASS TRANSIT AND SPECIAL USE HIGHWAY PROJECTS

**Subpart A—General**

Sec.
810.2 Purpose.
810.4 Definitions.
810.6 Prerequisites for projects authorized by 23 U.S.C. 137, 142, or 149.
810.8 Coordination.

**Subpart B—Highway Public Transportation Projects and Special Use Highway Facilities**

810.100 Purpose.
810.102 Eligible projects.
810.104 Applicability of other provisions.
810.106 Approval of fringe and transportation corridor parking facilities.
810.108 Designation of existing facilities.

**Subpart C—Making Highway Rights-of-Way Available for Mass Transit Projects**

810.200 Purpose.
810.202 Applicability.
810.204 Application by mass transit authority.
810.206 Review by the State Highway Agency.
810.208 Action by the Federal Highway Administrator.
810.210 Authorization for use and occupancy by mass transit.
810.212 Use to be without charge.

**Subpart D—Federal-Aid Urban System Nonhighway Public Mass Transit Projects**

810.300 Purpose.
810.302 Eligible projects.
810.304 Submission of projects.
810.306 Reservation of funds.
810.308 Approval of urban system nonhighway public mass transit projects.
810.310 Applicability of other provisions.

Authority: 23 U.S.C. 137, 142, 149 and 315; sec. 4 of Pub. L. 97-134, 95 Stat. 1699; secs. 118, 120, and 163 of Pub. L. 97-424, 96 Stat. 2097; 49 CFR 1.48(b) and 1.51(f).

### Subpart A—General

**§ 810.2 Purpose.**

The purpose of this regulation is to implement section 137, 142, and 149 of title 23, U.S.C.

**§ 810.4 Definitions.**

(a) Except as otherwise provided terms defined in 23 U.S.C. 101(a) are used in this subpart as so defined.

(b) The following terms, where used in the regulations in this subpart have the following meanings:

(1) Exclusive or preferential high occupancy vehicle, truck, or emergency vehicle lane(s)—one or more lanes of a highway facility or an entire highway facility where high occupancy vehicles, trucks or emergency vehicles or any combination thereof, are given, at all times or at any regularly scheduled times, a priority or preference over some or all other vehicles moving in the general stream of mixed highway traffic. Carpool lane(s)—is any high occupancy vehicle lane which allows use by carpools.

(2) Fringe and transportation corridor parking facilities—those facilities located outside the central business district of an urban area which are intended to be used for the temporary storage of vehicles and which are located and designed so as to facilitate the safe and convenient transfer of persons traveling in such vehicles to and from high occupancy vehicles and/or public mass transportation systems. The term "parking facilities" includes but is not limited to access roads, buildings, structures, equipment, improvements and interests in land.

(3) High occupancy vehicle—a bus or other motorized passenger vehicle used for ridesharing purposes and occupied by a specified minimum number of persons.

(4) Highway traffic control devices—traffic control devices as defined by the currently approved "Manual on Uniform Traffic Control Devices for Streets and Highway." [1]

[1] The MUTCD is incorporated by reference at 23 CFR 625.3.

(5) Metropolitan Planning Organization—that organization designated as being responsible, together with the State, for carrying out the provisions of 23 U.S.C. 134, as required by 23 U.S.C. 104(f)(3), and capable of meeting the requirements of sections 3(e)(1), 5(1), 8 (a) and (c) and 9(e)(3)(G) of the Urban Mass Transportation Act of 1964, as amended, 49 U.S.C. 1602(e)(1), 1604(1), 1607 (a) and (c) and 1607a(e)(3)(G). This organization shall be the forum for cooperative transportation decisionmaking.

(6) Nonhighway public mass transit project—a project to develop or improve public mass transit facilities or equipment. A project need not be physically located or operated on a route designated as part of the Federal-aid urban system, but must be included in and related to a program for the development or improvement of an urban public mass transit system which includes either the construction of fixed rail facilities, or the purchase or rehabilitation of passenger equipment, or both. Passenger equipment includes buses, fixed rail rolling stock and other transportation equipment eligible under 49 U.S.C. 1602.

(7) Passenger loading areas and facilities (including shelters)—areas and facilities located at or near passenger loading points for safety, protection, comfort, or convenience of high occupancy vehicle passengers. The term "areas and facilities" includes but is not limited to access roads, buildings, structures, equipment, improvements, and interest in land.

(8) Responsible local officials—(i) In areas under 50,000 population, the principal elected officials of general purpose local governments; or (ii) In urbanized areas, the principal elected officials of general purpose local governments acting through the Metropolitan Planning Organization.

### § 810.6 Prerequisites for projects authorized by 23 U.S.C. 137, 142, or 149.

(a) Projects in or serving an urbanized area must be based on a continuing comprehensive transportation planning process, carried on in accordance with 23 U.S.C. 134 as prescribed in 23 CFR Part 450, Subpart A and included in the transportation improvement program required by 23 CFR Part 450, Subpart B.

(b) All proposed projects must be included in a program of projects approved pursuant to 23 CFR Part 630, Subpart A (Federal-Aid Programs Approval and Authorization).

### § 810.8 Coordination.

The Federal Highway Administrator and the Urban Mass Transportation Administrator shall coordinate with each other on any projects involving public mass transit to facilitate project selection, approval and completion.

## Subpart B—Highway Public Transportation Projects and Special Use Highway Facilities

### § 810.100 Purpose.

The purpose of the regulations in this subpart is to implement 23 U.S.C. 137, 142(a)(1), 142(b), and 149, which authorize various highway public mass transportation improvements and special use highway facilities as Federal-aid highway projects

### § 810.102 Eligible projects.

Under this subpart the Federal Highway Administrator may approve on any Federal-aid system projects which facilitate the use of high occupancey vehicles and public mass transportation systems so as to increase the traffic capacity of the Federal-aid system for the movement of persons. Eligible projects include:

(a) Construction of exclusive or preferential high occupancy vehicle, truck, or emergency vehicle lanes, except the construction of exclusive or preferential lanes limited to use by emergency vehicles can be approved only on the Federal-aid Interstate System;

(b) Highway traffic control devices;

(c) Passenger loading areas and facilities (including shelters) that are on or serve a Federal-aid system; and

(d) Construction or designation of fringe and transportation corridor parking facilities to serve high occupancy vehicles and/or public mass transportation systems, including rail.

### § 810.104 Applicability of other provisions.

(a) Projects authorized under § 810.102 shall be deemed to be highway projects for all purposes of title 23, U.S.C., and shall be subject to all regulations of title 23, CFR.

(b) Projects approved under this subpart on the Federal-aid Interstate System for exclusive or preferential high occupancy vehicle, truck, and emergency vehicle lanes are excepted from the minimum four-lane requirement of 23 U.S.C. 109(b).

(c) Exclusive or preferential lanes on the Interstate System, including approaches and directly related facilities, can be constructed with Interstate construction funds only if they were approved in the 1981 Interstate Cost Estimate.

(d) The Federal proportional share of a project approved under this subpart shall be the same as that provided in 23 U.S.C. 120 for any other project on the Federal-aid system on which the project is located or which it serves. The Federal share for Interstate substitution projects is 85 percent except for signalization projects for which the Federal share may be up to 100 percent.

(e) As required by Section 163 of the Surface Transportation Assistance Act of 1982, approval of Federal-aid for a physical construction or resurfacing project having a carpool lane(s) within the project limits may not be granted unless the project allows the use of the carpool lane(s) by motorcycles or such use is certified by the State as creating a safety hazard. This requirement does not apply to high occupancy vehicle lanes which exclude carpools.

(f) Certain projects for designation of existing lanes or parking facilities to serve carpools and vanpools are authorized under 23 U.S.C. 146. The regulations for these projects are in 23 CFR Part 656 and FHPM 6-8-2-3, Carpool and Vanpool Program.

### § 810.106 Approval of fringe and transportation corridor parking facilities.

(a) In approving fringe and transportation corridor parking facilities, the Federal Highway Administrator:

(1) Shall make a determination that the proposed parking facility is located outside the central business district of the urban area;

(2) May approve acquisition of land proximate to the right-of-way of a Federal-aid highway;

(3) May approve construction of publicly-owned parking facilities on land within the right-of-way of any Federal-aid highway, including the use of the airspace above and below the established gradeline of the highway pavement, and on land, acquired with or without Federal-aid funds which is not within the right-of-way of any Federal-aid highway but which was acquired in accordance with the Uniform Relocation Assistance and Land Acquisition Policies Act of 1970 (84 Stat. 1894, 42 U.S.C. 4601 et seq.);

(4) May permit the charging of fees for the use of the facility, except that the rate of the fee shall not be in excess of that required for maintenance and operation and the cost of providing shuttle service to and from the facility (including compensation to any person for operating such facility and for providing such shuttle service);

(5) Shall determine that the State, or the political subdivision thereof, where the project is to be located, or any agency or instrumentality of such State or political subdivision, has the

authority and capability of constructing, maintaining, and operating the facility;

(6) Shall receive assurance from the State that the facility will remain in public ownership as long as the facility is needed and that any change in ownership shall have prior FHWA approval;

(7) Shall enter into an agreement with the State, political subdivision, agency, or instrumentality governing the financing, maintenance, operation of the parking facility; and

(8) Shall approve design standards for constructing the facility as developed in cooperation with the State highway agency.

(b) A State political subdivision, agency, or instrumentality thereof may contract with any person to operate any parking facility constructed under this section.

(c) In authorizing projects involving fringe and transportation corridor parking facilities, the following criteria should be used in establishing which Federal-aid system funds can participate:

(1) Pursuant to 23 U.S.C. 137, urban system funds for projects serving the urban area and Interstate resurfacing, restoration, rehabilitation and reconstruction funds within Interstate corridors, or

(2) Pursuant to 23 U.S.C. 142, Federal-aid highway funds (i.e., primary, secondary, urban and Interstate resurfacing, restoring, rehabilitating and reconstructing) as applicable to the Federal-aid system that substantially benefits. The benefiting systems are those which will or otherwise would carry the passengers of the parked vehicles to their destination, or

(3) Interstate construction funds may be used only where the parking facility was approved in the 1981 Interstate Cost Estimate and is constructed in conjunction with a high occupancy vehicle lane approved in the 1981 Interstate Cost Estimate.

### § 810.108 Designation of existing facilities.

(a) In accordance with the provisions of 23 CFR 810.102, the Federal Highway Administrator may approve on any Federal-aid system the work necessary to designate existing parking facilities (such as at shopping centers or other public or private locations) or fringe and transportation corridor parking.

(1) Eligible activities include the acquisition of or the initial and renewal costs for leasing existing parking space, signing of and modifications to existing facilities, trail blazer signs, and passenger loading areas and facilities.

(2) The approval criteria in 23 CFR 810.106 (a)(1), (4) (5), (7) and (8) apply to these parking facilities.

(b) In accordance with the provisions of 23 CFR 810.102, the Federal Highway Administrator may approve on any Federal-aid system the work necessary to designate existing highway lanes as high occupancy vehicle lanes.

(1) Eligible activities include preliminary engineering, signing, pavement marking, traffic control devices, minor physical modifications and initial inspection or monitoring of use.

(2) Such improvements may be approved on any public road if they facilitate more efficient use of any Federal-aid highway.

(c) Interstate construction funds may be used only where the proposed projects were approved in the 1981 Interstate Cost Estimate.

## Subpart C—Making Highway Rights-of-Way Available for Mass Transit Projects

### § 810.200 Purpose.

The purpose of this subpart is to implement 23 U.S.C. 142(g), which permits the Federal Highway Administrator to authorize a State to make available to a publicly-owned mass transit authority existing highway rights-of-way for rail or other non-highway public mass transit facilities.

### § 810.202 Applicability

(a) The provisions of this subpart are applicable to the rights-of-way of all Federal-aid highways in which Federal-aid highway funds have participated or will participate in any part of the cost of the highway.

(b) The provisions of this subpart do not preclude acquisition of rights-of-way for use involving mass transit facilities under the provisions of Subparts B and D of this part. Rights-of-way made available under this Subpart may be used in combination with rights-of-way acquired under Subparts B and D of this part.

### § 810.204 Application by mass transit authority.

A publicly-owned mass transit authority desiring to utilize land existing within the publicly acquired right-of-way of any Federal-aid highway for a rail or other nonhighway public mass transit facility may submit an application therefor to the State highway agency.

### § 810.206 Review by the State Highway Agency.

The State highway agency, after reviewing the application, may request the Federal Highway Administrator to authorize the State to make available to the publicly-owned mass transit authority the land needed for the proposed facility. A request shall be accompanied by evidence that utilization of the land for the proposed purposes will not impair future highway improvement or the safety of highway users.

### § 810.208 Action by the Federal Highway Administrator.

The Federal Highway Administrator may authorize the State to make available to the publicly-owned mass transit authority the land needed for the proposed facility, if it is determined that:

(a) The evidence submitted by the State highway agency under § 810.206 is satisfactory;

(b) The public interest will be served thereby; and

(c) The proposed action in urbanized areas is based on a continuing comprehensive transportation planning process carried on in accordance with 23 U.S.C. 134 as described under 23 CFR Part 450, Subpart A.

### § 810.210 Authorization for use and occupancy by mass transit.

(a) Upon being authorized by the Federal Highway Administrator, the State shall enter into a written agreement with the publicly-owned mass transit authority relating to the use and occupancy of highway right-of-way subject to the following conditions:

(1) That any significant revision in the design, construction, or use of the facility for which the land was made available shall receive prior review and approval by the State highway agency.

(2) The use of the lands made available to the public-owned mass transit authority shall not be transferred to another party without the prior approval of the State highway agency.

(3) That, if the publicly-owned mass transit authority fails within a reasonable or agreed time to use the land for the purpose for which it was made available, or if it abandons the land or the facility developed, such use shall terminate and any abandoned facility developed or under development by the publicly-owned mass transit authority which was financed all or in part with Federal funds shall be disposed of in a manner prescribed by OMB Circular A-102, Attachment N.

(b) A copy of the use and occupancy agreement and any modification under paragraphs (a) (1), (2), and (3) of this section shall be forwarded to the Federal Highway Administrator.

§ 810.212 Use to be without charge.

The use and occupancy of the lands made available by the State to the publicly-owned transit authority shall be without charge. Cost incidental to making the lands available for mass transit shall be borne by the publicly-owned mass transit authority.

## Subpart D—Federal-Aid Urban System Nonhighway Public Mass Transit Projects

§ 810.300 Purpose.

The purpose of this subpart is to implement 23 U.S.C. 142(a)(2), which allows the Urban Mass Transportation Administrator, by delegation of the Secretary, to approve nonhighway public mass transit projects as Federal-aid urban system projects.

§ 810.302 Eligible projects.

(a) Eligible projects are those defined as nonhighway public mass transit projects in § 810.4 of this part subject to the limitation in paragraph (b) of this subject.

(b) All projects under this subpart for the construction, reconstruction, or improvement of fixed rail facilities shall be located within the urban boundaries established under 23 U.S.C. 101(a).

§ 810.304 Submission of projects.

(a) An application for an urban system nonhighway public mass transit project shall be developed by a public body as defined under the UMTA Discretionary Capital Assistance program and shall be prepared in accordance with procedures for the same Discretionary Capital Assistance program.

(b) The application shall be submitted concurrently to the State highway agency and to the UMTA Administrator. The State highway agency, if it concurs, shall submit a request to the FHWA Administrator for a reservation of apportioned Federal-aid urban system funds. This request shall include information as to the effect of the statutory requirement that 40 percent of Federal-aid urban system funds be expended on projects for resurfacing, restoring, rehabilitating and reconstructing existing highways. If the State has certified that the 40 percent is in excess of its needs, this should be included.

§ 810.306 Reservation of funds.

(a) The FHWA Administrator shall review the State request, determine whether sufficient Federal-aid urban system funds are available, and notify the State highway agency and the UMTA Administrator of the reservation of funds.

(b) The apportioned funds reserved for the proposed project under paragraph (a) of this section shall remain available for obligation unless the FHWA Administrator is notified that the application has been disapproved by the UMTA Administrator, or unless the responsible local officials in whose jurisdiction the project is to be located and the State highway agency jointly request the withdrawal of the project application.

§ 810.308 Approval of urban system nonhighway public mass transit projects.

(a) An urban system public mass transit project may be approved by the UMTA Administrator when it is determined that:

(1) The application and project are in accordance with the current UMTA procedures relating to discretionary capital assistance grants; and

(2) Notification has been received from the FHWA Administrator that sufficient apportioned Federal-aid urban system funds are available to finance the Federal share of the cost of the proposed project.

(b) Approval of the plans, specifications, and estimates of a nonhighway public mass transit project shall be deemed to occur on the date the UMTA Administrator approves the project application. This approval which is subject to the availability of obligation authority at the time of approval, will obligate the United States to pay its proportional share of the cost of the project.

(c) Upon approval of an urban system nonhighway public mass transit project, the UMTA Administrator will execute a grant contract covering implementation of the project.

§ 810.310 Applicability of other provisions.

The Federal proportional share of the cost of an urban system nonhighway public mass transit project approved under this subpart shall be equal to the Federal share which would have been paid if the project were a highway project, as determined under 23 U.S.C. 120(a).

[FR Doc. 84-11190 File 4-25-84; 8:45 am]

BILLING CODE 4910-22-M

## DEPARTMENT OF THE TREASURY

## Internal Revenue Service

## 26 CFR Part 1

## Accelerated Cost Recovery System

*Correction*

In FR Doc. 84-3922 beginning on page 5940 in the issue of Thursday, February 16, 1984, make the following corrections:

1. On page 5944, in the table headed "Class of property—Recovery periods", in the second column, "Do" should read "15, 35, or 45 years".

2. On page 5945, in the first table in the second column, in the entry for "31", under the heading "1-2", "3" should read "2"; and in the entry for "36", under the heading "1-2", remove the figure "2" and insert a blank line.

3. On page 5946, in the first column, in the first example, the 17th and 18th lines should read: "(10,000 x .70) x .38) and in 1983 equals $1,110 (i.e., "($10,000 x .30) x .37). If A continues to use the".

4. On page 5947, in the second column, Example (4), lines nine, ten, and eleven, remove "The improvement as were used for the underlying building."

5. On page 5949, in the first, left-hand table on the page, in the entry for "2", under the heading "8", "23" should read "22".

6. Also on page 5949, in the middle table at the bottom of the page, in the entry for "33", under the headings "35", "45", and "50", "3" should read "2" in each column.

7. On page 5950, in the table at the top of the first column, under the heading "Recovery period", in the first entry, remove "or present class life."

8. On page 5951, in the table at the top left of the page, in the entry for "22", under the heading "22", "2" should read "4"; and in the entry for "23", under the heading "22", the blank should read "2".

9. On page 5952, in the first column, in the 24th line, insert the following after "section": "168(f)(5) and paragraph (f) of this section".

10. On page 5955, in the third column, in Example (3), in the table, in the third line, "allowable" should read "allowance".

11. On page 5957, in the third column, paragraph (v), in the third line, insert "utility" after "public".

12. On page 5960, in the first column, in the 29th line from the bottom, "base" should read "basis".

13. On page 5962, in the first column, Example (10), eighth line, "Partner B" should read "Partner F".

14. Also on page 5962, in the third column, Example (19), the 22nd line

should read: "business purpose (or purposes) for the transaction is (or are) demonstrated, the property will not be".

15. On page 5965, in the first column, Example (1), the 29th line should read: "(11/12 x .37) x $12,000) under section 168 (f)(10)(A)".

16. Also on page 5965, in the third column, Example (5), the sixth line should read "deduction is $15,000 (*i.e.*, .15 x $100,000), and for 1982 is $9,166.67 (*ie.*, $100,000 x .22 x 5/12)."

17. On page 5966, in the first column, in the 19th line, "$33,000" should read "$33,300".

18. Also on page 5966, in the third column, the 11th line should read: "respect to such excess as are used for the building, unless such excess would qualify as".

19. On page 5967, in the first column, the fourth line from the bottom should read: "basis in the reacquired property which exceeds E's adjusted basis at the time of disposition (*i.e.*, $4,525), E".

20. Also on page 5967, in the third column, paragraph (vi), in the first line, "Section 168(b)" should read "Section 168(f)".

BILLING CODE 1505-01-M

## DEPARTMENT OF LABOR

### Employment Standards Administration Wage and Hour Division

### 29 CFR Part 530

### Employment of Homeworkers in Certain Industries; Extension of Comment Period

**AGENCY:** Employment Standards Administration, Wage and Hour Division, Labor.

**ACTION:** Proposed rule; extension of comment period.

**SUMMARY:** This document extends the period for filing written comments regarding the proposed rule removing the prohibition against homework in the knitted outerwear industry under 29 CFR 530.1(f) and 530.2, the text of which appeared in the July 1, 1981, edition of the Code of Federal Regulations (see Appendix A to 49 FR 11786, at 11790, March 27, 1984). This action is taken in order to provide interested parties with additional time to submit their comments.

**DATE:** Comments must be received on or before May 11, 1984.

**ADDRESS:** Send written comments to William M. Otter, Administrator, Wage and Hour Division, Employment Standards Administration, Room S-3502, U.S. Department of Labor, 200 Constitution Avenue, NW., Washington, D.C. 20210.

**FOR FURTHER INFORMATION CONTACT:** Herbert J. Cohen, Deputy Administrator, Wage and Hour Division, Employment Standards Administration, Room S-3502, U.S. Department of Labor, 200 Constitution Aveue, NW., Washington, D.C. 20210. Telephone: 202-523-8305. This is not a toll-free number.

**SUPPLEMENTARY INFORMATION:** In the Federal Register of March 27, 1984 (49 FR 11786), the Department of Labor published a notice of proposed rulemaking concerning the employment of homeworkers in the knitted outerwear industry. Interested parties were requested to submit comments on or before April 26, 1984.

Because of the interest in this matter and requests for further time for comments by various parties, the Department has decided to extend the comment period for fifteen days.

Therefore, the comment period for submitting information concerning the employment of homeworkers in the knitted outerwear industry is extended to May 11, 1984.

Signed at Washington, D.C. this 24th day of April, 1984.

William M. Otter,

*Administrator, Wage and Hour Division.*

[FR Doc. 84-11487 Filed 4-25-84; 8:45 am]

BILLING CODE 4510-27-M

## DEPARTMENT OF THE INTERIOR

### Office of Surface Mining Reclamation and Enforcement

### 30 CFR Part 938

### Consideration of Amendments to the Pennsylvania Permanent Program Under the Surface Mining Control and Reclamation Act of 1977

**AGENCY:** Office of Surface Mining Reclamation and Enforcement (OSM), Interior.

**ACTION:** Reopening of public comment period.

**SUMMARY:** OSM is reopening the period for review and comment on certain amendments submitted by the Commonwealth of Pennsylvania to its program for the regulation of surface coal mining and reclamation in the State. The amendments relate to Pennsylvania's procedure for extending the time to abate a violation in excess of 90 days. OSM is reopening the comment period to allow the public sufficient time to reconsider and comment on the proposed amendments.

**DATES:** Written comments, data or other relevant information must be received on or before 4:00 p.m. May 11, 1984 to be considered. Comments submitted after this date may not necessarily be considered.

**ADDRESS:** Comments should be sent or hand-delivered to: Robert Biggi, Director, Harrisburg Field Office, Office of Surface Mining, 101 South 2d Street, Harrisburg, Pennsylvania 17101.

**FOR FURTHER INFORMATION CONTACT:** Robert Biggi, Director, Harrisburg Field Office, Office of Surface Mining, 101 South 2d Street, Harrisburg, Pennsylvania 17101; Telephone (717) 782-4036.

**SUPPLEMENTARY INFORMATION:** On November 1, 1983, OSM received, pursuant to the 30 CFR 732.17 State program amendment procedures, revised regulations intended to satisfy certain conditions of the Secretary's approval of the Pennsylvania regulatory program. On December 1, 1983, OSM published a notice in the Federal Register announcing receipt of the amendments to the Pennsylvania program and inviting public comment thereon (48 FR 54251-54253). The public comment period ended January 3, 1984. The public hearing scheduled for December 27, 1983, was not held because no one expressed a desire to present testimony.

On April 3, 1984, OSM received additional material from Pennsylvania pertaining to condition (j)(1). This material consists of a new policy statement pertaining to extended abatement periods.

OSM is reopening the comment period for an additional 15 days to allow the public sufficient time to review and comment on the above Pennsylvania amendments. Written comments should be specific, pertain only to the issues proposed in this rulemaking and include explanations of why the commenter believes or does not believe that the proposed amendment includes the same or similar procedural requirements as provided in 30 CFR Part 843.12.

This announcement is made in keeping with OSM's commitment to public participation as a vital component in fulfilling the purposes of the Surface Mining Control and Reclamation Act of 1977.

**List of Subjects in 30 CFR Part 938**

Intergovernmental relations, Surface mining, Underground mining.

Authority: Pub. L. 95-87, Surface Mining Control and Reclamation Act of 1977 (30 U.S.C. 1201 et seq.)

Dated: April 20, 1984.

William B. Schmidt,

*Assistant Director, Program Operations and Inspection.*

[FR Doc. 84-11292 File 4-25-84; 8:45 am]

BILLING CODE 4310-05-M

---

30 CFR Part 946

## Public Comment Procedures and Opportunity for Public Hearing on Proposed Amendment to the Virginia Permanent Regulatory Program

**AGENCY:** Office of Surface Mining Reclamation and Enforcement (OSM), Interior.

**ACTION:** Proposed rule.

**SUMMARY:** OSM is announcing procedures for a public comment period and for requesting a public hearing on the substantive adequacy of a program amendment submitted by Virginia as an amendment to the State's permanent regulatory program (hereinafter referred to as the Virginia program) under the Surface Mining Control and Reclamation Act of 1977 (SMCRA). The amendment consists of proposed changes ot the Virginia statute and regulations concerning blaster training and certification.

This notice sets forth the times and locations that the Virginia program and proposed amendment will be available for public inspection, the comment period during which interested persons may submit written comments on the proposed amendment, and the procedures that will be followed for the public hearing.

**DATES:** Written comments from the public not received by 4:30 p.m., May 25, 1984 will not necessarily be considered in the decision on whether the proposed amendment should be approved and incorporated into the Virginia regulatory program. A public hearing on the proposed amendment will be held only if requested. If no one requests a public hearing, none will be held. If only one person requests a public hearing, a public hearing meeting, rather than a hearing, may be held and the results of the meeting included in the Administrative Record. If a hearing is requested and scheduled, a notice announcing the time and location of the hearing will be announced in the Federal Register. Requests for a public hearing should be directed to Mr. Ralph Cox at the address or telephone number listed below by 4:00 p.m., May 11, 1984.

**ADDRESSES:** Written comments and requests for a hearing should be directed to Mr. Ralph Cox, Field Office Director, Big Stone Gap Field Office, Office of Surface Mining, P.O. Box 626, Big Stone Gap, Virginia 24219; Telephone: (703) 523-4303.

Copies of the Virginia program, the proposed modifications to the program, a listing of any scheduled public meetings, and all written comments received in response to this notice will be available for public review at the OSM Field Office listed above and at the OSM offices and the office of the State regulatory authority listed, below, during normal business hours Monday through Friday, excluding holidays.

Office of Surface Mining Reclamation and Enforcement, 1100 "L" Street, N.W., Room 5124, Washington, D.C. 20240.

Office of Surface Mining Reclamation and Enforcement, Highway 23, South, Big Stone Gap, Virginia 24219

Office of Surface Mining Reclamation and Enforcement, Flannagan and Carroll Streets, Lebanon, Virginia 24266.

Virginia Division of Mined Land Reclamation, 622 Powell Avenue, Drawer U, Big Stone Gap, Virginia 24219.

**FOR FURTHER INFORMATION CONTACT:** Ralph Cox, Director, Big Stone Gap Field Office, Office of Surface Mining, P.O. Box 626, Big Stone Gap, Virginia 24219, Telephone: (703) 523-4303.

**SUPPLEMENTARY INFORMATION:**

### I. Background

The Virginia program was conditionally approved by the Secretary of the Interior on December 15, 1981 (46 FR 61088-61115). Information pertinent to the general background, revisions, modifications, and amendments to the proposed permanent program submission, as well as the Secretary's findings, the disposition of comments and a detailed explanation of the conditions of approval of the Virginia program can be found in the December 15, 1981 Federal Register.

### II. Submission of Revisions

By letter dated April 11, 1984, Virginia submitted proposed statute and regulations and other material which would establish requirements for the training and certification of blasters working in surface coal mining operations. The proposed modifications include:

- House Bill Number 144
- Regulations:
- Sections V816.61 and V817.61 (Use of explosives; General Requirements)
- Subchapter VM (Training, Examination, and Certification of Blasters)
- Memorandum of agreement. between the Virginia Department of Conservation and Economic Development and the Virginia Department of Labor and Industry
- Flow chart for blaster's certification
- Form CP-180 "DMLR Application for Endorsement of Coal Surface Mining Operations Blaster's Certification"
- Form BOE-1 "Application for Examination for Certification"
- Form BOE-2 "Certification of Work Experience"
- Division of Mines and Quarries booklet "Rules and Regulations Governing Surface Mining Operations"

At the time of the Secretary's approval of the Virginia program, OSM had not yet promulgated Federal rules governing the training and certification of blasters. Therefore, the State was not required to include such requirements in its program. However, in the notice announcing conditional approval of the Virginia program, the Secretary specified that Virginia would be required to adopt such provisions following promulgation of the Federal standards (46 FR 61098, December 15, 1981).

On March 4, 1983, OSM issued final rules effective April 14, 1983, establishing the Federal standards for the training and certification of blasters at 30 CFR Chapter M (48 FR 9486). OSM is seeking comment on whether the Virginia proposed modifications are no less effective than the Federal regulations and satisfy the criteria for approval of State program amendments at 30 CFR 732.15 and 732.17.

The full text of the proposed program amendment submitted by Virginia is available for public inspection at the addresses listed above. Upon request to OSM's Field Office Director, each person may receive, free of charge, one single copy of the proposed amendments. If approved, the amendment will become part of the Virginia program.

### III. Procedural Requirements

1. *Compliance with the National Environmental Policy Act:* The Secretary has determined that, pursuant to section 702(d) of SMCRA, 30 U.S.C. 1291(d), no environmental impact statement need be prepared on this rulemaking.

2. *Executive Order No. 12291 and the Regulatory Flexibility Act:* On August 28, 1981, the Office of Management and Budget (OMB) granted OSM an exemption from sections 3, 4, 7, and 8 of

Executive Order 12291 for actions directly related to approval or conditional approval of State regulatory program. Therefore, this action is exempt from preparation of a Regulatory Impact Analysis and regulatory review by OMB.

The Department of the Interior has determined that this rule would not have a significant economic effect on a substantial number of small entities under the Regulatory Flexibility Act (5 U.S.C. 601 *et seq.*). This rule would not impose any new requirements; rather, it would ensure that existing requirements established by SMCRA and the Federal rules would be met by the State.

3. *Paperwork Reduction Act:* This rule does not contain information collection requirements which require approval by the Office of Management and Budget under 44 U.S.C. 3507.

**List of Subjects in 30 CFR Part 946**

Coal mining, Intergovernmental relations, Surface Mining, Underground mining.

Authority: Pub. L. 95-87, Surface Mining Control and Reclamation Act of 1977 (30 U.S.C. 1201 *et seq.*).

Dated: April 20, 1984.

J. Lisle Reed,

*Acting Director, Office of Surface Mining.*

[FR Doc. 84-11293 Filed 4-25-84; 8:45 am]

BILLING CODE 4310-05-M

---

## DEPARTMENT OF DEFENSE

## Office of the Secretary

## 32 CFR Part 199

[DoD Regulation 6010.8-R, Amdt. No. ]

## Civilian Health and Medical Program of the Uniformed Services (CHAMPUS); Amendment of Ambulance Service Coverage

**AGENCY:** Office of the Secretary, DoD.

**ACTION:** Proposed amendment to rule.

**SUMMARY:** This proposed rule will amend the comprehensive CHAMPUS Regulation, DoD 6010.8-R, which implements the Civilian Health and Medical Program of the Uniformed Service. The rule will revise the definition of "ambulance," remove the $100 allowable charge ceiling used to distinguish between local and long-distance ambulance service, and expand coverage for transfer to a Uniformed Service Medical Treatment Facility (USMTF). Elimination of the monetary limit, together with the expanded coverage, will make the ambulance service benefit more responsive to patients' needs and consistent with present day economic realities.

**DATE:** Written public comments must be received on or before May 25, 1983.

**FOR FURTHER INFORMATION CONTACT:** David E. Bennett, Policy Branch, OCHAMPUS, Aurora, Colorado 80045, telephone 303-361-8608.

**SUPPLEMENTARY INFORMATION:** In FR DoD 77-7834, appearing in the Federal Register on April 4, 1977 (42 FR 17972), the Office of the Secretary of Defense published its Regulation, DoD 6010.8-R, "Implementation of the Civilian Health and Medical Program of the Uniformed Services (CHAMPUS)," as part 199 of the Title.

Section 199.8 of the Part defines "ambulance" as a specifically designed and equipped, professionally operated land vehicle which must meet certain criteria in order to be considered an ambulance. Section 199.10(d)(3)(v) of the Part sets forth the provisions under which ambulance service may be considered for payment.

The provision for ambulance service payment distinguishes between local and long-distance ambulance service by defining local ambulance service as "that for which the reasonable charge does not exceed one hundred dollars ($100)." This distinction was placed in the part to eliminate approval and payment of ambulance service claims in those instances where the ambulance service was provided merely for convenience to the patient or physician rather than out of medical necessity. While the $100 ceiling has been effective in eliminating payment for such claims, it has also penalized those beneficiaries whose ambulance services were medically necessary but which exceeded the $100 limitation for local service and failed to meet the criteria for long-distance service.

The definition of "ambulance" in § 199.8 is inconsistent with the provisions for payment in § 199.10, since vehicles other than land vehicles may also be classified as ambulances. Also, due to rising ambulance service charges and varying service rates around the country, it is inappropriate to place a monetary limitation as the dividing element between local and long-distance ambulance service. The average nationwide charge for ambulance service is $122, including both the base and mileage rates. Beneficiaries residing within the general service area of a hospital or in a geographic area that has a high cost of living index should not be penalized financially because of residence.

Allowable charge or cost methodology is the most equitable means of adjudicating ambulance claims. Information from ambulance companies in each service area will be used in the development of prevailing charge screens. Established criteria in the Regulation together with the provisions of the proposed amendment will prevent payment of ambulance services provided for other than medical necessity. Approval will still be such criteria as medical necessity, closest appropriate facility, least costly, accessibility and others.

This amendment also expands ambulance coverge to include transfers to a USMTF. Section 199.10(d)(3)(v) restricts payment of ambulance services for transfer of stabilized patients to a USMTF after treatment at, or admission to, a civilian hospital. Benefits could only be extended if the civilian hospital did not have the necessary facilities to treat the patient and the USMTF was the nearest medical facility. This amendment expands ambulance coverage to include emergency transfers from a beneficiary's place of residence, accident scene or other location, and transfers to a USMTF after treatment at, or admission to, a civilian hospital. However, payment would only be made when the ambulance is ordered by other than USMTF personnel.

Amending the Regulation to allow benefits for transfer to a USMTF would be consistent with the current military health care trend to provide maximum direct care services. This would reduce CHAMPUS utilization and promote cost containment.

Section 605(b) of the Regulatory Flexibility Act of 1980 (Pub. L. 96-354) requires that each federal agency prepare, and make available for public comment, a regulatory flexibility analysis when the agency issues regulations which would have a significant impact on a substantial number of small entities. The Secretary certifies, pursuant to Section 605(b) of Title 5, United States Code, enacted by the Regulatory Flexibility Act (Pub. L. 96-354), that this regulation will not have a significant economic impact on a substantial number of small businesses, organizations or government jurisdictions.

We have determined that this regulation only involves an established body by technical regulations for which frequent and routine amendments are necessary to keep them operationally current. It is not, therefore, a "major rule" under Executive Order 12291.

**List of Subjects in 32 CFR Part 199**

Health insurance, Military personnel, Handicapped.

Accordingly, 32 CFR, Chapter I, is amended reading as follows:

## PART 199—IMPLEMENTATION OF THE CIVILIAN HEALTH AND MEDICAL PROGRAM OF THE UNIFORMED SERVICES

Section 199.8(b) is amended by revising the "ambulance" definition to read as follows:

**§ 199.8 Definitions.**

* * * * * *

(b) * * *

*Ambulance.* "Ambulance" means a specially designed vehicle for transporting the sick or injured that contains a stretcher, linens, first aid supplies, oxygen equipment and such life saving equipment required by state and local law, and that is staffed by personnel trained to provide first aid treatment.

* * * * *

Section 199.10 is amended by revising paragraph (d)(3)(v) to read as follows:

**§ 199.10 Basic program benefits.**

* * * * *

(d) * * *

(3) * * *

(v) *Ambulance.* Civilian ambulance service to, from and between hospitals is covered when medically necessary in connection with otherwise covered services and supplies and a covered medical condition. Ambulance service is also covered for transfers to a Uniformed Services Medical Treatment Facility (USMTF). For the purpose of CHAMPUS payment, ambulance service is always an outpatient service (including in connection with maternity care).

(*a*) Ambulance service is covered for emergency transfers from a beneficiary's place of residence, accident scene or other locations to a USMTF and for transfers to a USMTF after treatment at, or admission to, a civilian hospital if ordered by other than a representative of the USMTF.

(*b*) Ambulance service cannot be used in lieu of taxi service and is not payable when the patient's condition would have permitted use of regular private transportation; nor is it payable when transport or transfer of a patient is primarily for the purpose of having the patient nearer to home, family, friends or personal physician. Except as described in paragraph (d)(3)(V)(*a*) of this section, transport must be to the closest appropriate facility by the least costly means.

(*c*) Vehicles such as medicabs or ambicabs function primarily as public passenger conveyances transporting patients to and from their medical appointments. No actual medical care is provided to the patients in transit. These types of vehicles do not qualify for benefits for the purposes of CHAMPUS payment.

(*d*) Ambulance service by other than land vehicles (e.g., boat, airplane) may be considered only when the point of pick-up is inaccessible by a land vehicle, or when great distance or other obstacles are involved in transporting the patient to the nearest hospital with appropriate facilities and the patient's medical condition warrants speedy admission or is such that transfer by other means is contraindicated.

* * * * *

(10 U.S.C. 1079; 5 U.S.C. 301)

Dated: April 23, 1984.

M. S. Healy,

*OSD Federal Register Liaison Officer, Washington, Headquarters Services, Department of Defense.*

[FR Doc. 84-11237 Filed 4-25-84; 8:45 am]

BILLING CODE 3810-01-M

---

## DEPARTMENT OF TRANSPORTATION

### Coast Guard

### 33 CFR Part 100

[CGD 3-84-18]

### Regatta; Harvard-Yale Regatta, Thames River

**AGENCY:** Coast Guard, DOT.

**ACTION:** Notice of proposed rule making.

**SUMMARY:** Special Local Regulations are being proposed for the Harvard-Yale Regatta being sponsored by the Harvard-Yale Regatta Committee to be held on June 3, 1984 between the hours of 10:30 a.m. and 1:30 p.m. on the Thames River in New London, Connecticut. The Coast Guard is considering the issuance of this regulation to provide for the safety of participants and spectators on navigable waters during the event.

**DATES:** Comments must be received on or before May 25, 2984.

**ADDRESSES:** Comments should be mailed to Commander (b), Third Coast Guard District, Governors Island, New York, NY 10004. The comments will be available for inspection and copying at the Boating Safety Office, Building 110, Governors Island, New York, NY. Normal office hours are between 8:00 a.m. and 4:30 p.m., Monday through Friday, except holidays. Comments may also be hand-delivered to this address.

**FOR FURTHER INFORMATION CONTACT:** LTJG D. R. Cilley, (212) 668-7974.

**SUPPLEMENTARY INFORMATION:** Interested persons are invited to particpate in this proposed rulemaking by submitting written views, data, or arguments. Persons submitting comments should incude their names and addresses, identify this notice (CGD3-84-18) and the specific section of the proposal to which their comments apply, and give reasons for each comment. Receipt of comments will be acknowledged if a stamped, self-addressed postcard or envelope is enclosed. The rules may be changed in light of comments received. All comments received before the expiration of the comment period will be considered before final action is taken on this proposal. No public hearing is planned, but one may be held if written requests for a hearing are received and it is determined that the opportunity to make oral presentations will aid the rulemaking process.

*Drafting Information:* The drafters of this notice are LTJG D. R. Cilley, Project Officer, Boating Safety Office, and Ms. MaryAnn Arisman, Project Attorney, Third Coast Guard District Legal Office.

*Discussion of Proposed Regulations:* The annual Harvard-Yale Regatta is a crew race event to be held on the Thames River on June 3, 1984. It is sponsored by the Harvard Yale Regatta Committee and is well known to the boaters and residents of this area. Due to the large number of spectator boats present on the river for the purpose of watching this crew race it is anticipated that there will be considerable congestion in the area. In order to provide for the safety of life and property, the Coast Guard will restrict vessel movement in the area prior to, during, and after the races. The crew shells will race upriver again this year. This helped to reduce congestion at the Penn Central Draw Bridge at the conclusion of the races last year and ensured the safe movement of the spectator fleet down the Thames River after the races. Any races not held will be postponed until the next day. Three races are scheduled, starting with a 2 mile freshman race beginning at 11:00 a.m. The junior varsity's 3 mile race will start at 11:45 a.m., followed by the 4 mile varsity race at 12:30 p.m. The sponsor is providing patrol vessels in conjunction with Coast Guard and local resources to patrol this event. In order to provide for the safety of life and property, the Coast Guard will restrict vessel movement in the race course area and will establish special anchorages for what is expected to be a large spectator fleet.

*Exonomic Assessment and Certification:* This proposed regulation is considered to be nonsignificant in accordance with DOT Policies and Procedures for Simplification, Analysis, and Review of Regulations (DOT Order

2100.5). Its economic impact is expected to be minimal since this event will draw a large number of spectator craft into the area for the duration of the event. This should easily compensate merchants for the slight inconvenience of having navigation restricted. Based upon this assessment it is certified in accordance with Section 605(b) of the Regulatory Flexibility Act (5 U.S.C. 605(b)) that this regulation will not have a significant economic impact on a substantial number of small entities. Also, the regulation has been reviewed in accordance with Executive Order 12291 of February 17, 1981, on Federal Regulation and has been determined not to be a major rule under the terms of that order.

**List of Subjects in 33 CFR Part 100**

Marine safety, Navigation (water).

## PART 100—[AMENDED]

*Proposed Regulation:* In consideration of the foregoing, the Coast Guard proposes to amend Part 100 of Title 33, Code of Federal Regulations by adding a temporary § 100.35–302 to read as follows:

**§ 100.35–302 Harvard-Yale Regatta, Thames River.**

(a) *Regulated Area:* The Thames River at New London, Connecticut, from the Penn Central Draw Bridge to Bartlett Cove.

(b) *Effective Period:* This proposed regulation will be effective from 10:00 a.m. to 1:30 p.m. on June 3, 1984. In case of postponement, the raindate will be June 4, 1984 and this regulation will be in effect from 8:30 a.m. to 11:30 a.m.

(c) *Special Local Regulations:* (1) All persons or vessels not registered with sponsor as participants or not part of the regatta patrol are considered spectators.

(2) No spectator or press boats shall be allowed out onto or across the race course without Coast Guard escort.

(3) No person or vessel may transit through the regulated area during the effective period unless participating in the event, or as authorized by the sponsor or Coast Guard Patrol personnel. The Patrol Commander may open up the regulated area to allow for vessel movement between scheduled races.

(4) Spectator vessels must be at anchor within a designated spectator area or moored to a waterfront facility within the regulated area in such a way that they shall not interefere with the progress of the event at least 30 minutes prior to the start of the races, that is 10:30 a.m. on June 3, 1984. They must remain moored or at anchor until the men's varsity have passed their positions. At that time, spectator vessels located south of the Harvard Boathouse may proceed downriver at a reasonable speed. Vessels situated between the Harvard Boathouse and the finish line must remain stationary until both crews return safety to their boathouses. If for any reason the men's varsity crew race is postponed, spectator vessels will remain in position until notified by Coast Guard or regatta patrol personnel.

(5) The last 1000 feet of the race course near the finish line will be delineated by four (4) temporary white buoys provided by the sponsor. All spectator craft shall remain behind these buoys during the event.

(6) Spectator craft shall not anchor: (i) To the west of the race course, between Monocoke Hill and Bartlett Point Light.

(ii) Within the race course boundaries or in such a manner that would allow their vessel to drift or swing into the race course.

(7) During the effective period all vessels shall proceed at a speed not to exceed six (6) knots in the regulated area.

(8) Spectator vessels shall not follow the crew during the races.

(9) Swimming is prohibited in the vicinity of the race course during the races.

(10) A vessel operating in the vicinity of the Submarine Base may not cause wave which result in damage to submarines or other vessels in the floating drydocks.

(11) All persons and vessels shall comply with the instructions of the U.S. Coast Guard patrol personnel. Upon hearing five or more blasts from a U.S. Coast Guard vessel, the operator of a vessel shall stop immediately and proceed as directed. U.S. Coast Guard patrol personnel include commissioned, warrant and petty officers of the Coast Guard. Members of the Coast Guard Auxiliary may be present to inform vessel operators of this regulation and other applicable laws.

(12) For any violation of this regulation, the following maximum penalties are authorized by law: (i) $500 for any person in charge of the navigation of a vessel. (ii) $500 for the owner of a vessel actually on board. (iii) $250 for any other person. (iv) Suspension or revocation of a license of a licensed officer.

(46 U.S.C. 454; 33 CFR 100.35; and 33 CFR 1.01–1)

Dated: April 18, 1984.

W. E. Caldwell,

*Vice Admiral, U.S. Coast Guard District.*

[FR Doc. 84–11278 Filed 4–25–84; 8:45 am]

BILLING CODE 4910–14–M

## ENVIRONMENTAL PROTECTION AGENCY

### 40 CFR Part 180

[PP 3E2912/P332; PH-FRL 2543-6]

### Oxamyl; Proposed Tolerance

*Correction*

In FR Doc. 84–6780 appearing on page 9587 in the issue of Wednesday, March 14, 1984, make the following correction: In column two, first complete paragraph, line three, "(NOEL of mg/kg/day)" should read "NOEL of 2.5 mg/kg/day)".

BILLING CODE 1505–01–M

### 40 CFR Part 439

[OW-FRL-573-5]

### Pharmaceutical Manufacturing Point Source Category; Effluent Limitations Guidelines, Pretreatment Standards, and New Source Performance Standards

**AGENCY:** Environmental Protection Agency (EPA).

**ACTION:** Extension of comment period.

**SUMMARY:** On March 9, 1984, EPA published a notice of availability concerning new cost information which EPA intends to use in the development of effluent limitations reflecting the best conventional pollutant control technology (BCT) for the pharmaceutical manufacturing point source category (49 FR 8967). EPA is extending the end of the comment period on the information made available by the notice from April 9, 1984 to May 9, 1984. This extension is being granted because of a request for additional time to comment from a pharmaceutical industry association.

**DATES:** Comments on the notice of availability for the pharmaceutical manufacturing category (49 FR 8967) must be submitted to EPA by May 9, 1984.

**ADDRESSES:** Send comments to Dr. Frank H. Hund, Effluent Guidelines Division (WH-552), Environmental Protection Agency, 401 M Street, SW., Washington, D.C. 20460. Attention: Docket Clerk, Pharmaceutical Manufacturing. The information supporting the notice is available for inspection and copying at the EPA Public Information Reference Unit, Room 2404 (Rear) PM-213. The comments will be added to the record as they are received. The EPA Information Regulation (40 CFR Part 2) provides that a reasonable fee may be charged for copying.

**FOR FURTHER INFORMATION CONTACT:** Frank H. Hund (202) 382-7182.

**SUPPLEMENTARY INFORMATION:** On March 9, 1984, EPA published a notice of availability making available to the public new cost information which the Agency intends to use in the development of effluent limitations reflecting the best conventional pollutant control technology (BCT) for the pharmaceutical manufacturing point source category. The notice stated that all comments on the issue raised by the notice must be submitted by April 9, 1984. Since then, a pharmaceutical industry associatioin has requested that the Agency extend the comment period for thirty days.

In its request letter, the association maintained that the final BCT effluent limitations are very important to the industry and that the amount of information concerning the issues on which the Agency has requested comments is significant. The Agency agrees with the association that the final BCT effluent limitatioins are very important to the industry. After reviewing the information made available by the notice in the context of the specific issues raised by the Agency and considering the amount and complexity of the new information that has been made available, the Agency has determined that a sixty day comment period is appropriate. Therefore, the Agency will give equal consideration to all material submitted by May 9, 1984.

Dated: April 18, 1984.

Jack E. Ravan,

*Assistant Administrator for Water.*

[FR Doc. 84-11079 Filed 4-25-84; 8:45 am]

BILLING CODE 6560-50-M

## FEDERAL COMMUNICATIONS COMMISSION

### 47 CFR Part 73

[MM Docket No. 84-300; RM 4649]

### FM Broadcast Station in Payson, Arizona; Proposed Changes Made in Table of Assignments

**AGENCY:** Federal Communications Commission.

**ACTION:** Proposed rule.

**SUMMARY:** Action taken herein proposes the substitution of FM Channel 282 for Channel 280A at Payson, Arizona, and the modification of the construction permit of Station KPSN to specify operation on the new channel, at the request of High Country Broadcasting. The assignment of Channel 282 could provide Payson with its first wide coverage FM station.

**DATES:** Comments must be filed on or before June 11, 1984, and reply comments on or before June 26, 1984.

**ADDRESS:** Federal Communications Commission, Washington, D.C. 20554.

**FOR FURTHER INFORMATION CONTACT:** Leslie K. Shapiro, Mass Media Bureau, (202) 634-6530.

List of Subjects in 47 CFR Part 73

Radio broadcasting.

Notice of Proposed Rulemaking

Adopted: April 11, 1984.
Released: April 19, 1984.

In the Matter of Amendment of § 73.202(b), Table of Assignments, FM Broadcast Stations (Payson, Arizona) MM Docket No. 84-300, RM-4649.

By the Chief, Policy and Rules Division.

1. A petition for rulemaking was filed on October 25, 1983, by High Country Broadcasting ("petitioner") which seeks the substitution of Class C FM Channel 282 for Channel 280A at Payson, Arizona, and the subsequent modification of its construction permit for Station KPSN to specify the new channel.

2. We believe the petitioner's proposal warrants consideration. Channel 282 can be assigned in compliance with the minimum distance separation requirements. Since Payson is located within 320 kilometers (199 miles) of the U.S.-Mexican border, concurrence by the Mexican government is required before the assignment can be made.

3. In accordance with our established policy, we shall propose to modify the permit of Station KPSN to specify operation on Channel 282. However, if another party should indicate an interest in the Class C assignment, the modification might not be implemented. Instead, if the Class C channel is assigned, an opportunity for the filing of a competing application may be provided. See, *Cheyenne, Wyoming*, 62 F.C.C. 2d 63 (1976) and *Modification of FM and TV Station Licenses*, 48 FR 55585, published December 14, 1983.

4. Accordingly, in order to provide Payson with its first wide coverage FM station, the Commission proposes to amend the FM Table of Assignments, § 73.202(b) of the Rules, with regard to the community listed below, as follows:

| City | Channel No. | |
|---|---|---|
| | Present | Proposed |
| Payson, Arizona | 280A | 282 |

5. The Commission's authority to institute rulemaking proceedings, showings required, cut-off procedures, and filing requirements are contained in the attached Appendix and are incorporated by reference herein.

Note.—A showing of continuing interest is required by paragraph 2 of the Appendix before a channel will be assigned.

6. Interested parties may file comments on or before June 11, 1984, and reply comments on or before June 26, 1984, and are advised to read the Appendix for the proper procedures. Additionally, a copy of such comments should be served on the petitioner, as follows: Mr. Chuck Crisler, Broadcast Planning Services, P.O. Box 42, Greenwood, Arkansas 72936 (Consultant to petitioner).

7. The Commission has determined that the relevant provisions of the Regulatory Flexibility Act of 1980 do not apply to rule making proceedings to amend the FM Table of Assignments, § 73.202(b) of the Commission's Rules. See, *Certification that Section 603 and 604 of the Regulatory Flexibility Act Do Not Apply to Rule Making to Amend §§ 73.202(b), 73.504 and 73.606(b) of the Commission's Rules*, 46 FR 11549, published February 9, 1981.

8. For further information concerning this proceeding, contact Leslie K. Shapiro, Mass Media Bureau, (202) 634-6530. However, members of the public should note that from the time a Notice of Proposed Rule Making is issued until the matter is no longer subject to Commission consideration or court review, all *ex parte* contacts are prohibited in Commission proceedings, such as this one, which involve channel assignments. An *ex parte* contact is a message (spoken or written) concerning the merits of a pending rule making, other than comments officially filed at the Commission, or oral presentation required by the Commission. Any comment which has not been served on the petitioner constitute an *ex parte* presentation and shall not be considered in the proceeding. Any reply comment which has not been served on the person(s) who filed the comment, to which the reply is directed, constitutes an *ex parte* presentation and shall not be considered in the proceeding.

(Secs. 4, 303, 48 Stat., as amended, 1066, 1082; 47 U.S.C. 154, 303)

Federal Communications Commission.

Roderick K. Porter,

*Chief, Policy and Rules Division, Mass Media Bureau.*

Appendix

1. Pursuant to authority found in Section 4(i), 5(c)(1), 303 (g) and (r), and 307(b) of the Communications Act of

1934, as amended, and §§ 0.61, 0.204(b) and 0.283 of the Commission's Rules, it is proposed to amend the FM Table of Assignments, § 73.202(b) of the Commission's Rules and Regulations, as set forth in the *Notice of Proposed Rule Making* to which this Appendix is attached.

2. *Showings Required.* Comments are invited on the proposal(s) discussed in the *Notice of Proposed Rule Making* to which this Appendix is attached. Proponent(s) will be expected to answer whatever questions are presented in initial comments. The proponent of a proposed assignment is also expected to file comments even if it only resubmits or incorporates by reference its former pleadings. It should also restate its present intention to apply for the channel if it is assigned, and, if authorized, to build a station promptly. Failure to file may lead to denial of the request.

3. *Cut-off Procedures.* The following procedures will govern the consideration of filings in this proceeding.

(a) Counterproposals advanced in this proceeding itself will be considered, if advanced in initial comments, so that parties may comment on them in reply comments. They will not be considered if advanced in reply comments. (See § 1.420(d) of the Commission's Rules.)

(b) With respect to petitions for rule making which conflict with the proposal(s) in this *Notice,* they will be considered as comments in the proceeding, and Public Notice to this effect will be given as long as they are filed before the date for filing initial comments herein. If they are filed later than that, they will not be considered in connection with the decision in this docket.

(c) The filing of a counterproposal may lead the Commission to assign a different channel than was requested for any of the communities involved.

4. *Comments and Reply Comments; Service.* Pursuant to applicable procedures set out in §§ 1.415 and 1.420 of the Commission's Rules and Regulations, interested parties may file comments and reply comments on or before the dates set forth in the *Notice of Proposed Rule Making* to which this Appendix is attached. All submissions by parties to this proceeding or persons acting on behalf of such parties must be made in written comments, reply comments, or other appropriate pleadings. Comments shall be served on the petitioner by the person filing the comments. Reply comments shall be served on the person(s) who filed comments to which the reply is directed. Such comments and reply comments shall be accompanied by a certificate of service. (See § 1.420 (a), (b) and (c) of the Commission's Rules.)

5. *Number of Copies.* In accordance with the provisions of § 1.420 of the Commission's Rules and Regulations, an original and four copies of all comments, reply comments, pleadings, briefs, or other documents shall be furnished the Commission.

6. *Public Inspection of Filings.* All filings made in this proceeding will be available for examination by interested parties during regular business hours in the Commission's Public Reference Room at its headquarters, 1919 M Street, NW., Washington, D.C.

[FR Doc. 84-11204 Filed 4-25-84; 8:45 am]
BILLING CODE 6712-01-M

---

**47 CFR Part 73**

**[MM Docket No. 84-371; RM-4682]**

## Television Broadcast Station in Holly Springs, Mississippi; Proposed Changes Made in Table of Assignments

**AGENCY:** Federal Communications Commission.

**ACTION:** Proposed rule.

**SUMMARY:** Action taken herein proposes to assign UHF television Channel 40 to Holly Springs, Mississippi, as that community's first local television service, in response to a petition filed by North Mississippi Broadcasters.

**DATES:** Comments must be filed on or before June 11, 1984, and reply comments must be filed on or before June 26, 1984.

**ADDRESS:** Federal Communications Commission, Washington, D.C. 20554.

**FOR FURTHER INFORMATION CONTACT:** Nancy V. Joyner, Mass Media Bureau, (202) 634-6530.

### List of Subjects in 47 CFR Part 73

Radio broadcasting.

### Notice of Proposed Rulemaking

In the Matter of Amendment of § 73.606(b), Table of Assignments, Television Broadcast Stations (Holly Springs, Mississippi) MM Docket No. 84-371, RM-4682.

Adopted: April 11, 1984.
Released: April 19, 1984.

By the Chief, Policy and Rules Division.

1. The Commission has before it for consideration a petition for rule making filed by North Mississippi Broadcasters ("petitioner"), requesting the assignment of UHF television Channel 40 to Holly Springs, Mississippi, as that community's first television allocation. Petitioner states that it will apply for the channel, if assigned.

2. Holly Springs (population 7,285),[1] the seat of Marshall County (population 29,296), is located in north central Mississippi, approximately 70 kilometers (44 miles) southeast of Memphis, Tennessee.

3. A staff engineering study reveals that UHF television Channel 40 can be assigned to Holly Springs consistent with the minimum distance separation requirements of §§ 73.610 and 73.698 of the Commission's Rules.

4. In view of the above considerations, we believe the petitioner's proposal warrants consideration since it could provide a first local television service to Holly Springs, Mississippi. Accordingly, the Commission proposes to amend the Television Table of Assignments, § 73.606(b) of the Commission's Rules, as follows:

| City | Channel No. | |
|---|---|---|
| | Present | Proposed |
| Holly Springs, Mississippi | | 40 |

5. The Commission's authority to institute rule making proceedings, showings required, cut-off procedures, and filing requirements are contained in the attached Appendix and are incorporated by reference herein.

Note.—A showing of continuing interest is required by paragraph 2 of the Appendix before a channel will be assigned.

6. Interested parties may file comments on or before June 11, 1984, and reply comments on or before June 26, 1984, and are advised to read the Appendix for the proper procedures. Additionally, a copy of such comments should be served on the petitioners, or their counsel, or consultant, as follows: Tony Tidwell, President, North Mississippi Broadcasters, P.O. Box 73, Batesville, Mississippi 38606.

7. The Commission has determined that the relevant provisions of the Regulatory Flexibility Act of 1980 do not apply to rule making proceedings to amend the TV Table of Assignments, § 73.606(b) of the Commission's Rules.

[1] Population figures were extracted from the 1980 U.S. Census.

See, *Certification that Sections 603 and 604 of the Regulatory Flexibility Act Do Not Apply to Rule Making to Amend §§ 73.202(b), and 73.504 and 73.606(b) of the Commission's Rules*, 46 FR 11549, published February 9, 1981.

8. For further information concerning this proceeding, contact Nancy V. Joyner, Mass Media Bureau (202) 634-6530. However, members of the public should note that from the time a *Notice of Proposed Rule Making* is issued until the matter is no longer subject to Commission consideration, or court review, all *ex parte* contacts are prohibited in Commission proceedings, such as this one, which involve channel assignments. An *ex parte* contact is a message (spoken or written) concerning the merits of a pending rule making, other than comments officially filed at the Commission, or oral presentation required by the Commission. Any comment which has not been served on the petitioner constitutes an *ex parte* presentation and shall not be considered in the proceeding. Any reply comment which has not been served on the person(s) who filed the comment, to which the reply is directed, constitutes an *ex parte* presentation and shall not be considered in the proceeding.

(Secs. 4, 303, 48 Stat., as amended, 1066, 1082; 47 U.S.C. 154, 303)

Federal Communications Commission.

Roderick K. Porter,

*Chief, Policy and Rules Division, Mass Media Bureau.*

Appendix

1. Pursuant to authority found in Sections 4(i), 5(c)(1), 303 (g) and (r), and 307(b) of the Communications Act of 1934, as amended, and §§ 0.61, 0.204(b) and 0.283 of the Commission's Rules, it is proposed to amend the TV Table of Assignments, § 73.606(b) of the Commission's Rules and Regulations, as set forth in the *Notice of Proposed Rule Making* to which this Appendix is attached.

2. *Showings Required.* Comments are invited on the proposal(s) discussed in the *Notice of Proposed Rule Making* to which this Appendix is attached. Proponent(s) will be expected to answer whatever questions are presented in initial comments. The proponent of a proposed assignment is also expected to file comments even if it only resubmits or incorporates by reference its former pleadings. It should also restate its present intention to apply for the channel if it is assigned, and, if authorized, to build a station promptly. Failure to file may lead to denial of the request.

3. *Cut-off Procedures.* The following procedures will govern the consideration of filings in this proceeding.

(a) Counterproposals advanced in this proceeding itself will be considered, if advanced in initial comments, so that parties may comment on them in reply comments. They will not be considered if advanced in reply comments. (See § 1.420(d) of the Commission's Rules.)

(b) With respect to petitions for rule making which conflict with the proposal(s) in this *Notice*, they will be considered as comments in the proceeding, and Public Notice to this effect will be given as long as they are filed before the date for filing initial comments herein. If they are filed later than that, they will not be considered in connection with the decision in this docket.

(c) The filing of a counterproposal may lead the Commission to assign a different channel than was requested for any of the communities involved.

4. *Comments and Reply Comments; Service.* Pursuant to applicable procedures set out in §§ 1.415 and 1.420 of the Commission's Rules and Regulations, interested parties may file comments and reply comments on or before the dates set forth in the *Notice of Proposed Rule Making* to which this Appendix is attached. All submissions by parties to this proceeding or persons acting on behalf of such parties must be made in written comments, reply comments, or other appropriate pleadings. Comments shall be served on the petitioner by the person filing the comments. Reply comments shall be served on the person(s) who filed comments to which the reply is directed. Such comments and reply comments shall be accompanied by a certificate of service. (See § 1.420) (a), (b) and (c) of the Commission's Rules.)

5. *Number of Copies.* In accordance with the provisions of Section 1.420 of the Commission's Rules and Regulations, an original and four copies of all comments, reply comments, pleadings, briefs, or other documents shall be furnished the Commission.

6. *Public Inspection of Filings.* All filings made in this proceeding will be available for examination by interested parties during regular business hours in the Commission's Public Reference Room at its headquarters, 1919 M Street, NW., Washington, D.C.

[FR Doc. 84-11205 Filed 4-25-84; 8:45 am]

BILLING CODE 6712-01-M

DEPARTMENT OF THE INTERIOR

Fish and Wildlife Service

DEPARTMENT OF COMMERCE

National Oceanic and Atmospheric Administration

50 CFR Parts 17 and 227

Endangered and Threatened Wildlife and Plants

**AGENCIES:** Fish and Wildlife Service, Interior; National Marine Fisheries Service, NOAA, Commerce.

**ACTION:** Notice of withdrawal of Sea Turtle; proposed rule.

**SUMMARY:** The Services are withdrawing their proposed rule (48 FR 20098; May 4, 1983) to amend the Special Rules for Sea Turtles (50 CFR 17.42 and 227.72) under the Endangered Species Act to allow transshipment of certain green sea turtle (*Chelonia mydas*) products from the Cayman Turtle Farm, Cayman Islands, through the port of Miami, Florida. Transshipment of products through Miami will not be useful to the farm because trade with western European nations has been eliminated due to trade regulations imposed on January 1, 1984, by the European Econonic Community. The Government of the Cayman Islands has requested withdrawal of the proposed rule. This notice recognizes their requests.

**FOR FURTHER INFORMATION CONTACT:** Mr. Thomas J. Parisot, Chief, Federal Wildlife Permit Office, P.O. Box 3654, Arlington, Virginia 22203 (703/235-1903) or Mr. Charles Karnella, Office of Marine Mammals and Endangered Species, National Marine Fisheries Service, U.S. Department of Commerce, Washington, D.C. 20235 (202/634-7471).

List of Subjects

*50 CFR Part 17*

Endangered and threatened wildlife, Fish, Marine mammals, Plants (agriculture).

*50 CFR Part 227*

Threatended fish and wildlife, Regulation promulgation.

Dated: April 16, 1984.

G. Ray Arnett,

*Assistant Secretary for Fish and Wildlife and Parks.*

Dated: April 20, 1984.

William G. Gordon,

*Assistant Administrator for Fisheries.*

[FR Doc. 84-11225 Filed 4-25-84; 8:45 am]

BILLING CODE 4310-55-M

**DEPARTMENT OF COMMERCE**

**National Oceanic and Atmospheric Administration**

**50 CFR Part 650**

## New England Fishery Management Council; Sea Scallop Hearings

**AGENCY:** National Marine Fisheries Service (NMFS), NOAA, Commerce.

**ACTION:** Notice of public hearings.

**SUMMARY:** The New England Fishery Management Council will hold a series of public heaings on the proposed amendment to the Sea Scallop Fishery Management Plan. The proposed amendment would institute a minimum meat weight for sea scallops equivalent to 40 meats per pound which would replace the 30 meat count average and corresponding minimum shell height, remove the temporary adjustment of standards, and extend conformance with the minimum meat weight to a possession prohibition.

**DATES:** All hearings will begin at 7:00 p.m. See "**SUPPLEMENTARY INFORMATION**" for dates and locations of hearings.

**FOR FURTHER INFORMATION CONTACT:** Douglas G. Marshall, Executive Director, New England Fishery Management Council, Suntaug Office Park, 5 Broadway, Saugus, Massachusetts 01906, 617-231-0422.

**SUPPLEMENTARY INFORMATION:**

*Dates and Location*

April 30—Holiday Inn, Downtown, Portland, Maine Holiday Inn, Ellsworth, Maine

May 1—Skipper Motor Inn, Fairhaven, Massachusetts

May 2—Golden Eagle Inn, Cape May, New Jersey

May 3—Quality Inn-Lake Wright, Norfolk, Virginia

Dated: April 20, 1984.

Carmen J. Blondin,

*Deputy Assistant Administrator for Fisheries Resource Management, National Marine Fisheries Service.*

[FR Doc. 84-11226 Filed 4-25-84; 8:45 am]

BILLING CODE 3510-22-M

# Notices

Federal Register
Vol. 49, No. 82
Thursday, April 26, 1984

This section of the FEDERAL REGISTER contains documents other than rules or proposed rules that are applicable to the public. Notices of hearings and investigations, committee meetings, agency decisions and rulings, delegations of authority, filing of petitions and applications and agency statements of organization and functions are examples of documents appearing in this section.

## ADVISORY COUNCIL ON HISTORIC PRESERVATION

### Public Information Meeting

**AGENCY:** Advisory Council on Historic Preservation.

**ACTION:** Notice.

**SUMMARY:** Notice is hereby given pursuant to Section 800.6(b)(3) of the Council's regulations, "Protection of Historic and Cultural Properties" (36 CFR Part 800), that on May 3, 1984, at 7:00 p.m., a public information meeting will be held in the City Council's Chambers (3rd Floor), City Hall, 11th and Frederick Streets, St. Joseph, Missouri.

This meeting is being called by the Executive Director of the Council in accordance with § 800.6(b)(3) of the Council's regulations. The purpose of the meeting is to provide an opportunity for representatives of national, State, and local units of government, representatives of public and private organizations, and interested citizens to receive information and express their views concerning the proposed demolition of the Old City Auditorium, an undertaking of the city of St. Joseph using Community Development Block Grant funds obligated by the Department of Housing and Urban Development. The project as proposed would affect the Old City Auditorium, a property which appears to be eligible for inclusion in the National Register; and the Buchanan County Court House and the Wholesale Historic District, properties listed in the National Register of Historic Places. Consideration will be given to the undertaking, its effects on National Register and eligible properties, and alternate courses of action that could avoid, mitigate, or minimize adverse effects on these properties.

The following is a summary of the agenda of the meeting:

I. An explanation of the procedures and purpose of the meeting by a representative of the Executive Director of the Council.

II. A description of the undertaking and an evaluation of its effect on the properties by the city of St. Joseph, Missouri.

III. A statement by the Missouri State Historic Preservation Officer.

IV. Statements from local officials, private organizations, and the public on the effect of the undertaking on the properties.

V. A general question period.

Speakers should limit their statements to 5 minutes. Written statements in furtherance of oral remarks will be accepted by the Council at the time of the meeting. Additional information regarding the meeting is available from the Executive Director, Advisory Council on Historic Preservation, The Old Post Office, 1100 Pennsylvania Avenue, NW., Washington, D.C. 20004, telephone number 202-786-0505. Attention: Charlene Dwin.

Dated: April 20, 1984.

John M. Fowler,

*Acting Executive Director.*

[FR Doc. 84-11219 Filed 4-25-84; 8:45 am]

BILLING CODE 4310-10-M

## DEPARTMENT OF AGRICULTURE

### Forest Service

### Lewis and Clark National Forest Grazing Advisory Board; Meeting

The spring meeting of the Lewis and Clark National Forest Grazing Advisory Board is scheduled for 5:30 p.m. May 9, 1984, at the Ponderosa Inn, 220 Central Ave., Great Falls, Mt. The meeting will start with a social hour for getting acquainted with the new members of the Board. A no host dinner from the menu will follow at 6:30 p.m. The business meeting will follow the dinner.

The purpose of the meeting is to review the Lewis and Clark National Forest's range management program for fiscal year 1984 and proposals for 1985. The revised noxious weed program and the Forest's proposal to reevaluate the noxious weed program for 1985 will be discussed at the meeting. Discussion will also be held on other topics of interest to the Board.

The meeting will be open to the public. Persons who wish to attend should notify George P. Raths, Chairman of the Board, P.O. Box 478, Roundup, Montana 59072, phone 323-1084, or Wayne Phillips, Acting Secretary, Lewis and Clark National Forest, Box 871, Great Falls, Montana 59403, Phone 727-0901. Written statements may be filed with Board before or after the meeting.

Dated: April 20, 1984.

John D. Gorman,

*Forest Supervisor, Lewis and Clark National Forest.*

[FR Doc. 84-11282 Filed 4-25-84; 8:45 am]

BILLING CODE 3410-11-M

### Soil Conservation Service

### Manistee River RC&D Measure, Michigan; Finding of No Significant Impact

**AGENCY:** Soil Conservation Service, USDA.

**ACTION:** Notice of Finding of No Significant Impact

**SUMMARY:** Pursuant to Section 102(2)(C) of the National Environmental Policy Act of 1969; the Council on Environmental Quality Guidelines, (40 CFR Part 1500); and the Soil Conservation Service Guidelines (7 CFR Part 650); the Soil Conservation Service, U.S. Department of Agriculture, gives notice that an environmental impact statement is not being prepared for the Manistee River RC&D Measure, Manistee County, Michigan.

**FOR FURTHER INFORMATION CONTACT:** Mr. Homer R. Hilner, State Conservationist, Soil Conservation Service, 1405 South Harrison Road, East Lansing, Michigan 48823, telephone 517-337-6702.

**SUPPLEMENTARY INFORMATION:** The environmental assessment of this federally assisted action indicates that the project will not cause significant local, regional, or national impacts on the environment. A contact has been made with the State Historical Preservation Officer and concludes that it will have no effect on any cultural resources either eligible for or listed on the Nationl Register of Historic Places. The State Archaeologist will be contacted if any land disturbance associated with this project and archaeological sites, features, or materials are encountered during actual construction. As a result of these findings, Mr. Homer R. Hilner, State Conservationist, has determined that the preparation and review of an

environmental impact statement are not needed for this project.

The measure concerns a plan for the installation of measures for critical area treatment. The planned works of improvement include the following items: 3,700 feet of rock riprap and four erosion control structures. All areas disturbed during construction will be seeded, mulched, and fertilized. Total construction cost is estimated to be $277,500; $180,400 RC&D funds and $97,100 local funds.

The Notice of a Finding of No Significant Impact (FONSI) has been forwarded to the Environmental Protection Agency. The basic data developed during the environmental assessment are on file and may be reviewed by contacting Mr. Homer R. Hilner. The FONSI has been sent to various federal, state, and local agencies and interested parties. A limited number of copies of the FONSI are available to fill single copy requests at the above address.

Implementation of the proposal will not be initiated until 30 days after the date of this publication in the Federal Register.

(Catalog of Federal Domestic Assistance Program No. 10.901, Watershed Protection and Flood Prevention Program. Office of Management and Budget Circular A-95 regarding state and local clearinghouse review of federal and federally assisted programs and projects is applicable)

Dated: April 19, 1984.

Homer R. Hilner,

*State Conservationist.*

[FR Doc. 84-11201 Filed 4-25-84; 8:45 am]

BILLING CODE 3410-16-M

## ARCHITECTURAL AND TRANSPORTATION BARRIERS COMPLIANCE BOARD

### Meeting

**AGENCY:** Architectural and Transportation Barriers Compliance Board.

**ACTION:** Notice of ATBCB meeting.

**SUMMARY:** The Architectural and Transportation Barriers Compliance Board (ATBCB) has scheduled a meeting to be held from 1:00 p.m. to 5:00 p.m., Tuesday, May 8, 1984, to take place in the main hall of the Disabled American Veterans (DAV) Headquarters, 807 Maine Avenue, SW., Washington, D.C.

Items to be discussed: election of the ATBCB Chairperson, election of the ATBCB Vice Chairperson, and election of the ATBCB Executive Committee.

**DATE:** May 8, 1984—1:00 p.m.–5:00 p.m.

**ADDRESS:** Disabled American Veterans (DAV) Headquarters, Main Hall, 807 Maine Avenue; SW., Washington, D.C.

**FOR FURTHER INFORMATION CONTACT:** Larry Allison, Special Assistant for External Affairs, (202) 245-1591 (voice or TDD).

Committee meetings of the ATBCB will be held on Monday, May 7, in Room 1169, Health and Human Services North Building, 300 Independence Avenue, SW., Washington, D.C., and Tuesday morning, May 8, in the second floor meeting area of the Disabled American Veterans (DAV) Headquarters, 807 Maine Avenue, SW., Washington, D.C.

Robert M. Johnson,

*Executive Director.*

[FR Doc. 84-11229 Filed 4-25-84; 8:45 am]

BILLING CODE 6820-BP-M

## CIVIL AERONAUTICS BOARD

[84-4-78, Dockets 41524 and 41662]

### Notice of Order To Show Cause; Aerial Transit Co.

**SUMMARY:** The Board has tentatively decided to issue a certificate to Aerial Transit Company authorizing it to engage in foreign charter air transportation of cargo.

### Objections

All interested persons having objections to the Board's tentative findings and conclusions that this action be taken, as described in the order cited above, shall no later than May 10, 1984, file a statement ofsuch objections with the Civil Aeronautics Board (20 copies, addressed to Docket 41524, Docket Section, Civil Aeronautics Board, Washington, D.C. 20428) and mail copies to Aerial Transit Company and the Departments of State and Transportation.

A statement of objections must cite the docket number and must include a summary of testimony, statistical data, or other such supporting evidence.

If no objections are filed, the Board will issue an order which will make final the Board's tentative findings and conclusions and issue a certificate authorizing Aerial to engage in foreign charter air transportation of property and mail.

To get a copy of the complete order, request it from the C.A.B. Distribution Section, Room 100, 1825 Connecticut Avenue, NW., Washington, D.C. 20428, (202) 673-5432. Persons outside the Washington metropolitan area may send a postcard request.

**FOR FURTHER INFORMATION CONTACT:** Don Hainbach, (202) 673-5035, Bureau of International Aviation, Civil Aeronautics Board, Washington, D.C. 20428.

By the Civil Aeronautics Board: April 20, 1984.

Phyllis T. Kaylor,

*Secretary.*

[FR Doc. 84-11203 Filed 4-25-84; 8:45 am]

BILLING CODE 6320-01-M

[Docket 40201]

### Air New England/Mackey International Airlines; Employee Protection Program Investigation; Change in Hearing Date

Notice is hereby given that the hearing in the above-entitled matter, which had been scheduled to commence on May 16, 1984, is hereby re-scheduled to commence on May 14, 1984, at 9:30 a.m. (local time) in Room 1027, Universal Building, 1825 Connecticut Ave., NW., Washington, D.C., before the undersigned Chief Administrative Law Judge. The change in hearing dates has been made necessary by the decision of the Board to hold its public meeting in Room 1027 on May 17, 1984.

Dated at Washington, D.C., April 19, 1984.

Elias C. Rodriguez,

*Chief Administrative Law Judge.*

[FR Doc. 84-11204 Filed 4-25-84; 8:45 am]

BILLING CODE 6320-01-M

[Docket 42005; Order 84-4-68]

### Complaint of Continental Air Lines, Inc. Against the Government of Australia and Qantas Airways, LTD.; Order

Adopted by the Civil Aeronautics Board at its office in Washington, D.C. on the 18th day of April, 1984.

On February 17, 1984, Continental Air Lines, Inc. refiled its complaint formerly filed in Docket 41800 against the Government of Australia and its flag carrier, Qantas Airways, Ltd. Continental requested that the Board act immediately under Section 402 of the Federal Aviation Act and Section 2 of the International Air Transportation Fair Competitive Practices Act (IATFCPA) to minimize the disruption of Continental's operation to Australia resulting from a labor ban on the provision of ground and air traffic control services effective Saturday, February 18 (Sunday, Australian time). Specifically, Continental requested that the Board (1) immediately issue an order without hearing suspending Qantas' services to the United States for so long as the ban is in effect with regard to Continental's

services to Australia; and (2) institute a formal investigation on an expedited basis to determine the extent of the violations of Continental's rights under the U.S.-Australia Air Transport Services Agreement and applicable law and to impose appropriate sanctions.

We received answers opposing the complaint from the Air Line Pilots Association, the International Association of Machinists and Aerospace Workers,[1] Qantas Airways, Ltd., and the Embassy of Australia in Washington, D.C. Continental filed a consolidated reply.

Continental is currently operating all its services to Australia without difficulty. The circumstances that gave rise to this proceeding apparently have been alleviated. In these circumstances, we find that the public interest is best served by terminating this proceeding. We shall, therefore, dismiss the complaint without prejudice to refiling should circumstances warrant.

Accordingly, 1. We dismiss without prejudice the complaint of Continental Air Lines, Inc., in Docket 42005;

2. We shall grant the motion of the International Association of Machinists and Aerospace Workers for leave to file late;

3. We may amend, modify, or revoke this order at any time without hearing; and

4. We will serve this order upon Continental Air Lines, Inc., Qantas Airways, Ltd., the Air Line Pilots Association, the International Association of Machinists and Aerospace Workers, the Ambassador of Australia in Washington, D.C., and the United States Departments of State and Transportation.

We shall publish this order in the Federal Register.

By the Civil Aeronautics Board.

Phyllis T. Kaylor,

*Secretary.*

[FR Doc. 84-11288 Filed 4-25-84; 8:45 am]

BILLING CODE 6320-01-M

---

[Docket 42117]

## Lusair International, Inc. Fitness Investigation; Assignment of Proceeding

This proceeding has been assigned to Administrative Law Judge Ronnie A. Yoder. Future communications should be addressed to him.

[1] The International Association of Machinists Aerospace Workers accompanied this answer with a motion for leave to file late. We shall grant the motion.

Dated: Washington, D.C., April 19, 1984.

Elias C. Rodriguez,

*Chief Administrative Law Judge.*

[FR Doc. 84-11285 Filed 4-25-84; 8:45 am]

BILLING CODE 6320-01-M

---

[Order 84-4-71]

## Fitness Investigation of Premiere Airlines, Inc.

**AGENCY:** Civil Aeronautics Board.

**ACTION:** Notice of Order instituting the *Premiere Airlines, Inc. Continuing Fitness Investigation*, Order 84-4-71.

**SUMMARY:** The Board is instituting an investigation to determine the continuing fitness of Premiere Airlines, Inc., to engage in interestate and overseas scheduled air transportation and whether Premiere will continue to be a citizen under the Act if the certificate conditions relating to citizenship ar removed.

**DATE:** Persons wishing to intervene in the *Premiere Airlines, Inc. Continuing Fitness Investigation* shall fire their petitions in Docket 42155 by May 3, 1984, and serve then on all persons listed below.

**ADDRESSES:** Requests for additional evidence and petitions to intervene should be filed in Docket 42155 and addressed to the Docket Section, Civil Aeronautics Board, Washington, D.C. 20428.

In addition, copies of such filings should be served on Premiere, Inc., the Federal Aviation Administration and any other person filing petitions.

**FOR FURTHER INFORMATION CONTACT:** Phyllis Solomon, Bureau of Domestic Aviation, Civil Aeronautics Board, 1825 Connecticut Avenue, N.W., Washington, D.C. 20428, (202) 673-5340.

**SUPPLEMENTARY INFORMATION:** The complete text of Order 84-4-71 is available from the Distribution Section, Room 100, 1825 Connecticut Avenue, NW., Washington, D.C. 20428. Persons outside the metropolitan area may send a postcard request for Order 84-4-71 to that address.

By the Civil Aeronautics Board: April 20, 1984.

Phyllis T. Kaylor,

*Secretary.*

[FR Doc. 84-11286 Filed 4-25-84; 8:45 am]

BILLING CODE 6320-01-M

---

[Order 84-4-74]

## Application of Purolator Courier Corp. for Review of Fitness

**AGENCY:** Civil Aeronautics Board.

**ACTION:** Notice of Order to Show Cause (84-4-74).

**SUMMARY:** The Board is proposing to find that Purolator Courier Corp. continues to be fit to provide the air transportation authorized by the certificate issued to it in Orders 79-6-31 and 80-2-21 for domestic all-cargo air transportation. The complete text of this order is available, as noted below.

### Responses

All interested persons wishing to respond to the Board's tentative fitness review shall file their responses in Docket 41847. Responses shall be addressed to the Docket Section, Civil Aeronautics Board,, Washington, D.C. 20428, and should be served upon Purolator Courier Corp, and the Federal Aviation Administration, Washington, D.C. 20591. Responses shall be filed no later than May 10, 1984.

**FOR FURTHER INFORMATION CONTACT:** Carolyn S. Kramp, Bureau of Domestic Aviation, Civil Aeronautics Board, 1825 Connecticut Avenue, NW., Washington, D.C. 20428 (202) 673-5090.

**SUPPLEMENTARY INFORMATION:** The complete text of Order 84-4-74 is available from the Distribution Section, Room 100, 1825 Connecticut Avenue, NW., Washington, D.C. 20428. Persons outside the metropolitan area may send a postcard request for Order 84-4-74 to that address.

By the Civil Aeronautics Board: April 20, 1984.

Phyllis T. Kaylor,

*Secretary.*

[FR Doc. 84-11287 Filed 4-25-84; 8:45 am]

BILLING CODE 6320-02-M

---

## Application for an All-Cargo Air Service Certificate

*Correction*

In FR Doc. 84-10425 appearing on page 15245 in the issue of Wednesday, April 18, 1984, make the following correction.

In the second column, first paragraph, line 6, "Docket 41932" should read "Docket 41943".

BILLING CODE 1505-01-M

---

# COMMISSION ON CIVIL RIGHTS.

## Maryland Advisory Committee; Agenda and Notice of Public Meeting

Notice is hereby given, pursuant to the provisions of the Rules and Regulations of the U.S. Commission on Civil Rights, that a meeting of the Maryland Advisory

Committee to the Commission will convene at 6:00 p.m. and will end at 9:00 p.m., on May 23, 1984, at the Anne Arundel County Board of Education, Conference Room 1, 2644 Riva Road, Annapolis, Maryland 21401. The purpose of the meeting is to plan future project activity following a discussion of specific civil rights issues in education, employment, public accommodations, and eliminating violence and bigotry.

Persons desiring additional information, or planning a presentation to the Committee, should contact the Chairperson, Patsy B. Blackshear, at (202) 724-4256 or the Mid-Atlantic Regional Office at (202) 264-6670.

The meeting will be conducted pursuant to the provisions of the Rules and Regulations of the Commission.

Dated at Washington, D.C., April 23, 1984.

John I. Binkley,

*Advisory Committee Management Officer.*

[FR Doc. 84-11283 Filed 4-25-84; 8:45 am]

BILLING CODE 6335-01-M

## Minnesota Advisory Committee; Agenda and Notice of Public Meeting

Notice is hereby given, pursuant to the provisions of the Rules and Regulations of the U.S. Commission on Civil Rights, that a meeting of the Minnesota Advisory Committee to the Commission will convene at 6:00 p.m. and will end at 9:00 p.m., on June 4, 1984, at the Holiday Inn St. Paul (Capital), Capital Plaza, 161 St. Anthony, St Paul, Minnesota 55103. The purpose of the meeting is to discuss a number of civil rights issues and to review progress on the Committee's study of access of language minorities to community health programs.

Persons desiring additional information, or planning a presentation to the Committee, should contact the Chairperson, Ruth A. Myers, at (218) 726-7235 or the Midwestern Regional Office at (312) 353-7479.

The meeting will be conducted pursuant to the provisions of the Rules and Regulations of the Commission.

Dated at Washington, D.C., April 20, 1984.

John I. Binkley,

*Advisory Committee Management Officer.*

[FR Doc. 84-11284 Filed 4-25-84; 8:45 am]

BILLING CODE 6335-01-M

## Wisconsin Advisory Committee; Agenda and Notice of Public Meeting

Notice is hereby given, pursuant to the provisions of the Rules and Regulations of the U.S. Commission on Civil Rights, that a meeting of the Wisconsin Advisory Committee to the Commission will convene at 1:00 p.m. and will end at 3:00 p.m., on May 24, 1984, at the Federal Building, 517 E. Wisconsin Avenue, Milwaukee, Wisconsin 53202. The purpose of the meeting is to discuss the status of the Committee's projects on hate groups, education equality, and desegregation in Milwaukee.

Persons desiring additional information, or planning a presentation to the Committee, should contact the Chairperson, Herbert Hill, at (608) 263-2380 or the Midwestern Regional Office at (312) 353-7479.

The meeting will be conducted pursuant to the provisions of the Rules and Regulations of the Commission.

Dated at Washington, D.C., April 23, 1984.

John I. Binkley,

*Advisory Committee Management Officer.*

[FR Doc. 84-11285 Filed 4-25-84; 8:45 am]

BILLING CODE 6335-01-M

# DEPARTMENT OF COMMERCE

## International Trade Administration

[A-351-025]

## Preliminary Determination of Sales at Less Than Fair Value; Hot-Rolled Carbon Steel Sheet From Brazil

**AGENCY:** International Trade Administration, Commerce.

**ACTION:** Notice.

**SUMMARY:** We preliminarily determine that hot-rolled carbon steel sheet from Brazil is being sold, or is likely to be sold, in the United States at less than fair value. We have notified the United States International Trade Commission (ITC) of our determination, and we have directed the U.S. Customs Service to suspend liquidation of all entries of the subject merchandise. We have directed the Customs Service to require a cash deposit or the posting of a bond for each such entry in an amount equal to the estimated dumping margins as described in the "Suspension of Liquidation" section of this notice. We have preliminarily determined that one producer should be excluded from this determination. Those firms subject to the suspension of liquidation and the firm that is excluded from this action are identified in the "Suspension of Liquidation" section of this notice.

If this investigation proceeds normally, we will make our final determination by July 2, 1984.

**EFFECTIVE DATE:** April 26, 1984.

**FOR FURTHER INFORMATION CONTACT:** Mary S. Clapp, Office of Investigations, Import Administration, International trade administration, U.S. Department of Commerce, 14th Street and Constitution Avenue, NW., Washington, D.C. 20230; telephone: (202) 377/2438.

**SUPPLEMENTARY INFORMATION:**

### Preliminary Determination

We preliminarily determine that there is a reasonable basis to believe or suspect that hot-rolled carbon steel sheet from Brazil is being sold, or is likely to be sold, in the United States at less than fair value, as provided in section 733 of the Tariff Act of 1930, as amended (19 U.S.C. 1673b) (the Act). We found *de minimis* margins on sales of hot-rolled carbon steel sheet from CSN, which is one of the three firms investigated. Therefore, CSN is excluded from this determination.

We found that the foreign market value of hot-rolled carbon steel sheet from Brazil exceeded the United States price on 3.8 percent of the sales of this product. These margins ranged from 0.12 percent to 44.02 percent and the overall weighted-average margin for firms not being excluded on all hot-rolled carbon steel sheet sales compared is 6.50 percent. The weighted-average margins for individual companies are presented in the "Suspension of Liquidation" section of this notice.

We found one sale from CSN on which the foreign market value exceeded the United States price. The weighted-average margin for CSN was 0.14 percent, which is *de minimis*.

If this investigation proceeds normally, we will make our final determination by July 2, 1984.

### Case History

On November 10, 1983, we received petitions from United States Steel Corporation on behalf of the domestic certain carbon steel product industry. In accordance with the filing requirements of § 353.36 of our regulations (19 CFR 353.36), the petitions alleged that imports of certain carbon steel product (hot-rolled carbon steel sheet and cold-rolled carbon steel sheet) from Brazil are being, or are likely to be, sold in the United States at less than fair value within the meaning of section 731 of the Act, and that these imports are materially injuring, or threatening to materially injure, a United States industry.

After reviewing the petitions, we determined that they contained sufficient grounds to initiate antidumping investigations. We notified the ITC of our action and initiated the investigations on November 22, 1983 (48 FR 55011). On December 27, 1983, we were informed by the ITC that there is a reasonable indication that imports of certain carbon steel products are

materially injuring a United States industry.

On March 13, 1984, the petitions were amended to include an allegation that "critical circumstances" exist with respect to sales of certain carbon steel products from Brazil pursuant to section 733(e) of the Act.

Questionnaires were presented to Companhia Siderurgica Paulista (COSIPA), Companhia Siderurgica Nacional (CSN), and Usinas Siderurgicas de Minas Gerais S/A (USIMINAS) on December 2, 1983. We received responses on February 8, 16, and 22, 1984.

Scope of Investigation

The merchandise covered by this investigation is hot-rolled carbon steel sheet.

The term "*hot-rolled carbon steel sheet*" covers the following hot-rolled carbon steel products. Hot-rolled carbon steel sheet is a flat-rolled carbon steel product, whether or not corrugated or crimped; not cold-rolled, not cut, not pressed, and not stamped to non-rectangular shape, not coated or plated with metal, 0.1875 inch or more in thickness, over 8 inches in width and pickled; as currently provided for in item 607.8320 of the Tariff Schedules of the United States Annotated (*TSUSA*), or under 0.1875 inch in thickness and over 12 inches in width, whether or not pickled, whether or not in coils, as currently provided for in items 607.6710, 607.6720, 607.6730, 607.6740, or 607.8342 of the *TSUSA*. Please note that the description of hot-rolled carbon steel sheet includes some products classified as "plate" in the *TSUSA*.

The hot-rolled carbon steel sheet covered by this investigation is a different product from that covered by the recent investigations on "hot-rolled carbon steel plate and sheet from Brazil." The sheet in those investigations is the product described as "plate in coil" in Appendix A of the notice of "Certain Carbon Steel Products from Mexico, Initiation of Countervailing Duty Investigations" (48 FR 55013).

This investigation covers the period from June 1, 1983, to November 30, 1983. COSIPA, CSN, and USIMINAS are the only known Brazilian producers who export the subject merchandise to the United States. We examined virtually all of United States sales made during the period of investigation.

Fair Value Comparisons

To determine whether sales of the subject merchandise in the United States were made at less than fair value, we compared the United States price with the foreign market value.

United States Price

As provided in section 772(b) of the Act, we used the purchase price of the subject merchandise to represent the United States price because the merchandise was sold to unrelated purchasers prior to its importation into United States. We calculated the purchase price based on the F.O.B. or C & F price to United States purchasers. We deducted brokerage charges, inland freight, handling charges, inland insurance, ocean freight and other expenses incurred in delivering the products to the port of exportation, where appropriate. We adjusted for taxes refunded or not collected because the products were being exported, where appropriate.

Foreign Market Value

In accordance with section 773(a)(1) of the Act, we used home market prices where there were sufficient home market sales at or above cost of production to determine foreign market value. Where there were no or insufficient sales in the home market at prices at or above cost, we used constructed value. The petitioner alleged that sales in the home market were at prices below the cost of producing hot-rolled carbon steel sheet. We examined production costs, including materials, labor and general expenses. In calculating foreign market value, we made currency conversions from Brazilian cruzeiros to United States dollars in accordance with § 353.56(a)(1) of the Commerce regulations using the certified daily exchange rates.

We found sales of certain subgroups of the subject merchandise were made at less than cost over an extended period of time, in substantial quantities and at prices not permitting the recovery of all costs within a reasonable period of time in the normal course of trade. Where there were insufficient sales above cost and we could not use sales in the home market to determine the foreign market value of the products under investigation which are in these subgroups, we used constructed value. Sufficient sales of other subgroups of the products under investigation were made in the home market at or above cost. Therefore, we used home market prices to determine the foreign market value for these subgroups.

The home market prices were based on ex-factory price to unrelated home market purchasers. From these prices we deducted discounts, where appropriate. We also adjusted, where appropriate, for the differences between commissions on sales to the United States and indirect selling expenses in the home market used as an offset to U.S. commissions in accordance with 19 CFR 353.15(c). We also made a circumstance of sale adjustment for differences in credit terms in the two markets.

No claims were made for adjustments for differences in physical characteristics. Packing was not included in the price to either market.

In accordance with section 773 of the Act, we calculated constructed value, where appropriate, by adding the costs of materials and of fabrication, general expenses, and profit. For materials and fabrication, we used the appropriate producer's actual cost figures.

We used the actual general expenses since they exceeded the statutory minimum of 10 percent of the sum of material and fabrication costs. We calculated profit using the statutory minimum of eight percent of the sum of the general expenses and cost since the actual profit was less than the statutory minimum. We did not add packing costs since the merchandise sold to the United States was sold unpacked.

Verification

As provided in section 776(a) of the Act, we will verify all data used in reaching the final determination.

Negative Preliminary Determination of Critical Circumstances

U.S. Steel alleged that imports of hot-rolled carbon steel sheet present "critical circumstances". Under section 733(e) of the Act, critical circumstances exist when the Department has a reasonable basis to believe or suspect that: (1) There is a history of dumping in the United States or elsewhere of the class or kind of the merchandise which is the subject of the investigation, or the person by whom, or for whose account, the merchandise was imported knew or should have known that the exporter was selling the merchandise which is the subject of the investigation at less than fair value; and (2) there have been massive imports of the class or kind of the merchandise which is the subject of the investigation over a relatively short period.

In preliminarily determining whether there is a history of dumping of hot-rolled carbon steel sheet from Brazil in the United States or elsewhere, we reviewed past antidumping findings of the Department of the Treasury as well as past Department of Commerce antidumping duty orders. We found no past antidumping determinations on hot-rolled carbon steel sheet from Brazil

which covered the class or kind of hot-rolled carbon steel sheet which is the subject of this investigation. We also reviewed the antidumping actions of other countries made available to us through the Antidumping Code Committee established by the Agreement on Implementation of Article VI of the General Agreement on Tariffs and Trade. On May 18, 1983, in Commission Recommendation No. 1230/83 ECSC, the Commission of the European Communities imposed antidumping duties on imports of sheets and plates, of iron and steel, not further worked than hot-rolled of a thickness of 3mm or more, originating in Brazil. While this recommendation included some merchandise within the scope of our investigation, a substantial portion of the merchandise covered by our investigation (sheet which is less than 3mm in thickness) does not fall within the scope of the Commission Recommendation. Thus, we did not find the requisite history of dumping of the general class or kind of merchandise.

We also considered whether the person by whom, or for whose account, this product was imported knew or should have known that the exporters were selling this product at less than fair value. Given the small margins found for this preliminary determination, we do not have reason to believe or suspect that the importer knew or should have known that this product was sold at less than fair value. Since we do not find a history of dumping or knowledge, we need not determine whether there were massive imports.

For the reasons described above, we preliminarily determine that "critical circumstances" do not exist with respect to hot-rolled carbon steel sheet from Brazil.

### Suspension of Liquidation

In accordance with section 733(d) of the Act, we are directing the U.S. Customs Service to suspend liquidation of all entries of hot-rolled carbon steel sheet from Brazil with the exception of hot-rolled carbon steel sheet produced by CSN. This suspension of liquidation applies to all merchandise entered, or withdrawn from warehouse, for consumption, on or after the date of publication of this notice in the Federal Register. The U.S. Customs Service shall require a cash deposit or the posting of a bond equal to the estimated weighted-average margin amount by which the foreign market value of the merchandise subject to this investigation exceeds the United States price. The suspension of liquidation will remain in effect until further notice. The weighted-average margins are as follows:

| Manufacturers/producers/exporters | Weighted-average margins (percent) |
|---|---|
| Hot-rolled carbon steel sheet: | |
| COSIPA | 8.07 |
| CSN (excluded from this determination) | 0.14 |
| USIMINAS | 1.44 |
| All other manufacturers/producers/exporters | 6.50 |

### ITC Notification

In accordance with section 733(f) of the Act, we will notify the ITC of our determination. In addition, we are making available to the ITC all non-privileged and non-confidential information relating to this investigation. We will allow the ITC access to all privileged and confidential information in our files, provided the ITC confirms that it will not disclose such information, either publicly or under an administrative protective order, without the written consent of the Deputy Assistant Secretary for Import Administration.

The ITC will determine whether these imports are materially injuring or threatening to materially injure a U.S. industry, before the later of 120 days after the Department makes its preliminary affirmative determination or 45 days after the Department makes its final affirmative determination.

### Public Comment

In accordance with § 353.47 of the Commerce Department Regulations, if requested, we will hold a public hearing to afford interested parties an opportunity to comment on this preliminary determination at 10:00 a.m. on May 31, 1984 at the United States Department of Commerce, conference room 3708, 14th Street and Constitution Avenue, NW., Washington, D.C. 20230. Individuals who wish to participate in the hearing must submit a request to the Deputy Assistant Secretary for Import Administration, Room 3099B, at the above address within 10 days of this notice's publication. Requests should contain: (1) The party's name, address, and telephone number, (2) the number of participants, (3) the reason for attending, and (4) a list of the issues to be discussed. In addition, prehearing briefs in at least 10 copies must be submitted to the Deputy Assistant Secretary by May 29, 1984. Oral presentations will be limited to issues raised in the briefs. All written views should be filed in accordance with 19 CFR 353.46, within 30 days of this notice's publication, at the above address and in at least 10 copies.

Dated: April 18, 1984.

Alan F. Holmer,

*Deputy Assistant Secretary for Import Administration.*

[FR Doc. 84-11300 Filed 4-25-84; 8:45 am]

BILLING CODE 3510-DS-M

[C-351-021]

## Certain Carbon Steel Products From Brazil; Final Affirmative Countervailing Duty Determinations

**AGENCY:** International Trade Administration, Commerce.

**ACTION:** Notice.

**SUMMARY:** We determine that certain benefits that constitute subsidies within the meaning of the countervailing duty law are being provided to manufacturers, producers, or exporters in Brazil of certain carbon steel products. The net subsidy is 36.48 percent *ad valorem* for COSIPA, 62.18 percent *ad valorem* for CSN, and 17.49 percent *ad valorem* for USIMINAS. In addition, we have determined that critical circumstances exist with respect to the importation of certain carbon steel products from Brazil. Therefore, we have notified the United States International Trade Commission (ITC) of our determinations. We are directing the U.S. Customs Service to continue to suspend liquidation of all entries of certain carbon steel products from Brazil that are entered, or withdrawn from warehouse, for consumption, on or after November 12, 1983, and to require a cash deposit or bond on these products in the amount equal to the estimated net subsidy.

**EFFECTIVE DATE:** April 26, 1984.

**FOR FURTHER INFORMATION CONTACT:** Mary S. Clapp, Andrew Debicki, or Alain Letort, Office of Investigations, Import Administration, International Trade Administration, U.S. Department of Commerce, 14th Street and Constitution Avenue, NW., Washington, D.C. 20230, telephone: (202) 377-2438, 377-5403, or 377-5050.

**SUPPLEMENTARY INFORMATION:**

### Final Determinations

Based upon our investigations, we determine that certain benefits constituting subsidies within the meaning of section 701 of the Tariff Act of 1930, as amended (the Act), are being provided to manufacturers, producers, or exporters in Brazil of certain carbon steel products. For purposes of these investigations, the following programs are found to confer subsidies:

- Government Provision of Equity

Capital
- Government Guarantees on Long-Term Loans
- Short-Term Export Financing (Resolution 674)
- Export Financing under the CIC-CREGE 14-11 Circular
- IPI Export Credit Premium
- Funding for Expansion through IPI Tax Rebates
- CDI Program (Exemption of IPI Tax and Customs Duties on Imported Equipment)

We determine the net subsidy to be 36.48 percent *ad valorem* for COSIPA, 62.18 percent *ad valorem* for CSN, and 17.49 percent *ad valorem* for USIMINAS.

Case History

On November 10, 1983, we received petitions from the United States Steel Corporation ("U.S. Steel"), of Pittsburgh, Pennsylvania, on behalf of the U.S. industries producing hot- and cold-rolled carbon steel sheet, cut-to-length plate and plate in coils. In compliance with the filing requirements of § 355.26 of our regulations (19 CFR 355.26), the petitions allege that manufacturers, producers, or exporters in Brazil of certain carbon steel products receive, directly or indirectly, benefits constituting subsidies within the meaning of section 701 of the Act, and that these imports are materially injuring, or threatening to materially injure, a U.S. industry. U.S. Steel withdrew its petition covering hot-rolled carbon steel plate cut to length.

We found that the remaining petitions contained sufficient grounds upon which to initiate countervailing duty investigations, and on November 30, 1983, we initiated such investigations (48 FR 55012). We stated that we expected to issue preliminarily determinations by February 3, 1984.

Since Brazil is a "county under the Agreement" within the meaning of section 701(b) of the Act, injury determinations are required for these investigations. Therefore, we notified the ITC of our initiations. On December 27, 1983, the ITC determined that there is a reasonable indication that these imports are materially injuring, or threatening to materially injure, a U.S. industry (49 FR 670).

We presented a questionnaire concerning the allegations to the government of Brazil in Washington, D.C., on December 16, 1983. On January 16, 1984, we received a response to the questionnaire, followed by supplementary responses on January 24, 25, and 27, and March 9, 1984.

On February 3, 1984, we preliminary determined that benefits constituting subsidies within the meaning of the countervailing duty law were being provided to manufacturers, producers, or exporters in Brazil of certain carbon steel products (49 FR 5157). On February 28, 1984, U.S. Steel amended the petitions to allege that critical circumstances exist with respect to imports of certain carbon steel products from Brazil. On March 29, 1984, we issued a notice of "Preliminary Affirmative Determinations of Critical Circumstances" (49 FR 13726). Both petitioner and respondents filed briefs pertaining to these investigations prior to and after our preliminary determinations. In addition, the following interested parties submitted written comments: Bethlehem Steel Corporation ("Bethlehem"), and Republic Steel Corporation, Inland Steel Company, Jones & Laughlin Steel Incorporated, and Cyclops Corporation ("the Four"). We received no requests for a public hearing.

Scope of Investigations

The products covered by these investigations are hot-rolled carbon steel plate in coil, hot-rolled carbon steel sheet, and cold-rolled carbon steel sheet (certain carbon steel products), which are described in the "Product Description Appendix" attached to this notice.

There are three known producers and exporters in Brazil of certain carbon steel products to the United States. We have received information from the government of Brazil regarding Companhia Siderúrgica Paulista (COSIPA), Companhia Siderúrgica Nacional (CSN), and Usinas Siderúrgicas de Minas Gerais S.A. (USIMINAS). For purposes of these final determinations, our period of review is calendar year 1982.

Analysis of Programs

Throughout this notice, we reference general principles applied to the facts of the current investigations. These principles are described in the "Subsidies Appendix" attached to the notice of "Cold-Rolled Carbon Steel Flat-Rolled Products from Argentina; Final Affirmative Countervailing Duty Determination and Countervailing Duty Order" in this issue of the Federal Register.

In its responses, the government of Brazil provided data for the applicable period, including financial statements and debt information for COSIPA, CSN, and USIMINAS.

For purposes of these final determinations, we are calculating an *ad valorem* subsidy rate for each company. We allocated the benefits received by each respondent in 1982 over the total sales value or export value, as appropriate, of each respondent.

Based upon our analysis of the petition and the responses to our questionnaire, we determine the following:

I. Programs Determined To Confer Subsidies

We determined that subsidies are being provided to manufacturers, producers, or exporters in Brazil of certain carbon steel products under the following programs.

A. *Government Provision of Equity Capital.* Siderurgia Brasileira S.A. (SIDERBRAS) is a government-controlled corporation under the jurisdiction of the Ministry of Industry and Commerce. Pursuant to Decree Law No. 6159 of December 6, 1974, SIDERBRAS became the holding company for the federally owned steel corporations. SIDERBRAS is a majority shareholder of nine Brazilian steel producers and a minority shareholder of one small Brazilian steel producer.

During 1977-1982, SIDERBRAS provided its steel firms with funds in the form of loans, grants or equity. The amounts received include loans made to COSIPA, CSN AND USIMINAS by the Banco Nacional do Desenvolvimento Econômico e Social (National Bank for Economic and Social Development, or BNDES, formerly known as BNDE) and assumed by the Brazilian government through SIDERBRAS. These transactions are in effect debt-to-equity conversions by the government of Brazil. All funds provided to these companies are specifically for expansion projects and are not available to cover operating losses.

We have consistently held that government provision of, or assistance in obtaining capital does not *per se* confer a subsidy. Government equity purchases or financial backing bestow a countervailable benefit only when provided on terms inconsistent with commercial considerations.

For purposes of these final determinations, we conducted a comprehensive review of the companies' financial data and all other factors on the record relevant to a determination of inconsistency with commercial considerations. In order to determine whether a company was a reasonable equity investment (a condition we have termed "equityworthiness"), we focused on the rate of return on equity and long-term prospects for the companies in question for the period 1977 through 1982. We examined financial ratios, profits and losses, and other factors, such as market demand projections and

current operating results, to evaluate a company's current and future ability to earn a reasonable rate of return on equity investments.

Based on these factors, as applied to information on the record, we find COSIPA and CSN to be unequityworthy between 1977 and 1982, and USIMINAS to be equityworthy between 1977 and 1979 and unequityworthy between 1980 and 1982. Consequently, the action of the government in taking an equity position in these companies in those years is inconsistent with commercial considerations and may confer a subsidy.

To calculate the benefit, we compared the companies' rates of return on equity with the average rate of return in Brazil for the year in question. We then applied the "rate of return" shortfall to all purchases of equity that we consider to be inconsistent with commercial considerations. For these final determinations, we used the nationwide rate of return on equity in Brazil as published by *Business Latin America*. We determine the *ad valorem* benefit is 20.36 percent for COSIPA, 24.5 percent for CSN, and 3.73 percent for USIMINAS.

B. *Government Guarantees on Long-Term Loans.* With respect to loans and loan guarantees, we determined whether the companies under investigation were "creditworthy." In making these determinations, we focused on cash flow and other measures of each company's ability to meet its long-term debt obligations.

For purposes of these final determinations, we assessed the creditworthiness of COSIPA, CSN, and USIMINAS for the period 1977 through 1982. Based on the financial measurements outlined above, we find COSIPA to be uncreditworthy between 1977 and 1982, CSN to be creditworthy in 1977 and 1978 and uncreditworthy between 1979 and 1982, and USIMINAS to be creditworthy between 1977 and 1979 and uncreditworthy between 1980 and 1982.

In 1982, the government of Brazil guaranteed a debenture that was floated by USIMINAS on the Japanese market. The issuance was made in a period in which we consider USIMINAS to be uncreditworthy. To determine whether a countervailable benefit was bestowed by the guarantee, we compared the terms of the debenture with the highest terms on a debenture issuance in Japan during 1982, plus a risk premium, as outlined in the Subsidies Appendix. Our analysis showed that the loan guarantee was inconsistent with commercial considerations.

Moreover, we obtained at verification lists of long-term loans in foreign currency received by each of the three companies involved in these investigations under Resolutions 63 and 4131 of the Banco do Brasil. Because these long-term loans in foreign currency were guaranteed by the government of Brazil in years during which the companies were uncreditworthy, and evidence on the record suggests that government guarantees on foreign-currency loans are not generally available in Brazil, we used the methodology for "Loans and Loan Guarantees to Uncreditworthy Companies" described in the Subsidies Appendix to determine whether they were inconsistent with commercial considerations. Our analysis indicates that these loans were made at preferential interest rates.

SIDERBRAS also guaranteed long-term loans in cruzeiros provided by BNDES and FINAME, which are described below in sections II.B and C of this notice. Government guarantees are not countervailable if they are provided on equal terms to a wide range of industries. We have no evidence to indicate that the government of Brazil guarantees these loans only to a specific industry or group of industries. In addition, we note that the loan guarantees appear to be without effect, since the guarantor is also the lender itself. Finally, we note that, in addition to the SIDERBRAS guarantee, all BNDES loans are secured by company fixed assets to at least 130 percent of the loan value. We verified that each respondent's fixed assets were more than sufficient to cover their outstanding long-term debt, including BNDES/FINAME loans. Since even uncreditworthy companies can receive commercial interest rates on secured loans, we believe these guarantees bestow no subsidy. Therefore, because we have no information that SIDERBRAS guarantees on BNDES/FINAME loans are provided to a specific industry or group of industries, and because they do not appear to be provided on terms inconsistent with commercial considerations, we determine that SIDERBRAS guarantees of BNDES/FINAME loans do not confer a subsidy upon the products under investigation.

For loans with fixed interest rates, we applied the loan methodology for uncreditworthy companies described in the Subsidies Appendix. For our discount rate, we calculated each company's weighted cost of capital by using nationwide debt costs and rate of return on equity figures, which are described in more detail below.

We treated all loans with variable interest rates as short-term loans, and compared the principal and interest a company would pay a normal commerical lender in any given year with amounts actually repaid in that year under these loans.

For the benchmark rate, we used was the London Inter-Bank Offered Rate ("LIBOR") plus the highest observed commerical spread and the risk premium as explained in the Subsidies Appendix.

We allocated the benefits from these guaranteed loans over the total sales of the products under investigation in 1982 and calculated a subsidy of 0.20 percent *ad valorem* for COSIPA, 0.37 percent *ad valorem* for CSN, and 0.06 percent *ad valorem* for USIMINAS.

C. *Short-Term Financing (Resolution 674).* Resolution 674 financing, administered by the Carteira do Comércio Exterior (CACEX) of the Banco do Brasil, is a form of short-term borrowing to obtain working capital to purchase inputs for the production of goods destined for export. Eligibility is determined on the basis of past exports or an acceptable export plan. The amount of available financing is calculated by making a series of adjustments to the value of exports and is denominated in dollars. During the review period, the interest rate ceiling on loans obtained under the program was 40 percent. COSIPA, CSN, and USIMINAS have participated in the program.

Following CACEX approval of their applications, participants in the program receive certificates representing portions of the total dollar amount for which they are eligible. The certificates may be presented to banks in return for cruzeiros at the exchange rate in effect on the date of presentation. Use of a certificate establishes a loan obligation with a term of up to one year (360 days). Certificates must be used within 12 months of the date of issue and loans incurred as a result of their use must be repaid within 18 months of that date.

Since Resolution 674 financing is contingent on export performance, and provides funds to participants at interest rates lower than those available from commercial sources, we determine this program confers an export subsidy. To calculate the subsidy, we used as our benchmark the national average discount rate of accounts receivable, as published in *Análise/Business Trends*. All three companies demonstrated that they discounted accounts receivable to raise short-term capital.

In the past, we have used an uncompounded nominal discount rate of

accounts receivable by the Banco do Brasil as our benchmark for Resolution 674 loans. We now feel that this rate is inappropriate, since (1) compounding is necessary in order to equate the charges on a 90-day loan with an annual loan, and (2) because it is our policy to use national average benchmarks for short-term loan analysis (see the Subsidies Appendix). The national average discount rate of accounts receivable includes an average compensating balance required by Brazilian banks. The facts gathered in this investigation indicate that such compensating balances are a standard requirement for discounting accounts receivable. We have evidence that no such compensating balances are required for Resolution 674 loans.

We calculated the benefit as of the date of repayment of the laon. We applied the difference between the benchmark and the Resolution 674 rate to the amount of repayment. We allocated the resulting amount over the total value of all exports by the companies under investigation. We calculated a subsidy rate of 4.61 percent *ad valorem* for COSIPA, 22.36 percent *ad valorem* for CSN, and 1.82 percent *ad valorem* for USIMINAS.

D. *Export Financing Under the CIC-CREGE 14-11 Circular.* Under its CIC-CREGE 14-11 circular ("14-11"), the Banco do Brasil provides 180- and 360-day cruzeiro loans for export financing, on the condition that companies applying for these loans negotiate fixed-level exchange contracts with the bank. Companies obtaining a 360-day loan must negotiate exchange contracts with the bank in an amount equal to twice the value of the loan. Companies obtaining a 180-day loan must negotiate an exchange contract equal to the amount of the loan. In addition to requiring exchange contracts, the Banco do Brasil requires that these loans be fully secured by collateral, which must be traceable property. The bank normally requires that the value of collateral equal at least 130 percent of the amount of the loan. The bank also charges a commission on all such loans.

All exporters of manufactured products with production cycles of less than 180 days may apply for these loans. The maximum level of eligibility is based on the value of the applicant's exports in the previous year. Companies receiving Resolution 674 loans have a maximum elegibility of 10 percent. All others have a maximum eligibility of 15 percent.

Although this program does in certain aspects appear to operate on a purely commercial basis, respondents have not supplied sufficient data to support their assertion that commissions, exchange contract requirements and collateral requirements serve to raise the effective rates on these loans to a level of comparability with those on short-term loans from other commercial sources. Without sufficient information with which to quantify these additional charges, we must compare unadjusted rates on 14-11 loans with our commercial benchmark as the best information available. This comparison shows that the rate on 14-11 loans is below the benchmark.

COSIPA and CSN have both obtained loans under this program. COSIPA took out a 14-11 loan in 1980. Owing to a dispute between COSIPA and the Banco do Brasil, this loan was not repaid until April of 1983. We verified that the loan was repaid at the contracted interest rate plus an annual penalty fee of one percent. The penalty fee was added to COSIPA's contract rate for purposes of comparison with the benchmark. CSN's 14-11 loan was taken out in 1981 and rolled over in 1982 at the same interest rate. This was treated as two separate loans, each of which was compared to the appropriate benchmark for the period in question.

To calculate the subsidy, we compared the interest rates charged with the appropriate benchmarks and applied the difference to the principal amounts. We allocated the results over the total value of exports for COSIPA and CSN. This yielded an *ad valorem* subsidy rate of 0.33 percent for COSIPA, 0.79 percent *ad valorem* for CSN, and 0.00 percent *ad valorem* for USIMINAS.

E. *IPI Export Credit Premium.* Brazilian exporters of manufactured products are eligible for a tax credit on the Imposto sôbre Produtos Industrializados (Tax on Manufactured Products, or IPI). The IPI export credit premium has been found to confer a benefit in previous countervailing duty investigations involving Brazilian products. After having suspended this program in December 1979, the government of Brazil reinstated it on April 1, 1981, in accordance with Ministry of Finance "Portaria" (Notice) No. 270 (amended by Portaria No. 252 on November 29, 1982).

The IPI tax credit is a cash reimbursement from the government of Brazil to the exporter paid through the bank involved in the export transaction. The tax credit is based on the "adjusted" f.o.b. value of the exported merchandise, which is obtained by deducting from the invoice price of the merchandise any agent commissions, rebates or refunds resulting from quality deficiencies or damage during transit, contractual penalties, and the value of imported inputs. In order to receive the maximum export credit premium, the exporter must demonstrate that 75 percent of the value added of the merchandise originated in Brazil. If this condition is not met, the f.o.b. invoice price is reduced only by the value of the imported inputs when calculating the base upon which the IPI export credit premium is to be paid.

Subsequent to April 1, 1981, this credit premium was partially phased out in accordance with Brazil's commitment pursuant to Article 14 of the Agreement on Interpretation and Application of Articles VI, XVI and XXIII of the General Agreement on Tariffs and Trade ("the Subsidies Code"). The government of Brazil reduced the benefit from 15 percent to 14 percent on March 31, 1982; from 14 percent to 12.5 percent on June 30, 1982; and from 12.5 percent to 11 percent on September 30, 1982. This program is scheduled to be eliminated by May 1, 1985.

We have used 11 percent as the nominal rate of the IPI export credit premium for the entire period of investigation. This is consistent with our policy that we may recognize program-wide changes in a subsidy program that occur after the period of investigation but prior to the preliminary determination.

We verified information regarding the use of the IPI credit premium by COSIPA, CSN, and USIMINAS on an earned basis (as opposed to a receipt basis) for 1982. The utilization rates verified cover the IPI credit premiums accrued on all steel exports, including the products under investigation.

We multiplied the most recent nominal rate of the credit premium by the respective utilization rates of the respondents to arrive at the effective credit premium rate for each respondent, and calculated a net subsidy of 7.50 percent *ad valorem* for COSIPA, 10.78 percent *ad valorem* for CSN, and 8.71 percent *ad valorem* for USIMINAS.

F. *Funding for Expansion Through IPI Tax Rebates.* Decree Law 1547, enacted in April 1977, provides funding for approved expansion projects in the Brazilian steel industry through a rebate of the IPI, a value-added tax imposed on domestic sales. The IPI tax is an indirect tax and, as such, is passed on to the consumer. A steel company collects this tax on sales as an agent for the government, and does not pay the tax itself. Decree Law 1547 is a mechanism by which a steel company is permitted to collect funds due the government and then receive a 95 percent tax rebate. The program does not involve the rebate of

payments made from the company's own funds.

Originally, the IPI tax applied to all domestic sales transactions. In 1979, the value-added tax was eliminated except for producers in 14 industry sectors, including tobacco, automobiles, spirits and alcohol, ceramics, rubber, and steel. The tax rate is different for each of the specified industry sectors; for steel products, the value-added tax is 5 percent.

A Brazilian steel compnay may deposit 95 percent of the net IPI tax due in a special account with the Banco do Brasil. The amounts deposited are to be applied to steel expansion projects. When rebated to the firms, they constitute tax-free capital reserves that must eventually be converted into subscribed capital. COSIPA, CSN, and USIMINAS received benefits under this program from 1977 to 1981.

Under Decree Law 1843 (enacted in December 1980), the companies must now pay the full IPI tax to the government, which in turn rebates 95 percent to SIDERBRAS in the form of capital increases.

Therefore COSIPA, CSN and USIMINAS did not receive countervailable benefits directly from this program in 1982. Yet we consider the funds received by SIDERBRAS to be subsidies to its subsidiaries for those years when these companies were unequityworthy and these funds were passed on to them in the form of equity infusions (discussed in section I.A of this notice).

In order to calculate the benefit attributable to this program, we used the weighted cost of capital formula explained in the Subsidies Appendix. Since we could not find company-specific long-term debt costs for the period under investigation, we used national average debt costs as the best information available. For those years in which the companies were considered creditworthy, we used the prime interest rate, as published in Morgan Guaranty Trust's *World Financial Markets*. We chose the national average prime rate because we could find neither average commercial long-term cruzeiro interest rates nor the national average discount rate of accounts receivable (our preferred short-term interest rate). With regard to the equity variable in the weighted cost of capital formula, we used the nation average rate of return on equity, as taken from *Business Latin America* data. We weight-averaged the debt and equity variables by each company's respective debt-to-total-capitalization and equity-to-total-capitalization ratios. Using our grant methodology for rebates received through 1981, we calulated an *ad valorem* subsidy rate of 3.21 percent for COSIPA, 3.06 percent *ad valorem* for CSN, and 2.95 percent *ad valorem* for USIMINAS.

G. *The CDI Program (Exemption of IPI Tax and Customs Duties on Imported Equipment).* Under Decree Law 1428, the Conselho do Desenvolvimento Industrial (Industrial Development Council, or CDI) provides for the exemption of 80 to 100 percent of the customs duties and 80 to 100 percent of the IPI tax on certain imported machinery for projects approved by the CDI. The recipient must demonstrate that the machinery or equipment for which an exemption is sought was not available from the Brazilian producer. The investment project must be deemed to be feasible and the recipient must demonstrate that there is a need for added capacity in Brazil.

Decree Law 1726 repealed this program in 1979. Subsequently, no new projects were eligible for these benefits. However, companies whose projects were approved prior to the repeal still receive these benefits pending completion of the project.

Although in our preliminary determinations we reversed our prior findings that this program was countervailable, we ascertained at verification that receipt of this benefit is limited to projects in fourteen industries approved by the government. Based on the record of these and earlier Brazilian countervailing duty investigations, we have no evidence that this requirement does not allow the government to target benefits to particular companies. Accordingly, we determine the CDI program confers a subsidy on the products under investigation. We expensed the benefit in the year of receipt and calculated a net subsidy of 0.45 percent *ad valorem* for COSIPA, 0.37 percent *ad valorem* for CSN, and 0.22 percent *ad valorem* for USIMINAS.

## II. Programs Determined Not To Confer Subsidies

We determine that subsidies are not being provided to manufacturers, producers, or exporters in Brazil of certain carbon steel products under the following programs.

A. *Raw Materials (Iron Ore) Supplied at Government-Controlled Rates.* Petitioner alleges that Brazilian steel producers benefit from government policies that maintain domestic iron ore prices at levels sustantially below international prices. In our preliminary determinations, we found that the price controls on iron ore provided a benefit to "a specific enterprise or industry" on the basis of our belief that "the steel industry is by far the dominant user" of iron ore, and that the control led to the "provision of . . . goods at preferential rates."

Upon further investigation, we found that the price controls on iron ore apply to sales by four producers of iron ore in Brazil. The producers subject to price control consistently sell iron ore at prices that are below the set maximum prices. Producers not subject to price controls sell iron ore at even lower prices. In addition, one of the Brazilian steel mills under investigation owns its own iron ore mine. That mill produces all the iron ore it consumes, and sells its excess ore production on the open market.

Based on this information, we determine that market forces rather than government-mandated price controls set the prices of iron ore in Brazil. Therefore, we determine that the price control do not constitute the "provision of goods or services" [section 771(5)(B)(ii) of the Act] at preferential rates and do not confer a subsidy on producers of the products under investigation.

Because iron ore is not supplied at preferential rates, we need not address the issue of whether our preliminary determination that price controls on iron ore provided a benefit to a specific enterprise or industry was correct.

B. *BNDES Financing.* Long-term financing in cruzeiros is available in Brazil only through government-controlled financial institutions, such as BNDES and its subsidiary FINAME (see section II.C of this notice *infra*). BNDES provides long-term financing for the purchase of capital equipment and for expansion projects. These loans are available to private as well as state-controlled enterprises for a maximum of 20 years, and require an analysis of the economic viability of the project and the ability of the borrower to service the debt. We verified that BNDES loans were made available to a broad range of economic sectors throughout Brazil, *e.g.*, agriculture and agro-industry, capital goods, consumer goods, civil engineering, energy, infrastructure, and transportation. Therefore, we determine that BNDES loans are generally available and do not confer a subsidy.

C. *FINAME Loans.* The Agência Especial de Financiamento Industrial (Special Agency for Industrial Financing, or FINAME), a subsidiary of BNDES, provides long-term cruzeiro financing for the purchase of capital equipment manufactured in Brazil.

We verified that FINAME loans were provided to a broad range of industries throughout Brazil, such as agriculture,

chemicals, minerals, energy, electronics, pulp and paper, and transportation. Because FINAME loans are generally available, we determine they do not confer a domestic subsidy.

D. *Government Assistance in Repaying Foreign Loans (Aviso GB-588).* Aviso GB-588 is an internal government communication providing that, under certain circumstances, the government of Brazil will assume obligations on the direct dollar debt of companies unable to meet such overseas debt as it comes due. Under the program, the Banco do Brasil assumes payments due overseas lenders with funds provided by the Central Bank (Banco Central do Brasil). The assumed payments are converted into cruzeiro loans from the Banco do Brasil to the companies. The program is open to any company that has incurred such debt subject to a government guarantee. COSIPA, CSN, and USIMINAS have participated in the program.

Since the Aviso GB-588 program, one of several measures designed to deal with Brazil's overall hard currency debt problems, is available to all companies unable to meet scheduled payments on government guaranteed direct dollar debt, it does not operate to the sole benefit of any one industry or group of industries. Consequently, we consider this program to be generally available and therefore not countervailable.

E. *Rail Rate Subsidies Based on Payment in Steel.* Petitioner alleges that barter agreements, under which Brazilian steel mills pay the Rede Ferroviária Federal (Brazilian Federal Railways, or RFFSA) for freight charges with steel, result in preferential rail transport rates for Brazilian steel producers. Petitioner further alleges that Brazilian steel producers may derive independent benefits from a system of preferential rail transport rates.

Respondents acknowledge that COSIPA and CSN have concluded barter arrangements involving RFFSA, PETROBRAS (the state-owned fuel company), and INTERBRAS, PETROBRAS's trading company subsidiary. COSIPA and CSN use RFFSA to transport their products. RFFSA purchases fuel from PETROBRAS. At the time of the arrangements, COSIPA and CSN owed funds to RFFSA. RFFSA assigned its receivables due from COSIPA and CSN to PETROBRAS. This occurred at the same time INTERBRAS was interested in obtaining steel for export. COSIPA and CSN agreed to satisfy the accounts transferred to PETROBRAS by providing INTERBRAS with steel. The price to INTERBRAS for the steel was then offset against the amounts due PETROBRAS under the receivables assigned by RFFSA.

The steel products involved in these transactions were valued on the basis of current list prices plus a percentage based on estimated price increases expected to occur during the interim between the dates of contract and delivery. Subject to certain controls imposed by the government on all commercial transactions in Brazil, the price or value placed on steel sold to INTERBRAS by COSIPA and CSN was negotiated in accordance with CSN's and COSIPA's normal commercial practice. There is no evidence that these transactions have resulted in preferential rail rates for COSIPA or CSN. Aside from assigning its receivables to PETROBRAS, RFFSA has had a secondary role in those arrangements and has not received any steel for its own use. There is no indication that Brazilian steel producers derive preferential benefits through these arrangements either as a result of government direction or concessions by RFFSA.

We also found no evidence that Brazilian steel producers benefit from a system of preferential rail transport rates. Rates charged by RFFSA are published. There is no differential between export and domestic transactions. We established at verification that rail freight charges paid by Brazilian steel producers match those on the published rate tables. Consequently, we determine that Brazilian steel producers do not benefit from preferential rail rates either directly or as a result of the barter arrangement involving their accounts payable to RFFSA.

F. *Supplier Credits (Non-Indexation of Accounts Payable).* Petitioner alleges that payments to suppliers by state-owned companies in Brazil are not adjusted for inflation, and that such non-indexation of overdue accounts payable can constitute a substantial benefit in Brazil's highly inflationary economy. Respondents claim that the government of Brazil does not mandate or direct any preferential treatment for late payments by public sector companies. Instead, contracting parties freely decide whether accounts payable are to be indexed. At verification, we ascertained that certain contracts with suppliers contained a monetary correction clause and others did not. We saw no evidence of any government direction that supplier contracts not be indexed. In the absence of any evidence that non-indexation of accounts payable is mandated by the government, we determine that no countervailable benefits are bestowed to the products under investigation.

G. *Simultaneous Devaluation and Imposition of Export Taxes.* Petitioner alleges that early in 1983, the government of Brazil devalued the cruzeiro in order to stimulate exports, and concurrently imposed an export tax on a number of products in order to offset the benefits of the devaluation. Petitioner claims these joint actions constitute a selective devaluation designed to favor certain exports over others.

Although the government of Brazil announced a 30 percent "maxi-devaluation" on February 21, 1983, and subsequently adjusted several export taxes, we do not consider this to confer a countervailable benefit for two reasons.

First, in order for a selective devaluation to occur, there must be a multiple exchange rate system. There is no such system in Brazil. The devaluation included no provisions to protect certain industries or groups of industries from the effects of the devaluation.

Second, the presumption that the government applied an export tax selectively to confer a benefit requires evidence that it did so deliberately to favor the export of some products over others. Governments set tax rates for various reasons, *e.g.*, to raise revenue and to *inhibit* the export of certain goods in order to dampen upward pressure on domestic prices created by devaluation. Absent evidence that the government imposed selective export taxes purposefully to benefit selected untaxed exports, we do not consider its actions as conferring a countervailable subsidy.

H. *Certain Labor Programs.* Petitioner alleges the government of Brazil has provided assistance for the training and career development of steel industry personnel.

We verified that the government of Brazil has not provided funds or other forms of assistance for the training and career development of steel industry personnel, other than income tax deductions for employee training and meals that were determined not to confer countervailable benefits in *Carbon Steel Plate from Brazil* (48 FR 2588 (January 20, 1983)) because they are generally available. Accordingly, we determine that this program does not confer a subsidy.

I. *Certain Fiscal Incentives.* Petitioner alleges that CSN received certain "fiscal incentives" mentioned in CSN's annual report for 1982. During verification, we ascertained that these fiscal incentives

consisted of a corporate tax credit from a previous year for equity investments made by CSN in a regional airline and a regional development credit company in Brazil. This corporate tax credit is a standard deduction on Brazilian tax forms and can be taken by any company that makes equity investments in regional development projects approved by the government of Brazil. We verified that the corporate tax credit is available to all companies throughout Brazil. Therefore, we determine that the program does not confer a subsidy on the products under investigation.

J. *Certain Donations and Grants.* Petitioner alleges that CSN received certain "donations and grants" mentioned in CSN's annual report for 1982. We verified that these donations and grants consisted of a gift of furniture and medical supplies to the CSN hospital by a private foundation. Accordingly, we determine that this donation does not confer a subsidy upon the products under investigation.

K. *Electricity Used in Steel Production.* Petitioner alleges that Brazilian steel producers benefit from subsidized electricity. We verified that the respondents pay for the electricity they consume according to published, non-preferential rates. We therefore determine electric rates in Brazil do not confer a subsidy upon the products under investigation.

**III. Programs Determined Not To Be Used**

We determine that manufacturers, producers or exporters in Brazil of certain carbon steel products did not use the following programs, listed in the notice of "Initiation of Countervailing Duty Investigations." We intend to re-examine these programs during any administrative review that may occur under section 751 of the Act.

A. *Government Funds To Cover Operating Losses.* Evidence currently on the record provides no basis for determining the government of Brazil has provided funds to cover the operating losses of companies in the SIDERBRAS group. Equity infusions into respondent steel companies were provided for expansion and are addressed in section I.A., *supra.* Accordingly, we determine respondents have not benefited from government action to cover operating losses.

B. *Local Tax Incentives/Special Tax Deductions for SIDERBRAS.* In its response, the government of Brazil states that there are no local tax measures that benefit respondents. As a result of a special concession by the government, CSN was allowed to use the losses of other companies in the SIDERBRAS group to offset its profits for income tax purposes in 1980. The government conceded this special dispensation to compensate for the fact that within the SIDERBRAS group. Some companies consistently incur losses while other are profitable. However, such benefits received by CSN on its 1980 earnings extended only through 1981, because these are tax benefit that would be allocated solely to the year of receipt. This concession was repealed shortly thereafter and this program no longer exists. Accordingly, we determine that this program was not used by respondents during the period for which we are measuring subsidization.

C. *Export Profits exemption from Corporate Income Tax.* Pursuant to Decree Laws 1158 and 1721, exporters of certain carbon steel products are eligible to participate in this program which exempts a portion of profits attributable to export revenue from income tax. We verified that, since respondents either reported no taxable income or were unprofitable during the period for which we are measuring subsidization, they were not in a position to take advantage of this program. Therefore, we find no countervailing benefits to respondents during the period of investigation.

D. *Accelerated Depreciation for Equipment.* Pursuant to Decree Law 1137, any company which purchases Brazilian-made capital equipment and has an expansion project approved by the CDI may depreciate this equipment at twice the rate normally permitted under Brazilian tax laws. We verified that none of the respondents availed themselves of this program.

E. *Resolution 330 of the BCB.* BCB Resolution 330 provides financing for up to 80 percent of the value of the Merchandise placed in a specified bonded warehouse and destined for export. Exporters of certain carbon steel products would be eligible for financing under this program. However, COSIPA, CSN, and USIMINAS did not use this program because the companies manufactured products to order during the review period and such products were not placed in bonded warehouses. Accordingly, we determine that respondents did not use this program during the period for which we are measuring subsidization.

F. *The BEFIEX program.* The Commissão para a Concessão de Benefícios Fiscais a Programas Especiais de Exportação (Commission for the Granting of Fiscal Benefits to Special Export Programs, or BEFIEX) is authorized by Decree Law 77065 to reduce by 70 to 90 percent import duties and the IPI tax on the importation of machinery, equipment, apparatus, instruments, accessories and tools necessary for special export programs approved by the Ministry of Industry and Trade. Further, imports of components, raw materials and intermediary products may benefit from a reduction of 50 percent of import duties and IPI.

We verified that none of the respondents receives benefits through this program. Most of the merchandise produced by the respondents is sold in Brazil, and they are not able to make the required export commitments. Moreover, receipt of fiscal incentives under CDI program described *supra* makes a company ineligible for BEFIEX incentives.

G. *Apôio à Exportação (PROEX).* Petitioner alleges that a new line of short-term credit for exports was established under the Apôio à Exportação (PROEX) program of BNDES. We found no evidence that the respondents have participated in this program during the period for which we are measuring subsidization.

H. *Incentives For Trading Companies.* Petitioner alleges that CSN and USIMINAS distribute their export sales through such intermediaries as trading companies, and that under Resolution 643 of the BCB, trading companies can obtain export financing similar to that obtained by manufacturers under Resolution 674. We verified that none of the products under investigation was exported by trading companies during the period in investigation.

I. *Raw Materials (Charcoal and Slab) Supplied at Perferential Rates.* 1. *Charcoal.* Petitioner alleges that the government of Brazil has given fiscal incentives to encourage the expansion of charcoal production through reforestation. we ascertained during our verification that the Brazilian steel industry does not use wood charcoal in the steel production process.

2. *Slab.* Petitioner also alleges that Brazilian producers of hot- and cold-rolled sheet and plate in coil will soon be using subsidized slab from SIDERBRAS' Tubarao mill. We verified that neither COSIPA, CSN, nor USIMINAS purchased slab from the Tubarao mill during the period of investigation.

J. *Construction of Ports.* Petitioner alleges that Brazil's Third National Development Plan (1980–85) provides for the construction of a port at Praia Mole designed mainly for the export of steel products and the imports of coal.

During verification, despite our repeated requests, we were unable to obtain any sort of documentation on the Praia Mole port. However,

documentation submitted after verification by Bethlehem confirms the allegation in the petition. According to this documentation, the Praia Mole facility is located at Ponta Tubarão near Vitória in the state of Espírito Santo. Its purpose is to allow the Companhia Siderúrgica de Tubarão (CST), Açominas, and USIMINAS to import coal and export iron ore and steel. This documentation also indicates that Praia Mole, which is currently about half-completed, was not used for the importation of coal before May 1983 or for the exportation of steel before December 1983. Accordingly, we determine no countervailable benefits were bestowed upon the products under investigation during the period for which we are measuring subsidization.

K. *Certain Labor Programs for Employees of State Enterprises.* Petitioner alleges that the government of Brazil has restricted fringe benefits and pay levels of public employees, and that these restrictions confer a countervailable benefit on steel products manufactured in Brazil by state-owned companies.

Since Decree Laws 2036 and 2100 establishing these programs were not in effect during the period for which we are measuring subsidization, they fall outside the scope of this investigation.

L. *The CIEX Program.* Decree Law 1428 authorizes the Comissão para Incentivos à Exportação (Commission for Export Incentives, or CIEX) to reduce import taxes and the IPI tax up to 10 percent on certain equipment for use in export production. During verification, we ascertained this program serves the same purpose as the BEFIEX program, but is aimed at small companies with low production and trade volumes. Respondents demonstrated that they received similar benefits under the CDI program, which disqualifies them from receiving CIEX benefits. Accordingly, we determine none of the respondents received benefits under this program.

M. *Resolution 68 (FINEX) Financing.* Resolution 68 of the Conselho Nacional do Comércio Exterior (CONCEX) provides that CACEX may draw upon the resources of the Fundo de Financiamento à Exportação (FINEX) to extend export loans to foreign buyers of Brazilian goods. The loans are denominated in dollars and have a minimum term of 180 days. FINEX financing is arranged through an exporter, who must demonstrate that the foreign buyer has pre-paid at least 15 percent of the invoice price of the goods in question. The exporter receives the cruzeiro equivalent of the loan to the foreign buyer at the exchange rate prevailing on the date these funds are received. When the loan comes due, the lending bank receives the principal plus interest in dollars directly from the foreign buyer. The bank also retains any cruzeiro gains resulting from exchange rate fluctuations.

Though Resolution 68 loans are apparently intended primarily to facilitate export sales to developing countries or non-traditional markets, we identified one such loan made in relation to the sale by USIMINAS of a product under investigation to a U.S. buyer. However, the due date for repayment of this loan fell outside the period of review. Since FINEX financing provides loans for export purposes at rates lower than those for comparable commercial loans, this loan should be examined during any administrative review that may occur under section 751 of the Act.

## IV. Export Taxes

On March 13, 1984, the government of Brazil informed us that it had imposed a 27.42 percent export tax on the products under investigation. The government of Brazil requested that any subsidy found in the final determination be offset by this export tax, if the Department would not agree to enter into a suspension agreement covering these products.

Because this export tax was imposed outside the period of investigation and after the preliminary determinations, it has no effect on the net subsidy amount. We may take into account any export taxes paid before the final determination for purposes of setting the cash deposit only. In this case, because of the late imposition of the export tax, we were unable to verify that it was paid. Consequently, we are not taking it into account in setting the cash deposit rate. We will consider it, however, during any administrative review that may occur under section 751 of the Act.

The government of Brazil has requested that we offset the net subsidy by the amount of the export tax on plate in coil imposed under the terms of the suspension agreement on carbon steel plate. We verified that this export tax was not paid during the period of investigation; therefore, it has no effect on the net subsidy amount. Because we are proposing to terminate the suspension agreement on carbon steel plate, we do not believe it is appropriate to take the export tax into account for cash deposit purposes.

Also, we are concerned that, under past subsidy agreements, Brazil has not always collected required export taxes on time. Such past non-collection casts doubt on Brazil's future timely collections of export taxes. Second, the Brazilian press has reported that the 27.42 percent export tax "would be ploughed back into the domestic steel industry to help finance expansion and modernization programs." Such reports raise concern that even if collected, export taxes may be funneled back to Brazilian steel companies. In our next administrative review under section 751 of the Act, we will consider whether or not to allow an export tax offset. In making such determination, we will consider, among other factors, whether the export tax has been paid, the timeliness of payment, and whether the payments have been funneled back into the steel industry.

### Petitioner's Comments

*Comment 1:* Petitioner argues that iron ore produced internally in integrated facilities provides the same subsidy as iron ore subject to government-controlled prices since the transfer price is the same as the controlled price.

*DOC Response:* Assuming *arguendo* that petitioner's theory is correct, because we found that government-mandated price controls do not confer a subsidy, the internal transfer of iron ore at similar prices does not confer a subsidy.

*Comment 2:* Petitioner contends that the method we used in our preliminary determinations to calculate the nationwide rate of return on equity was based incorrectly on the average change in stock market yield indices and ignores payment of dividends.

*DOC Position:* In our preliminary determinations, we relied on the average change in stock market yield indices as best information available. For purposes of our final determinations, we have used the average rate of return on equity in Brazil for our calculations.

*Comment 3:* Petitioner asserts that the Department should have used the average rate of return on equity for major Brazilian firms compiled by *Moody's* as the nationwide rate of return on equity.

*DOC Position:* We decided to use the nationwide average rate of return on equity excerpted from *Business Latin America* because it is much broader-based than the rate compiled by *Moody's. Moody's* rate is an average of the rates of return on equity of 47 blue-chip Brazilian firms, whereas *Business Latin America* publishes a national average rate of return on equity for all industries.

*Comment 4:* Petitioner argues that the Department should not use ORTN [1] to

[1] ORTN = Obrigações Reajustáveis do Tesouro Nacional (Readjustable Bonds of the National Treasury)

adjust certain subsidy amounts expressed in real terms, because the rate of increase of ORTN significantly understates inflation.

*DOC Position:* It is irrelevant whether the ORTN adjustment rate is a true reflection of inflation in Brazil, because this index is universally used in that country for "monetary correction" purposes and represents the normal commercial practice of that country. Consequently, we used the ORTN adjustment rate whenever we were comparing data expressed in real terms with ORTN-adjusted data.

*Comment 5:* Petitioner contends that the fact that private lenders in Brazil are unwilling to make long-term cruzeiro loans demonstrates that BNDES loans were made on terms inconsistent with commercial considerations.

*DOC Position:* Because BNDES loans are generally available, we need not address the issue of their commercial soundness.

*Comment 6:* Petitioner argues that we should use rolled-over short-term cruzeiro interest rates as a benchmark for long-term loans in cruzeiros.

*DOC Position:* Since we determine that BNDES/FINAME loans are generally available, we do not have to address whether these loans are made at non-commercial rates.

*Comment 7:* Petitioner argues that the benchmark for Resolution 674 loans should properly be the commercial interest rate for short-term working capital loans.

*DOC Position:* In this and other cases involving Brazilian products, we have verified that trade bill discounts represent the primary means in Brazil for obtaining short-term working capital loans. Therefore, we have used the average short-term trade bill discount rates for Brazil published by *Análise/ Business Trends* as our benchmark for short-term loans.

*Comment 8:* Petitioner asserts that by using the proration method (as opposed to the payment method), the Department significantly understated the benefit from Resolution 674 financing.

*DOC Position:* As discussed in section I.C of this notice, we have calculated the benefits from this program as of the date of repayment.

*Comment 9:* Petitioner argues that if the Department's policy is to take into account program-wide changes after the period of investigation that are favorable to respondents (such as the decrease in the nominal rate of the IPI export credit premium), it should also take into account changes that are unfavorable to respondents, such as purchases of subsidized slab from the Tubarão steel mill by CSN and USIMINAS.

*DOC Position:* As a general rule, we may take into account program-wide changes which occur after the period of investigation and before the preliminary determination if we have verified information on the change and the magnitude of the resulting subsidy. We have verified the decrease in the nominal rate of the IPI export credit premium, and have information, such as domestic slab usage, necessary for our subsidy calculations. We do not have verified information to take into account other changes, such as the change in the Resolution 674 interest rate, and the purchase of allegedly subsidized slab from Tubarão.

*Comment 10:* With respect to the Aviso GB–588 program, petitioner contends the Department should assume that respondents are not making any principal or interest payments on their loans.

*DOC Position:* Since we found this program to be generally available, we do not need to address the issue of repayment.

**Respondents' comments**

*Comment 1:* Respondents argue that the Department should have entered into a suspension agreement with the government of Brazil when the latter imposed an export tax on the products under investigation in the amount of the estimated net subsidy after the preliminary determinations.

*DOC Position:* Under secion 704 of the Act, we have discretion to enter into a suspension agreement only if we find that suspension of the investigation is in the public interest and effective monitoring by the United States is practicable. The legislative history of the Act stresses that sus pension "is an unusual action which should not become the normal means of disposing of cases" [*S. Rep. No. 96–249, 96th Cong., 1st Sess. 54 (1979)*]. Moreover, we recently proposed to terminate two export tax suspension agreements with Brazil, largely because the government did not collect the required export taxes for up to five months [49 FR 11864 (March 28, 1984)]. Under these circumstances, we exercised our discretion not to enter into an export tax suspension agreement.

*Comment 2:* Respondents argue that since the IPI export credit premium will terminate in April 1985, we should include in our final determinations instructions to adjust the deposit rates downward on goods exported after that date.

*DOC Position:* We cannot take into account program-wide changes that have not yet been implemented. When the phaseout of the IPI export credit premium actually takes place, we will take it into account in any administrative review that may occur under section 751 of the Act.

*Comment 3:* The Department should take into account the reduced value of the IPI export credit premium to the respondents because of sometimes lengthy delays incurred in receiving this benefit.

*DOC Position:* Under section 771(6)(B) of the Act, an offset is allowed for "any loss in the value of the subsidy resulting from its deferred receipt, if the deferral is mandated by Government order." In the case of the IPI export credit premium, no such government mandate exists. Delays in a company's receipt of IPI credits are purely administrative, frequently the result of a company's tardy application for the benefit. No offset is allowed in such a case.

*Comment 4:* Respondents argue, with reference to IPI tax rebates for capital investments, that the rebate or elimination of an industry-specific tax such as the IPI constitutes a generally available benefit and therefore does not confer a subsidy.

*DOC Position:* Not all steel companies receive this rebate. Although the same level of IPI tax is applicable to all steel products, only companies producing certain priority products and whose expansion projects are government-approved can receive the rebate. Fabricators of steel products, such as pipe and tube manufacturers who purchase coil, are not eligible for the rebate. COSIPA, CSN, and USIMINAS themselves have not been eligible for the rebates since December 1980, when Decree Law 1843 directed that rebates of the IPI tax collected on sales by state-owned steel companies accrue to SIDERBRAS. Therefore, the rebates are not generally available and constitute a selective benefit to targeted producers.

*Comment 5:* Respondents argue that since IPI tax rebates for capital investment are paid only on goods sold in the domestic market, no products exported to the United States benefit from the rebate and therefore no subsidy is conferred.

*DOC Position:* We disagree. That the rebates are generated by domestic sales only does not alter the fact that they benefit all production, including exports.

*Comment 6:* Respondents contend that since IPI tax rebates are provided in the form of capital contributions and may not be used to cover losses or pay dividends, the Department should treat them as equity infusions made on terms not inconsistent with commercial considerations.

*DOC Position:* Prior to December 1980, IPI tax rebates flowed directly to the companies in the form of grants; we therefore treated them as grants. After December 1980, the rebates went directly to SIDERBRAS for purposes of increasing its capital investments in steel companies. We treated all equity infusions from SIDERBRAS into the steel companies as equity purchases, to which we applied our equity methodology (see section I.A of this notice).

*Comment 7:* Regarding IPI tax rebates, respondents argue that the Department, in its preliminary calculations, overestimated the net subsidy in calculating a "real rate of return" by comparing the ORTN adjustment rate to the prime rate for short-term borrowing. Such a "real rate of return," it is alleged, does not reflect verified long-term cruzeiro loan rates or the Department's own information on rates of return.

*DOC Position:* Because there is no commercial market for long-term loans in Brazil, we must turn to short-term interest rates in constructing our weighted cost of capital. This short-term rate must be expressed in the same terms (real or nominal) as the rate of return on equity. Since the rate of return on equity is expressed in real terms, the interest rate must be adjusted likewise.

*Comment 8:* Respondents contend we should take into account the increase of the interest rate on Resolution 674 financing to ORTN plus up to three percent, which was enacted in compliance with IMF requirements.

*DOC Position:* To calculate a change in interest rate of a preferential loan program that occurred after the period of investigation, we need concurrent information on benchmark interest rates. We asked respondents for this information, but they did not submit it in time for us to take into account the change in the Resolution 674 interest rate.

*Comment 9:* Respondents contend that the Imposto Sôbre Operações Financeiras (IOF) is an indirect tax on the production of goods for export, that the exemption of loans under Resolution 674 from this tax is not a subsidy, and that if we determine that Resolution 674 financing provides a subsidy, we should consider this exemption as part of that subsidy.

*DOC Position:* We disagree. The IOF is an indirect tax paid on domestic financial transactions. However, this fact is not relevant. Since we are considering the discounting of a cruzeiro-denominated receivable, a transaction upon which the IOF is paid, as the commercial alternative to Resolution 674 loans, it is entirely appropriate that we include the exemption of Resolution 674 loans from the IOF as part of the subsidy in order to measure the full benefit provided under this program.

*Comment 10:* Respondents argue that the Department mistakenly considered Resolution 68 (FINEX) financing to confer a subsidy since the terms of this financing are not inconsistent with commercial considerations.

*DOC Position:* For the reasons explained in section III.M of this notice, we will examine this issue during any administrative review that may occur under section 751 of the Act.

*Comment 11:* Respondents contend that government loan guarantees did not result in preferential rates on long-term loans contracted by respondents or on debentures floated on the international financial markets.

*DOC Position:* We disagree. During the period in which respondents were found to be uncreditworthy, government loan guarantees enabled these companies to take out long-term loans in foreign currencies or float debentures in international financial markets on terms inconsistent with commercial considerations.

*Comment 12:* Respondents argue the Department erred in finding government equity infusions in the Brazilian steel companies to be inconsistent with commercial considerations by focusing on a restricted number of financial ratios and ignoring the broader industrial and financial context in which these companies operate.

*DOC Position:* In making our final determinations of equityworthiness for COSIPA, CSN, and USIMINAS, we reviewed all pertinent information on the record, including that provided by the respondents during verification in support of their claims that the companies should be considered creditworthy and equityworthy. This information included the financial statements for the relevant time periods as well as reports and projections pertaining to the companies' operations.

In arriving at these determinations, we considered all factors on the record that had a bearing on the past, current, and future financial operations of the respondents. Such factors, where available, included the overall market demand for steel, factory productivity, the progress of expansion programs, plant capacity utilization, financial resources, management assessments, and effects of inflation on operations.

In developing the appropriate financial ratios and judging of the results of these ratios, we again took into account the relevant factors. After we examined all these factors, we gave primary consideration to the rate of return on equity for prior periods as well as projected rates of return in making our equityworthiness determinations.

*Comment 13:* Respondents submit that a review of the performance of each of the respondents over the past 15 years demonstrates a history of profitability, losses being the exception rather than the rule.

*DOC Position:* Although the three companies earned some profits between 1967 and 1977, all three showed very low or negative profits from 1977 onwards. Since a private invester will focus on a company's most recent performance as an indication of future earning trends, we considered the more recent years to be more important to our analysis of equityworthiness. Moreover, a demonstration of profits or earnings alone is not sufficient for a company to be equityworthy. The rate of earnings per unit of equity, and not the absolute level of earnings, is a far more important determinant of a company's performance. In our equity methodology, we place much greater weight on the rate of return on equity than the absolute level of profits or losses.

*Comment 14:* Respondents argue that once an investment project is initiated, a company cannot halt its expansion plan because of temporary economic conditions lest it lose its initial investment.

*DOC Position:* We agree that temporary economic fluctuations should not affect the reasonableness of an equity investment, as long as a company is strong enough to ride out these fluctuations. However, the evidence on the record suggests that the three companies' performance is largely the result of more permanent changes in conditions, such as worldwide overcapacity in steel, price controls on domestic sales of steel, and weak financial conditions of the companies. In such situations, we consider that further equity investments in these companies were inconsistent with commercial considerations.

*Comment 15:* Respondents submit that the Department cannot use the same standard of equityworthiness when analyzing a company in a period of expansion as when considering an outdated mill going through a period of contraction.

*DOC Position:* Although a private investor may be willing to wait longer for a return on investment in an expanding company, he will eventually require a reasonable rate of return in relation to other investment opportunities in that country. Indeed, because he may see no return in earlier

years, he will expect a higher rate of return in later years. Given the conditions mentioned in Respondents' Comment 14, it does not appear that the three companies would be able to generate a reasonable rate of return within a reasonable period at the time some of the government equity infusions were made.

*Comment 16:* Respondents submit that the government of Brazil does not provide budget contributions or other funding for the CIC–CREGE 14–11 program, which generates sufficient revenues to cover its long-term operating costs. Respondents therefore contend that, under Annex A of the Subsidies Code, paragraphs (j) and (k), this program does not confer a subsidy.

*DOC Position:* As discussed in section I.D of this notice, we determine that program is countervailable. Our determination is based primarily on respondents' failure to provide sufficient information to verify that the program does not provide preferential loans to exporters and covers its long-term operating costs. Moreover, our uniform practice on this issue has been to calculate the subsidy provided under a preferential loan program by comparing the preferential rate to the commercially available rate, rather than to the cost of the funds to the government. As previously stated in our "Notice of Final Affirmative Countervailing Duty Determination" regarding *Ceramic Tile from Mexico* (47 FR 20012), "(r)egardless of what effects the Illustrative List of Export Subsidies may have on U.S. law otherwise, the uniform past practice on this issue in comparison with the legislative history of the Trade Act requires us to calculate the bounty or grant provided under a preferential loan program on the basis of a comparison between the preferential rate and the commercially available rate rather than on the basis of a comparison with the cost of funds to the government."

*Comment 17:* Respondents suggest that the building of infrastructure, such as the port at Praia Mole, is a normal government function and cannot confer a subsidy.

*DOC Position:* Since the port facilities at Praia Mole were not used during the period of investigation, the issue is moot. We reserve the right to reexamine Brazilian government involvement in the construction of the Praia Mole port in any administrative review that may occur under section 751 of the Act.

**Comments by Interested Parties**

*Comment 1:* The Four argue that certain accounting practices followed by the Brazilian steel companies in their financial statements are not in accordance with generally accepted accounting principles in the United States, and that such practices give a misleading picture of the respondents' financial health by overvaluing assets and profits and undervaluing liabilities and losses.

*DOC Position:* We accepted the financial statements of the respondents, which were presented in accordance with the generally accepted accounting principles in Brazil. These statements, which were audited by independent accounting firms, were used in determining the creditworthiness and equityworthiness of the three companies.

Although the financial statements were not prepared in accordance with U.S. accounting principles, we analyzed the financial reporting practices in Brazil, and found them to be reasonable given the high rate of inflation in that country.

*Comment 2:* The Four argue that government equity infusions in the Brazilian steel companies should be countervailed as grants to cover operating losses.

*DOC Position:* This issue is moot as we are countervailing government equity infusions in the companies under investigation during the period in which they were found to be unequityworthy. To countervail the very same funds under the heading of loss coverage would be double counting. See also the DOC Position on Comment 14 to the Subsidies Appendix.

*Comment 3:* Bethlehem contends that if the Department persists in using the discount of accounts receivable rate as benchmark for the Resolution 674 financing, it should add an appropriate risk premium to the effective rate.

*DOC Position:* As stated in the Subsidies Appendix, we do not believe it is appropriate to add a risk premium to short-term loan benchmarks.

*Comment 4:* The Four oppose the Department's use of the Banco do Brasil's discount of accounts receivable rate as the benchmark for Resolution 674 export financing because it is lower than the rate of inflation in Brazil.

*DOC Position:* For short-term loans, we use an appropriate national average commercial benchmark, regardless of its position relative to the rate of inflation in the country involved. We note that, especially in highly inflationary economies, real interest rates have been negative at times.

*Comment 5:* With respect to the Aviso GB–588 program, Bethlehem argues that respondents are unlikely to repay their foreign loans, as all three companies lack sufficient current assets to meet their current debts. Bethlehem argues, therefore, that the Department should treat these loan moratoria as grants.

*DOC Position:* Since we determined this program to be generally available, we do not need to address this issue.

*Comment 6:* With respect to the Aviso GB–588 program, Bethlehem contends that "repayment" provision must be excluded from the calculation of each company's rate of return for purposes of calculating the subsidy arising from government equity infusions.

*DOC Position:* Since we determine this program to be generally available, we do not need to address this issue.

*Comment 7:* Should the Department persist in using the loan methodology for the Aviso GB–588 program, Bethlehem maintains that the appropriate benchmark is the highest effective short-term interest rate plus a risk premium.

*DOC Position:* Since we determine this program to be generally available, we do not need to address this issue.

*Comment 8:* The Four object to the Department's subtraction of an inflation index from the interest rate to calculate the discount rate for Brazil, since the effective cost of money includes the anticipated inflation rate.

*DOC Position:* We subtracted the ORTN adjustment rate from the nominal interest rate to make our initial calculations in real terms. We adjusted these figures to nominal terms in the second step of our calculations using the ORTN adjustment rate.

*Comment 9:* Bethlehem and the Four argue that the Department's risk premium for Brazil was grossly understated, which led to a preliminary finding that USIMINAS's 1982 Japanese debenture was not floated on non-commercial terms despite a government guarantee. Bethlehem suggests the Department should have used Brazilian rather than Japanese debenture rates.

*DOC Position:* For purposes of these final determinations, we have based our analysis of this program on Japanese debenture rates and the risk premium outlined in the Subsidies Appendix. Using this methodology, we found that the loan guarantee of the yen-denominated debenture was inconsistent with commercial considerations. The debenture in question was denominated in yen and floated in Japan. We compared this debenture with other yen-denominated debentures in Japan, in keeping with our long-standing practice of taking a benchmark from the country in which the loan was made, whenever possible (see the Subsidies Appendix for our policy on benchmarks for foreign loans).

*Comment 10:* Bethlehem argues that Brazilian steel producers benefit from

preferential rail rates on bulk shipments of iron ore.

*DOC Position:* Since no allegation concerning preferential rail rates on bulk shipments of iron ore was received prior to the preliminary determinations, we did not include it in our investigations. This matter should be addressed in any subsequent review that may occur under section 751 of the Act.

*Comment 11:* Regarding Resolution 330 financing for export warehousing, Bethlehem contends that contrary to their assertions, respondents must have warehoused steel for export because of bad weather in Brazil which allegedly delayed export shipments by three to five weeks.

*DOC Position:* We saw no evidence at verification that such warehousing took place, or that loans under this program were received by the companies under investigation.

*Comment 12:* Bethlehem asserts that because exports of steel from Brazil by trading companies surged in 1983, it is reasonable to assume that some exports of Brazilian steel to the U.S. benefited from incentives to trading companies.

*DOC Position:* Since our period of investigation is 1982, the issue need not be addressed until any administrative review that may occur under section 751 of the Act.

## Verification

In accordance with section 776(a) of the Act, we verified all the information used in making our final determinations.

## Suspension of Liquidation

In accordance with section 703(d) of the Act, on February 10, 1984, we instructed the U.S. Customs Service to suspend liquidation of all entries of certain carbon steel products from Brazil (49 FR 5157). On March 29, 1984, because we issued a notice of "Preliminary Affirmative Determinations of Critical Circumstances" (49 FR 13726), we retroactively ordered the suspension of liquidation to November 12, 1983. As of the date of publication of this notice in the Federal Register, the liquidation of all entries, or withdrawals from warehouse, for consumption of this merchandise will continue to be suspended and the Customs Service shall require an *ad valorem* cash deposit or bond for each such entry of this merchandise as follows:

| Manufacturer/producer/exporter | *Ad valorem* rate (percent) |
|---|---|
| COSIPA | 36.48 |
| CSN | 62.18 |
| USIMINAS | 17.49 |
| All other manufacturers/producers/exporters | 36.95 |

This suspension will remain in effect until further notice.

## Final Affirmative Determination of Critical Circumstances

Where, as in this case, petitioners have alleged the existence of critical circumstances, section 705(a)(2) of the Act requires us to include in our final determination "a finding as to whether—(A) the subsidy is inconsistent with the Agreement, and (B) there have been massive imports of the class or kind of merchandise involved over a relatively short period."

A. *Consistency with the Subsidies Code.* We have determined that the government of Brazil provides export subsidies on the merchandise under investigation. As we noted in our preliminary determinations of critical circumstances (49 FR 13726), Article 9 of the Subsidies Code prohibits the use of export subsidies on non-primary products. When given by developed countries, such subsidies are inconsistent with the Subsidies Code and are actionable under its dispute settlement provisions. However, Article 14 provides an exception for developing countries, provided they do not use "export subsidies on their industrial products . . . in a manner which causes serious prejudice to the trade or production of another signatory" (Article 14 § 3). For a developing country like Brazil, then, the issue is whether we find export subsidies causing "serious prejudice" to U.S. steel trade or production. Under section 771(7)(C)(iii) of the Act, the ITC evaluates all relevant economic factors bearing on the state of the industry, including actual and potential decline in output, sales, market share, profits, productivity, return on investment, and capacity utilization. Thus, in making its preliminary and final injury determinations, the ITC considers trade and production in the United States. We conclude that, in principle, serious prejudice can exist where material injury to a U.S. industry occurs by reason of imports benefiting from export subsidies.

Based upon the information in the record and the ITC's affirmative preliminary determination of December 27, 1983, we conclude that serious prejudice exists within the meaning of Article 14 § 3 [if the ITC's final determination should be negative, our critical circumstances finding will become moot; in any event, under section 705(a)(4)(A) of the Act, the ITC must make its own affirmative determination of critical circumstances to effect our affirmative finding]. Therefore, we find that Brazil's export subsidies on certain steel products are inconsistent with the Subsidies Code.

We stress that this finding is limited to the facts of these cases and the application of Article 14 § 3 of the Subsidies Code. This finding draws no conclusion, and none should be inferred, with respect to the commitment made by the government of Brazil under Article 14 § 5 of the Subsidies Code. Under Article 14 § 5, developing countries are urged to "enter into a commitment to reduce or eliminate export subsidies when the use of such export subsidies is inconsistent with its competitive and development needs." Article 14 § 6 precludes any signatory from taking countermeasures pursuant to the provisions of Parts II and VI of the Subsidies Code against any export subsidies of such developing country, to the extent that the subsidies in question are covered by a commitment made under Article 14 § 5.

Parts II and VI of the Subsidies Code concern notification of subsidies and international dispute settlement. Significantly, Article 14 § 6 does not affect actions taken under Part I of the Subsidies Code, concerning domestic countervailing duty proceedings.

We have considered comments provided by counsel for respondents, and consulted with the Office of the United States Trade Representative. We concluded that, as a matter of law, we may find a developing country's export subsidies that cause "serious prejudice" to be inconsistent with Article 14 §3 and, therefore, the Subsidies Code, for purposes of our critical circumstances determination. We again note that our finding does not indicate any view regarding Brazil's commitment under Article 14 §5 of the Subsidies Code.

B. *Massive Imports.* Information on the record indicates that imports of the merchandise under investigation have increased dramatically. In considering this question, we compared the monthly average of imports from Brazil during the period of July through October 1983, with the monthly average of imports for the period of November 1983 through January 1984, the three months between our receipt of the petition and our preliminary determinations. These comparisons show that the import volume of hot-rolled plate in coil increased by 316 percent, hot-rolled

sheet increased by 84 percent, and cold-rolled sheet increased by 22 percent.

Normally, we would also analyze imports from prior years in order to determine whether increased imports over a short period could be attributable to factors such as seasonal flows and, therefore, may not constitute massive imports over a short period of time for the purposes of section 705(a)(2). In this case, we have not done so because Brazil is a comparatively new entrant in the U.S. market with consequently low levels of exports of these products to the U.S. in 1981 and 1982.

Based on our comparisons of figures for the periods set forth above, we are persuaded that there have been massive imports of hot-rolled carbon steel plate in coil, hot-rolled carbon steel sheet, and cold-rolled carbon steel sheet over a short period of time.

For the reasons discussed above, we find that critical circumstances exist within the meaning of section 705(a)(2) of the Act. We note that, pursuant to section 705(b)(4) the ITC makes its own determinations regarding critical circumstances. Therefore, pending the ITC's final determination, the suspension of liquidation of entries for a period of 90 days prior to our preliminary determinations shall remain in effect.

## ITC Notification

In accordance with section 705(d) of the Act, we will notify the ITC of our determinations. In addition, we are making available to the ITC all non-privileged and non-confidential information relating to these investigations. We will allow the ITC access to all privileged and confidential information in our files, provided the ITC confirms that it will not disclose such information, either publicly or under an administrative protective order, without the written consent of the Deputy Assistant Secretary for Import Administration.

The ITC will make its determination whether these imports are materially injuring, or threatening to materially injure, a U.S. industry within 45 days of the publication of this notice.

If the ITC determines that material injury or the threat of material injury does not exist, this proceeding will be terminated and all estimated duties deposited or securities posted as a result of the suspension of liquidation will be refunded or cancelled. If, however, the ITC determines that such injury does exist, we will issue an countervailing duty order, directing Customs officers to assess a countervailing duty on certain carbon steel products from Brazil entered, or withdrawn from warehouse, for consumption after the suspension of liquidation, equal to the net subsidy amount indicated in the "Suspension of Liquidation" section of this notice.

This notice is published pursuant to section 705(d) of the Act (19 U.S.C. 1671d).

Dated: April 18, 1984.

William T. Archey,

*Acting Assistant Secretary for Trade Administration.*

## Product Description Appendix

For purposes of the investigations:

1. The term *"carbon steel plate in coil"* covers the following hot-rolled carbon steel products. Hot-rolled carbon steel plate in coils is a flat-rolled carbon steel product in coils, 0.1875 inch or more in thickness and over 8 inches in width, currently provided for in item 607.6610 of the *Tariff Schedules of the United States, Annotated (TSUSA).*

2. The term *"hot-rolled carbon steel sheet"*[1] covers the following hot-rolled carbon steel products. Hot-rolled carbon steel sheet is a flat-rolled carbon steel product, whether or not corrugated or crimped and whether or not pickled; not cold-rolled; not cut, not pressed, and not stamped to non-rectangular shape; not coated or plated with metal; 0.1875 inch or more in thickness and over 8 inches in width and pickled, as currently provided for in item 607.8320 of the TSUSA; or under 0.1875 inch in thickness and over 12 inches in width, whether or not pickled, as currently provided for in items 607.6710, 607.6720, 607.6730, 607.6740, or 607.8342 of the *TSUSA.* Please note that the description of hot-rolled carbon steel sheet includes some products classified as plate in the *TSUSA.*

3. The term *"cold-rolled carbon steel sheet"*[1] covers the following cold-rolled carbon steel products. Cold-rolled carbon steel sheet is a flat-rolled carbon steel product, whether or not corrugated or crimpled, whether or not painted or varnished and whether or not pickled; not cut, not pressed and not stamped to non-rectangular shape; not coated or plated with metal; or 12 inches in width, and 0.1875 or more in thickness, as currently provided for item 607.8320 of the *TSUSA;* or over 12 inches in width and under 0.1875 inches in thickness; as currently provided for in items 607.8350, 607.8355, or 607.8360 of the *TSUSA.* Please note that the description of cold-rolled carbon steel sheet includes some products classified as "plate" in the *TSUSA.*

[FR Doc. 84-11237 Filed 4-25-84; 8:45 am]

BILLING CODE 3510-DS-M

[1] "Sheet" is a generic term used in the steel industry for certain flat-rolled products. We have used the terms "hot-rolled carbon steel sheet" and "cold-rolled carbon steel sheet" for purposes of clarity. These products are also known as "hot-rolled carbon steel flat-rolled products" and "cold-rolled carbon steel flat-rolled products."

[C-429-401]

# Potassium Chloride From the German Democratic Republic; Initiation of Countervailing Duty Investigation

**AGENCY:** International Trade Administration/Import Administration, Commerce.

**ACTION:** Notice.

**SUMMARY:** On the basis of a petition filed with the U.S. Department of Commerce, we are initiating a countervailing duty investigation to determine whether manufacturers, producers, or exporters of potassium chloride in the German Democratic Republic (GDR), as described in the "Scope of Investigation" section below, receive benefits which constitute bounties or grants within the meaning of the countervailing duty law. The decision to initiate does not imply any judgment as to whether the practices concerned are in fact bounties or grants.

We will make our preliminary determination on or before June 25, 1984.

**EFFECTIVE DATE:** April 26, 1984.

**FOR FURTHER INFORMATION CONTACT:** Rick Herring, Office of Investigations, Import Administration, International Trade Administration, U.S. Department of Commerce, 14th Street and Constitution Avenue, NW., Washington, D.C. 20230, (202) 377-0187.

**SUPPLEMENTARY INFORMATION:**

## Petition

On March 30, 1984, we received a petition filed by AMAX Chemical, Inc., and Kerr-McGee Chemical Corporation on behalf of the U.S. potassium chloride industry. In compliance with the filing requirements of § 355.26 of the Commerce Regulations (19 CFR 355.26), the petition alleges that manufacturers, producers, or exporters of potassium chloride in the GDR receive benefits which constitute bounties or grants within the meaning of section 303 of the Tariff Act of 1930, as amended (the Act).

Despite the fact that the merchandise under investigation is duty free, the U.S. International Trade Commission is not required to make an injury determination pursuant to section 303(a)(2) of the Act because the United States has no "international obligations" with respect to the GDR within the meaning of that section.

## Initiation of Investigation

Under section 702(c) of the Act, we must determine, within 20 days after a petition is filed, whether the petition sets forth the allegations necessary for the initiation of a countervailing duty

investigation and whether it contains information, reasonably available to the petitioner, supporting the allegations. We have examined the petition on potassium chloride and have found that the petition meets those requirements.

Therefore, we are initiating a countervailing duty investigation to determine whether the manufacturers, producers, or exporters of potassium chloride in the GDR, as described in the "Scope of Investigation" section of this notice, receive benefits which constitute bounties or grants. If our investigation proceeds normally, we will make our preliminary determination by June 25, 1984.

### Scope of Investigation

The product covered by this investigation is potassium chloride, otherwise known as muriate of potash, currently provided for under item number 480.5000 of the *Tariff Schedules of the United States Annotated.*

### Allegations of Bounties or Grants

The petition alleges that the manufacturers, producers, or exporters of potassium chloride in the GDR receive the following benefits which constitute bounties or grants:

- Multiple Exchange Rates
- Price Equalization Bounties or Grants to Producers

This notice of initiation should not be construed to mean that we have resolved the question of whether these practices constitute bounties or grants within the meaning of the countervailing duty law. Similar issues are being investigated in the proceedings on carbon steel wire rod from Czechoslovakia and Poland. Final determinations in those cases will be made by May 1, 1984.

Dated: April 18, 1984.

Alan F. Holmer,

*Deputy Assistant Secretary for Import Administration.*

[FR Doc. 84-11303 Filed 4-25-84; 8:45 am]
BILLING CODE 3510-DS-M

---

[C508-401]

## Potassium Chloride From Israel, Initiation of Countervailing Duty Investigation

**AGENCY:** International Trade Administration, Import Administration, Commerce.

**ACTION:** Notice.

**SUMMARY:** On the basis of a petition filed with the U.S. Department of Commerce, we are initiating a countervailing duty investigation to determine whether manufacturers, producers, or exporters in Israel of potassium chloride, described in the "Scope of Investigation" section below, receive benefits which constitute bounties or grants withing the meaning of the countervailing duty law. We are notifying the U.S. International Trade Commission (ITC) of this action so that it may determine whether imports of the merchandise are materially injuring, or threatening to materially injure, a U.S. industry. If our investigation proceeds normally, the ITC will make its preliminary determination on or before May 14, 1984, and we will make ours on or before June 25, 1984.

**EFFECTIVE DATE:** April 26, 1984.

**FOR FURTHER INFORMATION CONTACT:** John Brinkmann or Richard Rimlinger, Office of Investigations, Import Administration, International Trade Administration, U.S. Department of Commerce, 14th Street and Constitution Avenue, NW., Washington, D.C. 20230, telephone: (202) 377-4929 or 3965.

**SUPPLEMENTARY INFORMATION:**

### Petition

On March 29, 1984, we received a petition filed by Amax Chemicals Inc., Lakeland, Florida, and Kerr-McGee Chemical Corporation, Oklahoma City, Oklahoma, on behalf of the U.S. industry producing potassium chloride. In compliance with the filing requirements of § 355.26 of the Commerce Regulations (19 CFR 355.26), the petition alleges that manufacturers, producers, or exporters in Israel of potassium chloride receive, directly or indirectly, benefits which constitute bounties or grants within the meaning of section 303 of the Tariff Act of 1930, as amended (19 U.S.C. 1671) (the Act), and that these imports are materially injuring, or threatening to materially injure, a U.S. industry.

Israel is not a "country under the Agreement" within the meaning of section 701(b) of the Act; therefore, section 303 of the Act applies to this investigation. Since this merchandise enters the United States duty free and there is an international obligation within the meaning of section 303(a)(2) of the Act, an injury determination is required by the United States International Trade Commission (ITC).

### Initiation of Investigation

Under section 702(c) of the Act, we must determine, within 20 days after a petition is filed, whether a petition sets forth the allegations necessary for the initiation of a countervailing duty investigation and whether it contains information reasonably available to the petitioner supporting the allegations. We have examined the petition on potassium chloride from Israel and have found that the petition meets those requirements. Therefore, we are initiating a countervailing duty investigation to determine whether the manufacturers, producers, or exporters in Israel of potassium chloride, as described in the "Scope of Investigation" section of this notice, receive bounties or grants. If our investigation proceeds normally, we will make our preliminary determination by June 25, 1984.

### Scope of Investigation

The product covered by this investigation is potassium chloride, currently provided for under item 480.5000 of the *Tariff Scheduled of the United States Annotated.*

### Allegations of Subsidies

The petition alleges that manufacturers, producers, or exporters in Israel of potassium chloride receive: capacity expansion grants under the Law for Encouragement of Capital Investments, preferential tax benefits, export credits through programs for export production and export shipments of the Export Fund, preferential insurance rates, preferential loans under the government of Israel Fund for Encouragement of Marketing Abroad, preferential transportation costs and preferential wharfage charges. We are investigating the above programs except for that concerning preferential loans. We are not investigating this program because petitioners' own data indicate that this program is not being used by the sole producer of potash in Israel. In addition, we will include in this investigation Israeli government programs which in prior cases, we have found might confer countervailable benefits.

### Notification to ITC

Section 702(d) of the Act requires us to notify the ITC of these actions and to provide it with the information we use to arrive at these determinations. We will notify the ITC and make available to it all non-privileged and non-confidential information. We will also allow the ITC access to all privileged and confidential information in our files, provided it confirms that it will not disclose such information either publicly or under an administrative protective order without the written consent of the Deputy Assistant Secretary for Import Administration.

### Preliminary Determination by ITC

The ITC will determine by May 14, 1984, whether there is a reasonable indication that imports of potassium chloride from Israel are materially injuring, or threatening to materially injure, a U.S. industry. If that determination is negative, the investigation will terminate; otherwise, the investigation will proceed according to statutory procedures.

Dated: April 18, 1984.

Alan F. Holmer,

*Deputy Assistant Secretary for Import Administration.*

[FR Doc. 84-11304 Filed 4-25-84; 8:45 am]

BILLING CODE 3510-DS-M

---

[C-461-401]

## Potassium Chloride From the Soviet Union, Initiation of Countervailing Duty Investigation

**AGENCY:** International Trade Administration, Import Administration, Commerce.

**ACTION:** Notice.

**SUMMARY:** On the basis of a petition filed with the U.S. Department of Commerce, we are initiating a countervailing duty investigation to determine whether manufacturers, producers, or exporters of potasssium chloride in the Soviet Union, as described in the "Scope of Investigation" section below, receive benefits which constitute bounties or grants within the meaning of the countervailing duty law. The decision to initiate does not imply any judgment as to whether the practices concerned are in fact bounties or grants.

We will make our preliminary determination on or before June 25, 1984.

**EFFECTIVE DATE:** April 26, 1984.

**FOR FURTHER INFORMATION CONTACT:** Rick Herring, Office of Investigations, Import Administration, International Trade Administration, U.S. Department of Commerce, 14th Street and Constitution Avenue, NW., Washington, D.C. 20230 (202) 377-0187.

**SUPPLEMENTARY INFORMATION:**

### Petition

On March 30, 1984, we received a petition filed by AMAX Chemical, Inc., and Kerr-McGee Chemical Corporation on behalf of the U.S. potassium chloride industry. In compliance with the filing requirements of § 355.26 of the Commerce Regulations (19 CFR 355.26), the petition alleges that manufacturers, producers, or exporters of potassium chloride in the Soviet Union receive benefits which constitute bounties or grants within the meaning of section 303 of the Tariff Act of 1930, as ameded (the Act).

Despite the fact that the merchandise under investigation is duty free, the U.S. International Trade Commission is not required to make an injury determination pursuant to section 303(a)(2) of the Act because the United States has no "international obligations" with respect to the Soviet Union within the meaning of that section.

### Initiation of Investigation

Under section 702(c) of the Act, we must determine, within 20 days after a petition is filed, whether the petition sets forth the allegations necessary for the intiation of a countervailing duty investigation and whether it contains information, reasonably available to the petitioner, supporting the allegations. We have examined the petition on potassium chloride and have found that the petition meets those requirements.

Therefore, we are initiating a countervailing duty investigation to determine whether the manufacturers, producers, or exporters of potassium chloride in the GDR, as described in the "Scope of Investigation" section of this notice, receive benefits which constitute bounties or grants. If our investigation proceeds normally, we will make our preliminary determination by June 25, 1984.

### Scope of Investigation

The product covered by this investigation is potassium chloride, otherwise known as muriate of potash, currently provided for under item number 480.5000 of the *Tariff Schedules of the United States Annotated.*

### Allegations of Bounties or Grants

The petition alleges that manufacturers, producers, or exporters of potassium chloride in the GDR receive the following benefits which constitute bounties or grants:

- Multiple Exchange Rates
- Price equalization Bounties or Grants to Producers

This notice of initiation should not be construed to mean that we have resolved the question of whether these practices constitute bounties or grants within the meaning of the countervailing duty law. Similar issues are being investigated in the proceedings on carbon steel wire rod from Czechoslovakia and Poland. Final determination in those cases will be made by May 1, 1984.

Dated: April 18, 1984.

Alan F. Holmer,

*Deputy Assistant Secretary for Import Administration.*

[FR Doc. 84-11305 Filed 4-25-84; 8:45 am]

BILLING CODE 3510-DS-M

---

[A-469-404]

## Potassium Chloride From Spain; Initiation of Antidumping Duty Investigation

**AGENCY:** International Trade Administration, Import Administration, Commerce.

**ACTION:** Notice.

**SUMMARY:** On the basis of a petition filed in proper form with the United States Department of Commerce, we are initiating an antidumping duty investigation to determine whether potassium chloride from Spain is being, or is likely to be, sold in the United States at less than fair value. We are notifying the United States International Trade Commission (ITC) of this action so that it may determine whether imports of this product are materially injuring, or are threatening to materially injure, a United States industry. If this investigation proceeds normally, the ITC will make its preliminary determination on or before May 14, 1984, and we will make ours on or before September 6, 1984.

**EFFECTIVE DATE:** April 26, 1984.

**FOR FURTHER INFORMATION CONTACT:** Terry Link, Office of Investigations, Import Administration, International Trade Administration, United States Department of Commerce, 14th Street and Constitution Avenue, NW., Washington, D.C. 20230; telephone (202) 377-0189.

**SUPPLEMENTARY INFORMATION:**

### The Petition

On March 30, 1984, we received a petition in proper form filed on behalf of AMAX Chemical, Inc. and Kerr-McGee Chemical Corporation.

In compliance with the filing requirements of §353.36 of the Commerce Regulations (19 CFR 353.36), the petition alleges that imports of the subject merchandise from Spain are being, or are likely to be, sold in the United States at less than fair value within the meaning of section 731 of the Tariff Act of 1930, as amended (19 U.S.C. 1673) (the Act), and that these imports are materially injuring, or are threatening to materially injure, a United States industry. Petitioners calculate United States price based on

1982 Bureau of Census statistics. Foreign market value was based on a 1983 ex-mine price converted to U.S. dollars using the fourth quarter 1983 Customs exchange rate. Using this comparison, petitioners show a dumping margin of 30.51 percent for Spain.

### Initiation of Investigation

Under section 732(c) of the Act, we must determine, within 20 days after a petition is filed, whether it sets forth the allegations necessary for the initiation of an antidumping duty investigation and whether it contains information reasonably available to the petitioners supporting the allegations. We have examined the petition on potassium chloride, and we have found that it meets the requirements of section 732(b) of the Act. Therefore, in accordance with section 732 of the Act, we are initiating an antidumping investigation to determine whether potassium chloride from Spain is being, or is likely to be, sold in the United States at less than fair value. If our investigation proceeds normally, we will make our preliminary determination by September 6, 1984.

### Scope of Investigation

The merchandise covered by this investigation is potassium chloride, otherwise known as muriate of potash. Potassium chloride is currently classified under item number 480.50 of the *Tariff Schedules of the United States* (TSUS).

### Notification to ITC

Section 732(d) of the Act requires us to notify the ITC of this action and to provide it with the information we used to arrive at this determination. We will notify the ITC and make available to it all nonprivileged and nonconfidential information. We will also allow the ITC access to all privileged and confidential information in our files, provided it confirms that it will not disclose such information either publicly or under an administrative protective order without the consent of the Deputy Assistant Secretary for Import Administration.

### Preliminary Determination by ITC

The ITC will determine by May 14, 1984, whether there is a reasonable indication that imports of potassium chloride from Spain are materially injuring, or threatening to materially injure, a United States industry. If its determination is negative, the investigation will terminate, otherwise, it will proceed according to the statutory procedures.

Dated: April 18, 1984.

Alan F. Holmer,

*Deputy Assistant Secretary for Import Administration.*

[FR Doc. 84-11302 Filed 4-25-84; 8:45 am]

BILLING CODE 3510-DS-M

---

[C569-403]

## Potassium Chloride From Spain; Initiation of Countervailing Duty Investigation

**AGENCY:** International Trade Administration, Import Administration, Commerce.

**ACTION:** Notice.

**SUMMARY:** On the basis of a petition filed with the U.S. Department of Commerce, we are initiating a countervailing duty investigation to determine whether manufacturers, producers, or exporters in Spain of potassium chloride as described in the "Scope of Investigation" section below, receive benefits which constitute subsidies within the meaning of the countervailing duty law. We are notifying the U.S. International Trade Commission (ITC) of this action so that it may determine whether imports of the merchandise are materially injuring, or threatening to materially injure, a U.S. industry. If our investigation proceeds normally, the ITC will make its preliminary determination on or before May 14, 1984, and we will make ours on or before June 25, 1984..

**EFFECTIVE DATE:** April 26, 1984.

**FOR FURTHER INFORMATION CONTACT:** Richard Rimlinger, Office of Investigations, Import Administration, International Trade Administration, U.S. Department of Commerce, 14th Street and Constitution Avenue, NW., Washington, D.C. 20230, telephone: (202) 377-3962.

**SUPPLEMENTARY INFORMATION:**

### Petition

On March 29, 1984, we received a petition filed by Amax Chemicals Inc., Lakeland, Florida, and Kerr-McGee Chemical Corportion, Oklahoma City, Oklahoma, on behalf of the U.S. industry producing potash. In compliance with the filing requirements of § 355.26 of the Commerce Regulations (19 CFR 355.26), the petition alleges that manufacturers, producers, or exporters in Spain of potassium chloride receive, directly or indirectly, benefits which constitute subsidies within the meaning of section 701 of the Tariff Act of 1930, as amended (19 U.S.C. 1671) (the Act), and that these imports are materially injuring, or threatening to materially injure, a U.S. industry.

Spain is considered a "country under the Agreement" within the meaning of section 701(b) of the Act, therefore, Title VII of the Act applies to this investigation and an injury determination is required.

### Initiation of Investigation

Under section 702(c) of the Act, we must determine, within 20 days after a petition is filed, whether a petition sets forth the allegations necessary for the initiation of a countervailing duty investigation and whether it contains information reasonably available to the petitioner supporting the allegations. We have examined the petition on potassium chloride from Spain and we have found that the petition meets those requirements.

Therefore, we are initiating a countervailing duty investigation to determine whether the manufacturers, producers, or exporters in Spain of potassium chloride described in the "Scope of Investigation" section of this notice, receive subsidies. If our investigation proceeds normally, we will make our preliminary determinations by June 25, 1984.

### Scope of the Investigation

The product covered by this investigation is potassium chloride, currently provided for under item 480.5000 of the *Tariff Schedules of the United States Annotated.*

### Allegation of Subsidies

The petition alleges that the manufacturers, producers, or exporters in Spain of potassium chloride receive preferential short-term export loans, overrebates of indirect taxes under a program known as Desgravacion Fiscal a la Exportacion or DFE, and that the owner of Spain's largest potassium chloride mine, Union Explosivos Rio Tinto, was granted a debt moratorium and other preferential financing terms by the Spanish government. In addition, we will include in this investigation the Spanish government programs which in prior cases, we have found might confer countervailable benefits.

### Notification to ITC

Section 702(d) of the Act requires us to notify the U.S. International Trade Commission of these actions and to provide it with the information we used to arrive at these determinations.

We will notify the ITC and make available to all non-privileged and non-confidential information. We will also allow the ITC access to all privileged

and confidential information in our files, provided it confirms that it will not disclose such information either publicly or under an administrative protective order without the written consent of the Deputy Assistant Secretary for Import Administration.

### Preliminary Determination by ITC

The ITC will determine by May 14, 1984, whether there is a reasonable indication that imports of potassium chloride from Spain are materially injuring, or threatening to materially injure, a U.S. industry. If that determination is negative, the investigation will terminate; otherwise, the investigation will proceed according to statutory procedures.

Dated: April 19, 1984.

Alan F. Holmer,

*Deputy Assistant Secretary for Import Administration.*

[FR Doc. 84-11298 Filed 4-25-84; 8:45 am]

BILLING CODE 3510-DS-M

---

[A-461-402]

## Potassium Chloride From the Union of Soviet Socialist Republics; Initiation of Antidumping Duty Investigation

**AGENCY:** International Trade Administration, Import Administration, Commerce.

**ACTION:** Notice.

**SUMMARY:** On the basis of a petition filed in proper form with the United States Department of Commerce, we are initiating an antidumping investigation to determine whether potassium chloride from the Union of Soviet Socialist Republics (USSR) is being, or is likely to be, sold in the United States at less than fair value. We are notifying the United States International Trade Commission (ITC) of this action so that it may determine whether imports of this product are injuring materially, or are threatening to injure materially, a United States industry. If the investigation proceeds normally, the ITC will make its preliminary determination on or before May 14, 1984, and we will make ours on or before September 6, 1984.

**EFFECTIVE DATE:** April 26, 1984.

**FOR FURTHER INFORMATION CONTACT:** Michael Ready, Office of Investigations, Import Administration, International Trade Administration, United States Department of Commerce, 14th Street and Constitution Avenue, NW., Washington, D.C. 20230; telephone (202) 377-2613.

**SUPPLEMENTARY INFORMATION:**

### The Petition

On March 30, 1984, we received a petition from AMAX Chemical, Incorporated and Kerr-McGee Chemical Corporation, filed on behalf of the United States potassium chloride industry. In compliance with the filing requirements of § 353.36, of the Commerce Regulations (19 CFR 353.36), the petition alleges that imports of the subject merchandise from the USSR are being, or are likely to be, sold in the United States at less than fair value within the meaning of section 731 of the Tariff Act of 1930, as amended (19 U.S.C. 1673) (the Act), and that these imports are injuring materially, or are threatening to materially injure, a United States industry. The petition further alleges that the USSR is a state-controlled economy country within the meaning of the Act. It alleges that sales of potassium chloride in the USSR do not permit a determination of foreign market value and that the Department of Commerce must choose a surrogate country for the purposes of determining the foreign market value of this product.

The petitioners suggest the Federal Republic of Germany (FRG) as a surrogate country and support their allegation of sales at less than fair value by comparing the list price of potassium chloride in the FRG, netted back to an ex-minehead price, to the average ex-minehead price of potassium chloride imported into the United States from the USSR. The ex-minehead price for sales in the U.S. was developed by the petitioners from the average free along side (FAS) price of potassium chloride imported into the United States from the USSR, calculated from import statistics published by the U.S. Department of Commerce. The petitioners deducted an amount for inland freight based on freight charges in the FRG from the FAS price to arrive at an ex-minehead price.

### Initiation of Investigation

Under section 732(c) of the Act, we must determine, within 20 days after a petition is filed, whether it sets forth the allegations necessary for the initiation of an antidumping investigation and whether it contains information, reasonably available to the petitioner, supporting the allegations. We have examined the petition on potassium chloride and we have found that it meets the requirements of section 732(b) of the Act. Therefore, in accordance with section 732 of the Act, we are initiating an antidumping investigation to determine whether potassium chloride from the USSR is being, or is likely to be, sold in the United States at less than fair value. If our investigation proceeds normally, we will make our preliminary determination by September 6, 1984.

### Scope of Investigation

The merchandise covered by this investigation is potassium chloride, otherwise known as muriate of potash. The product is classified under Item number 480.50 of the Tariff Schedules of the United States.

### Notification to ITC

Section 732(d) of the Act requires us to notify the ITC of this action and to provide it with the information we used to arrive at this determination. We will notify the ITC and make available to it all nonprivileged and nonconfidential information. We will also allow the ITC access to all privileged and confidential information in our files, provided it confirms that it will not disclose such information either publicly or under an administrative protective order without the consent of the Deputy Assistant Secretary for Import Administration.

### Preliminary Determination by ITC

The ITC will determine by May 14, 1984, whether there is a reasonable indication that imports of potassium chloride from the USSR are materially injuring, or threatening to materially injure, a United States industry. If its determination is negative, the investigation will terminate, otherwise, it will proceed according to the statutory procedures.

Dated: April 18, 1984.

Alan F. Holmer,

*Deputy Assistant Secretary for Import Administration.*

[FR Doc. 84-11300 Filed 4-25-84; 8:45 am]

BILLING CODE 3510-DS-M

---

[A-429-402]

## Potassium Chloride From the German Democratic Republic; Initiation of Antidumping Investigation

**AGENCY:** International Trade Administration, Import Administration, Commerce.

**ACTION:** Notice.

**SUMMARY:** On the basis of a petition filed in proper form with the United States Department of Commerce, we are initiating an antidumping investigation to determine whether potassium chloride from the German Democratic Republic (GDR) is being, or is likely to be, sold in the United States at less than fair value. We are notifying the United States International Trade Commission (ITC) of this action so that it may

determine whether imports of this product are materially injuring, or are threatening to materially injure, a United States industry. If the investigation proceeds normally, the ITC will make its preliminary determination on or before May 14, 1984, and we will make ours on or before September 6, 1984.

**EFFECTIVE DATE:** April 26, 1984.

**FOR FURTHER INFORMATION CONTACT:** Michael Ready, Office of Investigations, Import Administration, International Trade Administration, United States Department of Commerce, 14th Street and Constitution Avenue, NW., Washington, D.C. 20230; telephone (202) 377-2613.

**SUPPLEMENTARY INFORMATION:**

## The Petition

On March 30, 1984, we received a petition from AMAX Chemical, Incorporated and Kerr-McGee Chemical Corporation, filed on behalf of the United States potassium chloride industry. In compliance with the filing requirements of § 353.36, of the Commerce Regulations (19 CFR 353.36), the petition alleges that imports of the subject merchandise from the GDR are being, or are likely to be, sold in the United States at less than fair value within the meaning of section 731 of the Tariff Act of 1930, as amended (19 U.S.C. 1673) ("the Act"), and that these imports are injuring materially, or are threatening to injure materially, a United States industry.

The petition further alleges that the GDR is a state-controlled economy country within the meaning of the Act. It alleges that sales of potassium chloride in the GDR do not permit a determination of foreign market value and that the Department of Commerce must choose a surrogate for the purposes of determining the foreign market value of this product.

The petitioners suggest the Federal Republic of Germany (FRG) as a surrogate country and support their allegation of sales at less than fair value by comparing the list price of potassium chloride in the FRG, netted back to an ex-minehead price, to the average ex-minehead price of potassium chloride imported into the United States from the GDR. The ex-minehead price for sales in the U.S. was developed by the petitioners from the average free along side (FAS) price of potassium chloride imported into the United States from the GDR, calculated from import statistics published by the U.S. Department of Commerce. The petitioners deducted therefrom an amount for inland freight based on freight charges in the FRG for the mine to port distance in the GDR to arrive at an ex-minehead price.

## Initiation of Investigation

Under section 732(c) of the Act, we must determine, within 20 days after a petition is filed, whether it sets forth the allegations necessary for the initiation of an antidumping investigation and whether it contains information, reasonably available to the petitioner, supporting the allegations. We have examined the petition on potassium chloride and we have found that it meets the requirements of section 732(b) of the Act. Therefore, in accordance with section 732 of the Act, we are initiating an antidumping investigation to determine whether potassium chloride from the GDR is being, or is likely to be, sold in the United States at less than fair value. If our investigation proceeds normally, we will make our preliminary determination by September 6, 1984.

## Scope of Investigation

The merchandise covered by this investigation is potassium chloride, otherwise known as muriate of potash. The product is classified under Item number 480.50 of the Tariff Schedules of the United States.

## Notification to ITC

Section 732(d) of the Act requires us to notify the ITC of this action and to provide it with the information we used to arrive at this determination. We will notify the ITC and make available to it all nonprivileged and nonconfidential information. We will also allow the ITC access to all privileged and confidential information in our files, provided it confirms that it will not disclose such information either publicly or under an administrative protective order without the consent of the Deputy Assistant Secretary for Import Administration.

## Preliminary Determination by ITC

The ITC will determine by May 14, 1984, whether there is a reasonable indication that imports of potassium chloride from the GDR are materially injuring, or threatening to materially injure, a United States industry. If its determination is negative, the investigation will terminate, otherwise, it will proceed according to the statutory procedures.

Dated: April 18, 1984.

Alan F. Holmer,

*Deputy Assistant Secretary for Import Administration.*

[FR Doc. 84-11299 Filed 4-25-84; 8:45 am]

BILLING CODE 3510-DS-M

[A-508-402]

# Potassium Chloride From Israel; Initiation of Antidumping Duty Investigation

**AGENCY:** International Trade Administration, Import Administration, Commerce.

**ACTION:** Notice.

**SUMMARY:** On the basis of a petition filed in proper form with the United States Department of Commerce, we are initiating an antidumping duty investigation to determine whether potassium chloride from Israel is being, or is likely to be, sold in the United States at less than fair value. We are notifying the United States International Trade Commission (ITC) of this action so that it may determine whether imports of this product are materially injuring, or are threatening to materially injure, a United States industry. If this investigation proceeds normally, the ITC will make its preliminary determination on or before May 14, 1984, and we will make ours on or before September 6, 1984.

**EFFECTIVE DATE:** April 26, 1984.

**FOR FURTHER INFORMATION CONTACT:** John Brinkmann, Office of Investigations, Import Administration, International Trade Administration, United States Department of Commerce, 14th Street and Constitution Avenue, NW., Washington, D.C. 20230; telephone (202) 377-4929.

**SUPPLEMENTARY INFORMATION:**

## The Petition

On March 30, 1984, we received a petition in proper form filed on behalf of AMAX Chemical, Inc. and Kerr-McGee Chemical Corporation.

In compliance with the filing requirements of § 353.36 of the Commerce Regulations (19 CFR 353.36), the petition alleges that imports of the subject merchandise from Israel are being, or are likely to be, sold in the United States at less than fair value within the meaning of section 731 of the Tariff Act of 1930, as amended (19 U.S.C. 1673) (the Act), and that these imports are materially injuring, or are threatening to materially injure, a United States industry. Petitioners calculate United States price based on an f.o.b. price with deductions for ocean freight and estimated handling costs in Israel. Since petitioners were unable to secure home market or third country prices for the merchandise subject to this investigation, foreign market value

was based on United States producers' costs for the merchandise adjusted for labor cost differences in Israel. Using this comparison, there is an apparent dumping margin of 3.3 percent.

### Initiation of Investigation

Under section 732(c) of the Act, we must determine, within 20 days after a petition is filed, whether it sets forth the allegations necessary for the initiation of an antidumping duty investigation and whether it contains information reasonably available to the petitioners supporting the allegations. We have examained the petition on potassium chloride, and we have found that it meets the requirements of section 732(b) of the Act. Therefore, in accordance with section 732 of the Act, we are initiating an antidumping investigation to determine whether postassium chloride from Israel is being, or is likely to be, sold in the United States at less than fair value. If our investigation proceeds normally, we will make our preliminary determination by September 6, 1984.

### Scope of Investigation

The merchandise covered by this investigation is potassium chloride, otherwise known as muriate of potash. Potassium chloride is currently classified under item number 480.50 of the *Tariff Schedules of the United States* (TSUS).

### Notification to ITC

Section 732(d) of the Act requires us to notify the ITC of this action and to provide it with the information we used to arrive at this determination. We will notify the ITC and make available to it all nonprivileged and nonconfidential information. We will also allow the ITC access to all privileged and confidential information in our files, provided it confirms that it will not disclose such information either publicly or under an administrative protective order without the consent of the Deputy Assistant Secretary for Import Administration.

### Preliminary Determination by ITC

The ITC will determine by May 14, 1984, whether there is a reasonable indication that imports of potassium chloride from Israel are materially injuring, or threatening to materially injure, a United States industry. If its determination is negative, the investigation will terminate; otherwise, it will proceed according to the statutory procedures.

Dated: April 18, 1984.

Alan F. Holmer,

*Deputy Assistant Secretary for Import Administration.*

[FR Doc. 84-11301 Filed 4-25-84; 8:45 am]

BILLING CODE 3510-DS-M

---

[C-357-005]

## Cold-Rolled Carbon Steel Flat-Rolled Products From Argentina: Final Affirmative Countervailing Duty Determination and Countervailing Duty Order

**AGENCY:** International Trade Administration, Commerce.

**ACTION:** Notice.

**SUMMARY:** We determine that certain benefits that constitute bounties or grants within the meaning of the countervailing duty law are being provided to manufacturers, producers, or exporters in Argentina of cold-rolled carbon steel flat-rolled products. The net bounty or grant for each company is identified in the "Suspension of Liquidation" section of this notice. We are directing the U.S. Customs Service to continue to suspend liquidation of all entries of cold-rolled carbon steel flat-rolled products from Argentina that are entered, or withdrawn from warehouse, for consumption, on or after the date of publication of this notice and to require a cash deposit on this product in the amount equal to the net bounty or grant.

**EFFECTIVE DATE:** April 26, 1984.

**FOR FURTHER INFORMATION CONTACT:** Barbara Tillman or Kenneth Haldenstein; Office of Investigations, Import Administration, International Trade Administration, U.S. Department of Commerce, 14th Street and Constitution Avenue, NW., Washington, D.C. 20230; telephone: (202) 377-0192 or 377-4136.

**SUPPLEMENTARY INFORMATION:**

### Final Determination and Order

Based upon our investigation, we determine that certain benefits constituting bounties or grants within the meaning of section 303 of the Tariff Act of 1930, as amended (the Act), are being provided to manufacturers, producers, or exporters in Argentina of cold-rolled carbon steel flat-rolled products. For purposes of this investigation, the following programs are found to confer bounties or grants:

- Post-financing of exports under Circular OPRAC 1-9
- Government equity infusions
- Loans and loan guarantees during the period we consider Somisa uncreditworthy
- Somisa's purchases of "oil residue coal"
- Capital tax exemption for Somisa
- Import duty exemptions.

We determine the net bounty or grant to be the rate specified for each company in the "Suspension of Liquidation" section of this notice.

### *Case History*

On November 10, 1983, we received petitions from the United States Steel Corporation (U.S. Steel), Pittsburgh, Pennsylvania, filed on behalf of the hot-rolled and cold-rolled carbon steel sheet industries. The petition relating specifically to hot-rolled carbon steel sheet was subsequently withdrawn. In compliance with the filing requirements of § 355.26 of our regulations (19 CFR 355.26), the remaining petition alleges that manufacturers, producers or exporters in Argentina of cold-rolled carbon steel sheet receive, directly or indirectly, benefits constituting bounties or grants within the meaning of section 303 of the Act.

We found the petition to contain sufficient grounds upon which to initiate a countervailing duty investigation, and on November 22, 1983, we initiated such an investigation (48 FR 55012). We stated that we expected to issue a preliminary determination by February 3, 1984.

Because Argentina is not a "country under the Agreement" within the meaning of section 701(b) of the Act, section 303 of the Act applies to this investigation. Because the merchandise being investigated is dutiable, the domestic industry is not required to allege that, and the U.S. International Trade Commission is not required to determine whether, imports of this product cause or threaten material injury to a U.S. industry.

We presented a questionnaire concerning the allegations to the government of Argentina in Washington, D.C., on December 16, 1983. On January 16, 1984, we received responses to the questionnaire.

On February 3, 1984, we preliminarily determined that benefits constituting bounties or grants within the meaning of the countervailing duty law are being provided to manufacturers, producers, or exporters in Argentina of cold-rolled carbon steel flat-rolled products (49 FR 5151). Although a hearing had been requested, the request was subsequently withdrawn. We received briefs from the parties to the proceeding on February 12 and 21, March 4, 9, 15, and 20, and April 2 and 9.

*Scope of Investigation*

The products covered by this investigation are cold-rolled carbon steel flat-rolled products. In the preliminary determination, we used the term cold-rolled carbon steel sheet in describing the products included in this investigation. This is the generic term used by the U.S. industry to describe the products under investigation. The more correct term is cold-rolled carbon steel flat-rolled products. The complete technical description of these products, which has not changed from the preliminary determination, is contained in the Product Description Appendix attached to this notice.

There are two known producers and exporters in Argentina of cold-rolled carbon steel flat-rolled products to the United States. We received information from the government of Argentina regarding Somisa-Sociedad Mixta Siderurgica Argentina (Somisa) and Propulsora Siderurgica Saic (Propulsora), which represented over 85 percent of exports of this product to the United States during the period for which we are measuring bounties or grants, July 1982 through June 1983.

*Analysis of Programs*

Throughout this notice, we refer to general principles applied to the facts of the current investigation. These general principles are described in detail in the Subsidies Appendix attached to this notice. For purposes of this final determination, we are calculating company-specific *ad valorem* rates for the bounties or grants received by each company. We are calculating company-specific rates because the two respondents have received materially different benefits and there are significant differences in the number and type of programs used by each respondent. The period for which we are measuring bounties or grants is July 1982 through June 1983, which corresponds to Somisa's and Propulsora's most recently completed fiscal year. To calculate *ad valorem* rates we used inflation-adjusted sales figures as of June 30, 1983; therefore, we adjusted the benefits for inflation as of the same date.

As described in the Subsidies Appendix, several programs alleged by the petitioner—government provision of equity capital, long-term loans and loan guarantees—require an assessment of the producer's "equityworthiness" and "creditworthiness" before we can determine if, and in what magnitude, a countervailable benefit has been conferred.

We have consistently held that government provision of, or assistance in obtaining, capital or debt does not *per se* confer a subsidy. Government equity purchases or financial backing bestow a countervailable benefit only when they occur on terms inconsistent with commercial considerations. To determine if such action is commercially unsound, we review and assess financial data for the company in question. For this final determination we conducted a comprehensive review, and considered fully the factors relevant to a determination of inconsistency with commercial considerations. For loans and loan guarantees, we determine whether the company was "creditworthy" in the years in which the loans were provided. In making this determination we focus on cash flow and other measures of the ability of each company to meet its long-term debt obligations.

With regard to whether a company is a reasonable equity investment (a condition we have termed "equityworthiness"), we examined the financial ratios, operating profits or losses and other relevant data (*e.g.* effects of inflation and current market demand) to evaluate the company's current and future ability to earn a reasonable rate of return on equity investments.

For purposes of this final determination, we assessed the creditworthiness only of Somisa. We did not assess Propulsora's creditworthiness because uncreditworthiness was not alleged by petitioners, and because at the time of the government's equity infusion into Propulsora, there were also purchases of stock by private subscribers. In assessing Somisa's creditworthiness and equityworthiness, we reviewed financial ratios and other measurements derived from Somisa's financial statements and accounting records for the fiscal years 1968/1969 through 1982/1983. We found the company to be uncreditworthy from fiscal year 1978/79 through 1981/82 and to be unequityworthy from 1977/78 through 1982/83.

In its response, the government of Argentina provided data for the applicable period including financial statements and debt information for both Somisa and Propulsora. In addition, Propulsora submitted a supplemental response containing information on Propulsora's use of the alleged subsidy programs. After the verification, the government provided amended responses on March 20 and 26 and April 3. Based upon our analysis of the petition, the responses to our questionnaire and our verification, we determine the following:

I. Programs Determined To Confer Bounties or Grants

We determine that bounties or grants are being provided to manufacturers, producers, or exporters in Argentina of cold-rolled carbon steel flat-rolled products under the following programs.

A. *Post-Financing of Exports Under Circular OPRAC 1-9.* On September 24, 1982, the Central Bank of Argentina established a post-financing program for exports under Circular OPRAC 1-9. OPRAC 1-9 loans are granted for up to 30 percent of the peso equivalent of the foreign currency in which the export transaction was paid. The term of the loan is 180 days. The interest rate charged on OPRAC 1-9 loans is the regulated rate used by commercial banks, as required under Central Bank Regulations. Both Somisa and Propulsora received OPRAC 1-9 loans.

The Subsidies Appendix states that the benchmark for short-term loans is the national average commercial rate. In the preliminary determination, we used as the benchmark the unregulated interest rates for short-term commercial bank loans published in the "Indicadores de Coyuntura" (Current Economic Indicators) by the Fundacion de Investigaciones Economicas Latino Americanos (FIEL). We used the unregulated rates because at that time, based on best information available, we considered them a better reflection of average commercial rates than the regulated commercial bank rates. However, during verification, we found that from June 1982 through September 1983, the interest rates on all loans were, in effect, regulated. Either the interest rate itself was regulated or the amount of credit available at "unregulated" rates was controlled. Therefore, for purposes of this final determination, we consider that a weighted average of the regulated and "unregulated" interest rates in effect during that period best represents the national average commercial rate.

Using this weighted-average rate as the benchmark, we calculate a bounty or grant on exports of 0.49 percent *ad valorem* for Propulsora and 0.01 percent *ad valorem* for Somisa.

B. *Government Equity Infusions.* Petitioner alleged that equity infusions into Somisa by the government of Argentina (GOA) were on terms inconsistent with commercial considerations. Somisa received capital contributions from the GOA between 1979 and 1983 to support its planned expansion from 2.5 to 4.5 million tons of annual production capacity. In the preliminary determination, we stated

that the agreement on these equity infusions was reached in 1976; we found at verification that the agreement was implemented by Decrees 2.887/78 of 1978 and 1.832/81 of 1981. The agreement provided, in effect, a capital infusion of U.S. $80 million. The terms of the agreement specified that Somisa would obtain long-term loans totalling U.S. $80 million, and the GOA would pay the debt in exchange for stock issued at par value.

The GOA also provided equity infusions into Somisa from 1971 through 1976 under Decree 2.664/70 of 1970, which authorized the GOA to provide infusions for Somisa's expansion to 2.5 million tons of annual production capacity. Cash was provided directly for shares at par value.

In determining whether the government's equity participation in Somisa was on terms inconsistent with commercial considerations, we followed the guidelines outlined in the "Analysis of Programs" section of this notice. We determine that Somisa was not a reasonable commercial investment (was unequityworthy) as of fiscal year 1977/1978. Therefore, we find the infusions under the 1978 agreement to confer countervailable benefits. Following the methodology outlined in the Subsidies Appendix for calculating the countervailable benefit from equity infusions made on terms inconsistent with commercial considerations when a firm's shares are not publicly traded, we calculated a net bounty or grant of 0.41 percent *ad valorem*.

The GOA also participated in the equity of Propulsora. The Banco National de Desarrollo (Banade) an entity controlled by the GOA, participated in the original issuance of Propulsora's share capital in 1969. Propulsora bought out the bank's shares in 1980. We verified that private purchases of Propulsora' stock made at the same time as Banade's purchase were at the same price and terms. Therefore, we determine that the government of Argentina's equity participation in Propulsora did not confer a countervailable benefit.

C. *Loans and Loan Guarantees During the Period We Consider Somisa Uncreditworthy.* Petitioner alleged that Somisa was uncreditworthy during the period when it received loans and loan guarantees from government institutions. As described in the "Analysis of Programs" section, *supra*, we find Somisa to have been uncreditworthy between fiscal years 1978/1979 and 1981/1982. Somisa recived some loans from government-controlled banks during those years and many private foreign currency loans that were quaranteed by government institutions. Government guarantees are not countervailable, even in an uncreditworthy period, if they are provided on equal terms to a wide variety of industries. There is no evidence on the record, however, that government guarantees of foreign currency loans during the period when the loan recipient can be considered uncreditworthy were available to a wide range of industries. Therefore, we determine that the government loan guarantees provided to Somisa during the period we consider it to be uncreditworthy confer a bounty or grant.

We treated both the loans and the guaranteed loans under the methodology outlined in the Subsidies Appendix for loans to uncreditworthy companies. For those loans with variable interest rates, however, we could not perform present value calculations. Instead, we compared the interest rate paid by the company to the sum of the highest interest rate commonly available in Argentina and the risk premium during the period for which we are measuring bounties or grants. Some of these variable rate loans were denominated in U.S. dollars, and the interest rates are quoted as a percentage above the London Interbank Offer Rate (Libor). Because these were non-peso loans with non-Argentine interest rates, it would have been inappropriate to apply Argentine interest rates in calculating the benefits. Therefore, we used as the benchmark the Libor rate in effect during the period for which we are measuring bounties or grants, plus the spread that prevailed in Argentina for medium-term loans denominated in U.S. dollars during that time, plus the risk premium. Finally, one of these guaranteed loans was denominated in Swiss francs at a fixed rate of interest. For this loan we followed the standard methodology outlined in the Subsidies Appendix for loans to uncreditworthly companies. We used a Swiss franc rate, published in Morgan Guaranty's *World Financial Markets* to calculate both the benchmark and discount rate. We calculated a net bounty or grant of 0.63 percent *ad valorem*.

D. *Somisa's Purchases of "Oil Residue Coal".* During the verification at Somisa of alleged benefits under Decree 619, we examined the purchasing process and prices paid for for several inputs. One of these inputs was "oil residue coal." The prices of all oil products, including oil residue coal, are set by the GOA. Somisa provided us with the government's official price list for oil products. On the list, a price is quoted for oil residue coal used as a fuel, and a separate, lower price is quoted for oil residue coal used in the steel industry. Neither Somisa not the government has been able to explain or document the basis for the price differential. Therefore, we determine that the lower preferential price for oil residue coal used by the steel industry provides a benefit to a specific industry or group of industries. To calculate the benefit, we estimated the quantity of oil residue coal purchased by Somisa from July 1982 through June 1983 and multiplied it by the difference between the two prices for oil residue coal. We divided the result by Somisa's total sales to calculate a net bounty or grant of 0.09 percent *ad valorem*.

E. *Capital Tax Exemption for Somisa.* During the verification at Somisa of alleged tax incentives provided under the Industrial Promotion Law, Decree 619, and other laws and decrees, we found that Somisa receives a 100 percent exemption of its capital tax liability.

This exemption was originally authorized by Decree 5038/61, and is currently authorized by Decree 548/81. Decree 548/81, which applies specifically to Somisa, provides a 100 percent capital tax exemption and a 33 percent income tax exemption on fixed assets and real estate. These exemptions are countervailable because they are limited to a specific enterprise. Because Somisa had no taxable income in fiscal year 1981/82 even without the 33 percent exemption, we find that the 33 percent income tax exemption does not provide a countervailable benefit to Somisa. We treated the capital tax exemption as a grant expensed in the year of receipt. Since the value of a tax benefit is not known until after the tax returns have been filed, we used the tax return prepared for fiscal year 1981/82 (July 1981 through June 1982) to estimate the benefit received in fiscal year 1982/83, the year for which we are measuring bounties or grants. The benefit was calculated by multiplying Somisa's taxable capital in fiscal year 1981/82 by the tax rate of 1.5 percent. This benefit was divided by the value of Somisa's total sales to calculate a net bounty or grant of 2.66 percent *ad valorem*.

F. *Import Duty Exemptions.* Argentine tariff law authorizes import duty exemptions on raw materials and capital goods when there is no domestic production or insufficient domestic production to meet domestic demand, and when importation will not interfere with the market for domestic production. Because nominal general availability is not necessarily sufficient to prevent a program from being considered a domestic subsidy, we requested

documentation during verification to determine whether the exemptions are limited to a specific industry or group of industries. Regarding import duty exemptions for capital goods, we verified that a number of firms in a wide variety of industries were exempted from import duties. The evidence shows that those who apply for the import duty exemption on capital goods receive it. Therefore, we determine that import duty exemptions on capital goods are not limited to a specific industry or group of industries.

Although we requested similar information concerning the duty exemptions on raw materials, the government did not provide sufficient documentation to demonstrate that import duty exemptions on raw materials are not limited to a specific industry or group of industries. In the absence of such evidence, we determine that the import duty exemption for raw materials confers a bounty or grant on the product under investigation.

To calculate the benefit of the exemption to both Somisa and Propulsora, we used, as best information available, the verified information on f.o.b. prices paid by Propulsora to foreign suppliers for hot-rolled coil during fiscal year 1982/1983. These prices were multiplied by the import duty rate of 19 percent listed in the Argentine tariff schedules for most of the different types of "chapas laminadas en caliente," or hot-rolled sheet and coil.

To find the total amount of import duties exempted, we multiplied the amount of the exemption by the total tonnage imported. Because we are using data verified at Propulsora as best information available, and because Somisa produces significantly more steel than Propulsora, we multiplied our calculation of the total amount of import duties exempted by the ratio of Somisa's production to Propulsora's production in order to derive a better estimate of import duties from which Somisa may have been exempted. Because any import duties that would have been paid would be eligible for a rebate upon exportation under the reembolso program, we had to factor out the import duties exempted on each firm's export sales from our calculation of the total amount of import duties exempted. The remainder constitutes the benefit received by each company. We divided the remainder by the total value of each company's sales to calculate a net bounty or grant of 1.85 percent *ad valorem* for Propulsora and 2.62 percent *ad valorem* for Somisa.

## II. Programs Determined Not To Confer Bounties or Grants

We determine bounties or grants are not being provided to manufacturers, producers, or exporters in Argentina of cold-rolled carbon steel flat-rolled products under the following programs.

A. *Reembolso—Tax Rebate on Exports.* The reembolso program was established in 1971. It authorized a refund by cash payment on export of taxes "that bear directly or indirectly" on exported products and/or their component raw materials for the purpose of promoting exports. The amount of the reimbursement is equal to a fixed percentage of the f.o.b. value of the exported merchandise. This percentage varies by product. Both Propulsora and Somisa participate in the reembolso program.

Under the Act, the non-excessive rebate of indirect taxes levied at the final stage, and of prior stage cumulative indirect taxes borne by inputs that are physically incorporated into the fianl product, is not considered a subsidy. With respect to such non-VAT rebates, in order to determine whether a cash payment on export is a *bona fide* rebate of indirect taxes, we examine whether: (1) The program involved operates for the purpose of rebating indirect taxes; (2) there is a clear link between eligibility for payments on exports and indirect taxes paid; and (3) the government has reasonably calculated and documented the actual tax incidence borne by the product concerned and has demonstrated a clear link between such tax incidence and the rebate amount paid on export.

The reembolso program is designed to refund taxes that "bear directly or indirectly on export products." We view taxes borne by a product as indirect, and taxes on, for example, income and labor as direct.

Based on our review of the total tax incidence that the reembolso is designed to rebate, we are satisfied that the reembolso operates "for the purpose of rebating indirect taxes," and that it meets our first test.

Following a general reorganization of the reembolso program in 1976, the rate of reembolso on cold-rolled carbon steel sheet was set at five percent. At the time, the GOA analyzed the steps of production and value-added at each stage for each major sector of Argentine industry. The reembolso rate for each sector was then based on the estimated tax incidence derived from the analysis. This procedure provided the GOA only a general model upon which the tax incidence for specific sectors could be estimated. Without more precise evidence of the indirect taxes levied on cold-rolled carbon steel sheet, we would not find the requisite link between indirect taxes actually paid and the reembolso payments (the second prerequisite for considering the reembolso not to be a bounty or grant).

In 1980, the Value Added Tax was established (Law 22.294/80) and in 1981, certain minor taxes were suspended (Law 22.374/81). As a result of these modifications to the Argentine tax system, the government reviewed the studies on the fiscal incidence of taxes in order to reevaluate the levels of the reembolso. This detailed review of specific taxes levied on cold-rolled carbon steel sheet, when considered in conjunction with the more general 1976 study, provides a sufficient basis for our determining that the reembolso program meets the second test of a clear link between eligibility for the reembolso and indirect taxes paid.

In reviewing the studies on the fiscal incidence of taxes, the government selected certain firms as representative of their industries. Propulsora was selected as representative of the cold-rolled carbon steel sheet industry.

In both 1976 and 1981, Propulsora, using the guidelines and methodology provided by the government, conducted the review of the studies on the fiscal incidence of taxes on the cold-rolled carbon steel sheet industry. In addition, Propulsora conducted the studies of the fiscal incidence of taxes at the prior stages of production.

In the questionnaire response, the GOA provided us with the most recent analysis of the tax incidence on cold-rolled carbon steel sheet. This analysis shows that the taxes levied on cold-rolled carbon steel sheet, which the reembolso is designed to rebate, total 16.14 percent of the f.o.b. value of the exports. Seven categories are included in the analysis: domestic raw material inputs, imported raw material inputs, variable costs, labor, indirect expenses, taxes paid directly, and export taxes.

Of the 16.14 percent, the taxes on labor and indirect expenses, which total 0.78 perent, either are direct taxes or do not meet our standard for physical incorporation into the final product. In the preliminary determination, we also found that the taxes on variable costs totaling 1.01 percent did not meet our physical incorporation standard. During verification, we received and itemization of the variable costs included in the category and the taxes incident to each of these costs. We established that a number of these cost items, such as packing materials, are physically incorporated into the final

product, while a number of others, such as electricity and fuel, are not. The physically incorporated variable cost items account for 0.21 percent of the fiscal incidence of taxes on cold-rolled carbon steel sheet. The items that do not meet our standard for physical incorporation account for 0.80 percent.

In its questionnaire responses, the GOA itemized only some of the taxes on domestically produced inputs. The remainder, which accounted for the majority of the tax incidence claimed, was not itemized. In the preliminary determination, we determined that because these taxes and their fiscal incidence on inputs were not itemized, our third test was not met; that is, the government had not reasonably calculated and documented the actual tax incidence borne by the product concerned. During verification, we found that the non-itemized taxes represented the total tax incidence at the prior stages of production. We reviewed the studies prepared by Propulsora on the total tax incidence at the hot-rolled coil stage of production and for production of primary raw materials, such as pellets and limestone. These studies are organized in the same way as the cold-rolled sheet study and include taxes on labor and indirect expenses, which either are direct taxes or do not meet our standard for physical incorporation into the final product.

In calculating the allowable tax incidence in the domestic raw material category, we only included those indirect taxes at prior stages of production that meet our standard for physical incorporation. Applying this standard, we found that 6.12 percent of the tax incidence claimed is allowable and 2.84 percent is not.

The taxes in each of the three remaining categories—imported raw material inputs, taxes paid directly, such as municipal taxes, and export taxes—meet our third test because they are itemized, and the rate of each tax and its incidence are calculated. These taxes—which include the stamp tax, the tax on transfer of foreign currency, insurance taxes, municipal taxes and the export contract stamp tax—are all indirect taxes. The total incidence of the taxes in these three categories is 5.39 percent.

Therefore, of the total 16.14 percent tax incidence claimed by the government of Argentina for cold-rolled carbon steel sheet, we have allowed 11.72 percent and disallowed 4.42 percent.

In order to determine whether the reembolso confers a bounty or grant on cold-rolled carbon steel sheet, we must compare what we have determined as allowable to the reembolso rate currently in effect for cold-rolled carbon steel sheet. Since July 5, 1982, the reembolso for cold-rolled carbon steel sheet has been 10 percent (Resolution M.E. 8/82). In addition to the normal reembolso, petitioner alleged the existence of bounties or grants through two additional reembolsos. Decree No. 1691 temporarily established an additional reembolso of 15 percent. This reembolso was abolished in April 1982 and, thus, was not in effect during the period for which we are measuring bounties or grants, July 1982 through June 1983. Decree No. 2863/72 granted an additional reembolso of five percent for exports to new markets. This reembolso, which was abolisehd in April 1983, was not received by the respondent companies on exports of cold-rolled carbon steel sheet to the United States.

We verified that only the 10 percent reembolso is currently received by Somisa and Propulsora. To determine if the reembolso confers a bounty or grant, we compared the 10 percent reembolso received to the total allowable indirect taxes of 11.72 percent. Because the reembolso does not exceed the total allowable indirect taxes of 11.72 percent, we determine that the reembolso does not confer a bounty or grant on cold-rolled carbon steel flat-rolled products.

B. *Propulsora's Purchases of Inputs from Somisa.* Petitioner alleged that Somisa, a state-owned company, offers semi-finished products at special discounts to other Argentine steel producers, particularly Propulsora, who use them to manufacture finished steel products for export.

Our information indicates that Propulsora purchases approximately 50 percent of its hot-rolled coil requirements from Somisa. We verified that these purchases were at prices comparable to those paid by Propulsora to its foreign suppliers. Furthermore, we found no indication that Propulsora receives special discounts on purchases of inputs intended for export from Somisa. Consequently, we determine that Propulsora receives no countervailable benefits through its purchases of inputs from Somisa.

C. *Pre-Financing of Exports through Dollar-Indexed Peso Loans.* Under this program, which was authorized under Central Bank Circular RF-153, exporters receive pre-export financing through peso loans equal to 60 percent of the export sale's f.o.b. value. The loans are given in pesos but denominated in U.S. dollars at the exchange rate prevailing at the time of the loan. Repayment must also be in pesos, but the peso amount is established by the exchange rate prevailing at the time of repayment. In addition to repaying the peso amount of the loan at the exchange rate prevailing at the time of repayment, the borrower also must pay a one percent interest rate. The funds are drawn from the Central Bank of Argentina and then loaned through private commercial banks to individual corporate borrowers. The maximum length of the loan is 120 days, but repayment must take place no later than 60 days from the effective export date.

We verified that Somisa had one loan outstanding under this program during the period of review, while Propulsora had none. When compared the cost to Somisa for this loan with what Somisa would have paid commercially for the same loan, using as the benchmark the weighted average of the regulated and unregulated rates described, *supra,* we found no benefit. Therefore, we determine that this program does not confer a bounty or grant.

D. *Government Credit Allocations.* Petitioner alleged that betwen 1973 and 1977, when Argentine banks "acted merely as collection agents for the central bank," the steel industry received a disproportionate share of available credit. This credit was alleged to have been available at interest rates below the rate of inflation.

We discussed the credit allocations with GOA officials and examined a report from the Central Bank concerning the Argentine financing system between 1973–1977. We found that during this period, the Central Bank could control all Argentine banks as part of a government-managed system of allocating credit. The government's design for credit allocation, however, consisted of general interest rate manipulations and guidelines for the total amount of credit to be allocated in the country. It did not call for specific rates or amounts of financing to specific industries. Therefore, we determine that these credit allocations did not confer countervailable benefits because they were not limited to a specific industry, group of industries, or to companies in specific regions.

E. *Loan Guarantees.* Petitioner alleged the GOA guaranteed loans to the steel industry. During the period of review, Propulsora had one outstanding supplier credit guaranteed by the Banco Ciudad de Buenos Aires, a government-controlled institution. Propulsora paid a guarantee fee to Banco Diudad de Buenos Aires that was higher than the guarantee fees it paid to private banks for comparable supplier credits. Therefore, we determine that the loan

guarantee to Propulsora does not confer a bounty or grant.

Somisa had a number of loans and supplier credits guaranteed by the GOA or official banks at no guarantee fee. For a discussion of the guaranteed loans during the period we found Somisa to be uncreditworthy, see the section entitled "Loans and Loan Guarantees During the Period We Consider Somisa Uncreditworthy." Concerning the guaranteed loans to Somisa during the period we found it to be creditworthy, we have found that standard practice for comparable transactions in Argentina does not involve a charge to the borrower by the shareholder guarantor for a guarantee. Since guarantees at no fee by a shareholder guarantor are the normal commercial practice, we determine that these guarantees do not confer a countervailable benefit on Somisa.

F. *Export Credit Insurance.* During the verification of the insurance program authorized under Law 22.593, described *infra*, we found that the GOA provides export credit insurance against political risk. This insurance program is administered on behalf of the GOA by a syndicate of private insurance companies that offers commercial export insurance. We examined annual reports providing information on the political risk insurance program for the fiscal years 1971 through 1983. The annual reports include the political risk insurance premiums received for the years 1971 through 1981. Also included are indemnities paid under the political risk insurance program, net of recuperations, for the years 1971 through 1983. All the data in the annual reports are presented in dollars. Indemnities paid from 1971 through 1983 account for 11.6 percent of premiums received from 1971 through 1981. The government has stated that the private syndicate charges 10 percent of premiums received to administer the political risk insurance program on the government's behalf. Based on these data, we determine that the premiums charged for political risk insurance are not manifestly inadequate to cover the long-term operating costs and losses of the program. Therefore, we find that the export credit insurance program for political risk does not confer a bounty or grant.

G. *Multiple Exchange Rate System.* Petitioner asked us to investigate whether the Argentine system of multiple exchange rates operates to provide countervailable benefits. In July 1981, the Central Bank of Argentina established a commercial rate of exchange which applied equally to all import and export transactions, and a financial rate of exchange that applied to all financial transactions. At the same time, the Central Bank allowed 10 percent of the f.o.b. value of "promoted exports" to be exchanged at the higher financial rate. This promotional aid for exports was abolished in December 1981 through Central Bank Circular "A" 84, which unified the exchange market again.

In July 1982, the market was split again. Under this split, exporters of "traditional goods" were eligible for the higher rate of exchange. Steel is not classified in Argentina as a traditional good. Then in September 1982, through Circular "A" 219, the Central Bank abolished the provision for exporters of traditional goods and authorized a split rate for all commercial operations. As specified in Circular "A" 219, the exchange rate which applied to 85 percent of the f.o.b. value of imports and exports was the commercial rate. The financial rate was applied to the remaining 15 percent of the f.o.b. value. Circular "A" 232 modified the 85/15 percent split for commercial operations in October 1982. The modification authorized 80 percent of the f.o.b. value of both imports and exports to be exchanged at the commercial rate. The remaining 20 percent could be exchanged at the financial rate. Circular "A" 241 unified the financial and commercial exchange markets again as of November 1, 1982.

During the period for which we are measuring bounties or grants, July 1982 through June 1983, we find that the Argentine system of multiple exchange rates did not confer a bounty or grant on the products under investigation. First, in July 1982, when the market was split and exporters of traditional goods received the higher financial rate, we find no bounty or grant because neither Propulsora nor Somisa export traditional goods and thus were not eligible for the higher financial rate of exchange. For the period September through October 1982, when the rate for commercial operations was split, we find no bounty or grant because the split generated, in effect, a uniform average rate that applied equally to both imports and exports (see *Energetic Worsted Corp.* v. *United States*, 53 CCPA 36 (1966)). Third, after November 1, 1982, there was no system of multiple exchange rates.

G. *Discounts of Foreign Currency Accounts Receivable under Circular RF-21.* During the verification at Somisa of pre-financing of exports through dollar-indexed peso loans, we found that Somisa paid off its pre-financing loan with the proceeds from discounting the accounts receivable for the shipment covered by the pre-financing. The discounting of foreign currency accounts receivable is authorized by Central Bank Circular RF-21.

The maximum discount rate charged by the intervening bank is 7.5 percent per year, and the minimum is 5 percent. Somisa and Propulsora received loans under circular RF-21 at 6 and 6.5 percent per year, respectively. The proceeds of the discounting are received in pesos. If any pre-financing loans are outstanding when the accounts receivable are discounted, the proceeds from the discounting must be used to pay off the pre-financing loan.

In Argentina, firms may not hold dollar accounts receivable for more than 180 days. After 180 days, Circular RF-21 requires firms to discount. In addition, Argentina law does not permit firms to prepay their dollar liabilities earlier than 180 days from purchase.

Under these circumstances, most firms would hold their dollar receivables until the 180th day when they are required to discount them. The information we received from Propulsora indicates that dollar receivables are held as long as legally possible.

We determine that this program does not confer countervailable benefits because the discount rates offered are set by the intervening banks between 5 percent and 7.5 percent. We have no evidence that the government has directed discount rates lower than the maximum and conclude such rates represent commercial bank practice in obtaining the highest rate the market will bear. We will examine the operation of this program in greater detail during our administrative review.

## III. Programs Determined Not To Be Used

We determine that the following programs, listed in the notice of "Initiation of Countervailing Duty Investigation," were not used by the manufacturers producers, or exporters in Argentina of cold-rolled carbon steel flat-rolled products.

A. *Forgiveness or Assumption of Debt.* Petitioner alleged there are indications that the Argentine government may have undertaken to pay the interest on at least a portion of debt for state-owned companies. We have found that Somisa is a "mixed company" under Argentine law, not a state-owned company, and that the GOA has never forgiven or mandated, directly or indirectly, the forgiveness of any debt or interest on debt contracted by Somisa or Propulsora, except for the 1978

agreement with Somisa discussed in the section on "Government Equity Infusions," *supra*. Therefore, we determine that except for the 1978 agreement with Somisa, neither Propulsora nor Somisa has received countervailable benefits as a result of direct or indirect government action to assume or forgive its debt.

B. *Medium- and Long-Term Loans.* Petitioner alleged that the Argentine steel industry, particularly Somisa, has benefited from government programs providing medium- and long-term loans on terms inconsistent with commercial considerations. We verified that Propulsora has not received medium- or long-term loans from any official institution. We found that Somisa has received loans from official banks during the period we considered it to have been uncreditworthy. These loans are discussed in the section entitled "Loans and Loan Guarantees During the Period We Consider Somisa Uncreditworthy," *supra*.

Petitioner cited Argentine Law 22.510, and Decrees 989/81 and 1894/83 as having provided loans to steel firms. Law 1894/83 was enacted after the period for which we are measuring bounties or grants. We received information from the GOA indicating that neither Law 989/81 nor Law 22.510 authorized loans to the respondent companies. Further, we verified all loans outstanding to the respondents during the period for which we are measuring bounties or grants and identified all loans from official entities, as discussed above.

C. *Trade Promotion Programs.* Petitioner alleged the Argentine steel industry receives countervailable benefits through trade promotion programs conductd by the government. The GOA stated that no trade promotion programs exist, and we found no evidence at verification that Propulsora or Somisa has used trade promotion programs.

D. *Tax Incentives.* Petitioner alleged the Argentine steel industry benefits from a variety of special tax incentives, including those provided under the Industrial Promotion Law of 1977, special tax treatment for state-owned enterprises, and certain exemptions available to firms locating in specified areas of Buenos Aires Province. We verified that neither Somisa nor Propulsora received tax benefits under the Industrial Promotion Law of 1977, nor under laws providing special exemptions for firms locating in specified areas of Buenos Aires Province. Regarding special tax treatment for state-owned firms, we verified that Somisa is not considered a state-owned company under Argentine law.

E. *Pre-Financing of Exports Under Circular OPRAC 1–1.* Circular OPRAC 1–1 instituted a pre-financing program for Argentine exports as an alternative to the Circular RF–153 program for pre-financing of exports through dollar-indexed pesos described *supra*. This program was initiated on August 21, 1981, and terminated on March 31, 1982. Under Circular OPRAC 1–1, loans could not exceed one year, and firms receiving OPRAC 1–1 loans could not also receive Circular RF–153 loans. We verified that Propulsora used this program, but that no loans under circular OPRAC 1–1 were outstanding during the period for which we are measuring bounties or grants. Somisa did not use this program.

F. *Labor Wage Freeze.* Petitioner alleged that recent wage freezes for public employees imposed by the GOA permit state-owned firms, including Somisa, to benefit from labor at subsidized wages.

Somisa has demonstrated that, because it is governed by the laws and regulations applicable to corporations of mixed private and public ownership, it falls outside the coverage of the wage freeze.

G. *Insurance Authorized by Law 22.593.* Subsequent to our preliminary determination, counsel to a party to the proceeding alleged that the GOA, through the National Reinsurance Institute, offered export insurance during the Malvinas/Falklands crisis under the terms of Law 22.593. We verified that under the terms of Law 22.593, insurance coverage is provided to all Argentine commercial traffic, whether domestic or export, affected by the "risks of war." The Malvinas/Falklands crisis ended on June 24, 1982. Accordingly, the insurance coverage under Law 22.593 was suspended because the "risks of war" no longer existed. We determined that insurance under Law 22.593 was not used by Propulsora or Somisa because the program was not in force during the period for which we are measuring bounties or grants.

H. *Subsidized Inputs of Raw Materials and Capital Equipment.* Petitioner alleged the Argentine steel industry receives indirect benefits as a result of subsidies provided by the government to suppliers of raw materials and capital equipment used by producers of cold-rolled carbon steel flat-rolled products. It specifically alleged that Decree 619 operates to direct benefits such as equity capital, loans, loan guarantees and tax deferrals to steel industry suppliers.

We verified that neither Somisa nor Propulsora received benefits under Decree 619. Somisa is Propulsora's primary domestic supplier and accounts for approximately 85 percent of domestic raw material inputs. Because Somisa did not receive any assistance under Decree 619, we determine that no benefits under Decree 619 were passed through to Propulsora.

Regarding Somisa, we found that one of its suppliers received assistance under Decree 619. In general, the assistance provided under Decree 619 is targeted to specific plant locations. The assistance provided to Somisa's supplier was specifically targeted to a plant that does not produce the input purchased by Somisa. Furthermore, the input provided by this supplier is relatively insignificant in terms of the final production cost of cold-rolled carbon steel flat-rolled products. During verification, we examined on a random basis Somisa's purchases of inputs. We found that these purchases (except for the purchase of oil residue coal discussed *supra*) were on commercial terms. In addition, we found no evidence that Somisa was related to any of its suppliers. Therefore, we determine that any benefits provided to Somisa's supplier under Decree 619 were not passed through to Somisa in the form of lower prices.

I. *Foreign Exchange Insurance.* Subsequent to the preliminary determination, counsel to a party to the proceeding alleged that the foreign exchange insurance program established by the government conferred a countervailable benefit on the product under investigation. We found at verification that this program is available to all industries and to all private borrowers in Argentina. Because this program is not limited to a specific industry or group of industries or to companies in specific regions, we determine that it did not confer a countervailable benefit on the product under investigation.

J. *Additional Programs Not Alleged.* In the notice announcing the initiation of this investigation, we stated our intent to investigate whether certain programs not specifically alleged by petitioner are providing bounties or grants to manufacturers, producers or exporters in Argentina of cold-rolled carbon steel flat-rolled products. The programs in question are:

- Grants from the government of Argentina
- Additional Reembolso for exports from southern ports

Our decision to investigate these programs was prompted by experience

developed in prior Argentine investigations and our view that they might be relevant to this investigation. Based on our analysis and verification of these programs, we determine that these programs were not used by repondents.

**Petitioner's Comments**

Comments raised by petitioner and parties to the proceeding that pertain to the Subsidies Appendix are addressed at the end of the Subsidies Appendix attached to this notice.

*Comment 1.* Petitioner contends that the benchmark for loans provided under the program for pre-export financing through dollar-indexed pesos should be a dollar interest rate.

*DOC Position.* We do not consider that a dollar interest rate is the appropriate benchmark for pre-export financing through dollar-indexed peso loans. These loans are provided in pesos with the principal indexed to the exchange rate. Because the pre-export financing loans are provided in pesos we believe that the benchmark should be a peso benchmark. As described *supra*, we used a weighted average of the regulated and unregulated rates, which we consider is representative of the national average commercial rate, as the benchmark for this program.

*Comment 2.* Petitioner argues that the exemptions of import duties are countervailable because the respondents did not provide any evidence that they are generally available.

*DOC Position.* Our reasons for finding import duty exemptions on raw materials countervailable are explained in the section in "Import Duty Exemptions" under "Programs Determined to Confer Bounties or Grants." In the same section, we also discuss our reasons for finding import duty exemptions on capital good not countervailable.

*Comment 3.* Petitioner contends that the Department must continue to find a country-wide rate because company-specific rates are used only when programs are limited specifically to certain companies and when a certification process is applied.

*DOC Position.* As specified in 19 CFR 355.28(a)(3), "if separate enterprises have received materially different benefits, such differences shall also be estimated and stated." Propulsora participated in only two of the six countervailable programs, while Somisa participated in all six. Furthermore, the companies received materially different benefits under the countervailable programs. Therefore, we think that company-specific rates are appropriate in this case.

*Comment 4.* Petitioner presented evidence that the Argentine Industrial Promotion Law (Law 21.608) concerning import duty exemptions has been amended by Law 22.876, which adds new "incentives for export trade."

*DOC Position.* Because this information on Law 22.876 was not presented to us until April 9, 1984, we are unable to consider it in this investigation. We will review this law in our administrative review. We verified that neither Somisa nor Propulsora was eligible for the incentives provided under the Industrial Promotion Law.

*Comment 5.* In its comments of April 9, 1984, petitioner made four new allegations. These concern an exemption of stamp taxes, capital incentives, government purchase of steel at a premium, and funds for the development of the steel industry under Law 20.086.

*DOC Position.* Because these allegations were not presented to us until April 9, 1984, we are unable to consider them in this investigation. We will consider them, however, in our administrative review.

*Comments by Parties to the Proceeding.* Counsel for Bethlehem Steel Corporation and for Republic Steel Corporation, Inland Steel Company, Jones and Laughlin Steel Incorporated and Cyclops Corporation (hereinafter "the Four"), who are parties to the proceeding, submitted comments.

*Comment 1.* Counsel for Bethlehem provided data on the corporate tax rate, national average cost of debt, value of outstanding debt and equity by company and the prime rate in Argentina for our use in calculating the weighted cost of capital. Further, they provided data for our use in calculating the national average rate of return on equity in the weighted cost of capital formula.

*DOC Position.* We did not use Bethlehem's data to calculate the national average rate of return on equity. Instead, we are using a national average rate of return calculated by FIEL. FIEL's calculation is based on data reported in *Prensa Economica.* The data in *Prensa Economica* are comparable to the data provided by Bethlehem except that *Prensa Economica* reports equity statistics as well as sales and profits. We did not use Bethlehem's corporate tax rate data because we no longer include this figure in our weighted cost of capital formula. We did not use the prime rates provided by Bethlehem because we consider the ones provided by FIEL, which are higher, to be more representative. We did use the other figures provided by Bethlehem.

*Comment 2.* Counsel for Bethlehem recommended that we use the inter-company rate for second line checks as the highest average spread above the average interest rate in Argentina for short-term foreign currency and domestic currency loans.

*DOC Position.* We received information indicating that the inter-company rate for second-line checks was not widely used in Argentina unitl August, 1983. Because this falls outside the period for which we are measuring bounties or grants, we did not consider using it as a spread above the benchmark for calculations in this investigation.

*Comment 3.* Counsel for Bethlehem argues that because there is virtually no long-term financing in Argentina, we should use the short-term rate it recommended for the national average cost of debt as the benchmark for long-term loans. This rate is the "effective rate for financial entities" between January 1982 and August 1983, and the inter-company rate for second line checks after August, 1983.

*DOC Position.* We did use the "effective rate for financial entities" as a benchmark for domestic loans to Somisa during the period we consider it to be uncreditworthy. We did not consider using the inter-company rate for second line checks because we received information that it was not widely used in Argentina unitl August 1983, which is after the period for which we are measuring bounties or grants.

*Comments 4.* Counsel for the Four contends that the Department erroneously used a peso interest rate in analyzing the pre-financing of exports through dollar-indexed pesos.

*DOC Position.* See the DOC position for petitioner's Comment 1, *supra.*

*Comment 5.* Counsel for the Four contends that the Department should have calculated a benchmark on the government guaranteed loan to Propulsora regardless of whether guarantee or other fees are paid. Counsel argues that the Department must look at what a company would pay absent the government guarantee.

*DOC Position.* We verified that Propulsora received other loans similar to the loan guaranteed by the official bank that were guaranteed by private banks. The guarantee fees paid to the private banks were comparable and in some cases less than the fees paid to the official bank. Therefore, we did not find the loan guarantee from the official bank to be inconsistent with commercial considerations.

*Comment 6.* Counsel for the Four contends that the Department

mistakenly treated as short-term loans what were, in effect, variable rate long-term loans.

*DOC Position.* Almost all domestic currency loans in Argentina, whether short- or long-term, have variable interest rates. These interest rates change on a monthly basis. A borrower only knows at the beginning of each month what the interest expense will be for that month. If the principal of the loan is indexed, a borrower may not know until two or three months after the relevant month what the real interest expense was for that month. Under these circumstances, we believe that it is reasonable to calculate variable rate long-term loans like short-term loans. However, we did not use the national average commercial rate as the benchmark. Instead, we used the "effective rate for financial entities" as published in *Business Trends,* plus the risk premium.

Regarding the foreign currency loans found to confer bounties or grants, the majority are charged an interest rate of Libira plus a spread. The benchmark for these loans is the Libira rate plus the average prevailing spread available in Argentina plus the risk premium. We consider that these loans should be calculated as short-term loans because the risk premium and the spread could vary substantially from year to year.

For those foreign currency loans with constant interest rates, we followed the standard methodology in the Subsidies Appendix to calculate the benefits.

*Comment 7.* Counsel for the Four contends that we should use the "unregulated rates" published by FIEL as the national average commercial rate for short-term loans because the weighted-average rates provided during verification include the regulated rate market, which is essentially a closed market except for OPRAC 1–9 loans.

*DOC Position.* In June 1982, the Argentine financial system was restructured and all outstanding loans, both short- and long-term, were restructured under a regulated rate established at the beginning of every month by the Central Bank. The size of the credit pool under the regulated rate increased every month. In August 1982, the Central Bank authorized the creation of two other credit pools, one with rates tied to the wholesale price index and the other with "unregulated" rates. The size of both these credit pools was restricted to a percentage of the borrowers' bank deposits on hand at these rates as of June 30, 1982. Therefore, all interest rates in Argentina were, in effect, regulated after June 1982. During the period from August 1982 through July 1983, the regulated rate accounted for approximately 73 percent of outstanding credit, the wholesale price index rate accounted for approximately 11 percent, and the "unregulated" rate accounted for 16 percent. We consider that a weighted average of all three rates provides the best representation of the national average commercial rate. Using the "unregulated" rate, as counsel suggests, might be a measure of the rate of interest available to a company at one point in time but does not reflect the average rate that all borrowers were charged during any specific period. The "unregulated" rate does not represent a national average of existing credit rates. Rather, it represents an alternative commercial rate that is only one of the rates used by companies during this period.

*Comment 8,* Counsel for the Four argues that the Department inappropriately chose the prime interest rate published by Morgan Guaranty as its discount rate for long-term loans.

*DOC Position.* In our preliminary determination, we used the Morgan Guaranty prime rate as the discount rate for long-term peso loans. During verification we found that these were not fixed-rate loans, but ones tied to the wholesale price index with the interest charges varying monthly. Therefore, we treated these loans as short-term loans, using as the benchmark the "effective rate for financial entities" pulbished in *Business Trends.*

There was one fixed-rate loan to Somisa during the period in which we consider it uncreditworthy. This loan was denominated in Swiss francs. We used a Swiss franc rate published in Morgan Guaranty's *World Financial Markets* to calculate both the benchmark and the discount rate.

*Comment 9.* Counsel for the Four contends that certain accounting practices used in the financial statements of Somisa are not in accordance with U.S. "generally accepted accounting principles" and that such practices may be distortive of the financial position of the company.

*DOC Position.* We used the financial statements of Somisa which were presented in accordance with the "generally accepted accounting principles" (GAAP) of Argentina and the supplemental financial statements in our determination of creditworthiness and equityworthiness. The financial statements are in accordance with the Argentine GAAP. The Argentine GAAP varies significantly from U.S. GAAP because it is inflation based. Given the high rate of inflation in Argentina, we consider that using the Argentine statements in our analyses is reasonable. When developing the specific information to be used for the ratios and other tests for creditworthiness and equityworthiness, we looked beyond the financial reporting practices to obtain the necessary information.

*Comment 10.* Counsel for the Four contends that the 2 percent discount of the regulated interest rate provided to companies that participated in the voluntary price control program was not generally available because Dr. Szewach of FIEL stated in the GOA's amended response that only 6 to 8 percent of all loans made in the regulated market enjoyed this discount.

*DOC Position.* Dr. Szewach's letter states that the impact of the 2 percent discount affected 6 to 8 percent of the total regulated market. We understand that the 2 percent discount, which was available to firms participating in the government's price control program, applied only to new credit that became available in the regulated market. We verified that many firms representing almost every industry in Argentina were participants in the GOA's price control program and thus were eligible for the discount. We do note, however, that we did not take the 2 percent discount into account in the national average commercial rate used for short-term loans because the GOA provided no supporting documentation to verify the 6 to 8 percent impact reported by Dr. Szewach.

**Respondent's Comments**

*Comment 1.* Counsel for Propulsora contends that the Department should issue company-specific countervailing duty rates.

*DOC Position.* We have used company-specific rates in this determination for the reasons specified *supra.*

*Comment 2.* Counsel for Propulsora argues that Propulsora should be excluded from this final determination because Propulsora received no countervailable benefits.

*DOC Position.* We determined that Propulsora participated in two countervailable programs, OPRAC 1–9 and import duty exemptions. In addition, the total *ad valorem* rate for Propulsora is not *de minimis.* Therefore, Propulsora cannot be excluded from this final determination.

*Comment 3.* Counsel for Propulsora contends that the Department should use inflation-adjusted rather than historical data in its analyses.

*DOC Position.* For our credit worthiness and equityworthiness decisions, we used the primary financial statements as well as the required

supplemental statements. Both sets of statements take into account, by different means and degrees, the effects of inflation. For the denominator used in calculating the *ad valorem* rate, we used inflation-adjusted figures. We also adjusted all benefits for inflation.

*Comment 4.* Counsel for Propulsora argues that the non-itemized taxes on domestic raw materials in the reembolso were verified and should be considered in our determination of whether the reembolso confers a bounty or grant on cold-rolled carbon steel flat-rolled products. Counsel also contends that certain variable costs meet the Department's standard of "physical incorporation." Finally, counsel contends that the effective reembolso received is 9.7 percent, not 10 percent, because of the commissions paid to foreign commissionaries.

*DOC Position.* In our review of taxes on domestic raw materials, we allowed those that were indirect and that met our standard for "physical incorporation." We also allowed the tax incidence claimed on certain variable cost items that we verified were physically incorporated into the final product.

We did not use 9.7 percent as the reembolso rate in comparing the allowable tax incidence to the level of the reembolso because this is the effective reembolso rate for only one firm; it was not demonstrated that this is the effective reembolso rate received by the industry as a whole.

*Comment 5.* Counsel for Propulsora contends that the statutory test for OPRAC 1–9 post-export financing is whether it is "inconsistent with commercial considerations." As such, we should use a company's own short-term borrowing experience to determine the benchmark, and not the national average commercial rate specified in the Subsidies Appendix. Counsel further contends that even if a national average is used, OPRAC 1–9 loans to Propulsora are non-preferential because the proper benchmark is the 30-day regulated rate, which accounted for 72 percent of the available credit from August 1982 through September 1983.

*DOC Position.* As outlined in the Subsidies Appendix, we consider that the appropriate benchmark for countervailable short-term loans is the national average commercial rate. We do not review the company's short-term loan portfolio to determine whether a short-term loan is inconsistent with commercial considerations because it is not likely that short-term loan rates would vary widely from the national average rate. Regarding what rate represents the national average commercial rate in Argentina during the relevant period, we consider that a weighted average of the three types of rates best represents the national average. The weighted average includes the regulated rate, the rate tied to the wholesale price index, and the "unregulated rate." All three of these rates were, in effect, regulated because either the rate itself was set by the Central Bank or the size of the credit pool was limited by it. We do not believe that using just the regulated rate set by the Central Bank, as counsel suggests, would represent the national average since approximately 25 percent of the existing credit was provided under the other two rates.

*Comment 6.* Counsel for Propulsora maintains that the Department erroneously found Somisa to be uncreditworthy from 1976 to 1983 because Somisa meets the "ways and means" test and because if the ratios are calculated on inflation-adjusted figures, Somisa would be creditworthy.

*DOC Position.* Our methodology for determining both the creditworthiness and the equityworthiness of a respondent is set forth in the "Analysis of Programs" section of this notice. We used the primary financial statements as well as the required supplemental financial statements in making our decision on Somisa's creditworthiness and equityworthiness. Using either set of statements, we would find Somisa to be uncreditworthy from fiscal years 1978/79 through 1981/82 and unequityworthy from 1977/78 through 1982/83. We find that Somisa does not adequately meet the "ways and means" test (*i.e.* whether dash flow adequately covers the principal and interest payments) because it did not generate enough cash to service its debt.

*Comment 7.* Counsel for Propulsora disagrees with the Department's calculations of Somisa's government loans and loan guarantees for the following reasons:

(1) The Department did not take into account commissions and other charges on the guaranteed loans;

(2) The Department used an annual Libor rate instead of the rate that reflects the actual timing of interest payments;

(3) The Department did not take into account the indexed principal on Somisa's peso loans; and

(4) The Department should not countervail the deferral of principal repayment on the peso loans because the principal is indexed.

*DOC Position.* In calculating Somisa's loan guarantees, the Department did not take into account commissions and other charges because we have no evidence that these charges are also included in the benchmark interest rate, which is usually the highest spread available in Argentina plus the appropriate base rate. Regarding counsel's second argument, for purposes of the final determination, we have used the Libor rate that reflects the actual timing of interest payments. Regarding counsel's third and fourth arguments, we have taken into account as part of the actual interest charge, the indexed principal on Somisa's peso loans. However, because we took into account the indexation when comparing the loan's interest rate to the benchmark interest rate, it would be inappropriate to also determine that the deferral of principal repayment is not countervailable simply because the principal is indexed.

*Verification*

In accordance with section 776(a) of the Act, we verified all data used in making this final determination.

*Suspension of Liquidation*

The suspension of liquidation ordered in our preliminary affirmative countervailing duty determination (49 FR 5151) shall remain in effect until further notice. The net bounty or grant for duty deposit purposes for each firm is as follows:

| Manufacturers/producers/exporters | Ad valorem rate (percent) |
|---|---|
| Somisa—Sociedad Mixta Siderurgica Argentina (Somisa) | 6.42 |
| Propulsora Siderurgica Saic (Propulsora) | 2.34 |
| All other companies | 5.44 |

In accordance with section 706(a)(3) of the Act, we are directing the U.S. Customs Service to require a cash deposit in the amount indicated above for each entry of cold-rolled carbon steel flat-rolled products from Argentina which are entered, or withdrawn from warehouse, for consumption on or after the date of publication of this notice in the Federal Register and to assess countervailing duties in accordance with section 706(a)(1) and 751 of the Act.

In accordance with section 751(a)(1) of the Act (19 U.S.C. 1675(a)(1)), we hereby give notice that we are commencing an administrative review of this order on April 26, 1984. For further information regarding this review, contact Richard Moreland at (202) 377–2786.

This suspension will remain in effect until further notice. This notice is published pursuant to sections 303 and 706 of the Act (19 U.S.C. 1303, 1671e).

Dated: April 18, 1984.

William T. Archey,

*Acting Assistant Secretary for Trade Administration.*

**Product Description Appendix**

For purposes of this investigation the term *"cold-rolled carbon steel flat-rolled products"* covers the following cold-rolled carbon steel products. Cold-rolled carbon steel flat-rolled products are flat-rolled carbon steel products, whether or not corrugated or crimped, whether or not painted or varnished and whether or not pickled, not cut, not pressed, and not stamped to non-rectangular shape, not coated or plated with metal; over 12 inches in width, and 0.1875 or more in thickness, as currently provided for in item 607.8320 of the *TSUSA;* or over 12 inches in width and under 0.1875 inches in thickness whether or not in coils, as currently provided for in items 607.8350, 607.8355, or 607.8360 of the *TSUSA.*

**Subsidies Appendix**

Certain types of capital and financial subsidies, including grants, loans, loan guarantees, and equity, have arisen in a number of countervailing duty proceedings. In Appendix 2 to the "Final Affirmative Countervailing Duty Determinations on Certain Steel Products from Belgium" (47 FR 39304, 39316) ("Appendix 2"), we explained our methodology for dealing with these and other issues. Since publishing Appendix 2, we have recognized a number of shortcomings in the theory and application of this methodology. To remedy these, we proposed certain revisions in Appendix II to our "Preliminary Affirmative Countervailing Duty Determinations on Certain Carbon Steel Products from Mexico" (49 FR 5142, 5148) ("Appendix II").

This appendix is a detailed explanation of the current countervailing duty methodology we use to examine grants, loans, loan guarantees, and equity. It supersedes the sections dealing with those issues in Appendix 2 and Appendix II. The revisions proposed in Appendix II have been substantially incorporated into this explanation, although this appendix also includes a number of further changes, principally in the areas of the weighted cost of capital, shape of the benefit stream, and the risk premium.

In this process, we have proceeded largely without any clear legislative guidance. Although the Trade Agreements Act of 1979 ("TAA") established certain rules concerning the calculation of the net subsidy (see 19 U.S.C. 1677(6), the TAA did little to clarify issues concerning the calculation of the gross subsidy, the issue with which this appendix chiefly is concerned. For example, the Report of the Senate Committee on Finance on the TAA merely states that: "The gross subsidy is the value of the subsidy provided, or made available, and used." (S. Rep. No. 96–249, 96th Cong., 1st Sess. 85 (1979)). The Senate Report does not suggest what the "value of the subsidy" is or should be. Even on the question of the allocation of subsidies, the legislative history reveals nothing more concerete than a directive that the Department use "reasonable methods." (*Id.*; see also, H.R. Doc. No. 96–153, Part II, 96th Cong., 1st Sess. 433 (1979); H.R. Doc. No. 96–317, 96th Cong. 1st Sess. 75 (1979)). Furthermore, the Signatories to the "Interpretation and Application of Articles VI, XVI, AND XXIII" ("the Subsidies Code"), which is implementated by the TAA, have not yet reached agreement upon rules governing the calculation of subsidies, as envisioned under Article 4, paragraph 2, footnote 2 ("An understanding among signatories should be developed setting out the criteria for the calculation of the amount of the subsidy.")

Given this background, we maintain that we have "wide latitude" in which to determine the value of a subsidy. (See *United States* v. *Zenith Radio Corp.*, 437 U.S. 443 (1978)). In our opinion, all that is required of us is that the methods we adopt be reasonable.

We believe that the methodology in this appendix meet the requirement of reasonableness.

We recognize that there may be alternative methods of calculating the gross value of a particular type of subsidy. A number of such methods were proposed by parties to these proceedings. As the principal institution responsible for administering the countervailing duty law, we selected those methods that we believe best implement the policies and purposes of that law.

**I. Allocating Benefits Over Time**

Funds provided under government direction or directly by the government provide a subsidy to the extent that the recipient pays less for the funds than it would on the market. In the case of a loan, this is the difference between the cash flows—the company's receipts and payments—on the loan under examination and the cash flows for a comparable commercial loan taken out by the same company. For equity, it is the difference between what the government paid for a share of the company and what the market would have paid for the share. For grants, the saving to the recipient is the face value of the grant; that is, the difference between what the company paid for the funds (nothing), and what it would have to pay on the market to receive the funds (the face value of the grant). The difference in cash flows can arise in a single moment, as with grants (complete receipt of the funds at once), or over several years, as with long-term loans (through periodic repayment).

The point(s) at which the difference in cash flows occurs does(do) not always coincide temporarily with the economic effect of the benefit, and therefore does(do) not necessarily provide an appropriate schedule for assessing countervailing duties. The economic effect of the benefit is diffused around the time that the cash flow differential occurs. For example, it would be inappropriate to allocate a $1 billion grant received on March 17, 1981, entirely to March 17, 1981. The grant continues to benefit the company after that date, and thus we would not counteract the economic effect of the grant by assessing countervailing duties to products exported on only that single day. Therefore, to counteract the economic effects of such actions, we must determine an appropriate period over which to allocate benefits, and decide how much of the benefit to allocate to each subperiod (usually a year). In addition, we must choose a discount rate to reflect the time value of money; that is, the fact that a given nominal amount of money has a changing real value over time.

The calculation of some types of subsidies, therefore, is a three step process. First, we must calculate the difference in cash flows between the countervailable program and the appropriate market alternative. Second, we must choose a discount rate for allocating money over time. And third, we must determine a reasonable shape and lenght for the stream of benefits.

The first step is described under the separate sections below on grants, loans, and equity. In this section, we first consider the discount rate and then discuss the construction of the benefit stream.

*A. The Discount Rate*

Prior to the cases on certain steel products initiated on February 1, 1982, we allocated the face value of benefits with effects extending beyond the period of receipt in equal increments, over the appropriate time period. In each year we countervailed only that year's allocated portion of the total subsidy. For example, a grant of $100 million spread over 10 years would have been countervailed at a rate of $10

million per year for 10 years, beginning in the year of receipt:

This allocation technique was criticized for not capturing the entire subsidy in that it ignores the fact that money has a changing value as it moves through time. It has been argued that $100 million today is much more valuable to a recipient than $10 million per year for the next 10 years, since the present value (the value in the initial year of receipt) of the series of payments is considerably less than the amount if initially given as a lump sum. We agree with this position, and, in 1982 we changed our methodology of subsidy calculation accordingly (see Appendix 2). As long as the present value (in the year of subsidy receipt) of the amounts allocated over time does not exceed the face value of the subsidy, we are consistent with both our domestic law and international obligations in that the amount countervailed will not exceed the total net subsidy.

The present value of any series of payments is calculated using a discount rate. The discount rate is a measure of the company's time preference for money. If a company is indifferent between receiving $1.00 today and $1.1 next year, its discount rate for the intervening year is 12 percent. We choose a discount rate such that the present value of the cash stream remains constant. For example, if a company receives a countervailable grant of $1000 in 1977, we wish to countervail no more or less than 1000 1977 dollars, regardless of the period over which we allocate the benefit.

A company's time preference for money is determined by it expected rate of return on investment and operations at the time the subsidy is received. This expected rate of return is often called the "opportunity cost of capital." Since this is not easily quantifiable or verifiable, we must choose a surrogate that accurately reflects the company's expected rate of return. We consider the company's actual cost of raising money, or the "weighted cost of capital," as the best surrogate for measuring the expected rate of return, since a rational company will raise money (through debt and/or equity markets) to the point at which the cost of raising any additional money is greater than its expected rate of return from those funds.

When considering the cost of capital, we seek to determine the marginal cost facing the company at the apropriate time. For our purposes, therefore, the weighted cost of capital is the marginal cost of each type of financing used by the company (usally debt and equity), each weighted by its relative proportion.

We weight-average the marginal costs of debt and equity by each company's total existing proportions of debt and equity. Marginal proportions of debt and equity, although more desirable in theory, are not readily identifiable. Because borrowing and issuing equity do not occur with regular frequency, any choice of a recent period to serve as a marginal measure of relative debt and equity usage would be arbitrary. Morever, by using total existing proportions, we avoid making a highly speculative guess as to how operations and investment would have been financed absent the subsidy. Because we cannot know how a company would have raised money absent the subsidy program, we assume that the company will use debt and equity in the same proportions at the margin as it has done historically.

For the marginal cost of debt, we prefer to use the commercial rate on bonds issued by the company, or an interest rate on long-term commercial loans received by the company in the period for which we are calculating the discount rate.

In Appendix II, we included a tax adjustment to the marginal cost of debt variable, to account for the fact that taxes normally are not paid on interest, thus lowering the cost of debt to the firm by the amount of taxes not paid. We have decided to abandon the tax adjustment because it is inconsistent with our policy of disregarding the secondary effects, including tax effects, of subsidies.

A company's marginal cost of equity is a function of three variables: a) the risk-free rate on alternative investment, b) the commercial investor's anticipations of the future rate of return on the equity market as a whole, and c) the riskiness of investment in that company relative to the market. Because the latter two factors are not easily identifiable, we cannot calculate a company's actual marginal cost of equity. As a surrogate, we have used the company's marginal cost of debt (which reflects the risk-free rate and the company's riskiness), plus the difference between the national average rate of return on equity and the national average cost of debt (which reflects the anticipated future rates of return on the equity market). We cannot observe the anticipated rate of return on the equity market, and so we have used the actual rate of return on equity for calculating the second variable.

Because equity normally is riskier than long-term debt, investors demand a higher return on equity than on lending. That is, the cost of equity (the *expected* rate of return of equity) is greater than the cost of long-term debt (its interest rate). Our use of an historical measure or as a surrogate for expected returns on equity, however, can lead to the illogical result that the measurement for the cost of equity will be less than that for the cost of debt.

When investors' prior anticipations if rates if return on equity are not realized fully in the present period, the actual rate of return on equity may be less than the cost of debt. The cost of debt may also be greater than the cost of equity when less risky firms finance relatively more with equity, while more risky firms finance relatively more by borrowing. To adjust for such an anomaly, we have set a floor on the surrogate used to measure the national cost of equity. This floor is the national cost of debt. For our purposes, the weighted cost of capital in no instance will be lower than the cost of long-term debt.

We also must consider the appropriate point in time at which to determine the weighted cost of capital for discount rate purposes. Where a grant or a loan is received in a year after the year in which agreement is reached on the principal terms of the grant or loan, we will determine the weighted cost of capital using the year in which agreement was reached rather than the year of receipt or year in which an agreement was concluded formally.

We note that we may not be able to apply in all cases a discount rate based on weighted cost of capital as described above. This is because we may not be able to obtain information such as the national average long-term debt cost or rate of return on equity. In such cases we then fall back to the next best surrogate available based on the particular facts of the case. For example, for national average rate of return on equity, we may average returns on equity for some number of particular companies. If we believe that the information necessary to construct a reasonable weighted cost of capital figure is unavailable, we generally use instead the company's cost of long-term debt. Possible subsequent choices, in order of general preference, are national average long-term debt costs and the prime interest rate.

Since issuing Appendix II, our experience with applying the weighted cost of capital has been marked by difficulties in finding the required information within the limited time frame for countervailing duty investigations allowed by the Act. Indeed, we have discovered that, in developing countries, necessary information, such as meaningful

national average rates of return on equity and long-term interest rates for loans in the home country, may not be available at all. Although we will continue our attempts to use the weighted cost of capital in future cases, we may be forced to change this practice if difficulties in finding the information systematically prohibit us from using it as a discount rate.

*B. Construction of the Benefit Stream*

To allocate subsidies over time, we need to construct a stream of benefits. In Appendix II, we continued to use an annuity-style schedule, which allocated equal nominal payment to each subperiod. We noted several reasons why we used the annuity-style method instead of the alternative preferred by one judge of the Court of International Trade, the declining balance method. (see *Michelin Tire and Rubber Co. v. United States* (6 CIT ———, Slip Op. 83-136), December 22, 1983) ("Michelin"). First, we argued that the method that gave equal nominal payments was more administratively feasible than the declining balance method. Second, we stated that the declining balance method could result in countervailing duties whose present value exceeded the nominal amount of the subsidies in the year of receipt. Third, we argued that the declining balance method would require us to assign a time value to the portion of a large grant in the year of receipt, which was inconsistent with our decision to allocate very small grants with no time value adjustment to one year only. We have since adjusted the basic declining balance formula so that the amount of the subsidy in the first year will not exceed it s nominal value. Our declining balance formula also treats small grants and the first year portion of large grants equally. Given that the declining balance method is only slightly more difficult to apply than the annuity-style method, we do not consider administrative feasibility to be a sufficient reason in this case for our continued reliance on the latter. Although both types of methods are reasonable, we have decided to use the declining balance method. We use this method of allocation, coupled with the discount rate, to allocate certain benefits conferred by grants, loans, guarantees, and equity purchases.

**II. Grants**

In addition to constructing the shape of the allocation stream, we must decide the period over which to allocate benefits. Since the difference in cash flows for grants occurs at only a single moment (when the grant is received) cash flow does not provide guidance in how to allocate the benefit.

It does not help to hypothesize how the company would have raised the funds absent the grant. Firms raise money primarily through sales, secondarily through debt, equity, and non-operating income. Grant money does not resemble any one of these more than any other; all require an obligation in return for the money, which the grant lacks. Moreover, for all of the alternative ways of raising money except debt, it does not make sense to ask the duration of the obligation; the duration of a sale is in some ways near zero, and the duration of equity is in some ways infinite.

We have previously used the average useful life of renewable physical assets in the industry involved as the allocation period. We considered the benefit of a grant to last in some way as long as the average turnover of assets in the industry. However, we recognize first that physical assests are often a fairly small part of the costs of doing business, and second that even in highly capital intensive industries the benefit of funds received—whether from sales, debt, equity, or grants—has no particular relationship to the life of the machinery.

We have concluded that there are no economic or financial rules that mandate the choice of an allocation period. The administering authority therefore must set a standard and hold to it as consistently as possible to allow its actions to be predictable. We have received no objections to the period proposed in Appendix II, and continue to prefer the average useful life of renewable physical assets as the period over which to allocate grants. By using the life of the company's renewable physical assets as our period of allocation, we are simply stating that the effects of a grant, in whatever form, can be spread reasonably over the time in which the company rolls over its renewable physical assets.

In Appendix 2 we allocated soley to the year of receipt all grants of less than one percent of a company's gross revenues. As a result, under Appendix 2 we would find no subsidies (and make a negative determination) for a firm that received only a grant of one percent of the company's gross revenues, because that grant would be allocated over time. However, we would find subsidies for a firm receiving soley a grant of .75 percent of the firm's gross revenues, since that amount would be allocated soley to the year of receipt and would not be *de minimis*. To prevent this anomaly, we will total all grants. If the sum is less the .5 percent of all sales concerned for domestic subsidies or of all export sales concerned for export subsidies, we will allocate such grants only to the year of receipt.

We will allocate all other grants over the average useful life of a company's renewable physical assets (equipment), as determined by U.S. Internal Revenue Service (IRS) in the 1977 Class Life Asset Depreciation Range System (Rev. Proc. 77-10, 1977-1 C.B. 548 (RR-38)). The use of other alternatives, such as accounting useful life as reflected in company records, or tax tables of the country in which the company is based, may yield extremely inconsistent results between companies or between countries. We continue to rely on IRS tax tables as our source because they provide the most practical and fair means of determining average useful life.

**III. Loans and Loan Guarantees**

*A. Long-Term Loans and Guarantees for Companies Considered Creditworthy*

In these investigations, various loan activities give rise to subsidies. The most common practices are the extension of a loan on preferential terms or on terms inconsistent with commercial considerations where the government is either the actual lender or directs a private lender to make funds available, or where the government guarantees the repayment of the loan made by a private lender. The subsidy is computed by comparing what a company would pay a normal commercial lender in principal, interest, and other charges in any given year with what the company actually pays on the preferential loan in that year. We determine what a company would pay a normal commercial lender by constructing a comparable commercial loan at the appropriate market interest rate ("the benchmark") reflecting commercial terms.

In Appendix 2, we generally used the national average commercial interest rate as the benchmark. We compared the loan at issue with what the average commercial borrower would have to pay for a loan of similar principal and duration. Upon reconsideration, we have decided that the benchmark for long-term loans will be company-specific, unless the company lacks adequate comparable commercial experience. If the latter, then we will use a national average loan interest rate or the debt experience of a comparable company as the best information available for creditworthy firms. Use of a company-specific benchmark for long-

term borrowing enables us to capture the fact that certain companies are more (or less) risky than average, and that commercial lenders will take these risk characteristics into account in setting the conditions of the loan.

For loans denominated in a currency other than the currency of the country concerned in an investigation, the benchmark is selected from interest rates applicable to loans denominated in the same currency as the loan under consideration (where possible, interest rates on loans in that currency in the country where the loan was obtained; otherwise, loans in that currency in other countries, as best evidence). The subsidy for each year is calculated in the foreign currency and converted at an exchange rate applicable for each year.

After finding an appropriate benchmark loan, the next step in determining if, and if so, to what extent, a loan was given on terms inconsistent with commercial considerations is to calculate the payment differential between the benchmark loan and the loan at issue in each year. When then calculate the present value of this stream of benefits in the year the loan was made, using the weighted cost of capital (as described above) as the discount rate. In other words, we determine the subsidy value of a preferential loan as if the benefits had been bestowed as a lump-sum grant in the year the loan was given. This amount is allocated over the life of the loan, using our methodology for allocating benefits over time described above, to yield the annual subsidy amounts.

If a borrowing company receives a payment holiday that is inconsistent with commercial considerations, the subsidy value of the payment holiday is captured in the comparison of the annual payments on the loan at issue with the annual payments on a normal commercial loan with a normal repayment schedule. A payment holiday early in the life of a loan can result in such large loan payments near the end of its term that, during the final years, the loan recipient's annual payments on the subsidized loan may be greater than they would have been on an unsubsidized loan. By reallocating the benefit over the entire life of the loan through the present value methodology described above, we avoid imposing countervailing duties in excess of the net subsidy.

Because loans, unlike grants, have a readily identifiable effect on the company over time, we allocate the benefits over the life of the loan, even for loans expressly given to purchase costly capital equipment. We do not believe a contrary result for loans "tied" to capital equipment is required by the Act.

Loan guarantees are countervailable only if they are provided to a specific industry or group of industries and only if they are on terms inconsistent with commerical considerations. For a creditworthy company, a loan guarantee by the government constitutes a subsidy to the extent the guarantee assures more favorable loan terms than for an unguaranteed loan. To determine if the guarantee is inconsistent with commercial considerations, we first compare the cost of the government loan guarantee with the cost of commercial guarantees. If no difference between government and commercial loan guarantee costs is evident, we then look to see if the government loan guarantee has affected the other terms of the loan.

A special case arises when the government acts as both guarantor and principal owner or majority shareholder of a company. Under these circumstances, a government guarantee is not countervailable if it is normal commercial practice in that country for owners or shareholders to provide guarantees on comparable terms to their companies (see "Final Affirmative Countervailing Duty Determination on Carbon Steel Wire Rode from Trinidad and Tobago"(49 F.R. 480 (January 4, 1984)).

*B. Long-Term Loans and Loan Guarantees for Companies Considered Uncreditworthy*

In our view, a company is uncreditworthy if, absent future government support, it would not have been able to obtain commercial loans comparable to those which it did obtain. We consider a company creditworthy if it appears that it will have sufficient revenues or resources to meet its costs and fixed financial obligations, again absent future government intervention. To determine the creditworthiness of a company we analyze its present and past health, as reflected in various financial indicators calculated from its financial statements and accounts. We give great weight to the company's recent past and present ability to meet its costs and fixed financial obligations with its cash flow. Where available, we also consider evidence of the company's future financial position, such as market studies, country and industry economic forecasts, and project and loan appraisals. Because the determination is often highly complex, we consider each case carefully in light of the evidence on the record.

In Appendix 2, we calculated the benefit of a long-term loan to a company considered uncreditworthy by treating it as a countervailable equity infusion and applying our equity methodology. At the time, we stated our preference for using a loan-type calculation to measure the benefit, with a suitable risk premium added to the benchmark. However, we could not find any reasonable and practical basis for selecting a risk premium. Thus, in 1982, we settled for the equity approach, even though we were aware of the flaws in our equity methodology, as discussed in Appendix II.

We now believe that we have a practical and reasonable way to calculate a risk premium. For our purposes, a risk premium is the amount above the highest commonly-available commercial interest rate a creditworthy borrower would have to pay in order to receive a loan. The magnitude of the risk premium is determined solely by the lender's assessment of the riskiness of the company. Thus, to construct a risk premium, we need an observable measurement of risk, as determined by lenders. U.S. bond ratings provide us with such a measurement, since the difference between interest rates associated with different bond ratings are determined solely by risk.

Having settled upon U.S. bond ratings, we must now determine the appropriate spread to adopt as our risk premium. In Appendix II, we proposed using the interest rate spread between the lowest commonly observed bond rating for creditworthy companies and the second lowest, on the basis that the last increment of risk within the range of bond ratings for creditworthy companies best represented the difference in risk between a marginally creditworthy company and an uncreditworthy company. We now consider this spread to be inappropriate, since the difference in risk between the least creditworthy company and the next-to-least creditworthy company has very little relation to the difference in risk between the least creditworthy company and an uncreditworthy company. The spread proposed in appendix II does not reflect the fact that a company's level of risk increases dramatically once it becomes uncreditworthy. A more appropriate measure of the risk between a marginally creditworthy company and an uncreditworthy company is the difference in interest rates associated with the difference between the least creditworthy and most creditworthy bond ratings. Although it is impossible to quantify the risk of an uncreditworthy company precisely, we believe that this spread comes closer to measuring the dramatic increase in risk in lending to

an uncreditworthy company than the spread proposed in Appendix II.

For purposes of these final determinations, we have used the difference between *Moody's* Aaa and Baa corporate bond rates. We then calculated the precentage this difference represents of the prime interest rate in the United States. This precentage is applied to the prime interest rate in the country concerned. The resulting risk premium is then added to the highest long-term commercial interest rate commonly available to companies in that country.

We believe this method is practical. Moreover, it seems reasonable, since the spread in riskiness among companies in the United States, which has a highly sophisticated bond market, reasonably reflects market forces determining a measurement of risk. By applying our risk premium, we expect to achieve a meaningful measure of the value to uncreditworthy companies of government support in obtaining loans. As under Appendix 2, we will not impose greater countervailing duties for a subsidized loan (to a creditworthy or an uncreditworthy company) than for an outright grant in the amount of the loan principal, because a loan cannot be worth more to a company than an outright grant of the same amount.

*C. Short-Term Loans*

Short-term loans (one year or less), like long-term loans, are countervailable to the extent that they are preferential or given on terms inconsistent with commercial considerations. To determine the commercial soundness of short-term loans, we compare the terms on the loan at issue with a benchmark; that is, a comparable commercial loan. Since short-term looans are received and repaid within a year, we allocate any benefits to one year only. Therefore, we do not need to employ present value analysis for short-term loans.

For our benchmark, we use the most appropriate national average commercial method of short-term financing, rather than company-specific experience. We believe the distinction between our treatment of short-term and long-term loans is valid. Lending short-term generally is not as risky as long-term, because of the shorter duration of the repayment obligation and the greater frequency of accompanying security (for example, accounts receivable). Because there is little need for the lender to vary its terms to account for varying risk characteristics among companies, we would not expect company-specific short-term loan terms to vary from national average terms. Additionally, because of the enormous number of short-term loans involved in many cases, the use of company-specific benchmarks would significantly impair our ability to administer the countervailing duty law within the short time limits established by the Act.

We do not treat uncreditworthy companies differently from creditworthy companies when calculating benefits from short-term loans, because of the low level of risk associated with short-term debt, and the frequent existence of security.

*D. Forgiveness of Debt*

Where the government has permanently assumed or forgiven an outstanding debt obligation, we treat this as a grant to the company equal to the outstanding principal at the time of assumption or forgiveness. Where outstanding debt has been converted into equity (that is, the government receives shares in the company in return for eliminating debt obligations of the company), a subsidy may result. The existence and extent of such subsidies are determined by treating the conversion as an equity infusion in the amount of the remaining principal of the debt. We then calculate the value of the subsidy by using our equity methodology explained below.

**IV. Equity**

It is well settled that government equity ownership *per se* does not confer a subsidy. Government ownership confers a subsidy only when it is on terms inconsistent with commercial considerations.

If the government buys previously issued shares on a market or directly from shareholders rather than from the company, there is no subsidy to the company. This is true no matter what price the government pays, since any overpayment benefits only the prior shareholders and not the company.

If the government buys shares directly from the company (either a new issue or corporate treasury stock) and similar shares are traded in a market, a subsidy arise if the government pays more than the prevailing market price. We strongly prefer to measure the subsidy by reference to market price. This price, we believe, rightly incorporates private investors' perceptions of the company's future earning potential and worth.

It is more difficult to judge the possible subsidy effects of government equity purchases where there is no market price for the shares (as where, for example, the government is already sole owner of the company). In such cases, we must determine the commercial soundness of government equity purchases by assessing the prospects of the company at the time those purchases were made.

To be "equityworthy," a company must show ability to generate a reasonable rate of return within a reasonable period of time. In making our equityworthiness determinations, we assess the company's current and past financial health, as reflected in various financial indicators taken from its financial statements, and, where appropriate, internal accounts. We give great weight to the company's recent rate of return on equity as an indication of financial health and prospects. Like our creditworthiness tests, our equityworthiness analysis also takes into account the company's prospects, as reflected in market studies, country and industry forecasts, and project and loan appraisals, when these types of analyses are available.

For government equity purchases which we deem inconsistent with commercial considerations, we measure the benefit by multiplying the difference between the company's rate of return on equity and the national average rate (the "rate of return shortfall") for the review period by the total amount of the equity purchases made in years in which the company was unequityworthy. Under no circumstances do we countervail in any year an amount greater than that which is calculated treating the government's equity infusion as an outright grant.

* * * * *

**COMMENTS BY PARTIES TO THE PROCEEDING**

**I Allocating Benefits Over Time**

*A. The Discount Rate*

*Comment 1.* Petitioner, Bethlehem, and the Four argue that the cost of debt variable in the Department's weighted cost of capital formula should not be adjusted for taxes. This adjustment, they contend, is contrary to the Department's long-standing practice of not taking into account the tax effects of subsidies, a policy which has been upheld by the Court of International Trade (see Michelin). Petitioner further states that such an adjustment constitutes an impermissible offset to the gross subsidy.

*DOC Position.* The discount rate is simply a means of allocating benefits over time when calculating subsidies such as grants, loans, and equity infusions. However, because it has an effect on the magnitude of the benefit, there is no clear distinction between the tax effect on the discount rate and tax effects on subsidies. Therefore, we have removed the tax adjustment in our weighted cost of capital formula.

*Comment 2.* Petitioner states that the company-specific debt variable of our weighted cost of capital formula should include a "risk premium" for all uncreditworthy companies.

*DOC Position.* We agree. For our purposes, the weighted cost of capital is the cost of commercial financing facing the company. Since the risk premium, in a sense, is part of the commercial cost of debt facing an uncreditworthy company, we now include it in the marginal cost of debt variable in our weighted cost of capital formula.

*Comment 3.* Bethlehem argues that the Department should not rely exclusively on its cost of equity surrogate for all cases. Where available, the Department should consider alternative measurements of the cost of equity, such as rates of return expected by venture capitalists and "turn around" experts, or rates of return based upon "beta," or risk factor, analysis.

*DOC Position.* The alternative ways of estimating the cost of equity suggested by Bethlehem are more speculative and much more difficult to apply than the methodology we outline in this appendix. Therefore, we will continue to apply our methodology for determining the cost of equity.

*B. Construction of the Benefit Stream*

*Comment 4.* Petitioner and the Four contend that the Department should use the declining balance method, as opposed the annuity-style method, to allocate benefits over time. They maintain that the declining balance method is only slightly more difficult to apply than the annuity-style method and that the switch from one method to the other would require only a slight change in the Department's computer program. They further argue that the declining balance method does not affect small grants allocated to the year of receipt. The Department's argument that the use of the declining balance method may result in a present value whose nominal value exceeds the subsidy in the year of receipt is circular, in that it *assumes* that the correct present value is calculated by using an annuity-style method. In addition, the Four assert that the annuity-style method "backloads" the subsidy.

*DOC Position.* For the reasons expressed above in this appendix, we have adopted a declining balance formula.

*Comment 5.* Bethlehem holds that the annuity-style method of allocating benefits is appropriate where commercial debt and equity financing are likely financial alternatives. Bethlehem bases its argument on the fact that the Department has no way to estimate the likely benefits in different years. Thus, Bethlehem concludes that the use of a constant figure over time is acceptable.

*DOC Position.* The choice of a method of allocating long-term benefits is not necessarily related to the form of repayment that the alternative financing might take. Although we are aware of several possible methods of allocating benefits, none of them is clearly superior to the others, and none of them is mandated by the Act or its legislative history. Having selected a reasonable method, we hold that the same method should be used to allocate all long-term benefits, as long as our choice is reasonable. By consistently using the same method, we avoid speculating on the form of the financing foregone.

II. Grants

*Comment 6.* Although not objecting in this case to the allocation of grants over the average useful life of the equipment, Bethlehem disapproves of the Department's focus on the use to which the funds were allegedly put.

*DOC Position.* Again, we are aware of several reasonable choices of periods over which to allocate grants, but none of them is clearly superior to the others, and none of them is mandated by the Act or its legislative history. We originally chose the average useful life of the assets because we believed the benefits of a grant somehow had a life approximating the life of assets (see Appendix 2). We now consider this belief wrong; the life of the benefits is not observable. However, because we have never received objections to our useful life approach, and have not found any more reasonable period over which to allocate grant benefits, we will continue to use average useful life of the company's renewable physical assets.

III. Loans and Loan Guarantees

*A. Long-term Loans and Loan Guarantees for Companies Considered Creditworthy*

*Comment 7.* Bethlehem states that the use of present value methodology in the Department's loan calculations is unnecessary in cases where the only difference between the terms of the countervailable loan and the benchmark loan is the interest rate.

*DOC Position.* The Department applies the present value methodology in its loan calculations because, as explained above in this appendix, it allows us to countervail only the net subsidy in cases where, because of a payment holiday in the early life of the loan, the annual payments on the subsidized loan are greater than those on the unsubsidized loan. While it is true that the present value method normally does not produce a result that is materially different from that of a calculation based only on the difference between repayment schedules, it allows us to treat all loans in a like manner. For the sake of consistency, therefore, we continue to use the present value method in all of our long-term loan calculations.

*Comment 8.* The Four assert that the Department should not declare a loan not countervailable on the basis that unspecified amounts of additional charges, such as guarantees, currency exchange requirements, or security, raise the effective cost of the loan at issue above those on the benchmark loan. Rather, the Department must choose a benchmark and compare it with the potentially countervailable loan.

*DOC Position.* We agree. Before a loan can be considered not countervailable, we compare the quantifiable terms of the alleged countervailable loan with a commercial benchmark. Where possible, we compare the cost of the government guarantee with that of a commercial guarantee.

*B. Loans and Loan Guarantees to Companies Considered Uncreditworthy*

*Comment 9.* The Four propose an alternative, which it terms the "creditworthiness proxy," to our risk premium methodology as a means of valuing long-term loans to uncreditworthy companies. This alternative involves calculating the minimum cash flow available to cover interest charges that is considered necessary by lenders before they will give a company a commercial loan. The difference between the company's actual cash flow and the minimum cash flow amount should be treated as a grant. This method, the Four point out, is relatively easy to administer and serves as a reasonable proxy for the effect of government involvement on the company's ability to borrow on the market. The Four provide statements of experts in support of this method.

*DOC Position.* Although the Four's proposal has some merit, we are concerned by the absence of any tangible link between the amount being countervailed (the shortfall in cash flow) and the program at issue (loans). For example, under this method, a loan of one dollar to an uncreditworthy company could result in a net subsidy of one million dollars if one million dollars were the difference between the company's actual cash flow and the

minimum cash flow. In addition, the minimum cash flow requirement chosen is arbitrary and does not represent a reasonable benchmark for creditworthiness across companies. while the requirement suggested by the Four may indeed be a common "rule of thumb" popular in American banking circles, we have no evidence that it is generally applicable to all countries. For the time being, therefore, we prefer the risk premium to the creditworthy proxy method.

*Comment 10.* Petitioner proposes that we use the highest commonly observed interest rate as the risk premium, arguing that it is a "well tested rule that the risk of doing anything new requires an uncertainty premium at least as high as the interest rate.

*DOC Position.* We have not been presented with enough evidence to assess the reasonableness of petitioner's proposal. At present, we do not believe that petitioner's method is superior to our own.

*Comment 11.* Petitioner and Bethlehem maintain that, if the Department uses an interest rate spread derived from U.S. bond ratings for its risk premium, at the least if should use a larger spread, instead of the spread between the least (Baa) and next-to-least (A) creditworthy ratings. Both petitioner and Bethlehem contend that the spread used by the Department in its preliminary determinations in these investigations understates the subsidy, because there is no relation between the riskiness of loans to creditworthy companies and those to uncreditworthy companies. Petitioner argues that at a minimum, the Department should use the spread between A and C bonds. Bethlehem contends that the appropriate spread is that between Baa bonds as publishsed by *Moody's* and an average of a list of Ba, B, Caa, Ca, and C bonds, which the Department should compile by contacting investment banker, insurance companies, and other significant sources of debt capital.

*DOC Position.* For the reasons stated above in this appendix, we are using the bond rating spread from Baa–Aaa to calculate the risk premium. This is the largest regularly published bond rating spread we have been able to find.

*C. Short-Term Loans*

*Comment 12.* The Four maintain that the Department must use effective interest rates in its calculation of the benefits from countervailable loans.

*DOC Position.* The magnitude of the benefit from loans is a function of the difference between the cost of the loan under examination and the cost of the benchmark loan. Ideally, we attempt to quantify the total effective cost of each type of loan in our comparisons. However, the charges added on to the nominal interest rates for each loan cannot always be quantified. In these cases, we base our calculations on the difference between the quantifiable equivalent terms of both loans. Thus, we use nominal interest rates in our calculations when we are unable to quantify additional equivalent terms.

*Comment 13.* Bethlehem argues that the Department should calculate the benefit from short-term loans by using company-specific benchmark interest rates instead of national average rates in cases where there is a wide variation in short-term interest rates. Similarly, SIDERMEX maintains that the Department should use company-specific interest rates in its short-term loan calculations, because national average rates do not accurately capture the benefit to the company.

*DOC Position.* For our purposes, we believe that the use of a national average interest rate as the commercial benchmark for short-term loans captures the benefit to the companies with sufficient accuracy. Even though we have found variations in short-term interest rates, our overall experience indicates that such variations are generally small. The relatively small increase in accuracy gained by measuring short-term loan benefits by using company-specific benchmarks is outweighed by the burdensome increase in administrative burden such a policy would involve.

*IV. Equity*

*Comment 14.* Petitioner, Bethlehem, and the Four argue that the Department should treat countervailable equity infusions as grants. The Four state that treating equity infusions as grants has several advantages over the Department's rate of return shortfall methodology, including administrative feasibility and less uncertainty in application. In addition, the Four insist that equity infusions into unequityworthy companies have grant-like qualities, because the government cannot expect realistically any return from its investment. Should dividends be paid to government, the Four state that the Department can subtract them from the amount countervailed. Bethlehem maintains that the Department's rate of return shortfall methodology wrongly focuses on the cost to the donor, rather than the benefit to the recipient.

*DOC Position.* We disagree that an equity infusion in an unequityworthy company has the characteristics of a grant. The essential difference between an equity purchase and the bestowal of a grant is the potential for return on equity. The domestic interested parties contend that the potential for any return on investment in these companies is mimimal, and therefore the Department should this difference in its treatment of equity infusions. Their argument focuses on the poor prospects for potential dividends at average rates, while ignoring the potential return in terms of retained earnings or increasing worth tof the company. Because we cannot discount this potential at the time the infusion is made, we should not treat equity infusions as an outright grant. To do so would raise the possibility of countervailing more than the net subsidy in cases where the government receives a return, in retained earnings or increasing worth from its investment.

When we say that a company is unequityworthy, we are *not* saying that a private investor could not expect any return or even to recoup his original investment. Rather, we are simply stating that a private investor would not have purchased equity because he could not expect a *reasonable* rate of return. The treatment of equity infusions as grants, however, implies that the government could expect no return, in terms of dividends, retained earnings, or through increased worth, from its investment. We lack the ability to look into the future that would be necessary to make such a judgement. Because of the difference betwen equity purchases and grants, the treatment of equity infusions as grants is inappropriate. We believe that our "rate of return shortfall methodology appropriately measures benefits from equity by an equity-based standard. Moreover, because it is based on the average rate of return a company would have to pay to attract investors, it accurately measures the benefit to the an unequityworthy company from government equity infusions.

*Comment 15.* Petitioner contends that the Department should subtract all domestic government subsidies received in prior years from the company's financial data before determining if government equity infusions constitute subsidies, if the company is uncreditworthy, and the magnitude of any subsidy from government equity infusions. To include domestic government subsidies in the financial data, petitioner states, would result in the elimination of certain non-equity benefits from the Department's calculations, and the violation of the Department's private investor standard for determining when government equity infusions are countervailable.

*DOC Position.* We have maintained consistently that subtracting out domestic government subsidies, contrary to petitioner's assertion, would result in the use of a standard different from that of a private investor to determine equityworthiness. When deciding to invest, a private actor will assess the financial position of the firm *at that point in time.* He will look upon any past investments, including his own, as sunk costs, irrelevant to his analysis of whether additional investment will earn a reasonable rate of return. Similarly, we assess the commercial soundness of additional government equity infusions by considering all prior investment and provision of subsidies as sunk costs and looking at the financial position of the company at the time the infusion is made. Petitioner's method would require us to look at the financial position of the company in a manner different from that of a private investor.

Nor do we believe that our method results in our not countervailing certain subsidies. Petitioner uses the example of a labor subsidy, which, by decreasing the compay's cost of production, will decrease the size of its loss. The result is that the company's rate of return shortfall on equity is lessened by the amount of the labor subsidy. Consequently,the equity subsidy also decreases by the amount of the labor subsidy, allegedly resulting, in effect, in the labor subsidy not being countervailed.

In this example, the petitioner is equating the secondary effect of the labor subsidy with the subsidy itself. The labor subsidy lowers the company's cost of production. By assessing countervailing duties against the labor subsidy, we neutralize the cost of production advantage. The labor subsidy also has a secondary effect on the company's financial position. We have consistently maintained that we do not look at the secondary effects of subsidies, because such analysis is highly speculative. By subtracting out domestic government subsidies from our creditworthy and equityworthy analyses, we in effect would be taking into account their secondary effect on company's financial position. We note that the Court of International Trade has endorsed our view that we do not look at the secondary effects of subsidies (see Michelin). We also note that, in another context, the domestic interested parties have argued against the consideration of the secondary effects of subsidies (see Comment 1 above).

*Comment 16.* Petitioner contends that if the Department decides to apply its rate of return shortfall method in valuing subsidies from equity infusions, it should compare the company's rate of return with the national average cost of debt in those cases where the national average cost of debt exceeds the national average rate of return on equity.

*DOC Position.* A company in which the government participates should not be expected to earn a rate of return greater than the national average rate. accordingly, it would be inappropriate to countervail against any amount greater that the national average rate of return on equity.

*Comment 17.* Bethlehem asserts that for companies whose existing stock is publicly traded, the Department should not always value the subsidy from equity infusions as the difference between what the government paid per share and the publicly-traded price. The price of its existing shares, Bethlehem reasons, may have no relation to the price the market would pay for new shares.

*DOC Position.* In calculating the subsidy from equity infusions, we strongly prefer to compare the government action with actual market behavior. The publicly traded price, we believe, is a much more accurate indicator of the company's future earnings potential and worth than any hypothetical measurement which we could devise. It is a much more reliable and accurate gauge as to whether, and if so, to what extent, government equity infusions are inconsistent with commercial considerations. Thus, the Department uses the publicly-traded share price to measure the value of government equity infusions where such information is available. Wherever possible, we use the public price immediately following the issuance of new shares to allow for the effect of the dilution in ownership on price.

*Comment 18.* Bethlehem argues that if a company is considered uncreditworthy, the Department should find that any equity infusions are necessarily inconsistent with commercial considerations.

*DOC Position.* Although many of the factors we consider in our equityworthiness and creditworthiness determinations are the same, the commercial considerations relevant to the granting of a loan will not be identical to those considered in a decision to make an equity investment. Therefore, while we recognize that we often will find uncreditworthy companies also to be unequityworthy, we do not believe that as a *per se* rule a determination of uncreditworthiness necessitates a determination of unequityworthiness.

[FR Doc. 84-11312 Filed 4-25-84; 8:45 am]
BILLING CODE 3510-DS-M

---

[A-351-012, A-351-014]

## Hot-Rolled Carbon Steel Plate and Hot-Rolled Carbon Steel Sheet; Allowance of Security in Lieu of Estimated Duty Pending Early Determinations of Antidumping Duty

**AGENCY:** International Trade Administration, Import Administration.

**ACTION:** Notice.

**SUMMARY:** The Department of Commerce has determined that it has sufficient information from Usinas Siderurgicas de Minas Gerais, Companhia Siderurgica Paulista, and Companhia Siderurgica Nacional to conduct an expedited review of the Antidumping Duty Order on hot-rolled carbon steel plate and hot-rolled carbon steel sheet from Brazil with respect to such merchandise manufactured by these firms. The Department will determine the appropriate foreign market values and United States prices by June 20, 1984. We will permit these companies to post bonds or other security in lieu of the cash deposit of estimated antidumping duties for hot-rolled carbon steel plate and hot-rolled carbon steel sheet entered, or withdrawn from warehouse, for consumption or or after the date of publication of this notice and on or before June 20, 1984.

**EFFECTIVE DATE:** April 26, 1984.

**FOR FURTHER INFORMATION CONTACT:** Mary S. Clapp, Office of Investigations, International Trade Administration, U.S. Department of Commerce, Washington, D.C. 20230, telephone: (202) 377-2438.

**SUPPLEMENTARY INFORMATION:**

### Background

On March 22, 1984, the Department of Commerce ("the Department") published in the Federal Register Antidumping Duty Orders on hot-rolled carbon steel plate and hot-rolled carbon steel sheet from Brazil (49 FR 10692). The Department announced that, in addition to deposits of estimated normal Customs duties, Customs officers were to require a cash deposit of estimated antidumping duties on all merchandise entered, or withdrawn from warehouse, for consumption on or after March 22, 1984.

On March 28, 1984, Usinas Siderurgicas de Minas Gerais (USIMINAS), Companhia siderurgica

Paulista (COSIPA) and Companhia Siderurgica Nacional (CSN) requested that the Department waive the requirement for cash deposit of estimated antidumping duties and conduct an expedited review pursuant to section 736(c) of the Tariff Act of 1930 (the Act).

Before granting a waiver of cash deposits of estimated antidumping duties we must be satisfied that we will be able to determine the appropriate foreign market value and United States prices of the subject merchandise which was entered, or withdrawn from warehouse, for consumption on or after the publication of the "Preliminary Determinations of Sales at Less Than Fair Value" (September 7, 1983) and before the publication of the ITC determinations of material injury (March 21, 1984) within 90 days after the date of publication of the order. The Department is satisfied that it will be able to do so.

Accordingly, the Department is instructing the Customs Service to waive the cash deposits of estimated antidumping duties and accept bonds or other security for hot-rolled carbon steel plate and hot-rolled carbon steel sheet manufactured by USIMINAS, COSIPA, and CSN entered, or withdrawn from warehouse, for consumption on or after the date of publication of this notice and on or before June 20, 1984.

Interested parties may submit written comments within 30 days from the date of publication of this notice and may request disclosure and or a hearing within 10 days after the date of publication. The Department will determine the results of this expedited review by June 20, 1984, including the results of its analysis of any such comments or hearing.

This notice is published in accordance with section 736(c)(2)(A) of the Act (19 U.S.C. 1673e(c)(2)).

Dated: April 18, 1984.

Alan F. Holmer,

*Deputy Assistant Secretary for Import Administration.*

[FR Doc. 84-11310 Filed 4-25-84; 8:45 am]

BILLING CODE 3510-DS-M

---

[A-351-025]

## Preliminary Determination of Sales at Not Less Than Fair Value; Cold-Rolled Carbon Steel Sheet From Brazil

**AGENCY:** International Trade Administration, Commerce.

**ACTION:** Notice.

**SUMMARY:** We preliminarily determine that cold-rolled carbon steel sheet from Brazil is not being, nor is it likely to be, sold in the United States at less than fair value. We have notified the United States International Trade Commission (ITC) of our determination.

If this investigation proceeds normally, we will make our final determination by July 2, 1984.

**EFFECTIVE DATE:** April 26, 1984.

**FOR FURTHER INFORMATION CONTACT:** Mary S. Clapp, Office of Investigations, Import Administration, International Trade Administration, U.S. Department of Commerce, 14th Street and Constitution Avenue, N.W., Washington, D.C. 20230; telephone: (202) 377-2438.

**SUPPLEMENTARY INFORMATION:**

### Preliminary Determination

We preliminarily determine that there is no responsible basis to believe or suspect that cold-rolled carbon steel sheet from Brazil is being sold, or is likely to be sold, in the United States at less than fair value, as provided in section 733 of the Tariff Act of 1930, as amended (19 U.S.C. 1673b) (the Act).

We found that the United States price of cold-rolled carbon steel sheet from Brazil exceeded the foreign market value on virtually all sales of this product. We found one sale from CSN on which the foreign market value exceeded the United States price. The weighted-average margin for CSN was 0.06 percent, which is *de minimis.*

If this investigation proceeds normally, we will make our final determination by July 2, 1984.

### *Case History*

On November 10, 1983, we received petitions from United States Steel Corporation on behalf of the domestic carbon steel product industry. In accordance with the filing requirements of § 353.36 of our regulations (19 CFR 353.36), the petitions alleged that imports of certain carbon steel products (hot-rolled carbon steel sheet and cold-rolled carbon steel sheet) from Brazil are being, or are likely to be, sold in the United States at less than fair value within the meaning of section 731 of the Act and that these imports are materially injuring, or threatening to materially injure, a United States industry.

After reviewing the petitions, we determined that they contained sufficient grounds to initiate antidumping investigations. We notified the ITC of our action and initiated the investigations on November 22, 1983 (48 FR 55011). On December 27, 1983, we were informed by the ITC that there is a reasonable indication that imports of certain carbon steel products are materially injuring a United States industry.

On March 13, 1984, the petitions were amended to include an allegation that "critical circumstances" exist with respect to sales of certain carbon steel products from Brazil pursuant to section 733(e) of the Act.

We presented questionnaires to Companhia Siderurgica Paulista (COSIPA), Companhia Siderurgica Nacional (CSN) and Usinas Siderurgicas de Minas Gerais S/A (USIMINAS) on December 2, 1983. We received responses on February 8, 16, and 22, 1984.

### *Scope of Investigation*

The merchandise covered by this investigation is cold-rolled carbon steel sheet.

The term *"cold-rolled carbon steel sheet"* covers the following cold-rolled carbon steel products. Cold-rolled carbon steel sheet is a flat-rolled carbon steel product, whether or not corrugated or crimped; whether or not painted or varnished and whether or not pickled; not cut, not pressed, and not stamped to non-rectangular shape; not coated or plated with metal; over 12 inches in width, and 0.1875 or more in thickness, as currently provided for in item 607.8320 of the Tariff Schedules of the United States Annotated *(TSUSA)*, or over 12 inches in width and under 0.1875 inch in thickness whether or not in coils, as currently provided for in items 607.8350, 607.8355, or 607.8360 of the *TSUSA*. Please note that the description of cold-rolled carbon steel sheet includes some products classified as "plate" in the *TSUSA*.

This investigation covers the period from June 1, 1983 to November 30, 1983. COSIPA, CSN and USIMINAS are the only known Brazilian producers who export the subject merchandise to the United States. We examined virtually all United States sales made during the period of investigation.

### *Fair Value Comparisons*

To determine whether sales of the subject merchandise in the United States were made at less than fair value, we compared the United States price with the foreign market value.

### *United States Price*

As provided in section 772(b) of the Act, we used the purchase price of the subject merchandise to represent the United States price because the merchandise was sold to unrelated purchasers prior to its importation into United States. We calculated the purchase price based on the F.O.B. or C

& F price to United States purchasers. We deducted brokerage charges, inland freight, handling charges, inland insurance, ocean freight and other expenses incurred in delivering the products to the port of exportation, where appropriate. We adjusted for taxes refunded or not collected because the products were being exported, where appropriate.

*Foreign Market Value*

In accordance with section 773(a)(1) of the Act, we used home market prices where there were sufficient home market sales at or above cost of production determine foreign market value. Where there were no or insufficient sales in the home market at prices at or above cost, we used constructed value. The petitioner alleged that sales in the home market were at prices below the cost of producing cold-rolled carbon steel sheet. We examined production costs, including materials, labor and general expenses. In calculating foreign market value, we made currency conversions from Brazilian cruzeiros to United States dollars in accordance with § 353.56(a)(1) of our regulations using the certified daily exchange rates.

We found that sales of certain subgroups of the subject merchandise were made at less than cost over an extended period of time, in substantial quantities and at prices not permitting the recovery of all costs within a reasonable period of time in the normal course of trade. Where there were insufficient sales above cost and we could not use sales in the home market to determine the foreign market value of the products under investigation which are in these subgroups, we used constructed value. Sufficient sales of other subgroups of the products under investigation were made in the home market at or above cost. Therefore, we used home market prices to determine the foreign market value for these subgroups.

The home market prices were based on ex-factory price to unrelated home market purchasers. From these prices we deducted discounts, where appropriate. We adjusted, where appropriate, for the differences between commissions on sales to the United States and indirect selling expenses in the home market used as an offset to U.S. commissions in accordance with 19 CFR 353.15(c). We also made a circumstance of sale adjustment for differences in credit terms in the two markets.

No claims were made for adjustments for differences in physical characteristics. Packing was not included in the price to either market.

In accordance with section 773 of the Act, we calculated constructed value, where appropriate, by adding the costs of materials and of fabrication, general expenses, and profit. For materials and fabrication, we used the appropriate producer's actual cost figures.

We used the actual general expenses since they exceeded the statutory minimum of 10 percent of the sum of material and fabrication costs. We calculated profit using the statutory minimum of eight percent of the sum of the general expenses and cost since the actual profit was less than the statutory minimum. We did not add packing costs since the merchandise sold to the United States was sold unpacked.

*Verification*

As provided in section 776(a) of the Act, we will verify all data used in reaching the final determination.

*Critical Circumstances*

Since our preliminary determination of sales at less than fair value is negative, the issue of critical circumstances is moot.

ITC Notification

In accordance with section 733(f) of the Act, we will notify the ITC of our determination.

Public Comment

In accordance with section 353.47 of the our regulations, if requested, we will hold a public hearing to afford interested parties an opportunity to comment on this preliminary determination at 10:00 a.m. on May 31, 1984 at the United States Department of Commerce, conference room 3708, 14th Street and Constitution Avenue, N.W., Washington, D.C. 20230. Individuals who wish to participate in the hearing must submit a request to the Deputy Assistant Secretary for Import Administration, Room 3099B, at the above address within 10 days of this notice's publication. Requests should contain: (1) The party's name, address, and telephone number; (2) the number of participants; (3) the reason for attending; and (4) a list of the issues to be discussed. In addition, prehearing briefs in at least 10 copies must be submitted to the Deputy Assistant Secretary by May 29, 1984. Oral presentations will be limited to issues raised in the briefs. All written views should be filed in accordance with 19 CFR 353.46, within 30 days of this notice's publication, at the above address and in at least 10 copies.

Dated: April 18, 1984.

Alan F. Holmer,

*Deputy Assistant Secretary for Import Administration.*

[FR Doc. 84-11311 Filed 4-25-84; 8:45 am]

BILLING CODE 3510-DS-M

## National Oceanic and Atmospheric Administration

## New England Fishery Management Council; Amended Meeting

**AGENCY:** National Marine Fisheries Service, NOAA, Commerce.

**ACTION:** Notice.

**SUMMARY:** A notice of public meetings for the New England and Mid-Atlantic Fishery Management Councils to be held in Newport, RI, on May 10-11, 1984, was published at 49 FR 15118, on April 17, 1984. A portion of that notice is amended to extend the New England Fishery Management Council's meeting another day, so that it begins on May 9, 1984, at 10 a.m., and adjourns on May 10, 1984, at approximately noon. All other information remains unchanged. For further information, contact Douglas G. Marshall, Executive Director, New England Fishery Management Council, Suntaug Office Park, 5 Broadway, Saugus, MA 01906; telephone: (617)-231-0422.

Dated: April 23, 1984.

Roland Finch,

*Director, Office of Fisheries Management, National Marine Fisheries Service.*

[FR Doc. 84-11315 Filed 4-25-84; 8:45 am]

BILLING CODE 3510-22-M

## Federal Consistency Appeal by Exxon Company, U.S.A. From California Coastal Commission Objection

**AGENCY:** National Oceanic and Atmospheric Administration, Commerce.

**ACTION:** Notice of extension of public comment period.

**SUMMARY:** The deadline for submission of public comments is extended to May 9, 1984, in the appeal filed by Exxon Company, U.S.A. (Exxon) with the Secretary of Commerce (Secretary) from an objection by the California Coastal Commission (Commission) that Exxon's proposed drilling of an exploratory well at well location B in the Southwest Quarter of Lease OCS-P 0467 in the Santa Rosa Unit in the Santa Barbara Channel, as provided in Exxon's Plan of Exploration, as amended, filed with the U.S. Department of Interior, is inconsistent with the California Coastal

Management Program. This appeal was filed pursuant to Section 307(c)(3) (A) and (B) of the Coastal Zone Management Act of 1972, as amended (CZMA), 16 U.S.C. 1456(c)(3) (A) and (B), and implementing regulations at 15 CFR Part 930 Subpart H. For additional information on Exxon's apeal, see Notice of Appeal, 49 FR 11699, March 27, 1984.

**SUPPLEMENTARY INFORMATION:** Interested persons are advised that they may submit comments to the Secretary on the issues raised in this appeal. Comments should be sent to: Robert J. McManus, General Counsel, National Oceanic and Atmospheric Administration, Department of Commerce, 14th and Constitution Avenue, NW., Room 5814, Washington, D.C. 20230.

Copies of comments also should be sent to the following persons:

1. James C. Dale, Exxon Company, U.S.A., P.O. Box 4279, Houston, Texas 77210–4279;
2. Tim Eichenberg, California Coastal Commission, 631 Howard St., San Francisco, CA 94105; and
3. William Grant, Minerals Management Service, Pacific OCS Region, 1340 W. 6th Street, Los Angeles, CA 90017.

Comments should address whether Exxon's proposed exploraory drilling complies with the regulatory criteria, as set forth in 15 CFR 930.121 and 930.122, to be considered by the Secretary in deciding whether the drilling may be Federally approved under Section 307(c)(3) (A) and (B) of the CZMA notwithstanding the objection of the California Coastal Commission.

Exxon's exploratory drilling may be Federally approved notwithstanding the objection of the Commission that the drilling is inconsistent with the California Coastal Management Program if the activity meets one of two tests. To meet the first test, four criteria must be satisfied: (a) The activity furthers one or more of the competing national objectives or purposes contained in Sections 302 and 303 of the CZMA; (b) when performed separately or when its cumulative effects are considered, the activity will not cause adverse effects on the natural resources of the coastal zone substantial enought to outweigh its contribution to the national interest; (c) the activity will not violate any requirements of the Clean Air Act, as amended, or the Clean Water Act, as amended; and (d) there is no reasonable alternative available which would permit the activity to be conducted in a manner consistent with the state managment program. To meet the second test, the Secretary must find that a national defense or other national security interest would be significantly impaired if the activity were not permitted to go forward as proposed. If the Secretary does not find that the activity meets either of these two tests, the Federal agency shall not approve the activity.

Access to Exxon's Notice of Appeal and accompanying public information, and to the public information contained in comments submitted by Federal and State agencies, will be available to the public at the following State and Federal offices during normal working hours:

1. California Coastal Commission, 631 Howard Street, 4th Floor, San Francisco, California 94105;
2. Office of the Assistant General Counsel for Ocean Services, National Oceanic and Atmospheric Administration, Department of Commerce, Room 270, 2001 Wisconsin Avenue, NW., Washington, D.C. 20235; and
3. Minerals Management Service, Pacific OCS Region, Public Information Room, 1340 W. 6th St., Los Angeles, California 90017.

A copy of Exxon's notice of appeal and supporting information is also available at the Santa Barbara Public Library, 40 E. Anapamu, Santa Barbara, California 93101.

**FOR FURTHER INFORMATION CONTACT:** Bernard C. Cody, Attorney Advisor, National Oceanic and Atmospheric Administration, 2001 Wisconsin Avenue, NW., #270, Washington, D.C. 20235, 202–254–7512.

(Federal Domestic Assistance Catalog No. 11.419 Coastal Zone Management Program Administration)

Dated: April 19, 1984.

Robert J. McManus,

*General Counsel, National Oceanic and Atmospheric Administration.*

[FR Doc. 84–11220 Filed 4–25–84; 8:45 am]

BILLING CODE 3510–08–M

## COMMITTEE FOR THE IMPLEMENTATION OF TEXTILE AGREEMENTS

### Amending the Export Visa Requirement for Certain Cotton and Man-Made Fiber Apparel Products From Taiwan

April 23, 1984.

The Chairman of the Committee for the Implementation of Textile Agreements (CITA), under the authority contained in E.O. 11651 of March 3, 1972, as amended, has issued the directive published below to the Commissioner of Customs to be effective on May 1, 1984. For further information contact William Boyd, International Trade Specialist (202) 377–4212.

### Background

The export visa requirement established under the agreement concerning cotton, wool and man-made fiber textile products from Taiwan, (See 37 F.R. 20745) calls for the inclusion on each visa of the correct category and quantity of the merchandise. The purpose of this notice is to advise the public that, effective on May 1, 1984, in order to meet the "correct category" requirement, visas for cotton and man-made fiber apparel products in Categories 359, 369, 631 and 669 must include the following designations for merchandise exported on and after May 1, 1984.

| Category | TSUSA No. | Designation on visa | Description |
|---|---|---|---|
| 359 | Only 702.0600 and 702.1200 | 359-H | Headwear. |
| 359 | All TSUSA numbers in the category except those listed above | 359-O | Other than headwear. |
| 369 | Only 706.3200, 706.3650, and 706.4111 | 369-L | Luggage. |
| 369 | All TSUSA numbers in the category except those listed above | 369-O | Other than luggage. |
| 631 | Only 704.3215, 704.8525 and 704.9000 | 631-W | Work gloves. |
| 631 | All TSUSA numbers in the category except those listed above | 631-O | Other than work gloves. |
| 669 | Only 385.5300 | 669-P | Polypropylene bag. |
| 669 | Only 355.4520 and 355.4530 | 669-F | Fishnets. |
| 669 | Only 386.1105 and 389.6210 | 669-T | Tents. |
| 669 | All TSUSA numbers in the category except those listed above | 669-O | Other than P-P bags, fishnets and tents. |

A description of the textile categories in terms of T.S.U.S.A. numbers was published in the Federal Register on December 13, 1982 (47 FR 55709), as amended on April 7, 1983 (48 FR 15175), May 3, 1983 (48 FR 19924) and December 14, 1983 (48 FR 55607), December 30, 1983 (48 FR 57584), and April 4, 1984 (49 FR 13397).

Walter C. Lenahan,

*Chairman, Committee for the Implementation of Textile Agreements.*

April 23, 1984.

Committee for the Implementation of Textile Agreements

Commissioner of Customs,

*Department of the Treasury, Washington, D.C.*

Dear Mr. Commissioner: This directive further amends, but does not cancel, the directive of September 27, 1972 from the Chairman, Committee for the Implementation of Textile Agreements, which directed you to prohibit entry into the United States for consumption, or withdrawal from warehouse for consumption of certain cotton, wool and man-made fiber textile products produced or manufactured in Taiwan for which the authorities in Taiwan had not issued an appropriate export visa.

Effective on May 1, 1984, the directive of September 27, 1972 is hereby further amended to require that export visas for cotton and man-made fiber textile products in Categories 359, 369, 631, and 669, produced or manufactured in Taiwan, shall be visaed as follows for merchandise exported on and after that date, in order to meet the "correct category" requirement:

| Category | TSUSA No. | Designation on visa | Description |
|---|---|---|---|
| 359 | Only 702.0600 and 702.1200 | 359-H | Headwear. |
| 359 | All TSUSA numbers in the category except those listed above | 359-O | Other than headwear. |
| 369 | Only 706.3200, 706.3650, and 706.4111 | 369-L | Luggage. |
| 369 | All TSUSA numbers in the category except those listed above | 369-O | Other than luggage. |
| 631 | Only 704.3215, 704.8525 and 704.9000 | 631-W | Work gloves. |
| 631 | All TSUSA numbers in the category except those listed above | 631-O | Other than work gloves. |
| 669 | Only 385.5300 | 669-P | Polypropylene bag. |
| 669 | Only 355.4520 and 355.4530 | 669-F | Fishnets. |
| 669 | Only 386.1105 and 389.6210 | 669-T | Tents. |
| 669 | All TSUSA numbers in the category except those listed above | 669-O | Other than polypropylene bags, fishnets and tents. |

A description of the textile categories in terms of T.S.U.S.A. numbers was published in the Federal Register on December 13, 1982 (47 FR 55709), as amended on April 7, 1983 (48 FR 15175), May 3, 1983 (48 FR 19924) and December 14, 1983 (48 FR 55607), December 30, 1983 (48 FR 57584), and April 4, 1984 (49 FR 13397).

The action taken with respect to the authorities in Taiwan and with respect to imports of cotton and man-made fiber textile products from Taiwan have been determined by the Committee for the Implementation of Textile Agreements to involve foreign affairs functions of the United States. Therefore, these directions to the Commissioner of Customs, which are necessary for the implementation of such actions, fall within the foreign affairs exception to the rule-making provisions of 5 U.S.C. 553. This letter will be published in the Federal Register.

Sincerely,

Walter C. Lenahan,

*Chairman, Committee for the Implementation of Textile Agreements.*

[FR Doc. 84-11314 Filed 4-25-84; 8:45 am]

BILLING CODE 3510-DR-M

## Soliciting Public Comment on Bilateral Textile Consultations With Peru on Category 317pt (Only Cotton Twill)

April 23, 1984.

On April 10, 1984, the United States Government, under Article 3 of the Arrangement Regarding International Trade in Textiles, requested the Government of Peru to enter into consultations concerning exports to the United States of cotton twill in Category 317 (T.S.U.S.A. numbers 320.—58 through 331.—58 and 320.—64 through 331.—64), produced or manufactured in Peru.

The purpose of this notice is to advise that, if no solution is agreed upon with the Government of Peru during the sixty-day consultation period, which began on April 10, 1984, the Committee for the Implementation of Textile Agreements may later establish a limit for the entry and withdrawal from warehouse for consumption of cotton textile products in Category 317pt, produced or manufactured in Peru and exported to the United States during the twelve-month period which began on April 10, 1984 and extends through April 9, 1985 at a level of 8,173,427 square yards.

A summary market statement follows this notice.

A description of the textile categories in terms of T.S.U.S.A. numbers was published in the Federal Register on December 13, 1982 (47 FR 55709), as amended on April 7, 1983 (48 FR 15175), May 3, 1983 (48 FR 19924) and December 14, 1983 (48 FR 55607), and December 30, 1983 (48 FR 57584).

Anyone wishing to comment or provide data or information regarding the treatment of Category 317pt., is invited to submit such comments or information in ten copies to Mr. Walter C. Lenahan, Chairman, Committee for the Implementation of Textile Agreements, International Trade Administration, U.S. Department of Commerce, Washington, D.C. 20230. Because the exact timing of the consultations is not yet certain, comments should be submitted promptly. Comments or information submitted in response to this notice will be available for public inspection in the Office of Textiles and Apparel, Room 3100, U.S. Department of Commerce, 14th and Constitution Avenue, N.W., Washington, D.C., and may be obtained upon written request.

Further comment may be invited regarding particular comments or information received from the public which the Committee for the Implementation of Textile Agreements considers appropriate for further consideration.

The solicitation of comments regarding any aspect of the agreement or the implementation thereof is not a waiver in any respect of the exemption contained in 5 U.S.C. 553(a)(1) relating to matters which constitute "a foreign affairs function of the United States."

Walter C. Lenahan,

*Chairman, Committee for the Implementation of Textile Agreements.*

Peru—Market Statement

*Category 317pt.—Cotton Twills*

March 1984.

Twills from Peru during the year ending January 1984 were 8.2 million square yards compared with 1.7 million square yards a year earlier. Imports in January 1984 were 1.1 million square yards or 13.4 percent of the total imports for the year ending January 1984.

These imports from Peru are entered at duty-paid landed values which are below the U.S. producer prices for comparable fabrics. These and other factors lead the United States Government to conclude that imports from Peru are causing market disruption in the United States.

U.S. production of cotton twills declined by 9.3 percent from 137 million square yards in 1982 to 127 million in 1983. Imports increased by 53 percent from 51 million square yards in 1982 to 78 million in 1983. Imports for the year ending January 1984 were 79 million square yards. Imports were equivalent to 37.5 percent of domestic production in 1982 and 61.9 percent in 1983.

[FR Doc. 84-11313 Filed 4-25-84; 8:45 am]

BILLING CODE 3510-DR-M

## DEPARTMENT OF DEFENSE

### Office of the Secretary

### Defense Intelligence Agency Advisory Committee; Closed Meeting

Pursuant to the provisions of Subsection (d) of Section 10 of Pub. L. 92-463, as amended by Section 5 of Pub. L. 94-409, notice is hereby given that a closed meeting of a Panel of the DIA Advisory Committee has been rescheduled from May 9 and 23, 1984 as follows:

Monday and Tuesday, May 21-22, 1984 Plaza West, Rosslyn, VA. The entire meeting, commencing at 0900 hours is devoted to the discussion of classified information as defined in Section 552b(c)(1), Title 5 of the United States Code and therefore will be closed to the public. Subject matter will be used in a special study on Special Actions.

M. S. Healy,

*OSD Federal Register Liaison Officer, Department of Defense.*

[FR Doc. 84-11235 Filed 4-25-84; 8:45 am]

BILLING CODE 3810-01-M

### Process for Section 6 Schools Operated by the Department of Defense

Notice is hereby given that except as provided below all section 6 Schools, operated by the Department of Defense, will continue to operate in accordance with those Department of Education regulations which define "per pupil cost" under 20 U.S.C. section 241(e).

The Department of Defense will continue to require yearly proposals for operating section 6 Schools, and for making arrangements for the education of military dependents, utilizing the definition of per pupil cost set out in 34 CFR 222.50(d). The form of the proposal submission will be prescribed in separate correspondence by the Department of Defense.

Further guidance will be issued by the Department of Defense concerning budget and finance, military construction, procurement and other matters related to the establishment, maintenance and operation of the section 6 Schools.

Dated: April 23, 1984.

M. S. Healy,

*OSD Federal Register Liaison Officer, Washington Headquarters Services, Department of Defense.*

[FR Doc. 84-11282 Filed 4-25-84; 8:45 am]

BILLING CODE 3810-01-M

## Department of the Army

### Intent To Prepare a Draft Supplement to the Federal Highway Administration's Environmental Impact Statement (DSEIS) for the Proposed I-664 Bridge-Tunnel Complex Crossing Hampton Roads Between Newport News and Suffolk, Virginia

**AGENCY:** Army Corps of Engineers, DOD.

**ACTION:** Notice of intent to prepare a draft supplement environmental impact statement.

**SUMMARY:** 1. *Proposed Action:* The Virginia Department of Highways and Transportation proposes to construct a Bridge Tunnel Complex across Hampton Road between Newport New Point and the South Shore at the Frederick Campus, Tidewater Community College, Virginia. The highway department proposes to obtain 2.5 million cubic yards of backfill material for two tunnel island complexes and for the tunnel trench from the Horseshoe Shoal area located in the lower Chesapeake Bay adjacent to Hampton Roads, Virginia. The project will impact two Federal Project Channels and is in area of productive shellfish beds. The purpose of the project is to improve the interstate transportation system in the Hampton Roads area. The Federal Highway Administration prepared and circulated an Environmental Impact Statement on 24 January 1974. The purpose of the supplement EIS is to update the existing document and to comply with existing regulations that were not in effect when the original document was prepared.

2. *Alternatives:* Alternatives which will be investigated include but will not be limited to other locations for the borrow site and no project.

3. *Scoping Process:* The Council on Environmental Quality Regulations for implementing the Procedural Provisions of the National Environmental Policy Act do not require scoping for supplemental EIS's. However, the project has been closely coordinated with State and Federal agencies on numerous occasions. Significant issues which have already been identified include the impact to shellfish beds and to the Newport News Creek and Newport News Channel Federal project channels.

4. *Public Meetings:* No public scoping meeting will be held.

5. *Draft Supplement EIS Availability:* It is estimated that the Draft Supplement will be available to the public for review and comments in late summer 1984.

**ADDRESS:** Questions about the proposed action and Draft Supplement can be answered by: Julie Samuel, U.S. Army Engineer District, Norfolk, 803 Front Street, Norfolk, Virginia 23510, (804) 441-3792-Com, 827-3792-FTS.

Dated: April 17, 1984.

Ronald E. Hudson,

*Colonel, Corps of Engineers, District Engineer.*

[FR Doc. 84-11200 Filed 4-25-84; 8:45 am]

BILLING CODE 3710-EN-M

## Corps of Engineers, Department of the Army

### Intent To Prepare a Draft Environmental Impact Statement (DEIS); Proposed Great Lakes Connecting Channels and Harbors Project; Final Report

**AGENCY:** Army Corps of Engineers, DOD.

**ACTION:** Notice of Intent to Prepare a Draft Environmental Impact Statement (DEIS).

**SUMMARY:**

1. Proposed Actions

Preliminary feasibility analysis of 18 different plans reviewed as part of the Great Lakes Connecting Channels and Harbors Study resulted in the elimination of plans that lacked economic feasibility. The plan which would provide the greatest net economic benefits includes a combination of improved traffic monitoring and construction of a new large lock designed for the safe and efficient handling of vessels up to 1,014 feet long and 105 feet wide in the St. Marys River at Sault Ste. Marie, Michigan. This plan has been analyzed in the Great Lakes Connecting Channels and Harbors Draft Interim Feasibility Report and DEIS due to be released in June, 1984.

The Great Lakes Connecting Channels and Harbors Draft Final Feasibility Report and DEIS will analyze three actions which could be implemented in addition to, or independently of, the new lock or each other. These actions are:

a. Deepening portions of the St. Marys River and two Lake Superior harbors. This action would provide a one foot

increase in the maximum low water vessel draft to 26½ feet in the upper St. Marys River, and portions of Duluth-Superior Harbor, Minnesota-Wisconsin, and Two Harbors, Minnesota. Additional draft in these areas would allow many vessels making transits between Lake Superior and Lakes Huron, Michigan, and Erie to take advantage or high water periods on the lower lakes.

b. Widening portions of the Lake Erie port of Ashtabula Harbor, Ohio, to permit increased service by Class 10 (1000 feet x 105 feet) vessels.

c. Deepening portions of the existing Federal project at the Lake Michigan port of Indiana Harbor, Indiana, to permit a maximum low water draft of 28½ feet by Class 10 vessels in transits from the naturally deep water private harbor at Escanaba, Michigan.

2. Alternatives

The only reasonable alternative to the actions described above is continued operation of the existing system. Under this plan, the current constraints on shipping would continue.

Other plans which were considered but did not warrant detailed evaluation will be discussed briefly in the DEIS. Alternative disposal sites for dredged materials generated from the proposed plans will also be examined.

3. Scoping Process

a. Public workshops were held in Cleveland, Ohio; Duluth, Minnesota; and Sault Ste. Marie, Michigan, during August of 1982 to inform the public of the status of the project and to encourage public participation in the study. Coordination with Federal, State and local officials is being maintained through a series of meetings and mailings.

b. Significant issues to be addressed in the DEIS include the potential impacts of dredging and the disposal of dredged material in those areas where deepening or widening of navigation channels is required by the proposed plans, and the potential impacts of operating vessels at greater drafts throughout the system during periods of high water.

c. Other Environmental Review and Consultation Requirements—This project will be reviewed for compliance with the following:

Fish and Wildlife Act of 1956;
Fish and Wildlife Coordination Act of 1958;
National Historic Preservation Act of 1968;
National Environmental Policy Act of 1969;
Endangered Species Act of 1973;
Water Resources Development Act of 1976;
Excutive Order 11990, Wetlands Protection, May 1977;
Executive Order 11988, Floodplain Management, May 1977;
Clean Air Act of 1977;
Clean Water Act of 1977;
Corps of Engineers, Department of the Army, 33 CFR Part 230, Environmental Quality;
Corps of Engineers, Department of the Army, Policy and Procedure for Inplementing NEPA (ER 200-2-2).

4. Estimated Date of DEIS Release

It is anticipated that the DEIS will be available to the public in February, 1985.

**ADDRESS:** Questions about the proposed action and DEIS can be answered by Mr. Jim Galloway, Environmental Analysis Branch, U.S. Army Corps of Engineers, Box 1027, Detroit, Michigan 48231.

Dated: April 19, 1984.

Raymond T. Beurket, Jr.,

*Colonel, Corps of Engineers, Commanding.*

[FR Doc. 84-11260 Filed 4-25-84; 8:45 am]

BILLING CODE 3710-GA-M

## DEPARTMENT OF EDUCATION

### Advisory Council on Dependents' Education; Meeting

**AGENCY:** Advisory Council on Dependents' Education, Ed.

**ACTION:** Notice of open meeting.

**SUMMARY:** This notice sets forth the schedule and proposed agenda of a forthcoming meeting of the Advisory Council on Dependents' Education and of two standing committees concerning education programs and administration. This notice also describes the functions of the council. Notice of these meetings is required under Section 10(a)(2) of the Federal Advisory Committee Act. This document is intended to notify the general public of its opportunity to attend.

**DATE:** The Advisory Council on Dependents' Education: May 14 and 16, 1984, from 9:00 a.m. to 5:00 p.m.

Committees: May 15, 9:00 a.m. to 5:00 p.m.

**ADDRESS:** DODDS-Germany Headquarters, Lindsay Air Station, Building B-05, Wiesbaden, W. Germany.

**FOR FURTHER INFORMATION CONTACT:** Dr. William F. Keough, Administrator of Education for Overseas Dependents, 400 Maryland Avenue, SW., Washington, D.C. 20202, (202) 245-8011.

**SUPPLEMENTARY INFORMATION:** The Advisory Council on Dependents' Education is established under section 1411 of the Defense Dependents' Education Act of 1978, as amended (20 U.S.C. 929). The Council is established to recommend to the Director general policies for operation of the defense dependents' education system with respect to cirriculum selection, administration, and operation of the system.

The meeting of the Council is open to the public. The proposed agenda for the full Council on May 14 and 16 includes: A report of the Administrator on Council matters, a progress report by the Director, a response by the Director to ACDE recommendations and requests of February 1984, and either written reports and/or presentations by DoDDs-Germany staff members on DoDDs activities in response to the National Commission on Excellence in Education report, substitute teachers, standardized tests, the Delta 2300 computer, and differentiated staffing and the pilot master teacher program in Panama. The DoDDS Germany staff will also report on programs in that region. The proposed agenda for the full Council on May 16 includes reports by the committees.

The proposed agenda for the Education Program Committee on May 15 includes consideration of the Director's responses to the February ACDE recommendations, standardized tests, kindergarten entrance age, and preschool initiatives.

The proposed agenda for the Administration Committee for May 18 includes consideration of the Director's responses to the February ACDE recommendations, substitute teachers, tuition assistance, the Delta 2300 computer, certification, the master teacher pilot program, sizing of small schools, and concerns of local school advisory committees.

Records are kept of all Council proceedings and are available for inspection at the office of the Advisory Council on Dependents' Education, Room 3047, 400 Maryland Avenue, SW., Washington, D.C. from the hours of 8:30 to 5:30 p.m.

Dated: April 23, 1984.

A. Wayne Roberts,

*Deputy Under Secretary for Intergovernmental and Interagency Affairs.*

[FR Doc. 84-11266 Filed 4-25-84; 8:45 am]

BILLING CODE 4000-01-M

## DEPARTMENT OF ENERGY

### Federal Energy Regulatory Commission

[Project No. 3485-001]

### The City of Ellensburg and the Public Utility District No. 1 of Kittitas County, Washington; Surrender of Preliminary Permit

April 23, 1984.

Take notice that the City of Ellensburg and the Public Utility District No. 1 of Kittitas County, Washington, Permittees for the Cle-Elum Hydroelectric Project No. 3485 has requested that their preliminary permit be terminated. The Preliminary Permit was issued on June 12, 1981, and would have expired on May 31, 1984. The project would have been located on the Cle Elum River in Kittitas County, Washington.

The City of Ellensburg and the Public Utility District No. 1 of Kittitas County, Washington filed the request on March 9, 1984, and the surrender of the preliminary permit for Project No. 3485 is deemed accepted as of March 9, 1984 and effective as of 30 days after the date of this notice.

Kenneth Plumb,

*Secretary.*

[FR Doc. 84-11177 Filed 4-25-84; 8:45 am]

BILLING CODE 6717-01-M

[Project No. 3487-001]

### The City of Ellensburg and the Public Utility District No. 1 of Kittitas County, Washington; Surrender of Preliminary Permit

April 23, 1984.

Take notice that the City of Ellensburg and the Public Utility District No. 1 of Kittitas County, Washington, Permittees for the Kachess Hydroelectric Project No. 3487, have requested that their preliminary permit be terminated. The Preliminary Permit was issued on June 12, 1981 and would have expired on May 31, 1984. The project would have been located on the Kachess River in Kittitas County, Washington.

The City of Ellensburg, Washington and the Public Utility District No. 1 of Kittitas County, Washington filed the request on March 9, 1984, and the surrender of the preliminary permit for Project No. 3487 is deemed accepted as of March 9, 1984 and effective as of 30 days after the date of this notice.

Kenneth F. Plumb,

*Secretary.*

[FR Doc. 84-11178 Filed 4-25-84; 8:45 am]

BILLING CODE 6717-01-M

[Project No. 3488-001]

### The City of Ellensburg and the Public Utility District No. 1 of Kittitas County, Washington; Surrender of Preliminary Permit

April 23, 1984.

Take notice that the City of Ellensburg and the Public Utility District No. 1 of Kittitas County, Washington, Permittees for the Keechelus Hydroelectric Project No. 3488 has requested that their preliminary permit be terminated. The Preliminary Permit was issued on June 21, 1981, and would have expired on May 31, 1984. The project would have been located on the Yakima River in Kittitas County, Washington.

The city of Ellensburg and the Public Utility District No. 1 of Kittitas County, Washington filed the request on March 9, 1984, and the surrender of the preliminary permit for Project No. 3488 is deemed accepted as of March 9, 1984 and effective as of 30 days after the date of this notice.

Kenneth F. Plumb,

*Secretary.*

[FR Doc. 84-11179 Filed 4-25-84; 8:45 am]

BILLING CODE 6717-01-M

[Docket No. ER84-385-000]

### Middle South Services, Inc.; Notice of Filing

April 23, 1984.

The filing Company submits the following:

Take notice that on April 13, 1984, Middle South Services, Inc. (Middle South) tendered for filing a letter of notification from Arkansas Power & Light Company by Middle South, Agent, to the Empire District Electric Company regarding a reduction in the Diversity Base Amount available to the Empire District Electric Company.

Middle South requests that the advance notice requirement be waived to allow the reduced Diversity Base Amount to be placed in effect at the end of the Exchange Year that ended in November, 1983.

Any person desiring to be heard or to protest said filing should file a motion to intervene or protest with the Federal Energy Regulatory Commission, 825 North Capitol Street, N.E., Washington, D.C. 20426, in accordance with Rules 211 and 214 of the Commission's Rules of Practice and Procedure (18 CFR 385.211, 385.214). All such motions or protests should be filed on or before May 8, 1984. Protests will be considered by the Commission in determining the appropriate action to be taken, but will not serve to make protestants parties to the proceeding. Any person wishing to become a party must file a motion to intervene. Copies of this filing are on file with the Commission and are available for public inspection.

Kenneth F. Plumb,

*Secretary.*

[FR Doc. 84-11180 Filed 4-25-84; 8:45 am]

BILLING CODE 6717-01-M

[Docket No. ER84-386-000]

### Middle South Services, Inc.; Notice of Filing

April 23, 1984.

The filing Company submits the following:

Take notice that on April 13, 1984, Middle South Services, Inc. (Middle South) tendered for filing a letter of notification from Arkansas Power & Light Company by Middle South, Agent to Southwestern Electric Power Company regarding a reduction in the Diversity Base Amount available to the Southwestern Electric Power Company.

Middle South requests that the advance notice requirement be waived to allow the reduced Diversity Base to be placed in effect at the end of the Exchange Year that ended in November 1983.

Any person desiring to be heard or to protest said filing should file a motion to intervene or protest with the Federal Energy Regulatory Commission, 825 North Capitol Street, N.W., Washington, D.C. 20426, in accordance with Rules 211 and 214 of the Commission's Rules of Practice and Procedure (18 CFR 385.211, 385.214). All such motions or protests should be filed on or before May 8, 1984. Protests will be considered by the Commission in determining the appropriate action to be taken, but will not serve to make protestants parties to the proceeding. Any person wishing to become a party must file a motion to intervene. Copies of this filing are on file with the Commission and are available for public inspection.

Kenneth F. Plumb,

*Secretary.*

[FR Doc. 84-11181 Filed 4-25-84; 8:45 am]

BILLING CODE 6717-01-M

[Docket No. CP84-294-001]

### Northwest Pipeline Corp.; Amendment to Application

April 20, 1984.

Take notice that on April 17, 1984, Northwest Pipeline Corporation (Applicant), P.O. Box 1526, Salt Lake City, Utah 84110, filed in Docket No.

CP84-294-001 an amendment to its pending application filed pursuant to Section 7(c) of the Natural Gas Act in Docket No. CP84-294-000 so as to include additional distribution company customers for the sale and delivery of incentive-priced Canadian natural gas, all as more fully set forth in the amendment which is on file with the Commission and open to public inspection.

Applicant states that in its application in Docket No. CP84-294-000 it requested authority to implement the sale and delivery of incentive-priced Canadian natural gas to Northwest Natural Gas Company, CP National Corporation and Southwest Gas Corporation (Buyers), for resale to designated large commercial and industrial customers, pursuant to Agreements between Applicant and Buyers dated March 6, 1984 (Sales Agreements). It is further stated four additional distribution company customers of Applicant have been able to finalize arrangements with their eligible end-users and have requested to participate in the program. According to Applicant, Intermountain Gas Company, Cascade Natural Gas Corporation, The Washington Water Power Company, and Washington Natural Gas Company (Additional Buyers) have entered into agreements with Applicant, dated March 26, 1984, March 23, 1984, April 12, 1984, and March 26, 1984, respectively, (Additional Sales Agreements). These Additional Sales Agreements are said to have terms and conditions equivalent to the Sales Agreements between Applicant and Buyers.

Applicant amends its application so as to request authorization for the sale and delivery of incentive-priced Canadian natural gas, to be made available to Applicant under an amending agreement with Westcoast Transmission Company, Ltd. (Westcoast), dated February 28, 1984, to both Buyers and Additional Buyers, pursuant to the Sales Agreements and Additional Sales Agreements, for resale to designated large commercial and industrial end-users to serve requirements in excess of a defined base monthly quantity for each such end-user. It is further indicated that the proposed service would be effectuated in the manner described in Applicant's application filed on March 12, 1984.

Applicant estimates that approximately 80,000 Mcf per day would be sold to Buyers and Additional Buyers pursuant to the Sales Agreements and Additional Sales Agreements and that approximately 17,300,000 Mcf would be sold under such agreements during the April through October 1984 period. Of the estimated 17,300,000 Mcf of total sales, it is stated, approximately 6,500,000 Mcf represent the retention of market which would otherwise be lost to alternative fuels and the remaining 10,800,000 Mcf represent the regaining of markets which have recently switched to alternative fuels.

It is indicated that no change in the rate structure or disposition of the revenues set forth in the March 12, 1984, application is proposed. Applicant asserts that for volumes of natural sold by Applicant to Buyers and Additional Buyers under the Sales Agreements and Additional Sales Agreements, Buyers and Additional Buyers would pay a two-part rate consisting of an amount equal to the price paid by Applicant for the subject gas under the Westcoast Agreement, currently $3.40 per million Btu, plus a handling charge of $0.19 per million Btu. The handling charge is said to be inclusive of fuel gas requirements and any applicable G.R.I. charge.

Applicant proposes to retain that portion of the revenues attributable to the handling charge, exclusive of the G.R.I. charge and fuel gas components. It is stated that the basis for this is that the proposed sales would replace equivalent sales which were included in the establishment of rates in Docket No. RP82-56-000 and have since been lost or are about to be lost due to natural gas price increases. The amount proposed to be retained is 15.00 cents per million Btu (19.00 cents less 2.82 cents for fuel and 1.18 cents for the G.R.I. charge). The retained portion of the handling charge would cover any incremental administrative costs incurred by Applicant and would provide Applicant with a partial recovery of the fixed costs embedded in the sales rates established in Docket No. RP82-56-000, it is claimed. Applicant asserts that absent the proposed sales, the subject market would be served by alternative fuels and not even a partial recovery of fixed costs would occur.

It is stated that the benefits accruing to Applicant's customers, set forth in the March 12, 1984, application are not significantly affected by this amendment. It is averred that Applicant and its customers would receive a substantial reduction in both gas costs and in Canadian minimum bill deficiencies as a result of the Westcoast amending agreement.

Applicant states that by Orders-in-Council P.C. 1984-1095 and P.C. 1984-1064, dated March 29, 1984, Westcoast received Canadian authorization to implement an amending agreement dated February 28, 1984, which was necessary to effectuate the sale of incentive-priced gas to Applicant under Westcoast's existing export licenses. However, it is claimed that to implement the terms of the amending agreement, Commission approval of the requested authorization is required.

In the alternative, Applicant requests that if the Commission consideration and approval of the application as amended would delay approval of the March 12, 1984, application, the proceedings be phased and that the Commission immediately issue a certificate of public convenience and necessity authorizing the originally proposed service and separately consider and authorize the additional service proposed by the amendment.

Any person desiring to be heard or to make any protest with reference to said amendment should on or before May 4, 1984, file with the Federal Energy Regulatory Commission, Washington, D.C. 20426, a motion to intervene or a protest in accordance with the requirements of the Commission's Rules of Practice and Procedure (18 CFR 385.214, 385.211) and the Regulations under the Natural Gas Act (18 CFR 157.10). All protests filed with the Commission will be considered by it in determining the appropriate action to be taken but will not serve to make the protestants parties to the proceeding. Any person wishing to become a party to a proceeding or to participate as a party in any hearing therein must file a motion to intervene in accordance with the Commission's Rules. All persons who have heretofore filed need not file again.

Kenneth F. Plumb,

*Secretary.*

[FR Doc. 84-11182 Filed 4-25-84; 8:45 am]

BILLING CODE 6717-01-M

---

[Docket No. ER84-384-000]

## Oklahoma Gas & Electric Co.; Filing

April 23, 1984.

The filing Company submits the following:

Take notice that on April 13, 1984, Oklahoma Gas & Electric Company (OG&E) tendered for filing a letter of notification from Arkansas Power & Light Company by Middle South Services, Inc., Agent (AP&L) to OG&E regarding a reduction in the Diversity Base Amount available to OG&E.

OG&E requests that the advance notice requirement be waived to allow the reduced Diversity Base to be placed in effect at the end of the Exchange Year that ended in November 1983.

Any person desiring to be heard or to protest said filing should file a motion to intervene or protest with the Federal Energy Regulatory Commission, 825 North Capitol Street, NE., Washington, D.C. 20426, in accordance with Rules 211 and 214 of the Commission's Rules of Practice and Procedure (18 CFR 385.211, 385.214). All such motions or protests should be filed on or before May 8, 1984. Protests will be considered by the Commission in determining the appropriate action to be taken, but will not serve to make protestants parties to the proceeding. Any person wishing to become a party must file a motion to intervene. Copies of this filing are on file with the Commission and are available for public inspection.

Kenneth F. Plumb,

*Secretary.*

[FR Doc. 84-11183 Filed 4-25-84; 8:45 am]

BILLING CODE 6717-01-M

---

[Docket No. ER84-387-000]

## Oklahoma Gas & Electric Co.; Filing

April 23, 1984.

The filing Company submits the following:

Take notice that on April 13, 1984, Oklahoma Gas & Electric Company (OG&E) tendered for filing a letter of notification from OG&E to Kansas Gas and Electric Company (KG&E) regarding a reduction in the Diversity Base Amount available to the Kansas Gas and Electric Company.

OG&E requests that the advance notice requirement be waived to allow the reduced Diversity Base Amount to be placed in effect at the end of the Exchange Year that ended in November, 1983.

Any person desiring to be heard or to protest said filing should file a motion to intervene or protest with the Federal Energy Regulatory Commission, 825 North Capitol Street, NE., Washington, D.C. 20426, in accordance with Rules 211 and 214 of the Commission's Rules of Practice and Procedure (18 CFR 385.211, 385.214). All such motions or protests should be filed on or before May 8, 1984. Protests will be considered by the Commission in determining the appropriate action to be taken, but will not serve to make protestants parties to the proceeding. Any person wishing to become a party must file a motion to intervene. Copies of this filing are on file with the Commission and are available for public inspection.

Kenneth F. Plumb,

*Secretary.*

[FR Doc. 84-11184 Filed 4-25-84; 8:45 am]

BILLING CODE 6717-01-M

---

[Docket No. ER84-390-000]

## Oklahoma Gas and Electric Co.; Filing

April 23, 1984.

The filing Company submits the following:

Take notice that on April 13, 1984, Oklahoma Gas and Electric Company (OG&E) tendered for filing a new Agreement intended to superseded OG&E's Rate Schedule FERC No. 118. This Agreement is the contract between OG&E and the Southwestern Power Administration (SWPA). The new rate is identical to the old rate, and provides for the sale of Replacement Energy and Emergency Service by OG&E to SWPA.

OG&E requests an effective date of January 1, 1984, and therefore requests waiver of the Commission's notice requirements.

Any person desiring to be heard or to protest said filing should file a motion to intervene or protest with the Federal Energy Regulatory Commission, 825 North Capital Street, N.E., Washington, D.C. 20426, in accordance with Rules 211 and 214 of the Commission's Rules of Practice and Procedure (18 CFR 385.211, 385.214). All such motions or protests should be filed on or before May 8, 1984. Protests will be considered by the Commission in determining the appropriate action to be taken, but will not serve to make protestants parties to the proceeding. Any person wishing to become a party must file a motion to intervene. Copies of this filing are on file with the Commission and are available for public inspection.

Kenneth F. Plumb,

*Secretary.*

[FR Doc. 84-11185 Filed 4-25-84; 8:45 am]

BILLING CODE 6717-01-M

---

[Docket No. ER84-388-000]

## Public Service Company of Oklahoma; Filing

April 23, 1984.

The filing Company submits the following:

Take notice that on April 13, 1984, Public Service Company of Oklahoma, (PSO) tendered for filing a letter of notification from Southwestern Electric Company (SWEPCO) to PSO regarding a reduction in the Diversity Base Amount available to PSO.

PSO requests that the advance notice requirement be waived to allow the reduced Diversity Base Amount to be placed in effect at the end of the Exchange Year that ended in November, 1983.

Any person desiring to be heard or to protest said filing should file a motion to intervene or protest with the Federal Energy Regulatory Commission, 825 North Capitol Street, N.E., Washington, D.C. 20426, in accordance with Rules 211 and 214 of the Commission's Rules of Practice and Procedure (18 CFR 385.211, 385.214). All such motions or protests should be filed on or before May 8, 1984. Protests will be considered by the Commission in determining the appropriate action to be taken, but will not serve to make protestants parties to the proceeding. Any person wishing to become a party must file a motion to intervene. Copies of this filing are on file with the Commission and are available for public inspection.

Kenneth F. Plumb,

*Secretary.*

[FR Doc. 84-11186 Filed 4-25-84; 8:45 am]

BILLING CODE 6717-01-M

---

[Project No. 6025-001]

## Public Utility District No. 1 of Lewis County, Washington; Surrender of Preliminary Permit

April 23, 1984.

Take notice that the Public Utility District No. 1 of Lewis County, Washington, Permittee for the Backbone Ridge Hydroelectric Project No. 6025 has requested that its preliminary permit be terminated. The Preliminary Permit was issued on May 28, 1982, and would have expired on May 31, 1984. The Project would have been located on the Ohanapecosh River in Lewis County, Washington.

Public Utility District No. 1 of Lewis County, Washington filed the request on February 23, 1984, and the surrender of the preliminary permit for Project No. 6025 is deemed accepted as of February 23, 1984, and effective as of 30 days after the date of this notice.

Kenneth Plumb,

*Secretary.*

[FR Doc. 84-11187 Filed 4-25-84; 8:45 am]

BILLING CODE 6717-01-M

## ENVIRONMENTAL PROTECTION AGENCY

[OPTS-51509; TSH-FRL 2540-7]

### Certain Chemicals; Premanufacture Notices

*Correction*

In FR Doc. 84-6246 beginning on page 9013 in the issue of Friday, March 9, 1984, make the follow corrections:

1. On page 9015, first column, first line, "$TL_{100}$ hr (trout)" should read "$TL_{100}$ 96 hr (trout)".
2. On page 9016, first column, PMN 84-467, line nine, "5,000 mg/" should read ">5,000 mg/".
3. On the same page, first column, PMN 84-468, line six, "us" should read "use".

BILLING CODE 1505-01-M

[OPP-66107; PH-FRL 2547-1]

### Certain Pesticide Products; Intent To Cancel Registrations

*Correction*

In FR Doc. 84-7429 beginning on page 10573 in the issue of Wednesday, March 21, 1984, make the following correction:

On page 10574, first column of the table, Registration number, entry "7185-6" should read "7182-6".

BILLING CODE 1505-01-M

[OPP-180638; PH-FRL 2547-2]

### Emergency Exemptions

*Correction*

In FR Doc. 84-7428 appearing on page 10575 in the issue of Wednesday, March 21, 1984, make the following correction: In column one, SUPPLEMENTARY INFORMATION, entry 5., line two, "methalaxyl" should read "metalaxyl".

BILLING CODE 1505-01-M

[OPTS-53059; TSH-FRL 2551-5]

### Premanufacture Notices; Monthly Status Report for February 1984

*Correction*

In FR Doc. 84-8024 beginning on page 11245 in the issue of Monday, March 26, 1984, make the following corrections:

1. On page 11246, table I, PMN No. 84-363, second column, "Polyimide-anhydride-olefin" should read "Polyimide-anhydride-olefin polymer".
2. On the same page, table I, PMN No. 84-392, second column," Alkoxylated cycloaliphatic" should read "Alkoxylated cycloaliphatic diamine".
3. On page 11249, table IV, PMN No. 83-1170, column two, the term following "Generic name" should read "Monosubstitutedebenzy-sulfonylochlride".
4. On the same page, table V, PMN No. 83-845, second line of column two, "(0,0',O",O' ")" should read (0,0',0",0' ")".
5. On the same page, table V, PMN No. 84-18, second column, "(1,1. dimethylethoxy)" should read "(1,1' dimethylethoxy)".

BILLING CODE 1505-01-M

[A-9-FRL 2574-2]

### Air Quality; Issuance of a PSD Permit To American Lignite Products Co.

AGENCY: Environmental Protection Agency (EPA), Region 9.

ACTION: Notice.

SUMMARY: Notice of Approval of Prevention of Significant Air Quality Deterioration (PSD) permit to American Lignite Products Company, Amador County, California. EPA project number SJ 83-02.

FOR FURTHER INFORMATION CONTACT: Copies of the permit are available for public inspection upon request, address request to: Sandra Berger, U.S. Environmental Protection Agency, Region 9, 215 Fremont St., San Francisco, CA 94105.

SUPPLEMENTARY INFORMATION: Notice is hereby given that on January 10, 1984 the Environmental Protection agency issued a PSD permit to the applicant named above for approval to construct a lignite-fired cogeneration facility in Amador County. This permit has been issued under EPA's PSD regulations (40 CFR 52.21) and is subject to certain conditions including an allowable emission rate as follows: $NO_x$ at 61.5 lbs/hr, CO at 34.2 lbs/hr, $SO_2$ at 65.0 lbs/hr, PM at 7.5 lbs/hr.

*Best Available Control Technology* (BACT) requirements include: Fluidized bed combustor/staged combustion, limestone injection, multicyclone and baghouse.

Air Quality Impact modeling was required for PM, $SO_2$, $NO_2$, CO. Continuous monitoring is required and the source is not subject to New Source Performance Standards.

DATE: The PSD permit is reviewable under Section 307(b)(1) of the Clean Air Act only in the Ninth Circuit Court of Appeals. A petition for review must be filed by June 25, 1984.

Dated: March 26, 1984.

David P. Howekamp,

*Director, Air Management Division, Region 9.*

[FR Doc. 84-11250 Filed 4-25-84; 8:45 am]

BILLING CODE 6560-50-M

[A-9-FRL 2574-3]

### Air Quality; Issuance of a PSD Permit To Procter and Gamble Co.

AGENCY: Environmental Protection Agency (EPA), Region 9.

ACTION: Notice.

SUMMARY: Notice of Approval of Prevention of Significant Air Quality Deterioration (PSD) permit to Procter & Gamble Company, Sacramento, California. EPA project number SAC 83-01.

FOR FURTHER INFORMATION CONTACT: Copies of the permit are available for public inspection upon request, address request to: Sandra Berger, U.S. Environmental Protection Agency, Region 9, 215 Fremont St., San Francisco, CA 94105.

SUPPLEMENTARY INFORMATION: Notice is hereby given that on May 10, 1983 the Environmental Protection Agency issued a PSD permit to the applicant named above for approval to contruct a gas/oil-fired cogeneration facility to be located in Sacramento, California. This permit has been issued under EPA's PSD regulations (40 CFR 52.21) is subject to certain conditions including an allowable emission rate as follow: $SO_2$ at 0.3% sulfur fuel oil or natural gas; $NO_x$ at 0.30 lb/MM Btu oil fired and 0.26 lb/MM Btu gas fired; CO at 33 lb/hr gas fired and 22 lb/hr oil fired.

*Best Available Control Technology* (BACT) requirements include: $SO_2$—0.3% sulfur fuel oil; $NO_x$—water injection; CO—combustion control.

Air Quality Impact modeling was required for $SO_2$, $NO_x$, CO. Continuous monitoring is required and the source is subject to New Source Performance Standards.

DATE: The PSD permit is reviewable under Section 307(b)(1) of the Clean Air Act only in the Ninth Circuit Court of Appeals. A petition for review must be filed by June 25, 1984.

Dated: March 29, 1984.

David P. Howekamp,

*Director, Air Management Division, Region 9.*

[FR Doc. 84-11249 Filed 4-25-84; 8:45 am]

BILLING CODE 6560-50-M

[OPTS-51516; FRL 2574-8]

## Certain Chemicals; Premanufacture Notices

**AGENCY:** Environmental Protection Agency (EPA).

**ACTION:** Notice.

**SUMMARY:** Section 5(a)(1) of the Toxic Substances Control Act (TSCA) requires any person who intends to manufacture or import a new chemical substance to submit a premanufacture notice (PMN) to EPA at least 90 days before manufacture or impact commences. Statutory requirements for section 5(a)(1) premanufacture notices are discussed in EPA statements of the final rule published in the Federal Register of May 13, 1983 (48 FR 21722). This notice announces receipt of twenty-two PMNs and provides a summary of each.

**DATES:** Close of Review Period:

PMN 84-601: July 11, 1984

PMN 84-602, 84-603, 84-604, 84-605 and 84-606: July 1, 1984

PMN 84-607, 84-608, 84-609, 84-610 and 84-611: July 15, 1984

PMN 84-612, 84-613, 84-614, 84-615, 84-616, 84-617, 84-618, 84-619 and 84-620: July 16, 1984

PMN 84-622 and 84-623: July 17, 1984

Written Comments by:

PMN 84-601: July 11, 1984

PMN 84-602, 84-603, 84-604, 84-605 and 84-606: July 14, 1984

PMN 84-607, 84-608, 84-609, 84-610 and 84-611: July 15, 1984

PMN 84-612, 84-613, 84-614, 84-615, 84-616, 84-617, 84-618, 84-619 and 84-620: July 16, 1984

PMN 84-622 and 84-623: July 17, 1984

**ADDRESS:** Written comments, identified by the document control number "[OPTS-51516]" and the specific PMN number should be sent to: Document Control Officer (TS-793), Chemical Information Branch, Information Management Division, Office of Toxic Substances, Environmental Protection Agency, Rm. E-409, 401 M St., SW., Washington, DC 20460, (202)-382-3532).

**FOR FURTHER INFORMATION CONTACT:** Wendy Cleland-Hamnett, Chemical Control Division (TS-784), Office of Toxic Substances, Environmental Protection Agency, Rm. E-216, 401 M St. SW., Washington, DC 20460, (202) 382-3729).

**SUPPLEMENTARY INFORMATION:** The following notice contains information extracted from the non-confidential version of the submission provided by the manufacturer on the PMNs received by EPA. The complete non-confidential document is available in the Public Reading Room E-107 at the above address.

*PMN 84-601*

*Importer.* Confidential.

*Chemical.* (G) Terpene ester.

Use/Import. (S) Site-limited and commercial perfumery ingredient used in compounding of perfumes. Import range: Confidential.

*Toxicity Data.* Acute oral: 5.0 ml/kg; Irritation: Skin—Moderate, Eye—Slight/moderate. Ames Test: Non-mutagenic; Photo-irritation: Not a photo-irritant; Skin sensitization: Non-sensitizer.

*Exposure.* Processing: Dermal.

*Environmental Release/Disposal.* No release.

*PMN 84-602*

*Importer.* Confidential.

*Chemical.* (G) Polymerester.

Use/Import. (S) Lubricant additive. Import range: Confidential.

*Toxicity Data.* Acute oral: > 16 g/kg; Irritation: Skin—Non-irritant.

*Exposure.* No exposure.

*Environmental Release/Disposal.* No release.

*PMN 84-603*

*Importer.* Confidential.

*Chemical.* (G) Polymerester.

*Use/Import.* (S) Lubricant additive. Import range: Confidential.

*Toxicity Data.* Acute oral: > 16 g/kg; Irritation: Skin—Non-irritant.

*Exposure.* No exposure.

*Environmental Release/Disposal.* No release.

*PMN 84-604*

*Manufacturer.* Confidential.

*Chemical.* (G) Polymer from alkane diols, alkanedioic acid and a carbomonocyclic acid.

*Use/Production.* (G) The new substance will be utilized in an industrial coating having an open use. Prod. range: 35,000-105,000 kg/yr.

*Toxicity Data.* No data submitted.

*Exposure.* Manufacture and processing: Dermal, a total of 49 workers, up to 6 hrs/da, up to 30 da/yr.

*Environmental Release/Disposal.* 10 to 110 kg/batch released to land. Disposal by incineration and landfill.

*PMN 84-605*

*Manufacturer.* Confidential.

*Chemical.* (G) Polyester.

*Use/Production.* (G) The new substance will function as an ingredient in inks which are commercially applied to various substrates in an open manner. Prod. range: Confidential.

*Toxicity Data.* No data submitted.

*Exposure.* Manufacture and processing: Dermal, a total of 11 workers, up to 8 hrs/da, up to 260 da/yr.

*Environmental Release/Disposal.* 0.05 to 90 kg/batch released to land. Disposal by incineration and landfill.

*PMN 84-606*

*Manufacturer.* Confidential.

*Chemical.* (G) Polyester of aliphatic polyols, tall oil fatty acids, and aromatic dibasic acids.

*Use/Production.* (S) Commercial foam polyol. Prod. range: 4,000,000-6,000,000 lbs/yr.

*Toxicity Data.* No data submitted.

*Exposure.* Manufacture, processing, use and disposal: Dermal, a total of 8 workers, up to 8 hrs/da, up to 251 da/yr.

*Environmental Release/Disposal.* Less than 5 lbs released to land.

*PMN 84-607*

*Manufacturer.* Confidential.

*Chemical.* (G) Polyester polymer derived from glycols and diols and cyclic and alkyl dicarboxylic acids.

*Use/Production.* (G) Raw material for coating. Prod. range: Confidential.

*Toxicity Data.* No data submitted.

*Exposure.* Manufacture: Dermal, a total of 48 workers up to 8 hrs/da, up to 25 da/yr.

*Environmental Release/Disposal.* 2 to 3 kg/yr released.

*PMN 84-608*

*Importer.* Confidential.

*Chemical.* (G) Substituted oxazinium salt.

*Use/Import.* (S) Dye for acrylic yarn and/or fibers. Import range: 275-1,100 kg/yr.

*Toxicity Data.* Acute oral: (Females): 825 mg/kg, (Males): 825-1,470 mg/kg; Irritation: Skin—Non-irritant, Eye—Moderate; BOD: 140 mg/g.

*Exposure.* Processing: A total of 12 workers, up to 20 min/wk.

*Environmental Release/Disposal.* No release.

*PMN 84-609*

*Manufacturer.* Confidential.

*Chemical.* (G) Styrenated drying oil alkyd resin.

*Use/Production.* (G) Polymeric binder for industrial baking finishes. Prod. range: Confidential.

*Toxicity Data.* No data submitted.

*Exposure.* Confidential.

*Environmental Release/Disposal.* Confidential.

*PMN 84-610*

*Manufacturer.* Ashland Chemical Company.

*Chemical.* (G) Polymer of acrylic acid, acrylic acid esters, and maleic anhydride.

*Use/Production.* (S) Commercial pressure-sensitive adhesive. Prod. range: Confidential.

*Toxicity Data.* No data submitted.

*Exposure.* Manufacture: Dermal, a total of 5 workers, up to 6 hrs/da, up to 20 da/yr.

*Environmental Release/Disposal.* Less than 13 kg/batch released to air. Disposal by incineration.

*PMN 84-611*

*Manufacturer.* Ashland Chemical Company.

*Chemical.* (G) Copolymer of acrylic acid, acrylic acid esters and maleic anhydride.

*Use/Production.* (S) Commercial pressure-sensitive adhesive. Prod. range: Confidential.

*Toxicity Data.* No data submitted.

*Exposure.* Manufacture: Dermal, a total of 5 workers, up to 6 hrs/da, up to 20 da/yr.

*Environmental Release/Disposal.* Less than 13 Kg/batch released to air. Disposal by incineration.

*PMN 84 612*

*Manufacturer.* Essex Specialty Products, Inc.

*Chemical.* (G) Isocyanato functional polycarbamoyl (polyalkylene oxide) oligomer.

*Use/Production.* (S) Polymeric precursor for use in thermoset urethane elastomers, thermoplastically moldable elastomers or industrial engineering resins. Prod. range: Confidential.

*Toxicity Data.* No data submitted.

*Exposure.* Confidential.

*Environmental Release/Disposal.* No release.

*PMN 84-613*

*Manufacturer.* Essex Specialty Products, Inc.

*Chemical.* (G) Isocyanato functional polycarbamoyl (polyalkylene oxide) oligomer.

*Use/Production.* (S) Polymeric precursor for use in thermoset urethane elastomers, thermoplastically moldable elastomers or industrial engineering resins. Prod. range: Confidential.

*Toxicity Data.* No data submitted.

*Exposure.* Confidential.

*Environmental Release/Disposal.* No release.

*PMN 84-614*

*Manufacturer.* Essex Specialty Products, Inc.

*Chemical.* (G) Isocyanato functional polycarbamoyl ricinoleate.

*Use/Production.* (S) Polymeric precursor for use in thermoset urethane elastomers, thermoplastically moldable elastomers or industrial engineering resins. Prod. range: Confidential.

*Toxicity Data.* No data submitted.

*Exposure.* Confidential.

*Environmental Release/Disposal.* No release.

*PMN 84-615*

*Manufacturer.* Essex Specialty Products, Inc.

*Chemical.* (G) Isocyanato functional polycarbamoyl (polyalkylene oxide) oligomer.

*Use/Production.* (S) Polymeric precursor for use in thermoset urethane elastomers, thermoplastically moldable elastomers or industrial engineering resins. Prod. range: Confidential.

*Toxicity Data.* No data submitted.

*Exposure.* Confidential.

*Environmental Release/Disposal.* No release.

*PMN 84-616*

*Manufacturer.* Essex Specialty Products, Inc.

*Chemical.* (G) Isocyanato functional polycarbamoyl (polyalkylene oxide oxide-co-ricinoleate) oligomer.

*Use/Production.* (S) Polymeric precursor for use in thermoset urethane elastomers, thermoplastically moldable elastomers or industrial engineering resins. Prod. range: Confidential.

*Toxicity Data.* No data submitted.

*Exposure.* Confidential.

*Environmental Release/Disposal.* No release.

*PMN 84-617*

*Manufacturer.* Essex Specialty Products, Inc.

*Chemical.* (G) Isocyanato functional polycarbamoyl (polyalkylene oxide-co-ricinoleate) oligomer.

*Use/Production.* (S) Polymeric precursor for use in thermoset urethane elastomers, thermoplastically moldable elastomers or industrial engineering resins. Prod. range: Confidential.

*Toxicity Data.* No data submitted.

*Exposure.* Confidential.

*Environmental Release/Disposal.* No release.

*PMN 84-618*

*Manufacturer.* Essex Specialty Products, Inc.

*Chemical.* (G) Isocyanato functional polycarbamoyl (polyalkylene oxide-co-ricinoleate) oligomer.

*Use/Production.* (S) Polymeric precursor for use in thermoset urethane elastomers, thermoplastically moldable elastomers or industrial engineering resins. Prod. range: Confidential.

*Toxicity Data.* No data submitted.

*Exposure.* Confidential.

*Environmental Release/Disposal.* No release.

*PMN 84-619*

*Manufacturer.* Confidential.

*Chemical.* (G) Tetrasubstituted indolium salt.

*Use/Production.* (G) Contained use in commercial product. Prod. range: 3-5 kg/yr.

*Toxicity Data.* No data submitted.

*Exposure.* Manufacturer and processing: Dermal and inhalation, a total of 7 workers, up to 0.2 hr/da, up to 6 da/yr.

*Environmental Release/Disposal.* No release. Less than 0.05 kg/batch disposed of by biological treatment system and less than 0.1 to 0.03 kg/batch incinerated.

*PMN 84-620*

*Manufacturer.* Confidential.

*Chemical.* (G) Disubstituted propenone.

*Use/Production.* (G) Chemical intermediate. Prod, range: 50 kg/yr.

*Toxicity Data.* No data submitted.

*Exposure.* Manufacture and use: Dermal and inhalation, a total of 2 workers, up to 1.2 hrs/da, up to 6 da/yr.

*Environmental Release/Disposal.* No release. Less than 0.05 to less the 0.5 kg/batch incinerated.

*PMN 84-622*

*Manufacturer.* Confidential.

*Chemical.* (S) Alkyl polyether.

*Use/Import.* (G) Used in the manufacture of an industrial polyurethane. Prod. range: 100,000-475,000 kg/yr.

*Toxicity Data.* No data submitted.

*Exposure.* Manufacture: Dermal, a total of 10 workers, up to 2 hrs/da, up to 136 da/yr.

*Environmental Release/Disposal.* 6 kg/day released to water.

*PMN 84-623*

*Importer.* Scott Bader (USA) Inc.

*Chemical.* (G) Cross-linked copolymer of 2 propenamide and 2 propenoic acid sodium salt.

*Use/Import.* (S) Thickener for latex based, wallcovering and tile adhesives. Import range: Confidential.

*Toxicity Data.* No data submitted.

*Exposure.* Confidential.

*Environmental Release/Disposal.* Confidential.

Dated: April 20, 1984.

Linda A. Travers,

*Acting Director, Information Management Division.*

[FR Doc. 84-11241 Filed 4-25-84; 8:45 am]

BILLING CODE 6560-50-M

[A-9-FRL 2574-1]

## Issuance of a PSD Permit To Witco Chemical Corp.

**AGENCY:** Environmental Protection Agency (EPA), Region 9.

**ACTION:** Notice.

**SUMMARY:** Notice of Approval of Prevention of Significant Air Quality Deterioration (PSD) permit to Witco Chemical Corporation, Oildale, Kern County, California. EPA project number SJ 83-07.

**FOR FURTHER INFORMATION CONTACT:** Copies of the permit are available for public inspection upon request, address request to: Sandra Berger, U.S. Environmental Protection Agency, Region 9, 215 Fremont St., San Francisco, CA 94105.

**SUPPLEMENTARY INFORMATION:** Notice is hereby given that on November 2, 1983 the Environmental Protection Agency issued a PSD permit to the applicant named above for approval to construct a gas turbine cogeneration system to be located at the Witco Refinery in Kern County. This permit has been issued under EPA's PSD regulations (40 CFR 52.21) and is subject to certain conditions including an allowable emission rate as follows: Nitrogen Oxides at 371 tons/year; Carbon Monoxides at 387 tons/year.

*Best Available Control Technology* (BACT) requirements include: $NO_x$—water injection and low $NO_x$ burners; CO—combustion control.

Air Quality Impact modeling was required for $NO_x$ and CO. Continuous monitoring is required and the source is subject to New Source Performance Standards.

**DATE:** The PSD permit is reviewable under Section 307(b)(1) of the Clean Air Act only in the Ninth Circuit Court of Appeals. A petition for review must be filed by June 25, 1984.

Dated: March 29, 1984.

David P. Howekamp,

*Director, Air Management Division, Region 9.*

[FR Doc. 84-11251 Filed 4-25-84; 8:45 am]

BILLING CODE 6560-50-M

[OPTS-140049; FRL 2574-6]

## Midwest Research Institute; Transfer of Data To Contractor

**AGENCY:** Environmental Protection Agency (EPA).

**ACTION:** Notice.

**SUMMARY:** The Office of Toxic Substances (OTS) has tasked its contractor, Midwest Research Institute (MRI) of Kansas City, Missouri to review, test, and audit proposed alternative PCB destruction methods submitted by potential permittees under section 6 of the Toxic Substances Control Act (TSCA). To perform this task, MRI may require access to Confidential Business Information (CBI) submitted as part of the proposed PCB destruction methods. Documents describing the proposed PCB destruction methods will have to be transferred to MRI, including those portions containing CBI.

**DATE:** The transfer of confidential data submitted to EPA will occur no sooner than 10 working days after the date of publication of this notice in the Federal Register.

**FOR FURTHER INFORMATION CONTACT:** Jack P. McCarthy, Director, TSCA Assistance Office (TS-799), Office of Toxic Substances, Environmental Protection Agency, Rm. E-543, 401 M St., SW., Washington, DC 20460, toll-free: (800-424-9065), in Washington, DC: (544-1404), outside the USA: (Operator-202-554-1404).

**SUPPLEMENTARY INFORMATION:** Section 6(e)(1)(A) of the Toxic Substances Control Act (TSCA) requires that EPA promulgate rules for the disposal of polychlorinated biphenyls (PCBs). The rules implementing section 6(e)(1)(A) were published in the Federal Register of May 31, 1979 (44 FR 31514) and recodified in the Federal Register of May 6, 1982 (FR 19527). Those rules, among other things, generally require that various types of PCBs and PCB Articles be disposed of in landfills or destroyed in incinerators, or in high efficiency boilers approved by EPA Regional Administrators in accordance with standards set forth in the rules under 40 CFR 761.60, 761.70 and 761.75. The rules in 40 CFR 761.60(e) also provide that persons may obtain approval from the Regional Administrators for alternative methods of destroying PCBs if the alternative methods can achieve a level of performance equivalent to EPA-approved incinerators or high efficiency boilers.

To improve management of permit procedures for PCB disposal activities, the Administrator transferred review and approval authority of alternative PCB destruction methods that are used in more than one Region to the Office of Pesticides and Toxic substances in Washington, D.C. The procedural amendment of that authority was published in the Federal Register of March 30, 1983 (48 FR 13181). The purpose of the amendment was to reduce the resource burden on EPA and affected parties by eliminating duplication of effort in the regional offices and to unify the Agency's approach to PCB disposal.

Section 761.60(e) does not provide specific guidance concerning the types of information that EPA requires to review alternative destruction methods. However, the March 30, 1983 Federal Register notice provided guidance on the required information, which includes engineering reports and design drawings.

Applications received by EPA for alternative PCB destruction methods may contain proprietary information. EPA treats documents asserted to the "Confidential" by submitters as CBI, unless a determination to deny the claim of confidentiality is made by the EPA Office of General Counsel. EPA's technical review of alternative PCB destruction method applications will be assisted by EPA's contractor, Midwest Research Institute of Kansas City, MO, under EPA Contract No. 68-02-3938. Pursuant to 40 CFR 2,306(j) EPA has determined that MRI may require access to CBI to complete the contract successfully since portions of the applications may be claimed as confidential. Therefore, EPA is issuing this notice to inform all applicants for alternative PCB destruction that this firm will be allowed access to information claimed as CBI contained in alternative PCB destruction method applications. MRI's review of the materials will take place at the contractor's offices in Kansas City, MO. MRI will return copies of confidential applications to EPA after completing their review of the documents.

MRI has been authorized to have access to TSCA confidential business information under the EPA "Contractor Requirements for the Control and Security of TSCA Confidential Business Information" security manual. EPA has approved the MRI security plans and conducted the required inspections of the contractor's facilities and found them to be in compliance with the provisions of the manual. MRI personnel will be required to sign a non-disclosure agreement and be briefed on appropriate security procedures before being permitted access to confidential information, in accordance with the "TSCA Confidential Business Information Security Manual" and the Contractor Requirements Manual.

Dated: April 13, 1984.

Don R. Clay,

*Director, Office of Toxic Substances.*

[FR Doc. 84-11243 Filed 4-25-83; 8:45 am]

BILLING CODE 6560-50-M

---

[FRL 2574-2]

## Science Advisory Board, Environmental Engineering Committee; Open Meeting

Under Pub. L. 92-463, notice is hereby given that a two-day meeting of the Environmental Engineering Committee (EEC) of the Science Advisory Board will be held in Conference Room M-3906-3908, U.S. Environmental Protection Agency, 401 "M" Street, SW, Washington, D.C., 1984. The meeting will begin at 9:00 a.m. and last until approximately 5:00 p.m. each day.

The agenda for the meeting will include continued review of: (1) Proposed effluent guidelines for the organic chemical and plastics/synthetic fibers industry; (2) review of a procedure (EP-III) for determining the leaching potential of organic constituents from solid/hazardous wastes; and (3) recent revisions to the Office of Solid Wastes' RCRA Risk/Cost Analysis Model. The Committee will also begin review of a probabilistic methodology for analyzing water quality effects of urban runoff.

The meeting is open to the public. Any member of the public wishing to participate or obtain further information about the meeting should contact Harry C. Torno, Executive Secretary, at (202) 382-2552, or Terry F. Yosie, Staff Director, Science Advisory Board, at (202) 382-4126. Public comment will be accepted at the meeting. Written comment will be accepted in any form, and there will be opportunity for brief oral statements. Anyone wishing to make such comment must contact Mr. Torno prior to May 11, 1984, in order to be placed on the agenda.

In order to minimize any inconvenience due to EPA visitor control procedures, persons wishing to attend are requested to call Cheryl Fauntleroy at (202) 382-2552, so that they may be included on a roster that will be prepared for the building security guards. Attendees are also requested to enter the building at the West Tower entrance.

Terry F. Yosie,

*Staff Director, Science Advisory Board.*

April 19, 1984.

[FR Doc. 84-11244 Filed 4-25-84; 8:45 am]

BILLING CODE 6560-50-M

## FEDERAL COMMUNICATIONS COMMISSION

[MM Docket No. 84-372, File No. BPCT-830427KF and MM Docket No. 84-373, File No. BPCT-830705KL]

## Application; High Springs Television, Inc. and Christian Channel/Ro-Mar Communications, Inc.; for Construction Permit for New TV Station, Channel 53, High Springs, Florida

### Hearing Designation Order

Adopted: April 13, 1984.

Released: April 19, 1984.

By the Chief, Mass Media Bureau.

1. The Commission, by the Chief, Mass Media Bureau, acting pursuant to delegated authority, has before it the above-captioned mutually exclusive applications of High Springs Television, Inc. (HST), and Christian Channel/Ro Mar Communications, Inc. (Christian) for authority to construct a new commercial television station on Channel 53, High Springs, Florida.[1]

2. The effective radiated power, antenna heights above average terrain and other technical data submitted by the applicants indicate that there would be a significant difference in the size of the areas and populations which would be served by each of the proposals. Consequently, for the purpose of comparison, the areas and populations which would be within the predicted 64dBu (Grade B) contours, together with the availability of other television service of Grade B or greater intensity, will be considered under the standard comparative issue, for the purpose of determining whether a comparative preference should accrue to either of the applicants.

3. Since grant of Christian's application would constitute a major environmental action as defined by § 1.1305(a) of the Commission's Rules, Christian is required to submit the environmental impact information described in § 1.1311. Accordingly, Christian will be required to file, within 20 days of the release of this Order, its environmental narrative statement with the presiding Administrative Law Judge. In addition, a copy shall be filed with the Chief, Video Services Division, who will then proceed in accordance with the provisions of § 1.1313(b). Accordingly, § 1.1317 of the Rules will be waived to the extent that the comparative phase of the case will be allowed to begin before the environmental phase is completed. See *Golden State Broadcasting Corp.*, 71 F.C.C. 2d 229 (1979), *recon. denied sub nom. Old Pueblo Broadcasting Corp.*, 83 FCC 2d 337 (1980).

4. Section 76.501(a)(2) of the Commission's Rules prohibits direct or indirect ownership of both a cable television system and a television broadcast station if the television station would place a Grade B contour over any part of the service area of the cable system. Rebecca G. Evans, principal of HST, has an interest in American Communications and Television, Inc. (ACTV) which has cable television systems at Alachua, Hawthorne, Reddick and McIntosh, Florida. All four cities would be within the Grade B contour of the proposed station. Consequently, grant of HST's application would violate the rule. However, Ms. Evans has represented to the Commission that she would divest herself of all interest in, and connection with ACTV prior to the commencement of operation of the television station. Accordingly, any grant of a construction permit to HST will be conditioned upon Ms. Evans divestiture of all interest in, and connection with ACTV.

5. Section 73.610 of the Commission's Rules requires a minimum separation of 20 miles between a station operating on Channel 53 and a station or city to which Channel 61 is allocated. HST's proposed site is 8 miles from vacant Channel 61, Gainesville, Florida. HST would, therefore, be 12 miles short-spaced. In addition, Christian is 18 miles (out of a required 20 miles) from the vacant Channel 61, Gainesville, Florida, producing a short-spacing of 2 miles. Accordingly, an issue will be specified.

6. Except as indicated by the issues specified below, the applicants are qualified to construct and operate as proposed. Since these applications are mutually exclusive, the Commission is unable to make the statutory finding that their grant will serve the public interest, convenience, and necessity. Therefore, the applications must be designated for hearing in a consolidated proceeding on the issues specified below.

7. Accordingly, it is ordered, That pursuant to Section 309(e) of the Communications Act of 1934, as amended, the applications are designated for hearing in a consolidated proceeding, to be held before an Administrative Law Judge at a time and place to be specified in a subsequent Order, upon the following issues:

1. If a final environmental impact statement is issued with respect to

[1] An application was also filed on July 5, 1983, by William F. Parrish for authority to operate on Channel 53. The Parrish application was voluntarily dismissed on July 28, 1983. A motion to dismiss Parrish's application filed by HST will be dismissed as moot.

Christian Channel/Ro-mar Communications, Inc. which concludes that the proposed facilities are likely to have an adverse effect on the quality of the environment,

(a) To determine whether the proposal is consistent with the National Environmental Policy Act, as implemented by §§ 1.1301–1319 of the Commission's Rules; and

(b) Whether, in light of the evidence adduced pursuant to (a) above, the applicant is qualified to construct and operate as proposed

2. To determine, with respect to each applicant whether its proposed site is consistent with the minimum mileage separation requirements of § 73.610 of the Commission's Rules, and if not, whether circumstances exist which would warrant a waiver of the rule.

3. To determine which of the proposals would, on a comparative basis, better serve the public interest.

4. To determine, in light of the evidence adduced pursuant to the foregoing issues, which of the applications should be granted.

8. It is further ordered, That § 1.1317 of the Commission's Rules is waived to the extent indicated herein. Within 30 days of the release of this Order, Christian Channel/Ro-Mar shall submit an amended environmental narrative statement required by § 1.1311 of the Rules to the presiding Administrative Law Judge, with a copy to the Chief, Video Services Division.

9. It is further ordered, That, in the event of a grant of High Springs Television, Inc.'s application, the construction permit will be conditioned as follows: Prior to the commencement of operation of the television station authorized herein, permittee shall certify to the Commission that Rebecca G. Evans has divested herself of all interest in, and connection with, American Communications and Television, Inc.

10. It is further ordered, That the motion to dismiss filed by HST is dismissed as moot.

11. It is further ordered, That, to avail themselves of the opportunity to be heard, the applicants herein shall, pursuant to § 1.221(c) of the Commission's Rules, in person or by attorney, within 20 days of the mailing of this Order, file with the Commission in triplicate, a written appearance stating an intention to appear on the date fixed for the hearing and to present evidence on the issues specified in this Order.

12. It is further ordered, That the applicants herein shall, pursuant to section 311(a)(2) of the Communications Act of 1934, as amended, and § 73.3594 of the Commission's Rules, give notice of the hearing within the time and in the manner prescribed in such Rule, and shall advise the Commission of the publication of such notice a required by § 73.3594(g) of the Rules.

Federal Communications Commission.

Roy J. Stewart,

*Chief, Video Services Division, Mass Media Bureau.*

[FR Doc. 84-11203 Filed 4-25-84; 8:45 am]

BILLING CODE 6712-01-M

## FEDERAL MARITIME COMMISSION

### Agreement Filed

The Federal Maritime Commission hereby gives notice that the following agreement has been filed with the Commission for approval pursuant to section 15 of the Shipping Act, 1916, as amended (39 Stat. 733, 75 Stat. 763, 46 U.S.C. 814).

Interested parties may inspect and may request a copy of the agreement and the supporting statement at the Washington, D.C. Office of the Federal Maritime Commission, 1100 L Street, NW., Room 10325. Interested parties may submit protests or comments on the agreement to the Secretary, Federal Maritime Commission, Washington, D.C. 20573, within 20 days after the date of the Federal Register in which this notice appears. The requirements for comments and protests are found in § 522.7 of Title 46 of the Code of Federal Regulations. Interested persons should consult this section before communicating with the Commission regarding a pending agreement.

Any person filing a comment or protest with the Commission shall, at the same time, deliver a copy of that document to the person filing the agreement at the address shown below.

Agreement No.: T–4177.

Title: Port of Seattle and Seattle International Terminal, Inc., Terminal and Crane Lease Agreement.

Parties: Port of Seattle (Port), Seattle International Terminal, Inc. (SITI).

Synopsis: Agreement No. T–4177 provides that the Port will lease to SITI preferential use areas and equipment at Terminals 18 and 20, Port of Seattle. The premises will be used for a Public Container/Break Bulk Marine Terminal Facility. The term of the agreement will be for five-years, commencing upon Commission approval. Agreements Nos. T–4042 and T–3787 will be cancelled when Agreement No. T–4177 is approved.

Filing party: Frank H. Clark, Director of Real Estate, Port of Seattle, Post Office Box 1209, Seattle, Washington 98111.

By order of the Federal Maritime Commission.

Dated: April 20, 1984.

Francis C. Hurney,

*Secretary.*

[FR Doc. 84-11176 Filed 4-25-84; 8:45 am]

BILLING CODE 6730-01-M

## FEDERAL RESERVE SYSTEM

### Bar Harbor Bankshares, et al.; Formations of; Acquisitions by; and Mergers of Bank Holding Companies

The companies listed in this notice have applied for the Board's approval under section 3 of the Bank Holding Company Act (12 U.S.C. 1842) and § 225.14 of the Board's Regulation Y (49 FR 794) to become a bank holding company or to acquire a bank or bank holding company. The factors that are considered in acting on the applications are set forth in section 3(c) of the Act (12 U.S.C. 1842(c)).

Each application is available for immediate inspection at the Federal Reserve Bank indicated. Once the application has been accepted for processing, it will also be available for inspection at the offices of the Board of Governors. Interested persons may express their views in writing to the Reserve Bank or to the offices of the Board of Governors. Any comment on an application that requests a hearing must include a statement of why a written presentation would not suffice in lieu of a hearing, identifying specifically any questions of fact that are in dispute and summarizing the evidence that would be presented at a hearing.

Unless otherwise noted, comments regarding each of these applications must be received not later than May 18, 1984.

A. Federal Reserve Bank of Boston (Richard E. Randall, Vice President) 600 Atlantic Avenue, Boston, Massachusetts 02106:

1. *Bar Harbor Bankshares,* Bar Harbor, Maine; to become a bank holding company by acquiring at least 85 percent of the voting shares of Bar Harbor Banking and Trust Company, Bar Harbor, Maine.

2. *Grand Bank Corporation,* Marblehead, Massachusetts; to become a bank holding company by acquiring 100 percent of the voting shares of The National Grand Bank of Marblehead, Marblehead, Massachusetts.

3. *Union Bankshares Company,* Ellsworth, Maine; to become a bank holding company by acquiring 85 percent of the voting shares of Union

Trust Company of Ellsworth, Ellsworth, Maine.

B. Federal Reserve Bank of Richmond (Lloyd W. Bostian, Jr., Vice President) 701 East Byrd Street, Richmond, Virginia 23261:

1. *F&M Financial Corporation*, Granite Quarry, North Carolina; to become a bank holding company by acquiring 90 percent of the voting shares of Farmers & Merchants Bank, Granite Quarry, North Carolina.

C. Federal Reserve Bank of Atlanta (Robert E. Heck, Vice President) 104 Marietta Street, N.W., Atlanta, Georgia 30303:

1. *Universal Bancorp*, Miami, Florida; to become a bank holding company by acquiring 100 percent of the voting shares of Universal National Bank, Miami, Florida.

D. Federal Reserve Bank of St. Louis (Delmer P. Weisz, Vice President) 411 Locust Street, St. Louis, Missouri 63166:

1. *Carlinville National Bank Shares, Inc.*, Carlinville, Illinois; to become a bank holding company by acquiring 100 percent of the voting shares of the Successor by merger to the Carlinville National Bank, Carlinville, Illinois.

E. Federal Reserve Bank of Kansas City (Thomas M. Hoenig, Vice President) 925 Grand Avenue, Kansas City, Missouri 64198:

1. *Central Bank Shares, Inc.*, Cheyenne, Wyoming; to become a bank holding company by acquiring 100 percent of the voting shares of American National Bank of Riverton, Riverton, Wyoming.

2. *First Colorado Bankshares, Inc.*, Englewood, Colorado; to become a bank holding company by acquiring 100 percent of the voting shares of National Bank of Arapahoe, Englewood, Colorado.

F. Federal Reserve Bank of Dallas (Anthony J. Montelaro, Vice President) 400 South Akard Street, Dallas, Texas 75222:

1. *Lake Cities Financial Corporation*, Lake Dallas, Texas; to become a bank holding company by acquiring 80 percent of the voting shares of Lake Cities State Bank, Lake Dallas, Texas.

Board of Governors of the Federal Reserve System, April 20, 1984.

James McAfee,

*Associate Secretary of the Board.*

[FR Doc. 84-11209 File 4-25-84; 8:45 am]

BILLING CODE 6210-01-M

## Central Arkansas Bancshares, Inc.; Application To Engage de Novo in Permissible Nonbanking Activities

The company listed in this notice has filed an application under § 225.23(a)(1) of the Board's Regulation Y (49 FR 794) for the Board's approval under section 4(c)(8) of the Bank Holding Company Act (12 U.S.C. 1843(c)(8)) and § 225.21(a) of Regulation Y (49 FR 794) to commence or to engage *de novo*, either directly or through a subsidiary, in a nonbanking activity that is listed in § 225.25 of Regulation Y as closely related to banking and permissible for bank holding companies. Unless otherwise noted, such activities will be conducted throughout the United States.

The application is available for immediate inspection at the Federal Reserve Bank indicated. Once the application has been accepted for processing, it will also be available for inspection at the offices of the Board of Governors. Interested persons may express their views in writing on the question whether consummation of the proposal can "reasonably be expected to produce benefits to the public, such as greater convenience, increased competition, or gains in efficiency, that outweigh possible adverse effects, such as undue concentration of resources, decreased or unfair competition, conflicts of interests, or unsound banking practices." Any request for a hearing on this question must be accompanied by a statement of the reasons a written presentation would not suffice in lieu of a hearing, identifying specifically any questions of fact that are in dispute, summarizing the evidence that would be presented at a hearing, and indicating how the party commenting would be aggrieved by approval of the proposal.

Comments regarding the application must be received at the Reserve Bank indicated or the offices of the Board of Governors not later than May 10, 1984.

A. Federal Reserve Bank of St. Louis (Delmer P. Weisz, Vice President) 411 Locust Street, St. Louis, Missouri 63166:

1. *Central Arkansas Bancshares, Inc.*, Malvern Arkansas; to engage *de novo* in acting as agent in the sale of mortgagors' decreasing term life insurance; mortgagors' accident, health and sickness insurance: credit life insurance: credit accident (disability arising from an accident) and credit health and accident insurance; all directly related to extensions or credit made by its subsidiary banks. These activities will be provided in the State of Arkansas.

Board of Governors of the Federal Reserve System, April 20, 1984.

James McAfee,

*Associate Secretary of the Board.*

[FR Doc. 84-11212 Filed 4-25-84; 8:45 am]

BILLING CODE 6210-01-M

## Dominion Bankshares Corp.; Application To Engage de Novo in Permissible Nonbanking Activities

The company listed in this notice has filed an application under § 225.23(a)(1) of the Board's Regulation Y (49 FR 794) for the Board's approval under section 4(c)(8) of the Bank Holding Company Act (12 U.S.C. 1843(c)(8)) and § 225.21(a) of Regulation Y (49 FR 794) to commerce or to engage *de novo*, either directly or through a subsidiary, in a nonbanking activity that is listed in section 225.25 of Regulation Y as closely related to banking and permissible for bank holding companies. Unless otherwise noted, such activities will be conducted throughout the United States.

The application is available for immediate inspection at the Federal Reserve Bank indicated. Once the application has been accepted for processing, it will also be available for inspection at the offices of the Board of Governors. Interested persons may express their views in writing on the question whether consummation of the proposal can "reasonably be expected to produce benefits to the public, such as greater convenience, increased competition, or gains in efficiency, that outweight possible adverse effects, such as undue concentration of resources, decresed or unfair competition, conflicts of interests, or unsound banking practices." Any request for a hearing on this question must be accompanied by a statement of the reasons a written presentation would not suffice in lieu of a hearing, identifying specifically any questions of fact that are in dispute, summarizing the evidence that would be presented at a hearing, and indicating how the party commenting would be aggrieved by approval of the proposal.

Comments regarding the application must be received at the Reserve Bank indicated or the offices of the Board of Governors not later than May 15, 1984.

A. Federal Reserve Bank of Richmond (Lloyd W Bostian, Jr., Vice President) 701 East Byrd Street, Richmond, Virginia 23261:

1. *Dominion Bankshares Corporation*, Roanoke, Virginia; to engage through its subsidiary, Dominion bankshares Leasing Corporation, Roanoke, Virginia, in leasing personal property or acting as agent, broker, or advisor in leasing such property; making loans and other extensions of credit for its own account and for the account of others; servicing such loans and other extensions of credit for others; and in the sale of credit life insurance, credit accident and health insurance, credit disability insurance, all

directly related to its extensions of credit.

Board of Governors of the Federal Reserve System, April 20, 1984.

James McAfee,

*Associated Secretary of the Board.*

[FR Doc. 84-11213 Filed 4-25-84; 8:45 am]

BILLING CODE 6210-01-M

## First Bank System, Inc.; Application To Engage de Novo in Nonbanking Activities

First Bank System, Inc., Minneapolis, Minnesota, has filed an application under § 225.23(a)(3) of the Board's Regulation Y (49 FR 794) for the Board's approval under section 4(c)(8) of the Bank Holding Company Act (12 U.S.C. 1843(c)(8)) and § 225.21(a) of Regulation Y (49 FR 794), to engage *de novo* through a national bank subsidiary in the making of consumer loans, including residential mortgage loans (1–4 family dwellings only), and deposit-taking, including demand deposits. The proposed subsidiary will not engage in commercial lending transactions as defined in Regulation Y. The activities will be engaged in by the subsidiary bank in Sarasota, Florida, serving the State of Florida. The Board has determined by order that such activities are closely related to banking. *U.S. Trust Company* (Press Release of March 23, 1984).

The proposed subsidiary is: First Trust Company of Florida, N.A., Sarasota, Florida.

The application is available for immediate inspection at the Federal Reserve Bank of Minneapolis. Once the application has been accepted for processing, it will also be available for inspection at the offices of the Board of Governors. Although the Board is publishing notice of this application, under established Board policy the record of the application will not be regarded as complete and the Board will not act on the application unless and until a preliminary charter for the proposed national bank subsidiary has been submitted to the Board.

Interested persons may express their views in writing on the question whether consummation of the proposal can "reasonably be expected to produce benefits to the public, such as greater convenience, increased competition, or gains in efficiency, that outweigh possible adverse effects, such as undue concentration of resources, decreased or unfair competition, conflicts of interests, or unsound banking practices." Any request for a hearing on this question must be accompanied by a statement of the reasons a written presentation would not suffice in lieu of a hearing, identifying specifically any questions of fact that are in dispute, summarizing the evidence that would be presented at a hearing, and indicating how the party commenting would be aggrieved by approval of the proposal.

Comments regarding the application must be received at the Federal Reserve Bank of Minneapolis or the offices of the Board of Governors not later than May 18, 1984.

Board of Governors of the Federal Reserve System, April 20, 1984.

James McAfee,

*Associate Secretary of the Board.*

[FR Doc. 84-11215 Filed 4-25-84; 8:45 am]

BILLING CODE 6210-01-M

## First Vermont Financial Corp., et al.; Acquisitions of Companies Engaged in Permissible Nonbanking Activities

The organizations listed in this notice have applied under § 225.23(a)(2) or (f) of the Board's Regulation Y (49 FR 794) for the Board's approval under section 4(c)(8) of the Bank Holding Company Act (12 U.S.C. 1843(c)(8)) and § 225.21(a) of Regulation Y (49 FR 794) to acquire or control voting securities or assets of a company engaged in a nonbanking activity that is listed in § 225.25 of Regulation Y as closely related to banking and permissible for bank holding companies. Unless otherwise noted, such activities will be conducted throughout the United States.

Each application is available for immediate inspection at the Federal Reserve Bank indicated. Once the application has been accepted for processing, it will also be available for inspection at the offices of the Board of Governors. Interested persons may express their views in writing on the question whether consummation of the proposal can "reasonably be expected to produce benefits to the public, such as greater convenience, increased competition, or gains in efficiency, that outweigh possible adverse effects, such as undue concentration of resources, decreased or unfair competition, conflicts of interests, or unsound banking practices." Any request for a hearing on this question must be accompanied by a statement of the reasons a written presentation would not suffice in lieu of a hearing, identifying specifically any questions of fact that are in dispute, summarizing the evidence that would be presented at a hearing, and indicating how the party commenting would be aggrieved by approval of the proposal.

Unless otherwise noted, comments regarding each of these applications must be received at the Reserve Bank indicated for the application or the offices of the Board of Governors not later than May 17, 1984.

A. **Federal Reserve Bank of Boston** (Richard E. Randall, Vice President) 600 Atlantic Avenue, Boston, Massachusetts 02106:

1. *First Vermont Financial Corporation*, Brattleboro, Vermont; to acquire Vermont Mortgage Group, Inc., Wilmington, Vermont; and thereby engage in originating, packaging, selling and servicing of residential mortgages, vacation home (second home) mortgages, and condominium mortgages to various secondary market sources; participating in the secondary market programs of federal agencies such as the Federal National Mortgage Association and the Government National Mortgage Association; interim lending including development and construction lending of residential, commercial and industrial projects—funding projects through one or more phases. Such interim lending to be undertaken only in conjunction with permanent take out commitments from third parties; originating, packaging, selling and servicing of second mortgage loans and home improvement loans; originating, packaging, selling and servicing of commercial mortgages and industrial mortgages. These activities would be performed in Vermont, Massachusetts, New Hamsphire, Maine, and New York.

B. **Federal Reserve Bank of Chicago** (Franklin D. Dreyer, Vice President) 230 South LaSalle Street, Chicago, Illinois 60690:

1. *First Lena Corporation*, Lena, Illinois; to acquire First Lena Insurance Agency, Inc., Lena, Illinois, and thereby engage in the sale of general insurance in a town with a population not exceeding 5,000. These activities would be performed in the Village of Lena and the surrounding rural areas.

Board of Governors of the Federal Reserve System, April 20, 1984.

James McAfee,

*Associate Secretary of the Board.*

[FR Doc. 84-11216 Filed 4-5-84; 8:45 am]

BILLING CODE 6210-01-M

## Firstbank of Illinois Co.; Applications To Engage de Novo in Permissible Nonbanking Activities

The companies listed in this notice have filed an application under § 225.23(a)(1) of the Board's Regulation Y (49 FR 794) for the Board's approval under section 4(c)(8) of the Bank Holding Company Act (12 U.S.C. 1843(c)(8)) and § 225.21(a) of Regulation

Y (49 FR 794) to commence or to engage *de novo*, either directly or through a subsidiary, in a nonbanking activity that is listed in § 225.25 of Regulation Y as closely related to banking and permissible for bank holding companies. Unless otherwise noted, such activities will be conducted throughout the United States.

Each application is available for immediate inspection at the Federal Reserve Bank indicated. Once the application has been accepted for processing, it will also be available for inspection at the offices of the Board of Governors. Interested persons may express their views in writing on the question whether consummation of the proposal can "reasonably be expected to produce benefits to the public, such as greater convenience, increased competition, or gains in efficiency, that outweigh possible adverse effects, such as undue concentration of resources, decreased or unfair competition, conflicts of interests, or unsound banking practices." Any request for a hearing on this question must be accompanied by a statement of the reasons a written presentation would not suffice in lieu of a hearing, identifying specifically any questions of fact that are in dispute, summarizing the evidence that would be presented at a hearing, and indicating how the party commenting would be aggrieved by approval of the proposal.

Unless otherwise noted, comments regarding the applications must be received at the Reserve Bank indicated or the offices of the Board of Governors not later than May 15, 1984.

A. Federal Reserve Bank of Chicago (Franklin D. Dreyer, Vice President) 230 South LaSalle Street, Chicago, Illinois 60690:

1. *Firstbank of Illinois Co.*, Springfield, Illinois; to engage *de novo* through its subsidiary Firstbank Mortgage Co., Springfield, Illinois, in the mortgage banking business, including originating, acquiring, and servicing mortgage loans to commercial and consumer customers; and the sale of credit accident, credit health and credit life insurance directly related to such extensions of credit.

B. Federal Reserve Bank of St. Louis (Delmer P. Weisz, Vice President) 411 Locust Street, St. Louis, Missouri 63166:

1. *Peoples Investment Corporation*, Cuba, Missouri; to acquire Dorf Insurance Agency, Inc., Cuba, Missouri, and thereby engage in the sale of credit life, credit accident, and credit health insurance directly related to extensions of credit by bank and its existing and future subsidiaries serving towns with populations not exceeding 5,000. Applicant also proposes to engage in data processing activities and the leasing of personal property. These activities will be conducted in Cuba, Missouri and the surrounding rural area.

Board of Governors of the Federal Reserve System, April 20, 1984.

James McAfee,

*Associate Secretary of the Board.*

[FR Doc. 84-11214 Filed 4-25-84; 8:45 am]

BILLING CODE 6210-01-M

## Fleet Financial Group, Inc., et al.; Applications To Engage de Novo In Permissible Nonbanking Activities

The companies listed in this notice have filed an application under § 225.23(a)(1) of the Board's Regulation Y (49 FR 794) for the Board's approval under section 4(c)(8) of the Bank Holding Company Act (12 U.S.C. 1843(c)(8)) and § 225.21(a) of Regulation Y (49 FR 794) to commence or to engage *de novo*, either directly or through a subsidiary, in a nonbanking activity that is listed in § 225.25 of Regulation Y as closely related to banking and permissible for bank holding companies. Unless otherwise noted, such activities will be conducted throughout the United States.

Each application is available for immediate inspection at the Federal Reserve Bank indicated. Once the application has been accepted for processing, it will also be available for inspection at the offices of the Board of Governors. Interested persons may express their views in writing on the question whether consummation of the proposal can "reasonably be expected to produce benefits to the public, such as greater convenience, increased competition, or gains in efficiency, that outweigh possible adverse effects, such as undue concentration of resources, decreased or unfair competition, conflicts of interests, or unsound banking practices." Any request for a hearing on this question must be accompanied by a statement of the reasons a written presentation would not suffice in lieu of a hearing, identifying specifically any questions of fact that are in dispute, summarizing the evidence that would be presented at a hearing, and indicating how the party commenting would be aggrieved by approval of the proposal.

Unless otherwise noted, comments regarding the applications must be received at the Reserve Bank indicated or the offices of the Board of Governors not later than May 16, 1984.

A. Federal Reserve Bank of Boston (Richard E. Randall, Vice President) 600 Atlantic Avenue, Boston, Massachusetts 02106:

1. *Fleet Financial Group, Inc.*, Providence, Rhode Island; to engage *de novo* through its subsidiary, Fleet Finance, Inc. (Delaware), Iselin, New Jersey; in the making of consumer loans on both a secured and unsecured basis; financing of installment sales contracts; making of first and second mortgage loans pursuant to § 225.25(b)(1); and offering of credit-life and credit-accident and health insurance and credit property insurance.

B. Federal Reserve Bank of San Francisco (Harry W. Green, Vice President) 101 Market Street, San Francisco, California 94105:

1. *BankAmerica Corporation*, San Francisco, California; to continue to engage, through its wholly-owned subsidiary, BA Investment Management Corporation, a Delaware corporation, in the activities of an investment and financial adviser including, but not limited to, acting as investment adviser as defined in the Investment Company Act of 1940, providing portfolio investment advice and furnishing general economic information and advice, general economic statistical forecasting services, and industry studies. These activities would be conducted worldwide.

Board of Governors of the Federal Reserve System, April 20, 1984.

James McAfee,

*Associate Secretary of the Board.*

[FR Doc. 84-11217 Filed 4-25-84; 8:45 am]

BILLING CODE 6210-01-M

## Seattle Bancorporation; Formation of, Acquisition by, or Merger of Bank Holding Companies; and Acquisition of Nonbanking Company

The company listed in this notice has applied under § 225.14 of the Board's Regulation Y (49 FR 794) for the Board's approval under section 3 of the Bank Holding Company Act (12 U.S.C. 1842) to become a bank holding company or to acquire voting securities of a bank or bank holding company. The listed company has also applied under § 225.23(a)(2) of Regulation Y (49 FR 794) for the Board's approval under section 4(c)(8) of the Bank Holding Company Act (12 U.S.C. 1843(c)(8)) and § 225.21(a) of Regulation Y (49 FR 794) to acquire or control voting securities or assets of a company engaged in a nonbanking activity that is listed in § 225.25 of Regulation Y as closely related to banking and permissible for bank holding companies, or to engage in such an activity. Unless otherwise noted,

these activities will be conducted throughout the United States.

The application is available for immediate inspection at the Federal Reserve Bank indicated. Once the application has been accepted for processing, it will also be available for inspection at the offices of the Board of Governors. Interested persons may express their views in writing on the question whether consummation of the proposal can "reasonably be expected to produce benefits to the public, such as greater convenience, increased competition, or gains in efficiency, that outweigh possible adverse effects, such as undue concentration of resources, decreased or unfair competition, conflicts of interests, or unsound banking practicies." Any request for a hearing on this question must be accompanied by a statement of the reasons a written presentation would not suffice in lieu of a hearing, identifying specifically any questions of fact that are in dispute, summarizing the evidence that would be presented at a hearing, and indicating how the party commenting would be aggrieved by approval of the proposal.

Comments regarding the application must be received at the Reserve Bank indicated or the offices of the Board of Governors not later than May 18, 1984.

A. **Federal Reserve Bank of San Francisco** (Harry W. Green, Vice President) 101 Market Street, San Francisco, California 94105:

1. *Seattle Bancorporation*, Seattle, Washington; to acquire 100 percent of the voting shares of Alaska Pacific Bancorporation, Anchorage, Alaska, and thereby indirectly acquiring Alaska Pacific Bank, Anchorage, Alaska and First National Bank of Fairbanks, Fairbanks, Alaska.

Seattle Bancorporation has also applied to engage in nonbanking activities through the acquisition of the following companies: Alaska Pacific Mortgage Company, Anchorage, Alaska (engaging in the solicitation, origination, servicing and sale of residential term mortgage loans, in the states of Alaska and California); Peutek Leasing, Inc., San Jose, California (engaging in direct leasing and the brokering of leases of all types of personal property, in the Western United States); and All Coast Financial, Inc., San Diego, California (engaging in the origination, servicing and sale on a wholesale basis of one to four family residential loans—other than development and/or construction loans, in the entire United States).

Board of Governors of the Federal Reserve System, April 20, 1984.

James McAfee,

*Associate Secretary of the Board.*

[FR Doc. 84-11210 Filed 4-25-84; 8:45 am]

BILLING CODE 6210-01-M

## Security Pacific National Bank; Corporation to do Business Under Section 25(a) of the Federal Reserve Act

An application has been submitted for the Board's approval of the organization of a corporation to do business under section 25(a) of the Federal Reserve Act ("Edge Corporation"), to be known as Security Pacific International Banking Corporation, Los Angeles, California, and to establish branches of the Edge Corporation in Chicago, Illinois; Cleveland, Ohio; Houston, Texas; Minneapolis, Minnesota; and Seattle, Washington.

Security Pacific International Banking Corporation would operate as a subsidiary of Security Pacific National Bank, Los Angeles, California. The factors that are to be considered in acting on the application are set forth in § 211.4(a) of the Board's Regulation K (12 CFR 211.4(a)).

The application may be inspected at the offices of the Board of Governors or at the Federal Reserve Bank of San Francisco. Any person wishing to comment on the application should submit views in writing to William W. Wiles, Secretary, Board of Governors of the Federal Reserve System, Washington, D.C. 20551 to be received not later than May 18, 1984. Any comment on an application that requests a hearing must include a statement of why a written presentation would not suffice in lieu of a hearing, identify specifically any questions of fact that are in dispute, and summarize the evidence that would be presented at a hearing.

Board of Governors of the Federal Reserve System, April 20, 1984.

James McAfee,

*Associate Secretary of the Board.*

[FR Doc. 84-11218 Filed 4-25-84; 8:45 am]

BILLING CODE 6210-01-M

## Ultra Bancorporation, et al.; Formations of; Acquisitions by; and Mergers of Bank Holding Companies

The companies listed in this notice have applied for the Board's approval under section 3 of the Bank Holding Company Act (12 U.S.C. 1842) and § 225.14 of the Board's Regulation Y (49 FR 794) to become a bank holding company or to acquire a bank or bank holding company. The factors that are considered in acting on the applications are set forth in section 3(c) of the Act (12 U.S.C. 1842(c)).

Each application is available for immediate inspection at the Federal Reserve Bank indicated. Once the application has been accepted for processing, it will also be available for inspection at the offices of the Board of Governors. Interested persons may express their views in writing to the Reserve Bank or to the offices of the Board of Governors. Any comment on an application that requests a hearing must include a statement of why a written presentation would not suffice in lieu of a hearing, identifying specifically any questions of fact that are in dispute and summarizing the evidence that would be presented at a hearing.

Unless otherwise noted, comments regarding each of these applications must be received not later than May 18, 1984.

A. **Federal Reserve Bank of New York** (A. Marshall Puckett, Vice President) 33 Liberty Street, New York, New York 10045:

1. *Ultra Bancorporation*, Bridgewater, New Jersey; to acquire 100 percent of the voting shares of The Peoples National Bank of Central Jersey, Piscataway, New Jersey.

B. **Federal Reserve Bank of St. Louis** (Delmer P. Weisz, Vice President) 411 Locust Street, St. Louis, Missouri 63166:

1. *Continental Bank Shares, Inc.*, Louisville, Kentucky; to become a bank holding company by acquiring 100 percent of the voting shares of Continental National Bank of Kentucky, Louisville, Kentucky.

C. **Federal Reserve Bank of Kansas City** (Thomas M. Hoenig, Vice President) 925 Grand Avenue, Kansas City, Missouri 64198:

1. *Financial and Property Management, Inc.*, Emporia, Kansas; to become a bank holding company by acquiring an additional 27.5 percent of Educators Investment Company of Kansas, Inc., Emporia, Kansas and Citizens National Bank and Trust Company, Emporia, Kansas.

Board of Governors of the Federal Reserve System, April 20, 1984.

James McAfee,

*Associate Secretary of the Board.*

[FR Doc. 84-11211 Filed 4-25-84; 8:45 am]

BILLING CODE 6210-01-M

## DEPARTMENT OF HEALTH AND HUMAN SERVICES

### Centers for Disease Control

### Mine Health Research Advisory Committee; Meeting

In accordance with Section 10(a)(2) of the Federal Advisory Committee Act (Pub. L. 92–463), the Centers for Disease Control (CDC) announces the following National Institute for Occupational Safety and Health (NIOSH) Committee meeting:

Name: Mine Health Research Advisory Committee.

Date: May 10–11, 1984.

Place: Auditorium, Robert A. Taft Laboratories, 4676 Columbia Parkway, Cincinnati, Ohio 45226.

Time and Type of Meeting:

Closed: 9:00 a.m. to 9:30 a.m.—May 10

Open: 9:30 a.m. to 4:30 p.m.—May 10

Open: 9:00 a.m. to 12:00 noon—May 11

Contact Person: Roy M. Fleming, Sc.D., Executive Secretary, NIOSH, CDC, Building 1, Room 3053, 1600 Clifton Road, NE., Atlanta, Georgia 30333, Phone: (404) 329–3343.

Purpose: The Committee is charged with advising the Secretary of Health and Human Services on matters involving or relating to mine health research, including grants and contracts for such research.

Agenda: Agenda items for the meeting will include announcements, consideration of minutes of previous meeting and future meeting dates, health and safety research studies on diesels, training activities, x-ray surveillance program for underground coal miners, response to the Committee's report on end-of-service-life indicators, direct reading instruments for dusts, and prevention strategies for musculoskeletal problems. On May 10, beginning at 9:00 a.m. through 9:30 a.m., the Committee will be performing the final review of the mine health research grant applications for Federal assistance. This portion of the meeting will not be open to the public in accordance with the provisions set forth in section 552b(c)(6), Title 5, U.S. Code, and the Determination of the Director, Centers for Disease Control, pursuant to Pub. L. 92–463.

Agenda items are subject to change as priorities dictate.

The portion of the meeting so indicated is open to the public for observation and participation. Anyone wishing to make an oral presentation should notify the contact person listed above as soon as possible before the meeting. The request should state the amount of time desired, the capacity in which the person will appear, and a brief outline of the presentation. Oral presentations will be scheduled at the discretion of the Chairperson and as time permits. Anyone wishing to have a question answered during the meeting by a scheduled speaker should submit the question in writing, along with his or her name and affiliation, through the Executive Secretary to the Chairperson. At the discretion of the Chairperson, and as time permits appropriate questions will be asked of the speaker.

A roster of members and other relevant information regarding the meeting may be obtained from the contact person listed above.

Dated: April 24, 1984.

William C. Watson, Jr.,

*Acting Director, Centers for Disease Control.*

[FR Doc. 84-11419 Filed 4-25-84; 8:45 am]

BILLING CODE 4160-19-M

---

### Food and Drug Administration

[Docket No. 84F-0099]

### Bonewitz Chemical Services, Inc.; Filing of Food Additive Petition

**AGENCY:** Food and Drug Administration.

**ACTION:** Notice.

**SUMMARY:** The Food and Drug Administration (FDA) is announcing that Bonewitz Chemical Services, Inc., has filed a petition proposing that the food additive regulations be amended to provide for the safe use of an aqueous solution containing hydrogen peroxide, peracetic acid, acetic acid, and 1-hydroxyethylidene-1, 1-diphosphonic acid as a sanitizing solution on food-contact surfaces.

**FOR FURTHER INFORMATION CONTACT:** James H. Maryanski, Center for Food Safety and Applied Nutrition (formerly Bureau of Foods) (HFF–334), Food and Drug Administration, 200 C St. SW., Washington, DC 20204, 202–472–5740.

**SUPPLEMENTARY INFORMATION:** Under the Federal Food, Drug, and Cosmetic Act (sec. 409(b)(5), 72 Stat. 1786 (21 U.S.C. 348(b)(5))), notice is given that a petition (FAP 4H3781) has been filed by Bonewitz Chemical Services, Inc., Burlington, IA 52601, proposing that § 187.1010 *Sanitizing solutions* (21 CFR 178.1010) be amended to provide for the safe use of an aqueous solution containing hydrogen peroxide (CAS Reg. No. 7722–84–1), peracetic acid (CAS Reg. No. 79–21–0), acetic acid (CAS Reg. No. 64–19–7), and 1-hydroxyethylidene-1, 1-diphosphonic acid (CAS Reg. No. 2809–21–4) as a sanitizing solution on food-contact surfaces.

The potential environmental impact of this action is being reviewed. If the agency finds that an environmental impact statement is not required and this petition results in a regulation, the notice of availability of the agency's finding of no significant impact and the evidence supporting that finding will be publishing with the regulation in the Federal Register in accordance with 21 CFR 25.40(c) (proposed December 11, 1979; 44 FR 71742).

Dated: April 11, 1984.

Sanford A. Miller,

*Director, Center for Food Safety and Applied Nutrition.*

[FR Doc. 84-11197 Filed 4-25-84; 8:45 am]

BILLING CODE 4160-01-M

---

[Docket No. 84F-0097]

### Dow Chemical Co.; Filing of Food Additive Petition

**AGENCY:** Food and Drug Administration.

**ACTION:** Notice.

**SUMMARY:** The Food and Drug Administration (FDA) is announcing that Dow Chemical Co. has filed a petition proposing that the food additive regulations be amended to provide for the safe use of phenol in polycarbonate resin intended for use in contact with food.

**FOR FURTHER INFORMATION CONTACT:** Patricia J. McLaughlin, Center for Food Safety and Applied Nutrition (formerly Bureau of Foods) (HFF–334), Food and Drug Administration, 200 C St. SW., Washington, DC 20204, 202–472–5690.

**SUPPLEMENTARY INFORMATION:** Under the Federal Food, Drug, and Cosmetic Act (sec. 409(b)(5), 72 Stat. 1786 (21 U.S.C. 348(b)(5))), notice is given that a petition (FAP 4B3787) has been filed by Dow Chemical Co., 1803 Building, Door 7, Midland, MI 48640, proposing that § 177.1580 *Polycarbonate resins* (21 CFR 177.1580) be amended to provide for the safe use of phenol as an optional adjuvant in polycarbonate resin intended for use in contact with food.

The potential environmental impact of this action is being reviewed. If the agency finds that an environmental impact statement is not required and this petition results in a regulation, the notice of availability of the agency's finding of no significant impact and the evidence supporting that finding will be published with the regulation in the Federal Register in accordance with 21 CFR 25.40(c) (proposed December 11, 1979; 44 FR 71742).

Dated: April 11, 1984.

Sanford A. Miller,

*Director, Center for Food Safety and Applied Nutrition.*

[FR Doc. 84-11196 Filed 4-25-84; 8:45 am]

BILLING CODE 4160-01-M

---

[Docket No. 84F-0085]

### M&T Chemicals, Inc.; Filing of Food Additive Petition

**AGENCY:** Food and Drug Administration.

**ACTION:** Notice.

**SUMMARY:** The Food and Drug Administration (FDA) is announcing that M&T Chemicals, Inc., has filed a petition proposing to amend the food additive regulations to provide for the safe use of didodecyl 1,4-dihydro-2,6-dimethyl-3,5-pyridinedicarboxylate as a stabilizer for polyvinyl chloride and/or vinyl chloride copolymers intended for use in contact with food.

**FOR FURTHER INFORMATION CONTACT:** Vir D. Anand, Center for Food Safety and Applied Nutrition (formerly Bureau of Foods) (HFF-334), Food and Drug Administration, 200 C St. SW., Washington, DC 20204, 202-472-5690.

**SUPPLEMENTARY INFORMATION:** Under the Federal Food, Drug, and Cosmetic Act (sec. 409(b)(5), 72 Stat. 1786 (21 U.S.C. 348(b)(5))), notice is given that a petition (FAP 4B3790) has been filed by M&T Chemicals, Inc., P.O. Box 1104, Rahway, NJ 07065, proposing that the food additive regulations be amended to provide for the safe use of didodecyl 1,4-dihydro-2,6-dimethyl-3,5-pyridinedicarboxylate as a stabilizer for polyvinyl chloride and/or vinyl chloride copolymers intended for use in contact with food.

The potential environmental impact of this action is being reviewed. If the agency finds that an environmental impact statement is not required and this petition results in a regulation, the notice of availability of the agency's finding of no significant impact and the evidence supporting that finding will be published with the regulation in the Federal Register in accordance with 21 CFR 25.40(c) (proposed December 11, 1979; 44 FR 71742).

Dated: April 11, 1984.

Sanford A. Miller,

*Center for Food Safety and Applied Nutrition.*

[FR Doc. 84-11196 Filed 4-25-84; 8:45 am]

BILLING CODE 4160-01-M

---

[Docket No. 84F-0049]

## E.I. duPont de Nemours & Co.; Filing of Food Additive Petition

**AGENCY:** Food and Drug Administration.

**ACTION:** Notice.

**SUMMARY:** The Food and Drug Administration (FDA) is announcing that E.I. DuPont de Nemours & Co. has filed a petition proposing to amend the food additive regulations to provide for the safe use of hydrogen peroxide for sterilizing food-contact surfaces prepared from ionomeric resins complying with 21 CFR 177.1330, ethylene-vinyl acetate copolymers complying with 21 CFR 177.1350, and certain polyethylene phthalate polymers complying with 21 CFR 177.1630, and to amend 21 CFR 177.1330 to provide for the use of the potassium partial salt of the ionomeric resins.

**FOR FURTHER INFORMATION CONTACT:** Vir D. Anand, Center for Food Safety and Applied Nutrition (formerly Bureau of Foods) (HFF-334), Food and Drug Administration, 200 C St. SW., Washington, DC 20204, 202-472-5690.

**SUPPLEMENTARY INFORMATION:** Under the Federal Food, Drug, and Cosmetic Act (sec. 409(b)(5), 72 Stat. 1786 (21 U.S.C. 348(b)(5))), notice is given that a petition (FAP 4B3783) has been filed by E.I. duPont de Nemours & Co., 1007 Market St., Wilmington, DE 19898, Proposing that the food additive regulations be amended in 21 CFR 178.1005 to provide for the safe use of hydrogen peroxide for sterilizing food-contact surfaces prepared from ionomeric resins complying with 21 CFR 177.1330, ethylene-vinyl acetate copolymers complying with 21 CFR 177.1350, and certain polyethylene phthalate polymers complying with 21 CFR 177.1630, and to amend 21 CFR 177.1330 to provide for the use of the potassium partial salt of the ionomeric resins in addition to the ammonium, calcium, magnesium, sodium, and/or zinc partial salts.

The potential environmental impact of this action is being reviewed. If the agency finds that an environmental impact statement is not required and this petition results in a regulation, the notice of availability of the agency's finding of no significant impact and the evidence supporting that finding will be published with the regulation in the Federal Register in accordance with 21 CFR 25.40(c) (proposed December 11, 1979; 44 FR 71742).

Dated: April 11, 1984.

Sanford A. Miller,

*Director, Center for Food Safety and Applied Nutrition.*

[FR Doc. 84-11191 Filed 4-25-84; 8:45 am]

BILLING CODE 4160-01-M

---

[Docket No. 83F-0409]

## Economics Laboratory, Inc.; Filing of Food Additive Petition

**AGENCY:** Food and Drug Administration.

**ACTION:** Notice.

**SUMMARY:** The Food and Drug Administration (FDA) is announcing that Economics Laboratory, Inc., has filed a petition proposing that the food additive regulations be amended to provide for the safe use of sodium mono- and dimethyl naphthalene sulfonates in sanitizing solutions for use on food-contact surfaces.

**FOR FURTHER INFORMATION CONTACT:** Blondell Anderson, Center for Food Safety and Applied Nutrition (formerly Bureau of Foods) (HFF-334), Food and Drug Administration, 200 C St. SW., Washington, DC 20204, 202-472-5740.

**SUPPLEMENTARY INFORMATION:** Under the Federal Food, Drug, and Cosmetic Act (sec. 409(b)(5), 72 Stat. 1786 (21 U.S.C. 348(b)(5))), notice is given that a petition (FAP 3H3756) has been filed by Economics Laboratory, Inc., Osborn Bldg., St. Paul MN 55102, proposing that § 178.1010 *Sanitizing solutions* (21 CFR 178.1010) be amended in paragraphs (b)(27) and (c)(22) to provide for the safe use of sodium mono- and dimethyl naphthalene sulfonates in sanitizing solutions for use on food-contact surfaces.

The potential environmental impact of this action is being reviewed. If the agency finds that an environmental impact statement is not required and this petition results in a regulation, the notice of availability of the agency's finding of no significant impact and the evidence supporting that finding will be published with the regulation in the Federal Register in accordance with 21 CFR 25.40(c) (proposed December 11, 1979; 44 FR 71742).

Dated: April 11, 1984.

Sanford A. Miller,

*Director, Center for Food Safety and Applied Nutrition.*

[FR Doc. 84-11192 Filed 4-25-84; 8:45 am]

BILLING CODE 4160-01-M

---

[Docket No. 84F-0106]

## Sun Chemical Corp.; Filing of Food Additive Petition

**AGENCY:** Food and Drug Administration.

**ACTION:** Notice.

**SUMMARY:** The Food and Drug Administration (FDA) is announcing that Sun Chemical Corp. has filed a petition proposing that the food additive regulations be amended to provide for the safe use of ethanedial, polymer with tetrahydro-4-hydroxy-5-methyl-2(1*H*) pyrimidinone, propoxylated, as a starch insolubilizer for paper and paperboard which will contact aqueous and fatty food.

**FOR FURTHER INFORMATION CONTACT:** Andrew D. Laumbach, Center for Food Safety and Applied Nutrition (formerly Bureau of Foods) (HFF-334), Food and Drug Administration, 200 C St. SW., Washington, D.C. 20204, 202-472-5690.

**SUPPLEMENTARY INFORMATION:** Under the Federal Food, Drug, and Cosmetic Act (sec. 409(b)(5), 72 Stat. 1786 (21 U.S.C. 348(b)(5))), notice is given that a petition (FAP 4B3782) has been filed by Sun Chemical Corp., P.O. Box 70, Chester, SC 29706, proposing that § 176.170 *Components of paper and paperboard in contact with aqueous and fatty foods* (21 CFR 176.170) be amended to provide for the safe use of ethanedial, polymer with tetrahydro-4-hydroxy-5-methyl-2(1*H*) pyrimidinone, propoxylated, as a starch insolubilizer for paper and paperboard which will contact aqueous and fatty food.

The potential environmental impact of this action is being reviewed. If the agency finds that an environmental impact statement is not required and this petition results in a regulation, the notice of availability of the agency's finding of no significant impact and the evidence supporting that finding will be published with the regulation in the Federal Register in accordance with 21 CFR 25.40(c) (proposed December 11, 1979; 44 FR 71742).

Dated: April 11, 1984.

Sanford A. Miller,

*Director, Center for Food Safety and Applied Nutrition.*

[FR Doc. 84-11194 Filed 4-25-84; 8:45 am]

BILLING CODE 4160-01-M

## DEPARTMENT OF HOUSING AND URBAN DEVELOPMENT

### Office of the Secretary

[Docket No. N-84-1373; FR-1985]

### Proposed Field Reorganization; Transfer of Function; New York Regional Office

**AGENCY:** Department of Housing and Urban Development Region II—New York.

**ACTION:** Notice of proposed field reorganization.

**SUMMARY:** Region II is regionalizing the multifamily property disposition function from its Buffalo and Newark Offices to achieve economies in operation and to increase staff productivity.

This Notice includes a cost-benefit analysis to be published in the Federal Register as required by section 7(p) of the Department of Housing and Urban Development Act.

**FOR FURTHER INFORMATION CONTACT:** Mr. Leonard Feller, Director, Management & Budget Division, Office of Regional Administration, New York Regional Office, Department of Housing and Urban Development, 26 Federal Plaza, New York, N.Y. 10278, (212) 264-4078. (This is not a toll free number.)

### A. Introduction and Background

Region II of the Department of Housing and Urban Development is transferring a function from its Buffalo and Newark Offices to the New York Office. This is being done to achieve economies and more effectively utilize staff assigned to this function by increasing their productivity.

### B. Description of Proposed Changes

The multifamily property disposition function in the Buffalo and Newark Offices will be regionalized in the New York Regional Office. These functions are now performed by eleven employees in New York, four in Newark, and one in Buffalo, for a total of fifteen employees. When regionalized, the work will be accomplished by eleven employees, for a savings of 4 employees.

### C. Cost Benefit Analysis

The reorganization will result in an annual savings of $142,973 in personnel costs. This will be offset by the one-time cost of $10,000 for the relocation of one employee and an annual increase of travel costs of $1,800.

*1. Savings*

a. *Personnel savings.* Buffalo FTP positions will be reduced by one, Newark FTP positions will be reduced by five, and New York FTP positions will be increased by two; for a total reduction of four FTP positions, consisting of three GS-12 positions and one GS-11 position. The annual dollar savings amount to $142,973.

b. *Space.* There are no significant office space cost savings or increased space costs associated with this transfer of function.

*2. Additional costs*

a. *Relocation Costs.* There will be a one-time cost of about $10,000 to relocate one individual from Buffalo to New York.

b. *Travel Costs.* There will be additional travel costs for on-site visits to the project in Syracuse. Two visits are required monthly and each visit lasts for two days. The average cost is now $175 per visit and will rise to $250 per visit, for an additional net cost of $1,800 per year.

3. Dollar savings resulting from this reorganization on a 2-year basis

| | |
|---|---|
| a. Personnel savings | $285,946 |
| b. Relocation cost | (10,000) |
| c. Travel cost | (3,600) |
| Net savings on a 2-year basis | 272,346 |

*4. Impact on local economy*

The proposed reorganization will have no measurable impact on any single locality. Only one individual is being relocated from Buffalo to New York. Although five positions will be abolished in Newark, the individuals involved qualify for positions currently vacant in that Office.

*5. Impact on the quality of services*

The changes will have no impact on services to recipients. New York and Newark are separated only by a few miles. Buffalo currently has only one project in inventory, located in the Syracuse area. New York will provide the same on-site services (see 2b above) for that project. Telephones and mail are used for all other services to recipients.

Dated: April 18, 1984.

George M. Beaton,

*Acting Regional Administrator/Regional Housing Commissioner, Region II.*

[FR Doc. 84-11322 Filed 4-25-84; 8:45 am]

BILLING CODE 4210-32-M

[Docket No. D-84-745; FR-1967]

### Delegations of Authority; Region IV

**AGENCY:** Department of Housing and Urban Development.

**ACTION:** Delegations of Authority.

**SUMMARY:** In order to provide more effective monitoring of Urban Development Action Grant Program activities in Region IV, it has been determined that the authority to take corrective and remedial actions under 24 CFR 570.910, except for any action to adjust, reduce, or withdraw a grant, be redelegated to Field Office Managers.

**EFFECTIVE DATE:** March 7, 1984.

**FOR FURTHER INFORMATION CONTACT:** William T. Pavelchik, Senior Economic Development Specialist, Office of Community Planning and Development, Atlanta Regional Office, Department of Housing and Urban Development, Room 688, Richard B. Russell Federal Building, 75 Spring Street, S.W., Atlanta, Georgia 30303, 404-221-5139.

**SUPPLEMENTARY INFORMATION:** This redelegation of authroity is made pursuant to a redelegation of authority issued by the General Deputy Assistant Secretary for Community Planning and

Development on August 11, 1982, 47 FR 36293 (August 19, 1982).

*Authorities Delegated:* The Managers of the Birmingham, Columbia, Greensboro, Jackson, Jacksonville, Knoxville, and Louisville Offices are hereby delegated the authority to take all corrective and remedial actions under 24 CFR § 570.910 with respect to an Urban Development Action Grant, except the authority to adjust, reduce, or withdraw a grant.

Dated: March 7, 1984.

**Clifton G. Brown,**

*Regional Administrator—Regional Housing Commissioner, Region IV.*

[FR Doc. 84-11323 Filed 4-25-84; 8:45 am]

BILLING CODE 4210-32-M

---

[Docket No. N-84-1374]

## Submission of Proposed Information Collections to OMB

**AGENCY:** Office of Administration, HUD.

**ACTION:** Notice.

**SUMMARY:** The proposed information collection requirements described below have been submitted to the Office of Management and Budget (OMB) for review, as required by the Paperwork Reduction Act. The Deaprtment is soliciting public comments on the subject proposals.

**ADDRESS:** Interested persons are invited to submit comments regarding these proposals. Comments should refer to the proposal by name and should be sent to: Robert Neal, OMB Desk Officer, Office of Management and Budget, New Executive Office Building, Washington, D.C. 20503.

**FOR FURTHER INFORMATION CONTACT:** David S. Cristy, Acting Reports Management Officer, Department of Housing and Urban Development, 451 7th Street, S.W., Washington, D.C. 20410, telephone (202) 755-6374. This is not a toll-free number.

**SUPPLEMENTARY INFORMATION:** The Department has submitted the proposals described below for the collection of information to OMB for review, as required by the Paperwork Reduction Act (44 U.S.C. Chapter 35).

The Notice lists the following information: (1) The title of the information collection proposal; (2) the office of the agency to collect the informaion; (3) the agency form number, if applicable; (4) how frequently information submissions will be requied; (5) what members of the public will be affected by the proposal; (6) an estimate of the total number of hours needed to prepare the information submission; (7) whether the proposal is new or an extension or reinstatement of an information collection requirement; and (8) the names and telephone numbers of an agency official familiar with the proposal and of the OMB Officer for the Department.

Copies of the proposed forms and other available documents submitted to OMB may be obtained from Davis S. Cristy, Acting Reports Management Officer for the Department. His address and telephone number are listed above. Comments regarding the proposals should be sent to the OMB Desk Officer at the address listed above.

The proposed information collection requirements are described as follows:

### Notice of Submission of Proposed Information Collection to OMB

Proposal: Rental Rehabilitation Program
Office: Community Planning and Development
Form Number: None
Frequency of Submission: On Occasion
Affected Public: State or Local Governments
Estimated Burden Hours: 32,504
Status: New
Contact: Frances Bush, HUD, (202) 755-5970, Robert Neal, OMB, (202) 395-7316

Authority: Sec. 3507 of the Paperwork Reduction Act, 44 U.S.C. 3507; Sec. 7(d) of the Department of Housing and Urban Development Act, 42 U.S.C. 3535(d).

Dated: April 5, 1984.

### Notice of Submission of Proposed Information Collection to OMB

Proposal: Section 8 Housing Assistance Payments Program—Application for Moderate Rehabilitation
Office: Housing
Form Number: HUD-52515A
Frequency of Submission: On Occasion
Affected Public: State or Local Governments
Estimated Burden Hours: 1,000
Status: New
Contact: Mary Proctor, HUD, (202) 755-5433, Robert Neal, OMB, (202) 395-7316

Authority: Sec. 3507 of the Paperwork Reduction Act, 44 U.S.C. 3507; Sec. 7(d) of the Department of Housing and Urban Development Act, 42 U.S.C. 3535(d).

Dated: April 5, 1984.

**Dennis F. Geer,**

*Director, Office of Information Policies and Systems.*

[FR Doc. 84-11319 Filed 4-25-84; 8:45 am]

BILLING CODE 4210-01-M

---

[Docket No. N-84-1375]

## Submission of Proposed Information Collection to OMB

**AGENCY:** Office of Administration, HUD.

**ACTION:** Notice.

**SUMMARY:** The proposed information collection requirement described below has been submitted to the Office of Management and Budget (OMB) for review, as required by the Paperwork Reduction Act. The Department is soliciting public comments on the subject proposal.

**ADDRESS:** Interested persons are invited to submit comments regarding this proposal. Comments should refer to the proposal by name and should be sent to: Robert Neal, OMB Desk Officer, Office of Management and Budget, New Executive Office Building, Washington, D.C. 20503.

**FOR FURTHER INFORMATION CONTACT:** David S. Cristy, Acting Reports Management Officer, Department of Housing and Urban Development, 451 7th Street, SW., Washington, D.C. 20410, telephone (202) 755-6374. This is not a toll-free number.

**SUPPLEMENTARY INFORMATION:** The Department has submitted the proposal described below for the collection of information to OMB for review, as required by the Paperwork Reduction Act (44 U.S.C. Chapter 35).

The Notice lists the following information: (1) The title of the information collection proposal; (2) the office of the agency to collect the information; (3) the agency form number, if applicable; (4) how frequently information submissions will be required; (5) what members of the public will be affected by the proposal; (6) an estimate of the total number of hours needed to prepare the information submission; (7) whether the proposal is new or an extension or reinstatement of an information collection requirement; and (8) the names and telephone numbers of an agency official familiar with the proposal and of the OMB Desk Officer for the Department.

Copies of the proposed forms and other available documents submitted to OMB may be obtained from David S. Cristy, Acting Reports Management Officer for the Department. His address and telephone number are listed above. Comments regarding the proposal should be sent to the OMB Desk Officer at the address listed above.

The proposed information collection requirement is described as follows:

**Notice of Submission of Proposed Information Collection to OMB**

Proposal: Manufactured Housing Construction and Safety Standards Reporting Requirements
Office: Housing
Form Number: None
Frequency of Submission: On Occasion
Affected Public: State or Local Governments and Businesses or Other For-Profit
Estimated Burden Hours: 174,308
Status: Extension
Contact: Richard Mendlen, HUD, (202) 755-5798, Robert Neal, OMB, (202) 395-7316.

Authority: Sec. 3507 of the Paperwork Reduction Act, 44 U.S.C. 3507; Sec. 7(d) of the Department of Housing and Urban Development Act, 42 U.S.C. 3535(d).

Dated: March 30, 1984.

Dennis F. Geer,

*Director, Office of Information Policies and Systems.*

[FR Doc. 84-11320 Filed 4-25-84; 8:45 am]

BILLING CODE 4210-01-M

---

[Docket No. N-84-1376]

## Submission of Proposed Information Collection to OMB

**AGENCY:** Office of Administration, HUD.

**ACTION:** Notice.

**SUMMARY:** The proposed information collection requirement described below has been submitted to the Office of Management and Budget (OMB) for review, as required by the Paperwork Reduction Act. The Department is soliciting public comments on the subject proposal.

**ADDRESS:** Interested persons are invited to submit comments regarding this proposal. Comments should refer to the proposal by name and should be sent to: Robert Neal, OMB Desk Officer, Office of Management and Budget, New Executive Office Building, Washington, D.C. 20503.

**FOR FURTHER INFORMATION CONTACT:** David S. Cristy, Acting Reports Management Officer, Department of Housing and Urban Development, 451 7th Street, S.W., Washington, D.C. 20410, telephone (202) 755-6374. This is not a toll-free number.

**SUPPLEMENTARY INFORMATION:** The Department has submitted the proposal described below for the collection of information to OMB for review, as required by the Paperwork Reduction Act (44 U.S.C. Chapter 35).

The Notice lists the following information: (1) The title of the information collection proposal; (2) the office of the agency to collect the information; (3) the agency form number, if applicable; (4) how frequently information submissions will be required; (5) what members of the public will be affected by the proposal; (6) an estimate of the total number of hours needed to prepare the information submission; (7) whether the proposal is new or an extension or reinstatement of an information collection requirement; and (8) the names and telephone numbers of an agency official familiar with the proposal and of the OMB Desk Officer for the Department.

Copies of the proposed forms and other available documents submitted to OMB may be obtained from David S. Cristy, Acting Reports Management Officer for the Department. His address and telephone number are listed above. Comments regarding the proposal should be sent to the OMB Desk Officer at the address listed above.

The proposed information collection requirement is described as follows:

**Notice of Submission of Proposed Information Collection to OMB**

Proposal: Single Family Mortgage Insurance Premium Remittance Summary
Office: Administration
Form Number: None
Frequency of Submission: Monthly
Affected Public: Businesses or Other For-Profit and Small Businesses or Organizations
Estimated Burden Hours: 60,000
Status: Reinstatement
Contact: Curtis D. Myron, HUD, (202) 755-5816, Robert Neal, OMB, (202) 395-7316.

Authority: Sec. 3507 of the Paperwork Reduction Act, 44 U.S.C. 3507; Sec. 7(d) of the Department of Housing and Urban Development Act, 42 U.S.C. 3535(d).

Dated: April 10, 1984.

Dennis F. Geer,

*Director, Office of Information Policies and Systems.*

[FR Doc. 84-11321 Filed 4-25-84; 8:45 am]

BILLING CODE 4210-01-M

---

# DEPARTMENT OF THE INTERIOR

## Bureau of Land Management

## Albuquerque District Advisory Council; Meeting

**AGENCY:** Bureau of Land Management, Interior.

**ACTION:** District Advisory Council meeting.

**SUMMARY:** The BLM Albuquerque District Advisory Council will meet June 5-6, 1984, in the Los Vaqueros meeting room of the Sagebrush Inn, Taos Road, Taos, New Mexico beginning at 9 a.m. both days. The meeting on the second day, June 6, will consist of a white-water rafting tour through the BLM-managed Rio Grande Wild and Scenic River, arranged for Council members and BLM staff only. Public comments will be received by the Council June 5, at 1:30 p.m.

Emphasis of the meeting will be selection of topics on which the Advisory Council will focus. Other agenda items will include: presentations on the new BLM land use planning process; status of the Taos Resource Management Plan and the Rio Puerco Resource Management Plan; and BLM's river management plan.

The public is invited to attend all portions of the meeting, although equipment for the river rafting tour has been arranged for Council members only. This council is managed in accordance with the Federal Advisory Committee Act of 1972, the Federal Land Policy and Management Act of 1976, and the Rangeland Improvement Act of 1976. Minutes of the meeting will be made available for review within 30 days following the meeting.

Michael F. Reitz,

*Acting District Manager.*

[FR Doc. 84-11254 Filed 4-25-84; 8:45 am]

BILLING CODE 4310-FB-M

---

## Public Land Sale; Competitive and Modified Competitive Sales of Public Land in Bonneville County, Idaho

**AGENCY:** Bureau of Land Management (BLM), Interior.

**ACTION:** Notice of reality action.

**SUMMARY:** Based on public support land use plans, the following lands have been examined and identified for disposal under Section 203(a) of the Federal Land Policy and Management Act of 1976, for no less than the appraised fair market value. The following tracts will be offered as competitive sales:

| Tract | Legal description | Acres |
|---|---|---|
| I-19735 | T. 1 N. R. 43 E., B.M., Sec. 1, lots 69, 70 | 2.5 |
| I-20357 | Lot 55 | 1.25 |
| I-20358 | Lots 66 and 73 | 2.5 |
| I-20359 | Lot 58 | 1.25 |
| I-20361 | Lots 48, 49, 50, 51, 61 | 6.25 |
| I-20363 | Lot 30 | 1.25 |
| I-20362 | Lots 43, 44, 45, 46 | 5. |
| I-19736 | T. 1 N. R. 44 E., B.M., Sec. 17: S½NW¼SE¼SE¼ | 5 |
| I-20366 | Sec. 17: W½SE¼NE¼SE¼SE¼, E½SW¼SE¼SE¼ | 2.5 |
| I-20367 | Sec. 17: W½SE¼SE¼SE¼ | 5. |

| Tract | Legal description | Acres |
|---|---|---|
| I-20368 | Sec. 17: E½NW¼SW¼SE¼SE¼, E½SW¼ SW¼SE¼SE¼, NE¼SW¼SE¼SE¼, SE¼SW¼S E¼SE¼ | 7.5 |
| I-20369 | Sec. 17: W½SW¼SW¼SE¼SE¼ | 1.25 |

The following tracts will be offered as modified competitive sales allowing the grazing lessee the right to meet the highest bid:

| | | |
|---|---|---|
| I-20360 | T. 1 N. R: 43 E., B.M., Sec. 1: Lots 84, 85, 86, 87, 93, 96 | 7.5 |
| I-20364 | Lot 9 | 1.25 |
| I-20365 | Lot 10 | 1.25 |
| I-20628 | T. 1 N., R. 44 E., B.M., Sec. 17: NE¼NE¼SE¼SW¼, E½NW¼N E¼SW¼SE¼ | 3.75 |

The appraisals will be available at the Idaho Falls District Office after June 15, 1984.

Sealed bids only are solicited for each tract offered. Acceptable bids must meet the FMV or higher and include a deposit of one-fifth of the full bid price. In addition, a bid will constitute an application for conveyance of non-leasable minerals of no known mineral value. The declared high bidder will be required to deposit a $50 nonrefundable filing fee in addition to the bid, in order to process the conveyance. Failure to do so will result in disqualification as high bidder.

The lands will be subject to the following reservations and conditions when patented:

1. Right-of-way reservation to the United States for ditches and canals (43 U.S.C. 945).

2. All leasable minerals.

3. All valid existing rights and reservations of record.

4. For tracts identified by serial numbers I-20357, I-20358, I-20359, I-20360, I-20361, I-20362, I-20363, I-20364 and I-20365, the following reservation will be added: "Pursuant to the authority contained in Sec. 3(d) of E.O. 11988 of May 24, 1977 and Sec. 203(a) of the Federal Land Policy and Management Act of 1976, this patent is subject to a restriction which constitutes a covenant running with the land, that the portion of the land lying within the 100-year floodplain may be used only for agricultural purposes or park and nonintensive open recreation purposes."

5. For the tract identified for serial number I-19735, the following reservation will be added: "Building on these lands must be to the requirements of the Idaho State Department of Health and Welfare, Bonneville County and the City of Swan Valley. Building foundations shall be built above the base level of the floodplain (State Highway 26). All structures shall be elevated using open walks, e.g. columns, walls, piles, piers, etc. rather than the use of fill."

Publication of this Notice will segregate the subject lands from all appropriation under the public land laws, including the mining laws excepting the mineral leasing law. This segregation will terminate upon issuance of patent or two years from the date of this Notice or upon publication of Notice of Termination by the authorized officer.

These parcels will be sold as described by the Government Land Office Surveys of 1898 (Irwin tracts) and 1958 (Swan Valley tracts).

This Notice of Realty Action will allow for a 45 day comment period for the planning document addressing the sale of the above described tracts. This document is entitled "Planning Analysis and Land Report for Public Land Tracts in Bonneville County, Idaho." This document is currently being reviewed by the Governor's Office for consistency with State and local planning. It is available for review in the District Office. The subject lands will not be offered for sale until such time that the Governor's review is complete and any comments or protests are resolved.

Dates and Addresses: Bids should be submitted to the District Manager, Idaho Falls District, 940 Lincoln Road, Idaho Falls, ID 83401 by July 16, 1984. Bids will be opened on July 17, 1984, at 1 p.m. in the District Office. If no bids are received by this date, bids will be accepted until, and opened on, August 28, 1984, at 1 p.m. in the District Office.

For further information contact: Detailed information concerning reservations, conditions, terms, bidding procedures and other items should be obtained by contacting Scott Powers, Realty Specialist, or Diane Roberts, Legal Clerk at the District Office, or by calling 208-529-1020 during office hours.

Supplementary Information: For a period of 45 days from the date of this notice, interested parties may submit comments to the District Manager at the above address.

Dated: April 20, 1984.

O'dell A. Frandsen,

*District Manager.*

[FR Doc. 84-11255 Filed 4-25-84; 8:45 am]

BILLING CODE 4310-GG-M

---

[N-36759; N-36759-A]

## Nevada; Conveyance

Notice is hereby given that, pursuant to the Act of December 23, 1980, 94 Stat. 3381 and the Act of October 21, 1976 (90 Stat. 2757; 43 U.S.C. 1719), DLW Development has purchased and received a patent for the following public lands in Clark County, Nevada:

Mount Diablo Meridian, Nevada

T. 21 S., R. 61 E.,
Sec. 19, NW¼NW¼NE¼NW¼.
Containing 2.5 acres.

The purpose of this notice is to inform the public and interested State and local governmental officials of the conveyance.

Richard G. Morrison,

*Chief, Land and Minerals Operations.*

[FR Doc. 84-11252 Filed 4-25-84; 8:45 am]

BILLING CODE 4310-HC-M

---

## Proposed Continuation of Withdrawal, Nevada

April 13, 1984.

**AGENCY:** Bureau of Land Management, Interior.

**ACTION:** Notice.

**SUMMARY:** The Bureau of Reclamation proposes that a 17 acre withdrawal for the National Park Service Lake Mead Recreation Headquarters and Service Utility Sites continue for an additional 20 years. The lands will remain closed to surface entry and mining and mineral leasing.

**DATE:** Comments and requests for a public meeting should be received by July 25, 1984.

**ADDRESS:** Comments and meeting requests should be sent to: Chief, Branch of Lands and Minerals Operations, Bureau of Land Management, P.O. Box 12000, Reno, Nevada 89520.

**FOR FURTHER INFORMATION CONTACT:** Vienna Wolder, Nevada State Office, 702-784-5703.

**SUPPLEMENTARY INFORMATION:** The National Park Service proposes that the existing land withdrawal made by the Public Land Order 3035 of April 15, 1963, be continued for a period of 20 years pursuant to Section 204 of the Federal Land Policy and Management Act of 1976, 90 Stat. 2751; 43 U.S.C. 1714. The land is described as follows:

The area described contains 17.13 acres in Clark County.

The purpose of the withdrawal is to house the Lake Mead National Recreation Area Headquarters and Service Utility Sites.

The withdrawal segregates the land from operation of the public land laws generally, including the mining laws and the mineral leasing laws. No change is proposed in the purpose or segregative effect of the withdrawal.

For a period of 90 days from the date of publication of this notice, all persons who wish to submit comments, suggestions, or objections in connection with the proposed withdrawal continuation may present their views in writing to the Chief, Branch of Lands and Minerals Operations, in the Nevada State Office.

Notice is hereby given that an opportunity for a public meeting is afforded in connection with the proposed withdrawal continuation. All interested persons who desire a public meeting for the purpose of being heard must submit a written request to the Chief, Branch of Lands and Minerals Operations, within 90 days from the date of publication of this notice. If the authorized officer determines that a public meeting will be held, a notice of the time and place will be published in the Federal Register at least 30 days before the scheduled date of the meeting.

The authorized officer of the Bureau of Land Management will undertake such investigations as are necessary to determine the existing and potential demand for the land and its resources. A report will also be prepared for consideration by the Secretary of the Interior, the President and Congress, who will determine whether or not the withdrawal will be continued and it so, for how long. The final determination on the continuation of the withdrawal will be published in the Federal Register. The existing withdrawal will continue until such final determination is made.

Wm. J. Malencik,

*Deputy State Director, Operations.*

[FR Doc. 84-11256 Filed 4-25-84; 8:45 am]

BILLING CODE 4310-HC-M

---

[NM 43559]

## New Mexico; Proposed Reinstatement of Terminated Oil and Gas Lease

Under the provisions of Pub. L. 97-451, Wrage Partnership petitioned for reinstatement of oil and gas lease NM 43559 covering the following described lands located in Lea County, New Mexico:

T. 23 S., R. 32 E., NMPM,
Sec. 33: SE¼NE¼.
Containing 40.00 acres.

It has been shown to my satisfaction that failure to make timely payment of rental was due to inadvertence.

No valid lease has been issued affecting the lands. Payment of back rentals and administrative cost of $500.00 has been paid. Future rentals shall be at the rate of $5.00 per acre per year and royalties shall be at the rate of 16⅔ percent. Reimbursement for cost of the publication of this notice shall be paid by the lessee.

Reinstatement of the lease will be effective as of the date of termination, October 3, 1983.

Dated: April 11, 1984.

Monte G. Jordan,

*Associate State Director.*

[FR Doc. 84-11269 Filed 4-25-84; 8:45 am]

BILLING CODE 4310-FB-M

---

[NM 26931—(Okla.)]

## New Mexico; Proposed Reinstatement of Expired Oil and Gas Lease

Under the provisions of Pub. L. 97-451, Kennedy & Mitchell, Inc., petitioned for reinstatement of oil and gas lease NM 26931—(Okla.) covering the following described lands located in Major County, Oklahoma:

T. 22 N., R. 12 W., I.M.,
Sec. 9: (Further described by metes and bounds description as shown in the case file).
Containing 5.31 acres more or less.

It has been shown to my satisfaction that failure to make timely payment of rental was due to inadvertence.

No valid lease has been issued affecting the lands. Payment of back rentals and administrative cost of $500.00 has been paid. Future rentals shall be at the rate of $10.00 per acre or fraction thereof per year and royalties shall be at the rate of 16⅔ percent, computed on a sliding scale four percentage points greater than the competitive royalty schedule attached to the lease. Reimbursement for cost of the publication of this notice shall be paid by the lessee.

Reinstatement of the lease will be effective as of the date of expiration, December 31, 1980.

Dated: April 16, 1984.

Alvin D. Pack,

*Acting State Director.*

[FR Doc. 84-11268 Filed 4-25-84; 8:45 am]

BILLING CODE 4310-FB-M

---

[ORE-011495]

## Oregon; Proposed Continuation of Withdrawal

**AGENCY:** Bureau of Land Management; Interior.

**ACTION:** Notice.

**SUMMARY:** The Bureau of Reclamation proposes that a 1,132.39 acre land withdrawal for the Rogue River Basin Project continue for an additional 20 years. The land(s) would remain closed to surface entry but would be partly open to mining. The land(s) have been and would remain open to mineral leasing.

**ADDRESS:** Comments should be sent to: Chief, Branch of Lands and Minerals Operations, Bureau of Land Management, P.O. Box 2965, Portland, Oregon 97208.

**FOR FURTHER INFORMATION CONTACT:** Champ C. Vaughan, Jr., Oregon State Office, 503-231-6905.

**SUPPLEMENTARY INFORMATION:** The Bureau of Reclamation proposes that the existing land withdrawal made by Public Land Order No. 4289 of October 5, 1967, be continued for a period of 20 years pursuant to Section 204 of the Federal Land Policy and Management Act of 1976, 90 Stat. 2751, 43 U.S.C. 1714.

The land(s) involved are located adjacent to Sucker Creek approximately four miles northwest of the Oregon Caves National Monument and aggregate 1,132.34 acres partly within the Siskiyou National Forest, Josephine County, Oregon.

The purpose of the withdrawal is to protect the proposed Sucker Creek Reservoir Site, Rogue River Basin Reclamation Project. The withdrawal segregates the land(s) from operation of the public land laws generally, including the mining laws, but not the mineral leasing laws. No change is proposed in the purpose of the withdrawal; however, action is pending to open most of the lands to mining pursuant to the Act of April 23, 1932 (47 Stat. 136; 43 U.S.C. 154).

For a period of 90 days from the date of publication of this notice, all persons who wish to submit comments, suggestions, or objections in connection with the proposed withdrawal continuation may present their views in writing to the undersigned officer at the address specified above.

The authorized officer of the Bureau of Land Management will undertake such investigations as are necessary to determine the existing and potential demand for the land and its resources. A report will also be prepared for consideration by the Secretary of the Interior, the President and Congress, who will determine whether or not the withdrawal will be continued and if so, for how long. The final determination on the continuation of the withdrawal will be published in the Federal Register. The existing withdrawal will continue until such final determination is made.

Dated: April 19, 1984.

Harold A. Berends,

*Chief, Branch of Lands and Minerals Operations.*

[FR Doc. 84-11257 Filed 4-25-84; 8:45 am]

BILLING CODE 4310-33-M

---

[OR-36619-B (Wa)]

## Washington; Conveyance

Notice is hereby given that, pursuant to Section 203 of the Act of October 21, 1976 (90 Stat. 2743, 2750; 43 U.S.C. 1701, 1713), the following described public land in Chelan County, was purchased by competitive sale and conveyed to the parties shown:

Mr. and Mrs. Carl E. Morrison, Route 1, Box 185, Manson, WA 98831

Willamette Meridian, Washington

T. 28 N., R. 21 E.,
Sec. 24, SW¼NE¼.

The purpose of this Notice is to inform the public and interested State and local governmental officials of the issuance of the conveyance document to Mr. & Mrs. Morrison.

Dated: April 17, 1984.

Harold A. Berends,

*Chief, Branch of Lands and Minerals Operations.*

[FR Doc. 84-11253 Filed 4-25-84; 8:45 am]

BILLING CODE 4310-33-M

---

## North Fork Well, Park County Worland BLM District, Wyoming; Extension of Public Comment Period

**AGENCY:** Bureau of Land Management, Interior.

**ACTION:** Additional extension of the public comment period on the proposed North Fork Well, Park County, Wyoming, draft environmental impact statement.

**SUMMARY:** This notice extends the public comment period on the proposed North Fork Well, Draft Environmental Impact Statement (DEIS), by an additional 15 days. The final date for receiving comments to be considered in the Final Environmental Impact Statement has been changed from May 1, 1984, to May 16, 1984. The new deadline represents a 30-day extension from the original deadline of April 16, 1984. Comments regarding adequacy of the DEIS should be addressed to: John Thompson, Bureau of Land Management, P.O. Box 119, Worland, Wyoming 82401. Telephone (307) 347-6151.

Roger D. Inman,

*Acting District Manager.*

[FR Doc. 84-11199 Filed 4-25-84; 8:45 am]

BILLING CODE 4310-22-M

---

## Fish and Wildlife Service

## Availability of Revised Draft Environmental Impact Statement for the Bristol Bay Cooperative Management Plan, Alaska

**AGENCY:** Fish and Wildlife Service, Interior.

**ACTION:** Notice.

**SUMMARY:** As required by Section 1203 of the Alaska National Interest Lands Conservation Act (ANILCA), a draft management plan and environmental impact statement (BBCMP/EIS) for the Bristol Bay region of southwestern Alaska (approximately 31 million acres), was developed through the cooperative efforts of the State of Alaska, the Department of the Interior, and local and regional representatives of the Bristol Bay region. The draft BBCMP/EIS, made available for public review and comment July 28, 1983, evaluated five land use alternatives ranging from development-oriented to preservation-oriented. In response to public comments received on the draft BBCMP/EIS, a sixth alternative has been developed and evaluated which not represents the proposed action. This proposed plan is designed to conserve and protect the significant fish, wildlife and cultrual resources of the Bristol Bay region while allowing for moderate economic growth and development. In general, oil and gas leasing may occur in certain upland areas, and in selected tide and submerged lands after a ten year moratorium; new mineral entry may be prohibited in portions of 64 designated anadromous fish streams; and 14,000 acres of state land may be made available for remote settlement. This notice informs the public that a revised draft EIS is available, provides information about how to obtain a copy of the document and about associated public meetings.

**DATES:** Written comments must be received by June 15, 1984. By Federal Register notice dated April 17, 1984 (49 FR 15143), advanced notice of public meetings was provided. Since that notice, changes have occurred and two additional meetings have been scheduled. The corrected meeting schedule is:

May 18, Naknet, Borough Assembly Hall, 7:30 p.m.

May 19, Dillingham, Senior Citizens Center, 7:30 p.m.

May 21, Sand Point, City Hall, 7:30 p.m.

May 22, Anchorage, U.S. Fish and Wildlife Service Regional Office, First Floor Conference Room, 1011 E. Tudor Rd., 7:30 p.m.

**ADDRESSES:** Written comments should be addresed to either: Richard Mylius, BBCMP Alaska Department of Natural Resources, Pouch 7-005, Anchorage, Alaska 99501; or Nancy Stromsen, BBCMP, U.S. Fish and Wildlife Service, 1011 East Tudor Road, Anchorage, Alaska 99503.

**FOR FURTHER INFORMATION CONTACT:** Nancy Stromsen, BBCMP, U.S. Fish and Wildlife Service, 1011 East Tudor Road, Anchorage, Alaska 99503, (907-786-3355). Individuals wanting copies of the EIS or further information concerning the public meetings should contact Ms. Stromsem. Copies of the revised BBCMP/EIS are being sent to all those agencies and individuals who commented on the draft and to all others who have already requested copies.

**SUPPLEMENTARY INFORMATION:** In accordance with the provisions of Section 1203 of ANILCA, under the direction of the Alaska Land Use Council (ALUC) the Bristol Bay Cooperative Management Plan (BBCMP) has been developed jointly by the U.S. Fish and Wildlife Service, Alaska Department of Natural Resources, Alaska Department of Fish and Game, U.S. Bureau of Land Management, Bristol Bay Borough, Aleutians East Coastal Resource Service Area, Bristol Bay Coastal Resource Service Area, and Native interests. The Fish and Wildlife Service and Alaska Department of Natural Resources shared co-lead in plan development. The Fish and Wildlife Service, responsible for complying with the National Environmental Policy Act of 1969, prepared a draft environmental impact statement (EIS) as part of the BBCMP to evaluate the impacts of the plan's alternatives. This draft EIS was made available for public review and comment on July 28, 1983. Based on comments received from the public and industry during the comment period, the plan and EIS have been revised, and the BBCMP/EIS now contains six alternatives for development in the Bristol Bay region. The revised draft EIS is being distributed to allow public review and comment on the significant changes in the draft plan.

The proposed plan designates fish and wildlife habitat and harvest as primary uses in the Bristol Bay area. It recommends balance by providing for resource development without

precluding environmental protection. Various elements of the revised plan are discussed briefly below. Major planning elements include oil and gas activity, mineral development, remote land disposal, and transportation corridors.

The state would not schedule oil or gas lease sales on tidelands from Quinhagak to Cape Menshikof, or in major bays, estuaries and lagoons south of Cape Menshikof. Leasing in the remaining state tidelands along the north side of the peninsula would be subject to a ten year moratorium. It would allow oil and gas leasing in the state's Black Hills caribou calving ground of the peninsula. State lease sales on uplands between the Kvichak River and Port Heiden, and between Port Heiden and Cape Lieskof would proceed as scheduled. Should any transportation facilities eventually be needed on the Alaska Peninsula, three trans-peninsula corridor routes are suggested and evaluated. A road from King Cove to Cold Bay is also proposed.

The majority of state and Bureau of Land Management lands are open to mineral entry by the proposal; however, portions of 64 designated anadromous fish streams would be closed to new mineral entry. The Alaska Department of Natural Resources may make available 14,000 acres of state land for remote settlement, primarily in the Dillingham and Iliamna Lake areas. Local small-scale energy systems would be allowed under the proposed plan, and the Alaska Power Authority would be encouraged to continue its studies of the economic feasibility and environmental impacts of regional systems. The revised plan also proposes to discourage large-scale agriculture, grazing, and timber operations on public lands.

To ensure that economic development in the Bristol Bay region will occur in an environmentally sound manner, thus conserving the region's outstanding commercial salmon fishery and natural resources, the proposal recommends implementation of management guidelines to govern certain types of activities in site-specific locations, closure of environmentally sensitive, areas, and other restrictions.

The proposal is estimated to result in minor impacts on caribou, moose and marine mammals. Impacts on populations of salmon, waterfowl, and brown bear would be moderate. The commercial fishery could experience some minor impacts.

There also could be moderate adverse impacts on cultural resources and subsistence in certain areas in the region. Increases in residents employment and permanent regional population would be minor. Water quality impacts would be minor, region-wide.

The No Plan (no action) Alternative reflects probable growth and development in the Bristol Bay region in the absence of a single, cooperatively developed plan. Four other alternatives to the proposal are also evaluated in the revised BBCMP/EIS.

Alternative One, the preferred alternative that was discussed in the original draft EIS, would allow most state tidelands along the north shore of the Alaska Peninsula to be placed on the state's 5-year leasing schedule. However, it would close the Black Hills caribou calving grounds to oil and gas leasing. It would also close active channels of all designated anadromous fish streams and their tributaries to new mineral entry.

Alternative Two provides maximum fish and wildlife population and habitat protection by restricting many opportunities for development, such as allowing oil and gas exploration and development in certain upland areas only.

Alternative Three allows an increase in the level of development activity for mineral entry, oil and gas leasing and remote settlement.

Alternative Four provides for even greater economic growth and diversity through wider opportunities for mineral development, settlement, and oil and gas exploration and development.

The Bristol Bay Cooperative Management Plan and EIS have undergone extensive public involvement in their development. The Notice of Intent to prepare the draft EIS was published in the Federal Register on October 29, 1981 (46 FR 53528). As part of the scoping process, letters were sent to each mayor, village council, an village corporation president in the Bristol Bay region. In addition, letters were sent to all other parties that could be identified as having an interest in the plan. This public information program was further expanded through radio announcements, newspaper advertisements, and a half-hour TV program on the statewide satellite system. Following the media announcements, a series of public meetings were held in 17 Alaskan communities from November 1981 through January 1982. During the early planning period, working groups were established and consultation with various experts was undertaken to confirm and correct information on the Bristol Bay region. Thirty public meetings were held between January 1983 and April 1983 to explain the plan alternatives and to provide the study group guidance in selecting a preferred alternative.

Following release of the draft plan and EIS in July 1983, 33 more public meetings and two public hearings were held. Over 200 written comments on the draft were received and considered. As a result, significant changes to the original plan were deemed necessary by State and Federal officials, and are reflected in the revised plan and EIS.

Interested agencies and individuals are urged to provide additional comments and suggestions on this revised draft EIS as soon as possible. All comments postmarked by the closing date identified above will be considered in preparing the final environmental impact statement.

Bruce Blanchard,

*Director, Office of Environmental Project Review.*

Robert A. Jantzen,

*Director, Fish and Wildlife Service.*

[FR Doc. 84-11246 Filed 4-25-84; 8:45 am]
BILLING CODE 4310-55-M

---

## Minerals Management Service

## Environmental Documents Prepared for Proposed Oil and Gas Operations on the Alaska Outer Continental Shelf

**ACTION:** Notice of availability of environmental documents prepared for Outer Continental Shelf (OCS) mineral prelease and exploration proposals on the Alaska OCS.

**SUMMARY:** The Minerals Management Service (MMS), in accordance with Federal regulations (40 CFR 1501.4 and 1506.6) that implement the National Environmental Policy Act (NEPA), announces the availability of NEPA-related environmental assessments (EA's) and findings of no significant impact (FONSI's) prepared by the MMS for the following oil and gas prelease and exploration activities proposed on the Alaska OCS. The listing includes all proposals for which environmental documents were prepared by the Alaska OCS Region in the 3-month period preceding this notice.

### Activity/Operator

Exploration Drilling Program (Sandpiper Island) for Beaufort Sea (Diapir Field); Shell Oil Company, as operator for itself and others.

### Location

Shell Oil Company is proposing to build a gravel island located within Lease OCS-Y 0370, situated about 5.2 miles north of the north end of Cottle

Island. From this island location, Shell proposes to drill up to four exploratory wells. The first well will be drilled into Lease OCS-Y 0370. Depending upon the results of drilling, testing, and evaluation of this well, subsequent wells may be drilled into other leases. The location of the gravel island is described as follows:

| Lease and Well No. | Location | Latitude/ longitude |
|---|---|---|
| OCS-Y 0370 No. 1 | 4,450' FNL 3,229' FEL | 70°35'4.740"N. |
| OCS-Y 0371 | | 149°5'48.804"W. |

**Environmental Assessment**

No. AK-84-01.

**FONSI Date**

January 19, 1984.

**Activity/Operator**

Exploration Drilling Program for Norton Basin; ARCO Alaska, Inc., as operator for itself.

**Location**

ARCO Alaska, Inc., proposes to drill up to 10 exploratory wells from a jack-up drilling rig at locations 28 or more miles offshore Norton Sound. Depending upon the results of drilling, testing, and evaluation of the initial well, subsequent wells may be drilled at other locations. Potential sites are described as follows:

| Lease | Location |
|---|---|
| OCS-Y: | |
| 0402 | SE Quarter. |
| 0403 | SW Quarter. |
| 0412 | NE Quarter. |
| 0417 | SW Quarter. |
| 0423 | NE Quarter. |
| 0435 | NW Quarter. |
| 0436 | NE Quarter. |
| 0436, No. 1 | SE Quarter. |
| 0438 | NE Quarter. |
| 0439 | SE Quarter. |

**Environmental Assessment**

No. AK-84-02.

**FONSI Date**

March 19, 1984.

**SUPPLEMENTARY INFORMATION:** The MMS prepares EA's and FONSI's for proposals which relate to exploration for oil and gas resources on the Alaska OCS.

The EA's examine the potential environmental effects of activities described in the proposals and present MMS conclusions regarding the significance of those effects. EA's are used as a basis for determining whether or not approval of the proposal constitutes major Federal actions that significantly affect the quality of the human environment in the sense of NEPA section 102(2)(C). A FONSI is prepared in those instances where the MMS finds that approval will not result in significant effects on the quality of the human environment. The FONSI briefly presents the basis for that finding and includes a summary or copy of the EA.

The FONSI and associated EA for the activities listed above are available for public inspection between the hours of 8 a.m. and 4 p.m., Monday through Friday (excluding lunch hour, 11:30 a.m. to 12:30 p.m.) at: Minerals Management Service, Alaska OCS Region, Office of the Regional Supervisor, Field Operations, 800 A Street, Suite 205, Anchorage, Alaska 99501, Phone: (907) 261-2255.

Persons interested in reviewing specific environmental documents or obtaining information about EA's and FONSI's prepared for activities on the Alasks OCS are encouraged to contact the above listed MMS office.

This notice constitutes the public notice of availability of environmental documents required under the NEPA regulations.

Alan D. Powers,

*Regional Manager.*

[FR Doc. 84-11202 Filed 4-25-84; 8:45 am]

BILLING CODE 4310-MR-M

## Outer Continental Shelf; Development Operations Coordination Document; Tenneco Oil Exploration

**AGENCY:** Minerals Management Service, Interior.

**ACTION:** Notice of the Receipt of a Proposed Development Operations Coordination Document (DOCD).

**SUMMARY:** Notice is hereby given that Tenneco Oil Exploration and Production has submitted a DOCD describing the activities it proposes to conduct on Lease OCS-G 3392, Block 50, Vermilion Area, offshore Louisiana. Proposed plans for the above area provide for the development and production of hydrocarbons with support activities to be conducted from an onshore base located at Intracoastal City, Louisiana.

**DATE:** The subject DOCD was deemed submitted on April 17, 1984.

**ADDRESS:** A copy of the subject DOCD is available for public review at the Office of the Regional Manager, Gulf of Mexico Region, Minerals Management Service, 3301 North Causeway Blvd., Room 147, Metairie, Louisiana (Office Hours: 9 a.m. to 3:30 p.m., Monday through Friday).

**FOR FURTHER INFORMATION CONTACT:** Emile H. Simoneaux, Jr., Minerals Management Service, Gulf of Mexico Region; Rules and Production; Plans, Platform and Pipeline Section, Exploration/Development Plans Unit; Phone (504) 838-0872.

**SUPPLEMENTARY INFORMATION:** The purpose of this Notice is to inform the public, pursuant to Sec. 25 of the OCS Lands Act Amendments of 1978, that the Minerals Management Service is considering approval of the DOCD and that it is available for public review.

Revised rules governing practices and procedures under which the Minerals Management Service makes information contained in DOCD's available to affected states, executives of affected local governments, and other interested parties became effective December 13, 1979 (44 FR 53685). Those practices and procedures are set out in revised § 250.34 of Title 30 of the CFR.

Dated: April 17, 1984.

John L. Rankin,

*Regional Manager, Gulf of Mexico Region.*

[FR Doc. 84-11258 Filed 4-25-84; 8:45 am]

BILLING CODE 4310-MR-M

## INTERSTATE COMMERCE COMMISSION

[Finance Docket No. 30446]

## Rail Carriers; Chicago and North Western Transportation Company; Abandonment Exemption; In Du Page County, IL

**AGENCY:** Interstate Commerce Commission.

**ACTION:** Notice of exemption.

**SUMMARY:** The Interstate Commerce Commission exempts from the requirements of 49 U.S.C. 10903 et seq., the abandonment by the Chicago and North Western Transportation Company (CNW) of its 2.0 mile line of railroad between milepost 18.4 near Villa Park and milepost 20.4 near Lombard, in Du Page County, IL, subject to employee protective conditions.

**DATES:** This exemption will be effective on May 28, 1984. Petitions to stay must be filed by May 7, 1984. Petitions for reconsideration must be filed by May 16, 1984.

**ADDRESSES:** Send pleadings referring to Finance Docket No. 30446 to:

(1) Office of the Secretary, Case Control Branch, Interstate Commerce Commission, Washington, D.C. 20423.

(2) Petitioner's representative: Robert T. Opal, One North Western Center, Chicago, IL 60606.

**FOR FURTHER INFORMATION CONTACT:** Louis E. Gitomer, (202) 275-7245.

**SUPPLEMENTARY INFORMATION:** Additional information is contained in the Commission's decision. To purchase a copy of the full decision, write to T. S. InforSystems, Inc., Room 2227, Interstate Commerce Commission, Washington, D.C. 20423, or call 289-4357 (D.C. Metropolitan area) or toll free (800) 424-5403.

Decided: April 18, 1984.

By the Commission, Chairman Taylor, Vice Chairman Andre, Commissioners Sterrett and Gradison. Commissioner Gradison did not participate.

James H. Bayne,

*Acting Secretary.*

[FR Doc. 84-11228 Filed 4-25-84; 8:45 am]

BILLING CODE 7035-01-M

---

[Finance Docket No. 30449]

## Rail Carriers; Consolidated Rail Corporation; Trackage Rights Exemption; Over Chesapeake and Ohio Railway Company; Exemption

April 19, 1984.

Consolidated Rail Corporation (Conrail) has filed a notice of exemption under 49 CFR 1180.4(g) to permit relocation of a line of railroad. The relocation will be accomplished by Conrail: (1) Acquiring trackage rights over a line of the Chesapeake and Ohio Railway Company (Chessie) in the city of Grand Rapids, MI, and (2) abandoning its own line connecting the same points as the Cheesie line. The abandonment will be the subject of a separate proceeding. The trackage rights agreement grants Conrail the right to operate in either direction over the following Chessie lines in Grand Rapids: beginning at Chessie's Valuation Station 8071+35+, near Butterworth Street, to Valuation Station 8200+75+, north of Ann Street, a distance of approximately 2.45 miles, including use of certain connections.

This joint project is a relocation of a line of railroad in cooperation with the city of Grand Rapids to revitalize its central business district. It does not disrupt service to shippers and is an exempt transaction pursuant to 49 CFR 1180.2(d)(5).

As a condition to use of this exemption, any employees affected by the trackage rights agreement shall be protected pursuant to *Norfolk and Western Ry. Co.—Trackage Rights—BN*, 354 I.C.C. 605 (1978), as modified by *Mendocino Coast Ry., Inc.—Lease and Operate*, 360 ICC 653 (1980).

By the Commission.

James H. Bayne,

*Acting Secretary.*

[FR Doc. 84-11227 Filed 4-25-84; 8:45 am]

BILLING CODE 7035-01-M

---

# DEPARTMENT OF JUSTICE

## Drug Enforcement Administration

### Importation of Controlled Substances; Application

Pursuant to section 1008 of the Controlled Substances Import and Export Act (21 U.S.C. 958(h)), the Attorney General shall, prior to issuing a registration under this section to a bulk manufacturer of a controlled substance in Schedule I or II and prior to issuing a regulation under section 1002(a) authorizing the importation of such a substance, provide manufacturers holding registrations for the bulk manufacture of the substance an opportunity for a hearing.

Therefore, in accordance with § 1311.42 of Title 21, Code of Federal Regulations (CFR), notice is hereby given that on January 31, 1984, Stepan Company, Natural Products Department, 100 West Hunter Avenue, Maywood, New Jersey 07607, made application to the Drug Enforcement Administration to be registered as an importer of Coca Leaves (9040), a basic class controlled substance in Schedule II.

As to the basic class of controlled substance listed above for which application for registration has been made, any other applicant therefor, and any existing bulk manufacturer registered therefor, may file written comments on or objections to the issuance of such registration and may, at the same time, file a written request for a hearing on such application in accordance with 21 CFR 1301.54 in such form as prescribed by 21 CFR 1316.47.

Any such comments, objections or requests for a hearing may be addressed to the Deputy Assistant Administrator, Drug Enforcement Administration, United States Department of Justice, 1405 I Street, NW., Washington, D.C. 20537, Attention: DEA Federal Register Representative (Room 1203), and must be filed no later than May 25, 1984.

This procedure is to be conducted simultaneously with and independent of the procedures described in 21 CFR 1311.42 (b), (c), (d), (e) and (f). As noted in a previous notice at 40 FR 43745-46 (September 23, 1975), all applicants for registration to import a basic class of any controlled substance in Schedule I or II are and will continue to be required to demonstrate to the Deputy Assistant Administrator of the Drug Enforcement Administration that the requirements for such registration pursuant to 21 U.S.C. 958(a), 21 U.S.C. 823(a), and 21 CFR 1311.42 (a), (b), (c), (d), (e) and (f) are satisfied.

Dated: April 19, 1984.

Gene R. Haislip,

*Deputy Assistant Administrator, Office of Diversion Control, Drug Enforcement Administration.*

[FR Doc. 84-11308 Filed 4-25-84; 8:45 am]

BILLING CODE 4410-09-M

---

### Manufacturer of Controlled Substances; Application

Pursuant to 1301.43(a) of Title 21 of the Code of Federal Regulations (CFR), this is notice that on January 31, 1984, Stepan Company, Natural Products Department, 100 West Hunter Avenue, Maywood, New Jersey 07607, made application to the Drug Enforcement Administration (DEA) for registration as a bulk manufacturer of the basic classes of controlled substances listed below:

| Drug | Schedule |
|---|---|
| Cocaine (9041) | II |
| Ecgonine (9180) | II |

Any other such applicant and any person who is presently registered with DEA to manufacture such substances, may file comments or objections to the issuance of the above application and may also file a written request for a hearing thereon in accordance with 21 CFR 1301.54 and in the form prescribed by 21 CFR 1316.47.

Any such comments, objections or requests for a hearing may be addressed to the Deputy Assistant Administrator, Drug Enforcement Administration, United States Department of Justice, 1405 I Street, NW., Washington, D.C. 20537, Attention: DEA Federal Register Representative (Room 1203), and must be filed no later than May 25, 1984.

Dated: April 19, 1984.

Gene R. Haislip,

*Deputy Assistant Administrator, Office of Diversion Control, Drug Enforcement Administration.*

[FR Doc. 84-11307 Filed 4-25-84; 8:45 am]

BILLING CODE 4410-09-M

---

### Manufacturer of Controlled Substances; Registration

By notice dated March 2, 1984, and published in the Federal Register on March 9, 1984 (49 FR 9033), Du Pont Pharmaceuticals, 1000 Stewart Avenue

Garden City, New York 11530, made application to the Drug Enforcement Administration to be registered as a bulk manufacturer of the basic classes of controlled substances listed below:

| Drug | Schedule |
|---|---|
| Oxycodone (9143) | II |
| Hydrocodone (9193) | II |
| Oxymorphone (9652) | II |

No comments or objections have been received. Therefore, pursuant to section 303 of the Comprehensive Drug Abuse Prevention and Control Act of 1970 and Title 21, Code of Federal Regulations, § 1301.54(e), the Deputy Assistant Administrator hereby orders that the application submitted by the above firm for registration as a bulk manufacturer of the basic classes of controlled substances listed above is granted.

Dated: April 19, 1984.

Gene R. Haislip,

*Deputy Assistant Administrator, Office of Diversion Control, Drug Enforcement Administration.*

[FR Doc. 84-11309 Filed 4-25-84; 8:45 am]

BILLING CODE 4410-09-M

## DEPARTMENT OF JUSTICE

### Office of Juvenile Justice and Delinquency Prevention

### Juvenile Justice and Delinquency Prevention National Advisory Committee; Meeting

The thirty-first quarterly meeting of the National Advisory Committee for Juvenile Justice and Delinquency Prevention will be held in Washington, D.C. on May 31, 1984.

The meeting will be held at the Georgetown Inn, Lafayette Room, 1310 Wisconsin Avenue, NW., beginning at 9:00 a.m. on May 31 and concluding no later than 6:00 p.m. The public is welcome to attend.

The agenda will include discussion and topics related to the redirection of the Federal effort in juvenile justice.

For further information, please contact Roberta Dorn, Office of Juvenile Justice and Delinquency Prevention, 633 Indiana Avenue, NW., Washington, D.C. 20531, (202) 724-7655.

Dated: April 19, 1984.

Alfred S. Regnery,

*Administrator, Office of Juvenile Justice and Delinquency Prevention.*

[FR Doc. 84-11238 Filed 4-25-84; 8:45 am]

BILLING CODE 4410-18-M

## NATIONAL AERONAUTICS AND SPACE ADMINISTRATION

[84-42]

### Intent To Grant an Option Agreement for an Exclusive Patent License; Bio-Imaging Research Inc.

**AGENCY:** National Aeronautics and Space Administration.

**ACTION:** Notice of intent to grant an option agreement for an exclusive patent license.

**SUMMARY:** NASA hereby gives notice of intent to grant an Option Agreement to Bio-Imaging Research Inc., of Northbrook, Illinois, for a limited, exclusive, royalty-bearing, revocable license to practice the invention described in U.S. Patent Application No. 350,477 for an Imaging X-Ray Spectrometer," filed February 19, 1982, by the Administrator of the National Aeronautics and Space Administration on behalf of the United States of America. The proposed option agreement will be for a limited period of time and will contain appropriate terms and conditions to be negotiated in accordance with the NASA Patent Licensing Regulations, 14 CFR Part 1245, Subpart 2. NASA will negotiate the final terms and conditions and grant the option agreement unless, within 60 days of the date of this Notice, the Director of Patent Licensing receives written objections to the grant, together with supporting documentation. The Director of Patent Licensing will review all written responses to the Notice and then recommend to the Assistant General Counsel for Patent Matters whether to grant the option agreement.

**DATE:** Comments to this notice must be received by June 25, 1984.

**ADDRESS:** National Aeronautics and Space Administration, Code GP Washington, D.C. 20546.

**FOR FURTHER INFORMATION CONTACT:** Mr. John G. Mannix, (202) 453-2430.

Dated: April 18, 1984.

John E. O'Brien,

*Deputy General Counsel.*

[FR Doc. 84-11175 Filed 4-25-84; 8:45 am]

BILLING CODE 7510-01-M

[84-43]

### Intent To Grant an Exclusive Patent License; Dr. James B. Laudenslager

**AGENCY:** National Aeronautics and Space Administration.

**ACTION:** Notice of intent to grant an exclusive patent license.

**SUMMARY:** NASA hereby gives notice of intent to grant to Dr. James B. Laudenslager of Sierra Madre, California, and Dr. Thomas J. Pacala of La Canada California, a limited, exclusive, royalty-bearing, revocable license to practice the invention described in U.S. Patent No. 4,275,317 for a "Pulse Switching for High Energy Lasers," which issued on June 23, 1981, to the Administrator of the National Aeronautics and Space Administration on behalf of the United States of America. The proposed exclusive license will be for a limited number of years and will contain appropriate terms and conditions to be negotiated in accordance with the NASA Patent Licensing Regulations, 14 CFR Part 1245, Subpart 2. NASA will negotiate the final terms and conditions and grant the exclusive license unless, within 60 days of the date of this Notice, the Director of Patent Licensing receives written objections to the grant, together with supporting documentations. The director of patent Licensing will review all written responses to the Notice and then recommend to the Assistant General Counsel for Patent Matters whether to grant the exclusive license.

**DATE:** Comments to this notice must be received by June 25, 1984.

**ADDRESS:** National Aeronautics and Space Administration, Code GP, Washington, D.C. 20546.

**FOR FURTHER INFORMATION CONTACT:** Mr. John G. Mannix, (202) 453-2430.

Dated: April 18, 1984.

John E. O'Brien

*Deputy General Counsel.*

[FR Doc. 84-11174 Filed 4-25-84; 8:45 am]

BILLING CODE 7510-01-M

## NUCLEAR REGULATORY COMMISSION

[Docket No. 50-317]

### Baltimore Gas and Electric Co.; Issuance of Amendment to Facility Operating License

The U.S. Nuclear Regulatory Commission (Commission) has issued Amendment No. 86 to Facility Operating License No. DPR-53, issued to Baltimore Gas and Electric Company (the licensee), which revised the Technical Specifications for operation of the Calvert Cliffs Nuclear Power Plant, Unit No. 1 (the facility), located in Calvert County, Maryland. The amendment was effective as of the date of its issuance, August 1, 1983.

The amendment provides revised Limiting Conditions for Operation and

Surveillance Requirements relating to Containment Tendons.

The application for the amendment complies with the standards and requirements of the Atomic Energy Act of 1954, as amended (the Act), and the Commission's rules and regulations. The Commission has made appropriate findings as required by the Act and the Commission's rules and regulations in 10 CFR Chapter I, which are set forth in the license amendment.

Notice of Consideration of Issuance of Amendment and Opportunity for Prior Hearing in connection with this action was published in the Federal Register on June 16, 1983, 48 FR 27620. No request for a hearing or petition for leave to intervene was filed following this notice.

The Commission has determined that the issuance of the amendment will not result in any significant environmental impact and that pursuant to 10 CFR § 51.5(d)(4) an environmental impact statement or negative declaration and environmental impact appraisal need not be prepared in connection with issuance of the amendment.

For further details with respect to the action see (1) the application for amendment dated March 7, 1983, as supplemented by letter dated May 24, 1983, (2) Amendment No. 86 to License No. DPR-53, and (3) the Commission's related Safety Evaluation. All of these items are available for public inspection at the Commission's Public Document Room, 1717 H Street NW., Washington, D.C. and at the Calvert County, Library, Price Frederick, Maryland. A copy of items (2) and (3) may be obtained upon request addressed to the U.S. Nuclear Regulatory Commission, Washington, D.C. 20555, Attention: Director, Division of Licensing.

Dated at Bethesda, Maryland this 19th day of April, 1984.

For the Nuclear Regulatory Commission.

James R. Miller,

*Chief, Operating Reactors Branch No. 3, Division of Licensing.*

[FR Doc. 84-11239 Filed 4-25-84; 8:45 am]

BILLING CODE 7590-01-M

---

[Docket Nos. 50-295 and 50-304]

## Commonwealth Edison Co. (Zion Nuclear Generating Station, Units 1 and 2); Exemption

I

Commonwealth Edison Company (the licensee) is holder of Facility Operating License Nos. DPR-39 and DPR-48 which authorize operation of the Zion Station, Unit Nos. 1 and 2 (the facilities) at power levels not in excess of 3250 megawatts thermal. The facilities are pressurized water reactors (PWRs) located at the licensee's site in Zion, Illinois. These licenses provide, among other things, that they are subject to all rules, regulations and Orders of the Commission now or hereafter in effect.

II

10 CFR 50.54(q) requires a licensee authorized to operate a nuclear power reactor to follow and maintain in effect emergency plans which meet the standards of 10 CFR Part 50.47(b) and the requirements of Appendix E to 10 CFR Part 50. Section IV.F.1 of Appendix E requires each licensee to conduct a full-scale emergency preparedness exercise at least annually, to include the full or small scale participation of State and local governments within the plume exposure pathway Emergency Planning Zone (EPZ).

By letter dated January 18, 1984, the licensee requested that an exemption be granted from the offsite government participation requirements of Section IV.F.1.a of Appendix E, for the April 17, 1984 exercise to be held at the Zion Nuclear Generating Station. The licensee bases this request for exemption on the previous successful participation of the Lake County, Illinoios, and Kenosha County, Wisconsin organizations in the January 1983 exercise at Zion and the successful participation of the State of Illinois and Wisconsin in the November 1983 exercises held at Byron Nuclear Power Station and Kewaunee Nuclear Power Plant, respectively. The licensee asserts that all major elements in the governmental emergency plans at Zion were performed satisfactorily in 1983, and that another exercise involving these agencies is not needed until 1985. In addition, the licensee points to a recent FEMA determination (FEMA Region V All-State letter, ASL 71-83, dated December 27, 1983) that the States of Illinois and Wisconsin and the Counties of Lake and Kenosha are eligible to exercise biennially.

The NRC staff has reviewed the 1983 exercises and the recent FEMA determination and agrees that a full-scale exercise involving State and local governments is not necessary. The staff determined that the agencies demonstrated a capability to respond effectively to nuclear power station emergency conditions. Moreover, the staff notes that the State of Illinois is fully participating at the Quad Cities Exercise in August 1984 and that the State of Wisconsin is fully participating at the LaCrosse exercise in June 1984.

Based on the above, the staff has concluded that non-participation by State and local government agencies in the April 17, 1984 emergency preparedness exercise for the Zion Nuclear Generating Station will not adversely affect the overall state of emergency preparedness at the Zion site and that the requested exemption from the requirements of 10 CFR 50, Appendix E, Section IV.F.1.a should be granted.

III

Accordingly, the Commission has determined that, pursuant to 10 CFR 50.12(a), the exemption requested by the licensee's letter of January 18, 1984, is authorized by law and will not endanger life or property or the common defense and security, and is otherwise in the public interest. The Commission hereby grants to the licensee an exemption from the requirements that State and local government agencies participate in the emergency preparedness exercise scheduled to be held at the Zion Nuclear Generating Station during April 1984.

The Commission has determined that the granting of this exemption will not result in any significant environmental impact and that pursuant to 10 CFR 51.5(d)(4) an environmental impact statement or negative declaration and environmental impact appraisal need not be prepared in connection with this action.

This Exemption is effective upon issuance.

Dated at Bethesda, Maryland this 16th day of April 1984.

For the Nuclear Regulatory Commission.

Darrell G. Eisenhut,

*Director, Division of Licensing.*

[FR Doc. 84-11290 Filed 4-25-84; 8:45 am]

BILLING CODE 7590-01-M

---

## Siting Guidelines for Nuclear Waste Repositories; Meeting

**AGENCY:** Nuclear Regulatory Commission.

**ACTION:** Notice of DOE/NRC Meeting on the DOE Siting Guidelines.

**SUMMARY:** The Nuclear Regulatory Commission (NRC), Division of Waste Management will continue its meetings with the Department of Energy (DOE), Office of Civilian Radioactive Waste Management.

**DATE:** May 3, 1984. The meeting will begin at 9:00 a.m.

**ADDRESS:** The meeting will be held at the Department of Energy, Forrestal

Building, Room 1E245, 1000 Independence Avenue, SW, Washington, D.C. 20585.

**FOR FURTHER INFORMATION CONTACT:** Regis Boyle, Section Leader, Regulations and Environmental Section, Repository Projects Branch, Division of Waste Management, U.S. Nuclear Regulatory Commission, Washington, D.C. 20555, Phone 301-427-4127 or FTS 427-4127.

**SUPPLEMENTARY INFORMATION:** The purpose of this meeting, which is open to the public as observers, is to resolve several issues concerning the *DOE General Guidelines for the Recommendation of Sites for Nuclear Waste Repositories.* These issues are set forth in the NRC's preliminary decision on the siting guidelines (49 FR 9650). The siting guidelines are required by Section 112(a) of the Nuclear Waste Policy Act of 1982 and require the concurrence of the NRC.

For information of future meeting, if any, please call DOE's Toll-free telephone information service at one of the following numbers.

For calls originating in Maryland—800-492-4610.

For calls originating in the other 49 states—800-368-2235.

Dated at Silver Spring, Maryland, this 19th day of April 1984.

For the Nuclear Regulatory Commission.

Michael J. Bell,

*Deputy Director Division of Waste Management, Office of Nuclear Material Safety and Safeguards.*

[FR Doc. 84-11295 Filed 4-25-84; 8:45 am]

BILLING CODE 7590-01-M

## OFFICE OF MANAGEMENT AND BUDGET

### Office of Federal Procurement Policy

### Issuance of Policy Letter No. 84-1, "Federally Funded Research and Development Centers (FFRDCs)"

*Correction*

In FR Doc. 84-9760 beginning on page 14462 in the issue of Wednesday, April 11, 1984, make the following correction:

On page 14464, first column, the heading "Study and Analysis Centers" should have been italicized as follows:

*Study and Analysis Centers*

BILLING CODE 1505-01-M

## OFFICE OF THE UNITED STATES TRADE REPRESENTATIVE

[Docket No. 301-45]

### The Motion Picture Export Association of America: Termination of Investigation Under Section 301

On January 30, 1984, the United States Trade Representative initiated an investigation under section 301 of the Trade Act of 1974 (19 U.S.C. 2411) based upon a petition submitted by the Motion Picture Export Association of America. The petitioner alleged that the Taiwan authorities unjustifiably and unreasonably reduced the number of film import licenses granted to MPEAA members that distribute films in Taiwan. The petitioner alleged that the reduced number of film import licenses burdened U.S. commerce by making it uneconomical for the MPEAA members to remain in the film distribution business in Taiwan.

On April 17, 1984, the petitioner withdrew its petition. The U.S. Trade Representative, therefore, has terminated the investigation as provided for in 15 CFR 2006.06.

Jeanne S. Archibald,

*Chairman, Section 301 Committee.*

[FR Doc. 84-11221 Filed 4-25-84; 8:45 am]

BILLING CODE 3190-01-M

## SECURITIES AND EXCHANGE COMMISSION

[Release No. 23286; 70-6976]

### Central and South West Corp. et al.; Proposed Transactions Related To Borrowing in the "Eurodollar" Market Through a Foreign Subsidiary; Exception From Competitive Bidding

April 19, 1984.

Central and South West Corporation ("CSW"), 2400 San Jacinto Tower, Dallas, Texas 75222, a registered holding company, and its electric utility subsidiary, Central Power and Light Company ("CPL"), 120 North Chaparral Street, Corpus Christi, Texas 78403, have filed an application-declaration with this Commission pursuant to Sections 6(a), 7, 9(a), 10, and 12(b) of the Public Utility Holding Company Act of 1935 ("Act") and Rules 45 and 50(a)(5) promulgated thereunder.

The application-declaration relates to: (i) The proposed organization under the laws of the Netherlands Antilles of a wholly owned subsidiary of CSW (the "Financing Subsidiary"), the principal function of which will be to borrow funds outside the United States of America in the "Eurodollar" market and to lend such funds to CSW, which in turn will lend funds to CPL and in the future to one or more of CSW's subsidiaries; (ii) CSW's proposed acquisition of shares of the Financing Subsidiary and/or making of capital contributions to the Financing Subsidiary, the aggregate amount of Financing Subsidiary to maintain a debt to equity ratio of not greater than 3.0 to 1; (iii) the Financing Subsidiary's investment of substantially all its equity capital in one or more subsidiaries or one or more financial instruments, with the objectives of assuring the preservation of its capital and optimizing the return on its investment and offsetting as nearly as practicable the financing cost to CSW of its investment in the Financing Subsidiary's equity capital; (iv) the Financing Subsidiary's proposed issuance and sale of up to $100 million of debentures in the Eurodollar market, CSW's guaranty of such debentures, the Financing Subsidiary's loan to CSW of the net proceeds from the sale of the debentures, and CSW's loan of such net proceeds to CPL and in the future to one or more of its subsidiaries; (v) the issuance and sale by CSW of unsecured term notes to the Financing Subsidiary to evidence borrowings by CSW of the net proceeds from the sale of the debentures and the issuance and sale of unsecured term notes by CPL (and in the future by other CSW subsidiaries) to CSW to evidence the borrowings by CPL of the net proceeds from CSW; and (vi) CSW's request for an exception from the competitive bidding requirements of Rule 50 with respect to the Financing subsidiary's issue and sale of the debentures mentioned above.

Organization of the Financing Subsidiary under the laws of the Netherlands Antilles is necessary for interest payments to the purchasers of the debentures to be free of all United States withholding taxes. CSW has been advised that debt securities may be issued in the Eurobond market, as a practical matter, only if they are in bearer form and are not subject to United States tax withholding. It is stated that at times in the past several years there have been cost savings available to electric utilities in the Eurobond market relative to the domestic bond market that typically range from 25 to 75 basis points and have averaged more than 50 basis points.

The debentures will be issued by the Financing Subsidiary at any time prior to June 30, 1985. The principal amount (which will not be greater than $100 million), the public offering price (not

less than 97 percent nor more than 100.5 percent of the principal amount), the maturity (not less than 3 nor more than 15 years), the interest rate, and the underwriters' fees and commissions would be determined through negotiations between CSW, the Financing Subsidiary, and the managing underwriter.

The application-declaration and any amendments thereto are available for public inspection through the Commission's Office of Public Reference. Interested persons wishing to comment or request a hearing should submit their views in writing by May 14, 1984, to the Secretary, Securities and Exchange Commission, Washington, D.C. 20549, and serve a copy on the applicants-declarants at the addresses specified above. Proof of service (by affidavit or, in case of an attorney at law, by certificate) should be filed with the request. Any request for a hearing shall identify specifically the issues of fact or law that are disputed. A person who so requests will be notified of any hearing, if ordered, and will receive a copy of any notice or order issued in this matter. After said date, the application-declaration, as filed or as it may be amended, may be granted and permitted to become effective.

For the Commission, by the Office of Public Utility Regulation, pursuant to delegated authority.

Shirley E. Hollis,

*Assistant Secretary.*

[FR Doc. 84-11231 Filed 4-25-84; 8:45 am]

BILLING CODE 6010-01-M

---

[Release No. 13894; 812-5678]

## The Putnam Management Co., Inc., et al.; Application for an Order Granting Exemption

April 19, 1984.

Notice is hereby given that The Putnam Management Company, Inc. ("PMC"), Putnam Fund Distributors, Inc. ("PFD"), The George Putnam Fund of Boston, Putnam California Tax Exempt Income Fund, Putnam Capital Fund, Inc., Putnam Convertible Fund, Putnam Daily Dividend Trust, The Putnam Growth Fund, Putnam Health Sciences Trust, Putnam High Yield Trust, Putnam Income Fund, Putnam Information Sciences Trust, Putnam International Equities Fund, Putnam Investors Fund, Putnam Massachusetts Tax Exempt Fund, Putnam New York Tax Exempt Income Fund, Putnam Option Income Trust, Putnam Tax Exempt Income Fund, Putnam Vista Fund, Putnam Voyager Fund, Depositors Investment Trust (collectively the "Putnam Funds"), Eberstadt Fund Management, Inc. ("EFM"), Eberstadt Asset Management, Inc. ("EAM"), and Chemical Fund, Inc., Surveyor Fund Inc., Eberstadt Energy-Resources Fund, Inc. and Eberstadt International Fund, L.P. (collectively, the "Eberstadt Funds") (all of the above herein referred to collectively as the "Applicants" One Post Office Square, Boston, Massachusetts 02110, filed an application on October 17, 1983, and an amendment thereto on April 2, 1984, requesting an order of the Commission, pursuant to Section 6(c) of the Investment Company Act of 1940 ("Act"), exempting from the definition of "interested person" of an investment company and of its investment adviser and principal underwriter under Section 2(a)(19) of the Act certain natural persons who might otherwise come within such definition solely by reason of their holding certain limited interests in securities of Marsh & McLennan Companies, Inc. ("Marsh & McLennan"). All interested persons are referred to the applications contained therein, which are summarized below, and are referred to the Act and the rules thereunder for a statement of the relevant provisions.

Applicants state that PMC, EAM and EFM are registered investment advisers under the Investment Advisers Act of 1940, and PFD is a registered broker-dealer under the Securities Exchange Act of 1934. PMC currently manages the Putnam Funds and EFM currently manages the Eberstadt Funds except Eberstadt International Fund, L.P., which is managed by EAM. PFD is the principal underwriter of the Putnam Funds and the Eberstadt Funds. Each of the Putnam Funds and the Eberstadt Funds are registered investment companies under the Act, the shares of which have been registered under the Securities Act of 1933. The Putnam Funds, the Eberstadt Funds and any other registered investment companies for which Marsh & McLennan or any of its subsidiaries may serve as investment adviser or principal underwriter in the future are hereinafter referred to collectively as the "Funds."

Applicants further state that PMC, PFD and EAM are wholly-owned subsidiaries of Marsh & McLennan Asset Management Company, a holding company which is in turn wholly-owned by Marsh & McLennan. EFM is a wholly-owned subsidiary of EAM. Applicants represent that, accordingly, Marsh & McLennan can be deemed to be a "controlling person" of PMC, PFD, EAM, and EFM.

Applicants represent that Marsh & McLennan and its consolidated subsidiaries comprise an international publicly held company, with total operating revenues of over $924 million and net income of over $120 million for the fiscal year ended December 31, 1982. Applicants state that March & McLennan provides professional advice and related services worldwide in three broad areas of activity: insurance services, employee benefits services and investment management. According to the application, revenues from all investment management services for the fiscal year ended December 31, 1982, were approximately $50 million, or approximately 5.4% of total operating revenue. Similarly, investment management services contributed only approximately $14 million or 6.6% of total operating income of approximately $210 million for that year. These figures include substantial revenues and income from services provided to clients other than registered investment companies. Applicants state that the investment company-related activities of PMC, PFD, EAM and EMF represented an extremely small portion of Marsh & McLennan's total business.

Applicants state that the securities of Marsh & McLennan are, and will likely continue to be, held and traded widely throughout the domestic and international securities markets. As of December 31, 1982, approximately 35 million shares of Marsh & McLennan common stock were issued and outstanding. Marsh & McLennan common stock is traded on the New York Stock Exchange. Marsh & McLennan has no outstanding preferred stock and no publicly held long-term debt. At December 31, 1982, it had $75,000,000 of short-term commercial paper outstanding.

Approximately 70% of the outstanding Marsh & McLennan common stock is held of record by approximately 400 nominees, brokers and banks, approximately 20% is held of record by approximately 10,000 individuals, and the balance is held of record by estates, trusts, corporations, institutions and pension funds. No information is available as to the holders of March & McLennan commercial paper, but it is believed that this is primarily held by institutions.

Applicants submit that Section 2(a)(19)(B)(iii) may cause a large group of individuals to be classified as interested persons of the Funds or their respective investment advisers or their principal underwriter solely on the basis of their holding an insignificant interest in securities of Marsh & McLennan. Without the order, directors or trustees who have no direct interest in Marsh & McLennan securities but who hold interests in mutual, pension or profit

sharing funds, or have ownership, employment, directorship or other ties with banks, insurance companies, other corporations or charitable endowments may possibly be deemed to be interested persons under a very broad application of Section 2(a)(19)(B)(iii). Applicants state that it may therefore become difficult for the Funds to maintain boards of directors and trustees which continue to meet the requirements of the Act.

Applicants have requested an order of the Commission pursuant to Section 6(c) of the Act exempting from the definition of "interested person" as defined in Section 2(a)(19) of the Act any director or trustee of any of the Funds (including any director or trustee elected in the future) who would otherwise be deemed to be an interested person of one or more of the Funds, PMC, PFD, EAM, EMF or any other subsidiary of Marsh & McLennan which may hereafter serve as investment adviser or principal underwriter for one or more of the Funds, solely by reason of such person having an indirect beneficial interest in, or being designated a trustee, executor or guardian of a legal interest in, any security issued by Marsh & McLennan, provided:

(1) such person's knowing indirect beneficial interest in securities issued by Marsh & McLennan (excluding interests held through or on behalf of any pension, profit sharing, retirement, dividend reinvestment, stock accumulation, stock appreciation or employee benefit plan or fund other than plans or funds designed primarily for, or involving participation primarily of, employees of Marsh & McLennan or its subsidiaries), including such indirect beneficial interests of such person's spouse and dependents, does not exceed any of the following: (a) 5% of such person's net worth; (b) 1% of the outstanding shares of any class of equity security or 1% of the outstanding principal amount of any class of debt security of Marsh & McLennan; or (c) 1% of the aggregate market value of all classes of such debt and equity securities; and

(2) such person is not designated as trustee, executor or guardian or any legal interest in such securities with respect to any trust, estate or person, respectively, which either: (a) Holds interests in securities of Marsh & McLennan which in the aggregate represent more than 5% of its net assets, or (b) derives income from interests in such securities which in the aggregate represents more than 5% of its net income, and in either case as to which such trustee, executor or guardian exercises investment discretion.

As used above, the term "trustee" shall include any person serving as director or trustee of, or in any other fiduciary capacity for, any corporation or trust (including a business trust).

The application further states that as a means of ascertaining compliance with the requested order, the Funds propose to undertake to solicit from their directors and trustees at least annually appropriate information regarding: (i) Their beneficial interests in securities of Marsh & McLennan, and (ii) the ownership of such securities by trusts, estates, or persons with respect to which they are designated as trustee, executor or guardian, respectively. The Funds will also request their directors and trustees to advise them promptly of any changes in such information.

Applicants state that the exemption requested is a fair and reasonable way to preserve the protective purposes of the Act while at the same time recognizing the unique circumstances created by the relationship of the Funds and their investment advisers and principal underwriter to a company like Marsh & McLennan. Applicants assert that the exemption generally would apply to individuals who hold an indirect beneficial interest or legal ownership of securities of Marsh & McLennan in amounts which are not significant from the standpoint either of control of Marsh & McLennan or of the individual's personal finances. They would not exempt from the definition of interested person any person who would come within this definition by reason of any provision of the Act other than Section 2(a)(19)(B)(iii). According to the Applicants, the exemption would thus only apply to persons whose independence is not impared by virtue of their relationship with any of the Funds' investment advisers or principal underwriters and is fashioned specifically to meet the Congressional concern that the persons responsible for providing "an independent check on management" and "a means for a representation of shareholder interests" are truly capable of doing so. Applicants submit that the requested exemption is both necessary and appropriate so that the significant investment vehicles provided by the Funds now and in the future remain under the guidance of the most capable boards of directors and trustees possible.

Notice is further given that any interested person wishing to request a hearing on the application may, not later than May 14, 1984, at 5:30 p.m., do so by submitting a written request setting forth the nature of his/her interest, the reasons for the request, and the specific issues of fact or law that are disputed, to the Secretary, Securities and Exchange Commission, Washington, D.C. 20549. A copy of the request should be served personally or by mail upon Applicant at the address stated above. Proof of service (by affidivit or, in the case of an attorney-at-law, by certificate) shall be filed with the request. After said date, an order disposing of the application will be issued unless the Commission orders a hearing upon request or upon its own motion.

For the Commission, by the Division of Investment Management, pursuant to delegated authority.

Shirley E. Hollis,

*Assistant Secretary.*

[FR Doc. 84-11230 Filed 4-25-84; 8:45 am]

BILLING CODE 8010-01-M

---

[Release No. 20881; SR-MSRB-84-4]

## Self-Regulatory Organizations; Municipal Securities Rulemaking Board; Order Approving Proposed Rule Change

April 19, 1984.

The Municipal Securities Rulemaking Board ("MSRB") 1150 Connecticut Avenue, NW., Washington, D.C. 20036, on February 24, 1984, submitted copies of a proposed rule change pursuant to Section 19(b)(1) of the Securities Exchange Act of 1934 ("Act") and Rule 19b-4 thereunder, which interprets MSRB Rule G-17.[1]

This interpretation results from the federal tax authorities' interpretation that any gain from the disposition of municipal bonds that have been stripped of their coupons or of the stripped coupons themselves (hereinafter the stripped bonds and stripped coupons will be referred to as "stripped securities") is taxable to the recipient of the gain. According to the proposed MSRB interpretation, a dealer is in violation of Rule G-17 if he induces a customer to purchase stripped securities by representing that any subsequent gain received by the customer upon a disposition of these securities would be tax-exempt. Furthermore, because the tax consequences of a municipal securities investment is generally a material consideration, Rule with respect to a customer's investment decision, under the MSRB interpretation, G-17 requires a dealer who induces a

[1] Rule G-17 requires, among other things, that municipal securities professionals deal fairly with all persons and must not "engage in any deceptive, dishonest or unfair practice."

customer to purchase or sell stripped securities to advise the customer of potential adverse tax consequences should the customer receive any gain from the disposition of these securities.

Notice of the proposed rule change was given in Securities Exchange Act Release No. 20742, published in the Federal Register (49 FR 9792, March 15, 1984). One comment was received regarding the proposed rule change. This comment, from the Comptroller of the Currency, Administrator of National Banks, supported the proposed interpretation, while suggesting that a similar interpretative statement is necessary to ensure that municipal securities dealers disclose to investors the potential adverse tax consequences when a municipal security is sold subject to a repurchase agreement or certain types of options to resell the security to the dealer.

The Commission finds that the proposed rule change is consistent with the requirements of the Act and the rules and regulations thereunder applicable to the MSRB, and in particular, the requirements of Section 15B and the rules and regulations thereunder.

It is therefore ordered, pursuant to Section 19(b)(2) of the Act, that the proposed rule change be, and it hereby is, approved.

For the Commission, by the Division of Market Regulation, pursuant to delegated authority. 17 CFR 200.30-3(a)(12).

Shirley E. Hollis,

*Assistant Secretary.*

[FR Doc. 84-11232 Filed 4-25-84; 8:45]

BILLING CODE 8010-01-M

---

[Release No. 20883; SR-Phlx-84-9, SR-PSE-84-8]

## Self Regulatory Organizations; Philadelphia Stock Exchange, Inc., et al.; Notice of Filings and Order Granting Accelerated Approval of Proposed Rule Changes

April 19, 1984.

In the Matter of the Philadelphia Stock Exchange, Inc., 1900 Market Street, Philadelphia, PA 19103; Pacific Stock Exchange, Inc., 618 South Spring Street, Los Angeles, CA 90014; SR-Phlx-84-9, SR-PSE-84-8.

Pursuant to Section 19(b)(1) of the Securities Exchange Act of 1934 (the "Act"), 15 U.S.C. 78s(b)(1), notice is hereby given that on April 12, and 13, 1984, the Philadelphia Stock Exchange, Inc. ("Phlx") and the Pacific Stock Exchange, Inc. ("PSE"), respectively, filed with the Securities and Exchange Commission the proposed rule changes as described herein. The Commission is publishing this notice to solicit comments on the proposed rule changes from interested persons.

The rule changes would permit open trading to continue until 4:00 p.m., with respect to the Phlx, and until 1:00 p.m., with respect to PSE, on the Friday prior to expiration in expiring series of stock options. The open trading would be followed by a closing rotation. Under existing rules, open trading in expiring stock options stops at 3:00 p.m. on Phlx and at 12:00 p.m. on PSE on the Friday prior to expiration, at which time there is a closing rotation. Phlx and PSE state that the purpose of the proposed rule changes is to take account of market developments. In addition, both exchanges indicate that the proposed rule changes will permit open trading in expiring stock option series to continue throughout the period the underlying stocks are traded. Open trading on expiring foreign currency option series will remain unchanged by the Phlx proposal and thus will continue to be permitted until 1:30 p.m.

Interested persons are invited to submit written data, views and arguments concerning the submissions within 21 days from the date of publication in the Federal Register. Persons desiring to make written comments should file six copies thereof with the Secretary of the Commission, Securities and Exchange Commission, 450 Fifth Street, NW., Washington, D.C. 20549. Reference should be made to File Nos. SR-Phlx-84-9 and SR-PSE-84-4.

Copies of the submissions, all subsequent amendments, all written statements with respect to the proposed rule changes which are filed with the Commission, and all written communications relating to the proposed rule changes between the Commission and any person, other than those which may be withheld from the public in accordance with the provisions of 5 U.S.C. 552, will be available for inspection and copying at the Commission's Public Reference Room. Copies of the filings and of any subsequent amendments also will be available at the principal office of the above-mentioned self-regulatory organization.

The Commission finds that the proposed rule changes are consistent with the requirements of the Act and the rules and regulations thereunder applicable to a national securities exchange and, in particular, the requirements of Section 6 and the rules and regulations thereunder.

The Commission finds good cause for approving the proposed rule changes prior to the thirtieth day after the date of publication of notice of filing thereof in that insofar as the proposals would alter the existing Phlx and PSE rules, they are substantially the same as the Chicago Board Options Exchange, Incorporated ("CBOE") and American Stock Exchange, Inc. ("Amex") rules recently published for public comment, considered and approved by the Commission.[1] In light of this fact, and to reduce the potential for confusion, accelerated approval is appropriate.

It is therefore ordered, pursuant to Section 19(b)(2) of the Act, that the proposed rule changes referenced above be, and hereby are, approved.

For the Commission, by the Division of Market Regulation pursuant to delegated authority.

Shirley E. Hollis,

*Assistant Secretary.*

[FR Doc. 84-11233 Filed 4-25-84; 8:45 am]

BILLING CODE 8010-01-M

---

## DEPARTMENT OF TRANSPORTATION

### Coast Guard

[CGD 84-033]

## Rules of the Road Advisory Council; Charter Renewal

**SUMMARY:** The Secretary of Transportation has approved the renewal of the Charter for the Rules of the Road Advisory Council.

The Council was established in accordance with section 5 of Pub. L. 96-591, The Inland Navigation Rules Act of 1980.

The purpose of this Council is to advise the Secretary of Transportation on matters relating to any major proposals for changes to the International and Inland Navigation Rules.

**FOR FURTHER INFORMATION CONTACT:** Commander Galen R. Siddall, USCG, Executive Director, Rules of the Road Advisory Council, U.S. Coast Guard (G-NSR-3) Washington, D.C. 20593, (202) 426-9566.

---

[1] *See* CBOE Rule 5.5 and Amex Rule 903(b). Proposed changes to these rules were approved by the Commission in File No. SR-CBOE-84-4, Securities Exchange Act Release No. 20779 March 21, 1984; and File No. SR-Amex-84-6, Securities Exchange Act Release No. 20832, April 6, 1984. The Amex rule change was granted accelerated approval on the basis of the CBOE filing.

Dated: April 23, 1984.

J. A. McDonough, Jr.,

*Rear Admiral, Coast Guard Chief, Office of Boating, Public, and Consumer Affairs.*

[FR Doc. 84-11275 Filed 4-25-84; 8:45 am]

BILLING CODE 4910-14-M

## Federal Highway Administration

### Environmental Impact Statement; Anchorage, Alaska

**AGENCY:** Federal Highway Administration (FHWA), DOT.

**ACTION:** Notice of intent.

**SUMMARY:** The FHWA is issuing this notice to advise the public that an Environmental Impact Statement will be prepared for a proposed transportation system improvement in the Municipality of Anchorage, Alaska.

**FOR FURTHER INFORMATION CONTACT:** Tom Neunaber, Field Operations Engineer, Federal Highway Administration, P.O. Box 1648, Juneau, Alaska 99801, telephone (907) 586-7428; Nicolette Thude, Acting Central Region Environmental Co-ordinator, Alaska Department of Transportation and Public Facilities, Pouch 6900, Anchorage, Alaska 99502, telephone (907) 266-1506.

**SUPPLEMENTARY INFORMATION:** The FHWA, in co-operation with the Alaska Department of Transportation and Public Facilities (ADOT&PF), will prepare an Environmental Impact Statement (EIS) on the proposed improvement to the transportation system within the boundaries of the Anchorage Metropolitan Area Transportation Study (AMATS). The proposed improvement is to construct a roadway on a new alignment connecting the underutilized Hiland Drive Interchange with the Eagle River Loop Road Extension. This includes the construction of a 400-foot bridge across Eagle River. Construction of the proposed transportation improvement is considered necessary for the following reasons: (1) To provide an important link within the regional transportation plan; (2) to provide improved access to employment, recreation, and other opportunities for Eagle River residents; (3) to improve traffic flow on the New Glenn Highway under the existing and projected traffic demand; (4) to reduce travel time and costs from Anchorage to Eagle River.

Alternatives under consideration include:

(1) No Action;

(2) Upgrade Existing Transportation System (TSM improvements); and

(3) Construct on a New Alignment.

Letters describing the proposed action and soliciting comments will be sent to appropriate Federal, State, and local agencies; private organizations; and also to citizens who have previously expressed interest in this proposal. Public information/scoping meetings will be held during late August at times and locations to be determined. At least one meeting will be held during business hours and another meeting will be held in the evening. A public hearing will be held in early 1985 after the Draft Environmental Impact Statement has been completed and made available for public and agency review.

To ensure that the full range of issues related to this proposed action are addressed and all significant issues identified, comments and suggestions are invited from all interested parties. Comments or questions concerning the proposed action should be directed to the FHWA or the ADOT&PF at the addresses provided above.

(Catalog of Federal Domestic Assistance Program Number 20.205, Highway Research Planning and Construction)

Issued: April 19, 1984.

Barry Morehead,

*Division Administrator, Federal Highway Administration, Juneau, Alaska.*

[FR Doc. 84-11259 Filed 4-25-84; 8:45 am]

BILLING CODE 4910-22-M

### Environmental Impact Statement; Volusia County, Florida

**AGENCY:** Federal Highway Administration (FHWA), DOT.

**ACTION:** Notice of intent.

**SUMMARY:** The FHWA is issuing this notice to advise the public that an environmental impact statement (EIS) will be prepared for a proposed highway project in Volusia County, Florida.

**FOR FURTHER INFORMATION CONTACT:** R. V. Robertson, District Engineer, Federal Highway Administration, 227 N. Bronough St., Room 2015, Tallahassee, Florida 32301, Telephone: (904) 681-7231.

**SUPPLEMENTARY INFORMATION:** The FHWA, in cooperation with the Florida Department of Transportation, will prepare an EIS for a proposal to improve State Road 5A (Nova Road) in Volusia County, Florida. The proposed improvement would involve the reconstruction of State Road 5A from U.S. Route 1 near the city of Port Orange to U.S. Route 1 in Ormond Beach, a distance of 15.6 miles. Improvements to the corridor are considered necessary to provide for the existing and projected traffic demand.

Alternatives under consideration include: (1) Taking no action, (2) widening to four and six lanes with a continuous left-turn lane; (3) widening to four and six lanes with a raised median; and (4) alternate corridors.

Federal, State, and local agencies have contributed early coordination comments through the A-95 process. Additionally, a project planning team developing this project will contact State, Federal, county, and local agencies for information relative to land use planning, water quality analysis, and local planning needs. Public information meetings will be held during the development of this EIS. In addition, a public hearing will be held. Public notice will be given of the time and place of the meetings and hearing. The draft EIS will be made available for public and agency review and comment prior to the public hearing. A formal scoping meeting is not planned for this project.

To ensure that the full range of issues related to this proposed action are addressed and all significant issues identified, comments and suggestions are invited from all interested parties. Comments or questions concerning this proposed action and the EIS should be directed to the Federal Highway Administration at the address provided above.

Issued: April 12, 1984.

P. E. Carpenter,

*Division Administrator, Tallahassee, Florida.*

[FR Doc. 84-11201 Filed 4-25-84; 8:45 am]

BILLING CODE 4910-22-M

## Maritime Administration

### Maritime Advisory Committee; Meeting

**AGENCY:** Maritime Administration, DOT.

**ACTION:** Notice.

**SUMMARY:** The Maritime Advisory Committee will hold its sixth meeting on Thursday, June 14, 1984, at 10:00 a.m. The meeting will be held in DOT's Nassif Building, 400 Seventh Street, SW., Washington, D.C., in Room 7200. The Committee is considering programs and policies on current maritime issues, and the agenda includes reviewing reports and recommendations from its working group on Ship Costs. The meeting will be open to the public on a space-available basis.

By Order of the Maritime Administrator.

Dated: April 23, 1984.

Georgia P. Stamas,

*Secretary.*

[FR Doc. 84-11294 Filed 4-25-84; 8:45 am]

BILLING CODE 4910-81-M

## DEPARTMENT OF THE TREASURY

### Office of the Secretary

### Boycott Provisions (Section 999) of the Internal Revenue Code; Additional Boycott Guidelines

**AGENCY:** Office of the Secretary, Treasury.

**ACTION:** Notice of additional guidelines.

**SUMMARY:** The Treasury Department today issued additional guidelines relating to those provisions of the Tax Reform Act of 1976, found in section 999 of the Internal Revenue Code, which deny certain tax benefits for participation in or cooperation with international boycotts. These guidelines consist of clarifications of earlier guidelines and new guidelines which will elaborate on the Department of the Treasury's enforcement of section 999, primarily in the areas of compliance with local laws and the use of vessel eligible clauses. These guidelines were published in proposed form on November 23, 1983 at 48 FR 53003.

**FOR FURTHER INFORMATION CONTACT:** David D. Joy, Office of the General Counsel, Department of the Treasury, 15th & Pennsylvania Avenue, NW, Washington, DC 20220, (202-566-5569—not a toll-free call).

**SUPPLEMENTARY INFORMATION:** This document contains additional guidelines relating to the Department of the Treasury's enforcement of section 999 of the Internal Revenue Code. Section 999 incorporates provisions of the Tax Reform Act of 1976 (90 Stat. 1649-54), specifically sections 1061-1064 (known as the "Ribicoff Amendment"), which deny certain tax benefits for participation in or cooperation with international boycotts. Published guidelines which are still in effect today are found at 44 FR 66272 (November 19, 1979) and 43 FR 3454 (January 25, 1978).

#### Executive Order 12291

The Department of the Treasury has determined that these guidelines are not a major rule as defined in Executive Order 12291, and that a Regulatory Impact Analysis is therefore not required.

#### Analysis of Comments

These guidelines were published in proposed form for comment on November 23, 1983, at 48 FR 53003. The Department of the Treasury received three letters offering comments on these guidelines. Two of the letters focused on Guideline H-38, arguing that the Department of Treasury should permit the use of the clause "except to the extent prohibited by U.S. law" to take a compliance clause out of the coverage of section 999. The third letter stated that the presumption that "vessel eligible" and "shall comply with local law" clauses are boycott-related should be reversed to give such clauses a presumption that they are not boycott-related.

After considering these comments, the Department of Treasury has decided not to implement these recommendations. The Department, however, has changed the word "Similarly" in Guideline J-3 to "On the other hand", substituted the word "clarification" for "correction" after Guidelines A-9, J-3, M-5, and M-7, and changed the number of "proposed" Guideline M-15 to Guideline M-14.

#### Drafting Information

The principal author of these guidelines is Leonard Santos, formerly of the Office of the General Counsel, Department of the Treasury. David Joy from the Office of the General Counsel also participated in developing the guidelines.

The Guidelines are amended as follows:

* * * * *

*A-9 (clarification).* Q: Section 999(b)(4) permits a person to agree to comply with certain laws without being treated as having agreed to participate in or cooperate with an international boycott. In the course of its operations in or related to a boycotting country, a person agrees to comply with a prohibition on importation and exportation that is described in section 999(b)(4)(B) and section 999(b)(4)(C). Is that person required to report the operations on Form 5713?

A: Yes. Although agreements described in section 999(b)(4) (B) and (C) do not constitute participation in or cooperation with an international boycott, the operations in or related to a boycotting country must be reported on Form 5713. However, requests to enter into agreements described in section 999(b)(4) (B) and (C) are not reportable on Form 5713.

* * * * *

*J-3 (clarification).* Q: Company C competes for an industrial plant construction contract for which Company P of Country W is inviting international tenders. The contract is to be financed by Country X which maintains a blacklist of companies. Country X requires contracts for projects which it finances to state that the contractor is required to refrain from making any purchase for the project from any blacklisted company. Country W does not boycott those companies. Company C wins the tender and signs the contract with Company P with the blacklist provision. Does Company C's action constitute participation in or cooperation with an international boycott under section 999(b)(3)(A)(ii)?

A: Generally, yes (see Guideline H-1A). Although the boycott is not implemented by Country W, but by Country X, and the project is being carried out in Country W, Company C has agreed not to do business with blacklisted U.S. companies as a condition of doing business indirectly with Country X. On the other hand, if the contract financed by Country X in Country W precluded the use of Country Y goods in connection with the project in Country W, the exception reflected in section 999(b)(4)(B) would apply to Company C's agreement and that agreement would not constitute participation in or cooperation with an international boycott.

* * * * *

*M-5 (clarification).* Q: Company C enters into a contract to export goods to or from Country X. The contract requires Company C not to ship the goods on a Country Y flag vessel or on a vessel owned, controlled, operated or chartered by Country Y or by companies or nationals of Country Y, or on a ship which during the voyage calls at Country Y enroute to or from Country X. Does Company C's action constitute participation in or cooperation with an international boycott under section 999(b)(3)?

A: No. The requirement in the contract is not a restrictive boycott practice. Rather, the contract provision is presumed to arise from the need to protect goods from damage or loss. However, this answer would not cover a restriction on the choice or route of a vessel when it carries no goods destined for or originating in Country X. The presumption described in this answer arises in every case where such clauses are used in connection with countries which are hostile to each other.

* * * * *

*M-7 (clarification).* Q: Company C signs a contract to export goods to Country X. The contract provides that the goods may not be shipped on a vessel that has been blacklisted by Country X because it has called at Country Y in the past. Does Company C's action constitute participation in or cooperation with an international boycott under section 999(b)(3)(B)?

A: Yes.

* * * * *

The following guidelines are added:

* * * * *

*C-2.* Q: Company C is engaged in the sale of machinery to Country W. Company C has no knowledge or reason to know that Country W requires participation in or cooperation with an international boycott as a condition of doing business within Country W or with its government, companies or nationals, except that Company C is asked to sign a contract with Country W of the type described in Guideline M-5. Does Company C have knowledge that Country W is a boycotting country such that its operations with Country W are reportable?

A: No. Where the only Country W requirements of which Company C knows or has reason to know involve requests which, if agreed to, are not defined to constitute participation in or cooperation with an international boycott, Company C has no reason to treat Country W as a boycotting country.

* * * * *

*H-37.* Q: Company C signs a contract which provides that in connection with its performance Company C acknowledges that the import and customs laws and regulations of Country X shall apply to the furnishing and shipment of any products or components thereof to Country X, and that Company C acknowledges that such import and customs laws and regulations prohibit, among other things, the importation into Country X of products or components: (1) originating in Country Y; (2) manufactured, produced or furnished by companies organized under the laws of Country Y; and (3) manufactured, produced or furnished by nationals or residents of Country Y. Does Company C's contract constitute an agreement under section 999(b)(3)?

A: No. (see Guideline H-3). Company C has merely acknowledged that such import and customs laws shall apply to the furnishing of goods under the contract. However, an agreement by Company C to comply with Country X's restriction on the importation of goods furnished either by companies organized under Country Y's laws or by nationals of Country Y would constitute an agreement under section 999(b)(3).

*H-38.* Q: Company C signs a contract in which it agrees to comply with the laws, rules and regulations of Country X, except to the extent such compliance is penalized under laws of the United States. Does Company C's contract constitute an agreement under section 999(b)(3)?

A: No. An agreement to comply with the laws, rules and regulations of Country X does not constitute an agreement under section 999(b)(3) when such a commitment is qualified by excepting out compliance penalized by U.S. law, including section 999. Any phrase which effectively excludes the agreements described in section 999 from the requirements of a contract with Country X would support the same result. For example, a compliance clause qualified by "except to the extent inconsistent with U.S. law" would also suffice to take the contract out of the coverage of section 999. However, a compliance clause qualified by the phrase "except to the extent *prohibited* by U.S. law" would not defeat the presumption that the contractual provision requires agreements penalized under section 999, since section 999 does not prohibit anything, but merely penalizes certain agreements.

*H-39.* Q: Company C signs a contract to construct an industrial plant in Country X. The contract states that the laws, regulations, requirements or administrative practices of Country X shall govern Company C's performance of the contract in Country X. The laws, regulations, requirements or administrative practices of Country X prohibit the importation into Country X of goods manufactured by any company engaged in trade in Country Y or with the government, companies or nationals of Country Y. Does Company C's action constitute an agreement under section 999(b)(3)?

A: No. (see Guideline H-3). The answer would be the same if the contract has instead stated that Company C would be "subject to" the laws, regulations, requirements or administrative practices of Country X.

*H-40.* Q: Company A signs a contract to export goods to Country X. The contract provides that payment will be made by means of a letter of credit confirmed by Bank C. The letter of credit requires Company A to provide to Bank C a certificate stating that the ship on which the goods are to be shipped is eligible to enter the ports of Country X in conformity with its laws and regulations, and that the insurer of the goods has a duly qualified and appointed agent or representative in Country X. Country X's laws and regulations prohibit, *inter alia,* black-listed vessels from calling at its ports and blacklisted insurance companies from qualifying or appointing an agent in Country X. Bank C confirms the letter of credit requiring the shipping and insurance certificates. Does Bank C's action constitute an agreement under section 999(b)(3)?

A: Yes. Unless Country X has offered the kind of explanation described in Guidelines M-12 and M-13, Bank C's confirmation of the letter of credit constitutes an agreement to refrain from doing business with a U.S. person under section 999(b)(3)(A)(ii). The answer would be the same under section 999(b)(3)(A)(i), if the beneficiary of the letter of credit were organized under the laws of Country Y, and under section 999(b)(3)(A)(iii), if Bank C had reason to know that it would not be able to obtain the required certificate because of the nationality, race, or religion of the beneficiary's ownership, management, or directors. See Guideline H-29A.

* * * * *

*L-6.* Q: Company C signs a construction contract that provides that Company C is not to employ individuals or nationals of any country not diplomatically recognized by Country X. Does Company C's action constitute participation in or cooperation with an international boycott under section 999(b)(3)(A)(iv)?

A: To the extent that Country Y is only one of several countries not recognized by Country X, the exclusion of nationals from unrecognized countries under the contract is not, on its face, boycott related. In those circumstances, agreement to the clause in question would not constitute an agreement to participate in or cooperate with an international boycott under section 999(b)(3). However, where Country Y is the only country not recognized by Country X, agreement to such a clause will constitute an agreement to participate in or cooperate with an international boycott under section 999(b)(3).

* * * * *

*M-14.* Q: Company C signs a contract to export goods to Country X. The contract provides that payment will be made by means of a letter of credit confirmed by Bank C. The letter of credit requires Company C to provide to Bank C a certificate stating that the goods are being shipped on a U.S. or Country X flag carrier *or,* alternatively, that the ship on which the goods are being shipped is eligible to enter the ports of Country X. Company C provides a certificate stating that the goods have been shipped on a U.S. or Country X flag carrier. Does Company C's acceptance of the letter of credit constitute an agreement under section 999(b)(3)?

A: No. Where the letter of credit requires alternative certifications, one of which is acceptable within the terms of section 999(b)(3), and Company C performs in accordance with that acceptable alternative (i.e., shipping on a U.S. or Country X flag carrier), it is presumed that Company C's agreement

included only the acceptable alternative. If Company C were to utilize a ship "eligible to enter the ports of Country X," Guideline M-10 would apply.

Dated: April 9, 1984.

John E. Chapoton,

*Assistant Secretary (Tax Policy).*

[FR Doc. 84-10206 Filed 4-25-84; 8:45 am]

BILLING CODE 4810-25-M

---

## Fiscal Service

[Dept. Circ. 570, 1983 Rev., Supp. No. 21]

### Midwestern Casualty & Surety Co.; Surety Companies Acceptable on Federal Bonds; Termination of Authority

Notice is hereby given that the certificate of authority issued by the Treasury to Midwestern Casualty & Surety Company, under Sections 9304 to 9308 of Title 31 of the United States Code, to qualify as an acceptable surety on Federal bonds is hereby terminated effective this date.

The company was last listed as an acceptable surety on Federal bonds at 48 FR 30536, July 1, 1983.

With respect to any bonds currently in force with Midwestern Casualty & Surety Company, bond-approving officers for the Government may let such bonds run to expiration and need not secure new bonds. However, no new bonds should be accepted from the company.

Questions concerning this notice may be directed to the Operations Staff (Surety), Banking and Cash Management, Bureau of Government Financial Operations, Department of the Treasury, Washington, D.C. 20226, telephone (202) 634-5745.

Dated: April 18, 1984.

W. E. Douglas,

*Commissioner.*

[FR Doc. 84-11279 Filed 4-25-84; 8:45 am]

BILLING CODE 4810-35-M

# Sunshine Act Meetings

Federal Register
Vol. 49, No. 82
Thursday, April 26, 1984

This section of the FEDERAL REGISTER contains notices of meetings published under the "Government in the Sunshine Act" (Pub. L. 94-409) 5 U.S.C. 552b(e)(3).

## CONTENTS

| | Item |
|---|---|
| Civil Rights Commission | 1 |
| Equal Employment Opportunity Commission | 2 |
| Federal Deposit Insurance Corporation | 3, 4 |
| Federal Election Commission | 5 |
| Federal Home Loan Mortgage Corporation | 6 |
| Federal Maritime Commission | 7 |
| National Science Board | 8 |
| Pacific Northwest Electric Power and Conservation Planning Council | 9 |
| Tennessee Valley Authority | 10 |

1

**CIVIL RIGHTS COMMISSION**

**PLACE:** Room 512, 1121 Vermont Avenue, NW., Washington, D.C.

**DATE AND TIME:** Tuesday, May 1, 1984, 9:00 a.m.–1:00 p.m., Wednesday, May 2, 1984, 9:00 a.m.–12:00 noon; 1:30–3:00 p.m.

**STATUS OF MEETING:** Open to the public.

**MATTERS TO BE CONSIDERED:**

*Tuesday, May 1*

I. Approval of Agenda
II. Approval of Minutes of Last Meeting
III. Staff Director's Report
A. Status of Funds
B. Personnel Report
C. Office Directors' Reports
IV. Project Proposal re: New Perspectives on Discrimination in the Eighties
V. Project Proposal re: Affirmative Action in Higher Education
VI. Project Proposal re: Religious, Racial and National Origin Bigotry and Violence
VII. Project Proposal re: Redistricting and Minorities
VIII. Memorandum re: Hearing Concepts

*Wednesday, May 2, 1984*

IX. Memorandum re: FY 1985 Program Decisions and FY 1986 Preliminary Program Decisions
X. Civil Rights Developments in the Northwest Region
XI. Action re: "Access for the Disabled to Wyoming's Higher Education"
XII. Action re: "Fair Housing Enforcement in Northwest Indiana"
XIII. Transmittal of Kansas A.C. Report re: "Prevention of Discrimination in Selected Block Grant Programs"
XIV. Transmittal of Utah A.C. Report re: "Women in Nontraditional Jobs"
XV. Interim Appointments to Indiana Advisory Committee

**PERSON TO CONTACT FOR FURTHER INFORMATION:** Barbara Brooks, Press and Communications Division, (202) 276–8312.

Lawrence B. Glick,
*Solicitor.*

[FR Doc. 84-11427 Filed 4-24-84; 3:03 pm]
BILLING CODE 6335-01-M

2

**EQUAL EMPLOYMENT OPPORTUNITY COMMISSION**

**DATE AND TIME:** Tuesday, May 1, 1984, 9:30 a.m. (Eastern Time).

**PLACE:** Commission Conference Room No. 200–C on the 2nd Floor of the Columbia Plaza Office Building, 2401 "E" Street, NW. Washington, D.C. 20507.

**STATUS:** Part will be open to the public and part will be closed to the public.

**MATTERS OF BE CONSIDERED:**

1. Announcement of Notation Votes
2. A Report on Commission Operations (Optional)
3. Freedom of Information Act Appeal No. 84–3–FOIA–41–SL, concerning a request for contents of a Commission charge file.
4. Freedom of Information Act Appeal No. 84–3–FOIA–20–NO, concerning a request for documents concerning Log of Investigative/settlement action and investigative plan.
5. Proposed Contract for services needed in Connection with a Court case.
6. Proposed Compliance Manual Section 628, Religious Accommodation
7. Proposed Section 633, Wage Discrimination

*CLOSED*

1. Litigation Authorization; General Counsel Recommendations
2. Consideration of Subpoenas
3. Proposed Commissioner Charge Withdrawals
4. Consideration of Certain ORAs

Note.—Any matter not discussed or concluded may be carried over to a later meeting. (In addition to publishing notices on EEOC Commission Meetings in the Federal Register, the Commission also provides recorded announcements a full week in advance on future Commission sessions. Please telephone (202) 634–6748 at all times for information on these meetings).

**CONTACT PERSON FOR MORE INFORMATION:** Treva McCall, Executive Secretary to the Commission at (202) 634–6748.

Dated: April 24, 1984.
Treva McCall,
*Executive Secretary to the Commission.*

[FR Doc. 84-11439 Filed 4-24-84; 3:50 pm]
BILLING CODE 6750-06-M

3

**FEDERAL DEPOSIT INSURANCE CORPORATION**

Notice of Agency Meeting

Pursuant to the provisions of the "Government in the Sunshine Act" (5 U.S.C. 552b), notice is hereby given that at 10:45 a.m. on Friday, April 20, 1984, the Board of Dirctors of the Federal Deposit Insurance Corporation met in closed session, by telephone conference call, to adopt a resolution: (1) Making funds available for the payment of insured deposits in Gamaliel Bank, Gamaliel, Kentucky, which had been closed by the Commissioner of Banking and Securities for the Commonwealth of Kentucky on Thursday, April 19, 1984; (2) accepting the bid of, and appointing Deposit Bank of Monroe County, Tompkinsville, Kentucky, an insured State nonmember bank, as the transfer agent for the Corporation for the payment of insured and fully secured deposits of the closed bank; (3) approving the application of Deposit Bank of Monroe County, Tompkinsville, Kentucky, for consent to establish the main office and branch of Gamaliel Bank, Gamaliel, Kentucky, as branches of Deposit Bank of Monroe County; and (4) making funds available for an advance payment to uninsured depositors and other general creditors of Gamaliel Bank equal to 55 percent of their uninsured claims.

In calling the meeting, the Board determined, on motion of Chairman William M. Isaac, seconded by Director Irvine H. Sprague (Appointive), concurred in by Mr. H. Joe Selby, acting in the place and stead of Director C. T. Conover (Comptroller of the Currency), that Corporation business required its consideration of the matters on less than seven days' notice to the public; that no earlier notice of the meeting was practicable; that the public interest did not require consideration of the matters in a meeting open to public observation; and that the matters could be considered in a closed meeting pursuant to subsections (c)(8), (c)(9)(A)(ii), and (c)(9)(B) of the "Government in the

Sunshine Act" (5 U.S.C. 552b (c)(8), (c)(9)(A)(ii), and (c)(9)(B)).

Dated: April 23, 1984.

Federal Deposit Insurance Corporation.

Hoyle L. Robinson,

*Executive Secretary.*

[FR Doc. 84-11402 Filed 4-24-84; 12:34 pm]

BILLING CODE 6714-01-M

---

4

**FEDERAL DEPOSIT INSURANCE CORPORATION**

Notice of Change in Subject Matter of Agency Meeting

Pursuant to the provisions of subsection (e)(2) of the "Government in the Sunshine Act" (5 U.S.C. 552b(e)(2)), notice is hereby given that at its open meeting held at 2:00 p.m. on Monday, April 23, 1984, the Corporation's Board of Directors determined, on motion of Chairman William M. Isaac, seconded by Director Irvine H. Sprague (Appointive), concurred in by Director C. T. Conover (Comptroller of the Currency), that Corporation business required the addition to the agenda for consideration at the meeting, on less than seven days' notice to the public, of the following matter:

Recommendation regarding the liquidation of a bank's assets acquired by the Corporation in its capacity as receiver, liquidator, or liquidating agent of those assets:

Case No. 45,889-L (Amended)—The First National Bank of Midland, Midland, Texas

By the same majority vote, the Board further determined that no earlier notice of this change in the subject matter of the meeting was practicable.

Dated: April 23, 1984.

Federal Deposit Insurance Corporation.

Hoyle L. Robinson,

*Executive Secretary.*

[FR Doc. 84-11403 Filed 4-24-84; 12:34 pm]

BILLING CODE 6714-01-M

---

5

**FEDERAL ELECTION COMMISSION**

**DATE AND TIME:** Friday, April 20, 1984, 10:00 a.m.

**PLACE:** 1325 K Street, NW., Washington, D.C.

**STATUS:** This meeting was closed to the public—Pursuant to 11 CFR 3.5(b), the Commission determined that Commission business so required, and that no earlier announcement of this meeting was possible, and accordingly voted to hold an Executive Session to consider a compliance matter.

* * * * *

**AGENCY:** Federal Election Commission

**FEDERAL REGISTER No. 84-10713**

**PREVIOUSLY ANNOUNCED DATE AND TIME:** Thursday, April 26, 1984, at the Conclusion of the open meeting.

**CHANGE IN MEETING:** The closed meeting scheduled for this date has been cancelled.

**DATE AND TIME:** Tuesday, May 1, 1984, 10:00 a.m.

**PLACE:** 1325 K Street, N.W., Washington, D.C.

**STATUE:** This meeting will be closed to the public.

**ITEMS TO BE DISCUSSED:** Compliance. Litigation. Audits. Personnel.

* * * * *

**DATE AND TIME:** Thursday, May 3, 1984, 10:00 a.m.

**PLACE:** 1325 K Street, N.W., Washington, D.C. (Fifth Floor)

**STATUE:** This meeting will be open to the public.

**MATTERS TO BE CONSIDERED:**

Setting of dates of future meetings
Correction and approval of minutes
Eligibility for candidates to receive Presidential Primary matching funds
Draft Advisory Opinion #1984-4: Shatzi Duffy, WCCL-PAC Dir., Wisconsin Citizens Concerned for Life PAC
Draft Advisory Opinion #1984-13: Gray D. Lipkin, Asst. GC, National Association of Manufacturers
Finance Committee Report
Routine administrative matters

**PERSON TO CONTACT FOR INFORMATION:** Mr. Fred Eiland, Information Officer, Telephone: 202-523-4065.

Marjorie W. Emmons,

*Secretary of the Commission.*

[FR Doc. 84-11436 Filed 4-24-84; 8:45 am]

BILLING CODE 6715-01-M

---

6

**FEDERAL HOME LOAN MORTGAGE CORPORATION**

**DATE AND TIME:** April 30, 1984, 2:30 p.m.

**PLACE:** 1776 G Street, NW., Washington, D.C., Conference Room 4-G.

**STATUS:** Closed.

**CONTACT PERSON FOR MORE INFORMATION:** Alan B. Hausman, 1776 G Street, NW., P.O. Box 37248, Washington, D.C. 20013, (202) 789-4763.

**MATTERS TO BE CONSIDERED:**

Closed—Minutes of March 29, 1984 Board of Directors' Meeting, Minute Entry
Closed—President's Report
Closed—Financial Report, Minute Entry

Date sent to Federal Register: April 24, 1984.

Maud Mater,

*Corporate Secretary.*

[FR Doc. 84-11425 Filed 4-24-84; 3:10 pm]

BILLING CODE 6720-02-M

---

7

**FEDERAL MARITIME COMMISSION**

**"FEDERAL REGISTER" CITATION OF PREVIOUS ANNOUNCEMENT:** April 20, 1984, 49 FR 16920.

**PREVIOUSLY ANNOUNCED TIME AND DATE OF THE MEETING:** April 25, 1984, 9:00 a.m.

**CHANGE IN THE MEETING:** The Commission meeting of April 25, 1984 at 9:00 a.m. has been cancelled.

Francis C. Hurney,

*Secretary.*

[FR Doc. 84-11426 Filed 4-24-84; 3:10 pm]

BILLING CODE 6730-01-M

---

8

**NATIONAL SCIENCE BOARD**

**DATE AND TIME:**

May 10, 1984, 9:00 a.m., Closed Session
May 10, 1984, 9:10 a.m., Open Session
May 11, 1984, 9:00 a.m., Closed Session
May 11, 1984, 9:00 a.m., Open Session

**PLACE:** National Science Foundation, Washington, D.C.

**STATUS:** Most of this meeting will be open to the public. Part of the meeting will be closed to the public.

**MATTERS TO BE CONSIDERED AT THE OPEN SESSIONS:**

*Thursday, May 10, 1984—9:10 a.m.*

1. Minutes—March 1984 Meeting
2. Chairman's Items
3. Director's Report
4. Annual Business
5. Scientific Colloquium on Chemistry

*Friday, May 11, 1984—9:30 a.m.*

6. Grants, Contracts, and Programs
7. Letter Report of Committee on International Science
8. NSF Budget for Fiscal Year 1986
9. Report of Ad Hoc Committee on Institutes
10. Reports of Board Committees
11. Board Representation at Advisory Committee and Other Meetings
12. Other Business
13. Next Meetings

**MATTERS TO BE CONSIDERED AT THE CLOSED SESSIONS:**

*Thursday, May 10, 1984—9:00 a.m.*

A. Minutes—March 1984 Meeting
B. NSB and NSF Staff Nominees
C. Annual Election—Chairman and Vice Chairman and Two Members of Executive Committee

*Friday, May 11, 1984—9:00 a.m.*

D. Grants, Contracts, and Programs

Margaret L. Windus;

*Executive Officer.*

[FR Doc. 84-11391 Filed 4-24-84; 11:25 am]

BILLING CODE 7555-01-M

---

9

**PACIFIC NORTHWEST ELECTRIC POWER AND CONSERVATION PLANNING COUNCIL**

**AGENCY HOLDING THE MEETING:** Pacific Northwest Electric Power and Conservation Planning Council (Northwest Power Planning Council).

**ACTION:** Addition of agenda items.

**DATES:** March 15 and April 12, 1984.

**PLACES:** ERB Memorial Union, University of Oregon, Eugene, Oregon and Red Lion Motor Inn/Riverside, Boise, Idaho.

**SUMMARY:** The Government in the Sunshine Act, 5 U.S.C. 552b, requires Federal Register notice whenever an agency adds an item to its meeting agenda after the meeting had been publicly announced. At its March 15 meeting in Eugene, Oregon, the Council voted to add to its agenda discussion of Bonneville Power Administration's average system cost methodology. At its April 11 meeting, the Council voted to add to its agenda a "Panel Discussion on Utility Program to Marketing Conservation Efficient Homes." In each case, the Council determined that Council business required the addition to the agenda and that no earlier notice of the addition was practicable. The decisions to add these items to the agenda were made soon before the Council meetings. The additions to the agenda were then publicly announced at those Council meetings.

**CONTACT PERSON FOR MORE INFORMATION:** Ms. Bess Wong, (503) 222-5161.

Edward Sheets,

*Executive Director.*

[FR Doc. 84-11394 Filed 4-24-84; 12:20 pm]

BILLING CODE 0000-00-M

---

10

**TENNESSEE VALLEY AUTHORITY**

**[Meeting No. 1329]**

**TIME AND DATE:** 6:00 p.m. (CDT), April 30, 1984.

**PLACE:** Oakland High School Auditorium, Patriot Drive, Murfreesboro, Tennessee.

**STATUS:** Open.

*Agenda Items*

Approval of minutes of meeting held on April 4, 1984.

*Action Items*

B—Purchase Awards

B1. Negotiation 62-947849—Pipe removal and installation for Browns Ferry Nuclear Plant unit 1.

C—Power Items

C1. Agreement between the Institute of International Education and TVA whereby TVA will conduct an 8-week Energy Conservation Training Program for approximately 25-30 program participants from underdeveloped countries.

C2. Agreement covering certain modified arrangements for North Georgia Electric Membership Corporation's participation in TVA's room-unit thermal-storage field test.

D—Personnel Items

D1. Renewal of consulting contract No. TV-51219A with Stanley D. Wilson, Seattle, Washington, for services in connection with geotechnic and foundation engineering, requested by the Division of Engineering Design.

F—Unclassified

F1. Final amendments to regulation implementing Title VI of the Civil Rights Act of 1964.

F2. Changes in designation of certifying officers authorized to approve payments made by TVA.

F3. Supplement to Contract No. TV-56909A with Eastern Band of Cherokee Indians covering arrangements for development of historical and cultural resources of Tellico project area.

F4. Interagency Agreement No. TV-64095A with the U.S. Department of Energy for an instream contaminant study.

F5. Supplement to Interagency Agreement No. TV-61855A with the U.S. Department of Energy covering arrangements for conducting a Southeastern Regional Biomass Energy Program.

F6. Letter Agreement No. TV-63821A with the U.S. Army Corp of Engineers covering the engineering design work that TVA will be performing for the U.S. Army Corp of Engineers for the rehabilitation work at Pickwick auxiliary lock.

**CONTACT PERSON FOR MORE INFORMATION:** Craven H. Crowell, Jr., Director of Information, or a member of his staff can respond to requests for information about this meeting. Call (615) 632-8000, Knoxville, Tennessee. Information is also available at TVA's Washington Office (202) 245-0101.

Dated: April 23, 1984.

W. F. Willis,

*General Manager.*

[FR Doc. 84-11408 Filed 4-24-84; 8:45 am]

BILLING CODE 8120-01-M

Federal Register

Thursday
April 26, 1984

## Part II

# Department of Commerce

National Oceanic and Atmospheric Administration

50 CFR Part 250

Fisheries Loan Fund Procedures; Available Fisheries Loans and Open Season for Applications; Final Rule

**DEPARTMENT OF COMMERCE**

**National Oceanic and Atmospheric Administration**

**50 CFR Part 250**

## Fisheries Loan Fund Procedures; Available Fisheries Loans and Open Season for Applications

**AGENCY:** National Marine Fisheries Service (NMFS), NOAA, Commerce.

**ACTION:** Notice of Available Fisheries Loans and Open Season for Applications.

**SUMMARY:** NOAA issues this notice that emergency loans from the Fisheries Loan Fund are still available to fishing vessel owners during fiscal year 1984 (October 1, 1983, to September 30, 1984). Fishermen whose vessels are financed under the Fisheries Obligation Guarantee Program may apply at any time before September 30, 1984. Fishermen whose vessels are not financed under the Fisheries Obligation Guarantee Program may apply, however, only during an open season from January 15 through July 1, 1984. The previous open season for this second class of applications was from January 15 through March 31, 1984. This notice will provide potential applicants with specific eligibility criteria and application instructions.

**DATES:** Applications will be received through July 1, 1984.

**ADDRESSES:** Application instructions and information can be obtained from the nearest Regional Financial Services Branch of the National Marine Fisheries Service office listed below:

1. Residents of New England, Mid-Atlantic, and Great Lakes areas contact: National Marine Fisheries Service, Northeast Region, Financial Services Branch, Federal Building, 14 Elm Street, Gloucester, Massachusetts 01930; (617) 281-3600.

2. Residents of Gulf of Mexico, South Atlantic, and Caribbean areas contact: National Marine Fisheries Service, Southeast Region, Financial Services Branch, 9450 Koger Boulevard, St. Petersburg, Florida 33702; (813) 983-3148.

3. Residents of California, Hawaii, American Samoa, and Guam contact: National Marine Fisheries Service, Southwest Region, Financial Services Branch, 300 South Ferry Street, Terminal Island, California 90731; (213) 548-2478.

4. Residents of Washington, Oregon, and Alaska contact: National Marine Fisheries Service, Northwest Region, Financial Services Branch, 7600 Sand Point Way NE, BIN C15700, Seattle, Washington 98115; (206) 527-6122.

**FOR FURTHER INFORMATION CONTACT:** Michael L. Grable, Chief, Financial Services Division, National Marine Fisheries Service, 3300 Whitehaven St. N.W., Washington, D.C. 20235, (202) 634-7496.

**SUPPLEMENTARY INFORMATION:** The Fisheries Loan Fund was created by Sec. 4 of the Fish and Wildlife Act of 1956, as amended by the American Fisheries Promotion Act. The purpose of the Fund is to assist owners or operators of commerical fishing vessels to avoid default on vessel mortgages which financed the construction, reconstruction, or reconditioning of their fishing vessels. Three million dollars are available for emergency loans from the Fisheries Loan Fund in fiscal year 1984.

One million dollars are reserved for fishermen whose vessels are financed under the Fisheries Obligation Guarantee Program. Applications presently pending decision from these fishermen amount to only about two-thirds of the one million dollars. These fishermen may apply at any time before September 30, 1984. Their applications should, however, be submitted as soon as possible. Fishermen whose vessels are financed under the Fisheries Obligation Guarantee Program should call the nearest Regional Financial Services Branch of the National Marine Fisheries Service to get application advice.

Two million dollars are reserved for fishermen whose vessels are not financed under the Fisheries Obligation Guarantee Program. Applications presently pending decision from these fishermen amount to only about one-half of the two million dollars. *These fishermen may apply only during the application open season from January 15 through July 1, 1984. The rest of this notice establishes application instructions and qualification criteria only for those fishermen whose vessels are not financed under the Fisheries Obligation Guarantee Program.*

Information collection requirements contained in this Notice have been approved by the Office of Management and Budget under the provisions of the Paperwork Reduction Act and have been assigned OMB Control #0648-0133.

*What is available:*

(1) The loan funds are available without regard to applicants' location.

(2) Interest rate is 3 percent.

(3) Repayment maturity is *up to* 10 years.

(4) *Maximum* loan amount is one year's worth of mortgage payments (loan funds may, however, be disbursed to trade creditors in lieu of a vessel's mortgagee).

*To whom loans are available:*

(1) You must be a U.S. citizen.

(2) You must own a commercial fishing vessel of at least 5 net tons.

(3) You must be in actual or potential jeopardy of defaulting on a mortgage which financed the above vessel's construction, reconstruction, or reconditioning.

(4) You must have at least 3 years experience as a fishing vessel owner.

(5) You cannot be in bankruptcy.

(6) Your mortgage cannot already be in process of foreclosure.

(7) You cannot have other assets reasonably capable of generating the funds for which this loan is sought (assets reasonably necessary for other purposes [like the operation of another business for example], relatively illiquid assets, and a reasonable amount of personal property are excluded).

(8) Your situation must be such that the requested loan, if approved, will result in a reasonable assurance of financial viability.

(9) Applications which are not materially complete at the time of our receipt may not be accepted.

(10) Do not apply unless you meet *all* the above requirements.

*How loan will be made available:*

(1) Applications submitted before or after the open season will not be accepted.

(2) Applications will be considered in the order of receipt by us.

(3) Applications will be given *extra* consideration if mortgage holders or trade creditors are willing to make concessions which will complement a fisheries loan. If, *for example,* you apply for a $25,000 fisheries loan to make mortgage payments, your application will be given extra consideration if the mortgage holder to whom the proceeds of the fisheries loan will be paid is willing to make a concession on additional mortgage payments. Such a concession might be to make an equal amount of mortgage payments payable under the same terms and conditions as the fisheries loan itself.

(4) Qualified applications will be approved in the order of their receipt until available funds are exhausted.

*What must be included in applications.* [Since no application form is available, send the following information in the order indicated].

(1) *Personal.*

(a) Name

(b) Address.

(c) Telephone number.

(d) Marital status.

(e) Social security number.

(f) IRS taxpayer number.

(g) Biography. Include age, place of birth (proof of naturalization if naturalized), health, experience, references, operating history, accomplishments, etc. Be specific about what fishing vessels you owned or operated, what they fished for, when you owned or operated them, etc.

(h) Recent balance sheet for yourself. All personal debts must be disclosed, with the amount and frequency of repayment requirements. List acquisition cost and market value for all non-cash assets. All items must be described enough to permit our verification. Give names, addresses, and telephone numbers of each person you owe money to and each person who owes money to you.[1]

(i) Federal income tax returns for yourself for the last 3 years.[1]

(2) *Loan purpose.*

(a) Amount of loan requested (maximum is one year's debt service on mortgaged vessel).

(b) What loan will be used for (who it will be paid to and for what).

(c) Why a lesser amount would not be enough.

(d) Why the amount requested will reasonably assure your ability to continue in operation and repay the loan (be specific).

[1] If you own the vessel as a sole proprietor, you need send only your personal balance sheet and tax returns. If you own the vessel through a corporation or partnership, you must send both your personal balance sheet and tax returns and those for the corporation or partnership.

(e) Letters from two banks declining to loan the money you are requesting from the Fisheries Loan Fund Program.

(3) *Financial information.*

(a) Recent balance sheet for your vessel's business (this must be for the vessel whose mortgage is in jeopardy of default). All vessel debts must be disclosed, with the amount and frequency of repayments. List acquisition cost and market value for all non-cash assets. All items must be described enough to permit our verification. Give names, addresses, and telephone numbers of each person you owe money to and each person who owes you money.[1]

(b) Profit and loss statement for your vessel during last 12 months (this must be for the vessel whose mortgage is in jeopardy or default). Please be specific about all items of profit and loss.

(c) Federal income tax returns for your vessel business for the last 3 years.[1]

(d) Trip settlement sheets for the past 90 days (for the vessel whose mortgage is in jeopardy or default).

(e) Balance sheet for any other business you own.

(f) Name, address, and telephone number of your bookkeeper and your attorney.

(g) Name, address, and telephone number of the principal people who buy your vessel's catch and the principal people who sell supplies and services to your vessel.

(4) *Vessel information* (for the vessel whose mortgage is in jeopardy of default).

(a) Names, addresses, and phone numbers of mortgagees and present outstanding balance of each mortgage.

(b) Current U.S. Coast Guard form 1330 (certificate of ownership).

(c) Recent photograph of vessel (if available).

(d) Inventory of vessel equipment and description of vessel's rigging.

(e) Survey report for vessel.

(f) Type and amount of insurance carried on vessel (plus name, address, and telephone number of agent).

(g) Number of engine hours and date of last engine overhaul.

(h) Date of last vessel dry dock.

(i) Vessel acquisition cost and present market value.

(j) Complete disclosure of all lienable vessel debt.

(5) *Concessions.* Describe whatever concessions, if any, your vessel's mortgage holder or trade creditors are willing to make if your Fisheries Loan Fund application is approved. Include a letter from them stating their willingness to make the concession.

**List of Subjects in 50 CFR Part 250**

Fishing vessels, Loan program, Business.

(16 U.S.C. 742a–742k)

Dated: April 20, 1984.

Carmen J. Blondin,

*Deputy Assistant Administrator for Fisheries Resource Management, National Marine Fisheries Services.*

[FR Doc. 84-11296 Filed 4-25-84; 8:45 am]

BILLING CODE 3510-22-M

Federal Register

Thursday
April 26, 1984

## Part III

# Environmental Protection Agency

40 CFR Part 60

Standards of Performance for New Stationary Sources; Lime Manufacturing Plants; Final Rule

**ENVIRONMENTAL PROTECTION AGENCY**

**40 CFR Part 60**

**[AD-FRL 2506-8]**

## Standards of Performance for New Stationary Sources; Lime Manufacturing Plants

**AGENCY:** Environmental Protection Agency (EPA).

**ACTION:** Final rule.

**SUMMARY:** Amendments to the standards of performance for lime manufacturing plants were proposed in the Federal Register on September 2, 1982 (47 FR 38832). This action promulgates the amendments to the standards of performance for lime manufacturing plants, which were proposed on May 3, 1977. The standards apply to new, modified, and reconstructed rotary kilns for which construction was commenced after May 3, 1977. These standards implement Section 111 of the Clean Air Act and are based on a determination that lime manufacturing plants cause or contribute significantly to air pollution which may reasonably be anticipated to endanger public health or welfare. The intended effect of these standards is to require all new, modified, and reconstructed rotary kilns in lime manufacturing plants to control emission to the level achievable through use of the best demonstrated system of continuous emission reduction, considering costs, nonair quality health and environmental impacts, and energy requirements.

**EFFECTIVE DATE:** April 26, 1984.

Under Section 307(b)(1) of the Clean Air Act, judicial review of this new source performance standard is available only by the filing of a petition for review in the U.S. Court of Appeals for the District of Columbia Circuit within 60 days of today's publication of this rule. Under Section 307(b)(2) of the Clean Air Act, the requirements that are the subject of today's notice may not be challenged later in civil or criminal proceedings initiated to enforce these requirements.

**ADDRESSES:** *Background Information Document.* The background information document (BID) for the promulgated standards may be obtained from the U.S. EPA Library (MD-35), Research Triangle Park, North Carolina 27711, telephone number (919) 541-2777. Please refer to "Lime Manufacturing Plants—Background Information for Promulgated Standards" (EPA-450/3-84-008). The BID contains (1) a summary of all the public comments made on the proposed amended standards along with responses to the comments, and (2) a summary of the changes made to the standards since proposal.

*Docket.* Docket number A-80-53, containing information considered in development of the promulgated standards, is available for public inspection between 8:00 a.m. and 4:00 p.m., Monday through Friday, at EPA's Central Docket Section (LE-131), West Tower Lobby, Gallery 1, 401 M Street, SW., Washington, D.C. 20460. A reasonable fee may be charged for copying.

**FOR FURTHER INFORMATION CONTACT:** Mr. Robert Ajax, Standards Development Branch, Emission Standards and Engineering Division (MD-13), U.S. Environmental Protection Agency, Research Triangle Park, North Carolina 27711, telephone (919) 541-5624.

**SUPPLEMENTARY INFORMATION:**

### Background

New source performance standards for lime manufacturing plants were proposed on May 3, 1977. Final rules were promulgated on March 7, 1978. As promulgated, standards of performance for lime manufacturing plants limited particulate matter emissions from rotary lime kilns to no greater than 0.15 kilogram per megagram (kg/Mg) [0.30 pound per ton (lb/ton)] of limestone feed. The opacity of the exhaust gases from rotary lime kilns was limited to less than 10 percent. The particulate matter emission limit for any lime hydrator was 0.075 kg/Mg (0.15 lb/ton) of limestone feed.

The National Lime Association (NLA) filed a petition for review of the standards with the United States Court of Appeals for the District of Columbia Circuit. On May 19, 1980, the Court of Appeals remanded the standard. *National Lime Association* v. *EPA*, 627 F.2d 416 (D.C. Cir. 1980).

Following review of the standards, a response to the Court remand and a rule change were proposed in the Federal Register (47 FR 38832) on September 2, 1982. The proposed amendments to the standards raised the level of the emission limit for particulate emissions from rotary lime kilns from 0.15 kg/Mg (0.30 lb/ton) to 0.30 kg/Mg (0.60 lb/ton) of limestone feed. The visible emission limit for rotary lime kilns remained at 10 percent opacity. Finally, the emission limit for lime hydrators was deleted.

The proposed remand response clarified that although wet scrubbers were a demonstrated technology for control of rotary lime kiln emissions, they were not best demonstrated technology. Compared to the performance of fabric filters and ESP's, wet scrubber performance is more sensitive to variations in inlet dust concentration and particle size. In addition, the annual operating costs for a wet scrubber are significantly greater than those for a fabric filter or ESP designed to comply with the new source performance standards. This finding does not preclude the use of wet scrubbers because owners and operators of rotary kilns regulated by the standards may use control devices of their own choosing to comply with the standards.

### The Final Amendments

In response to public comments, changes have been made to the proposed amendments. The most significant changes are to the visible emission standard and the continuous monitoring requirement. The rationale for the changes is discussed in the Section entitled "Significant Comments and Changes to the Proposed Amendment."

The promulgated amendments apply the standards to new, modified, or reconstructed rotary lime kilns for which construction was commenced after May 3, 1977. Existing rotary lime kilns are not subject to the regulation unless modified or reconstructed (as defined in 40 CFR 60.14, or 60.15). The numerical emission limits of the promulgated standards reflect the performance of fabric filters and ESP's, which are considered best demonstrated technology for control of particulate matter emissions for rotary lime kilns. The promulgated standards limit emissions of particulate matter from each rotary lime kilns to 0.30 kg/Mg (0.60 lb/ton) of limestone feed. In addition, the definition of limestone feed is expanded to include the weight of iron-oxide additives used in the production of iron-bearing lime. The visible emission limit for rotary lime kilns is increased from 10 percent to 15 percent opacity.

For positive-pressure fabric filters, the promulgated standards permit the use of certified visible emission observers to monitor the opacity of exhaust gases from rotary lime kilns in lieu of continuous opacity monitoring. Visible emission observations, taken in accordance with Reference Method 9, must occur during normal operation of the rotary lime kiln, at least once per day of operation. Because a Reference Method 9 test is the method used to determine compliance with the control device visible emission standard, reports of such test from positive-

pressure fabric filters may be used to determine compliance with the control device visible emission standard. For negative-pressure fabric filters, however, continuous opacity monitors continue to be required.

Excess emission reports will be required on a semi-annual basis rather than on a quarterly basis.

### Summary of Environmental, Energy, and Economic Impacts

In remanding the new source performance standards in lime manufacturing plants, the Court did not question the original analysis of economic, energy, or environmental impacts. ["Standards Support and Environmental Impact Statement, Volume I: Proposed Standards of Performance for Lime Manufacturing Plants" (EPA-450/2-77-007a)]. These impacts were discussed during the original rulemaking and are still considered valid.

### Public Participation

To provide interested persons the opportunity for oral presentation of data, views, and arguments concerning the proposed amendments, a public hearing was held on November 18, 1982, at Research Triangle Park, North Carolina. The hearing was open to the public, and each attendee was given an opportunity to comment on the proposed amendments. Eleven speakers presented comments. The public comment period for written comments extended from September 2, 1982, to December 20, 1982. Thirteen written coments were received. The oral and written comments have been considered, and, where appropriate, changes have been made to the proposed amendments.

### Significant Comments and Changes to the Proposed Amendments

Comments on the proposed amendments were received from industry representatives, their trade association, and one individual. A detailed discussion of these comments and responses can be found in the background information document (BID) for the promulgated amendments referenced in the ADDRESSES section of this preamble. The summary of comments and responses in the BID serves as the basis for the changes that have been made to the proposed amendments. The major comments and responses are summarized in this preamble under the following headings: Rotary Lime Kiln Opacity Standard, Applicability Date, and Continuous Monitoring Requirement.

### Rotary Lime Kiln Opacity Standard

The majority of the lime industry's oral and written comments reflect their concern that the 10 percent visible emission limit for rotary lime kilns was not achievable. One commenter discussed his theory that unique properties of particulate matter generated in the lime kiln create hydrate particles prior to the fabric filter inlet. The commenter concludes that the hydrate particles will cause long-term variations in opacity of emissions at the fabric filter outlet, and a visible emission standard of 20 percent opacity should account for this variability. Another commenter asserted that the data used to develop the visible emission limit are invalid because the mass emission test data from Plants B, C, D, and E (which were taken simultaneously with the opacity data) are flawed. Consequently, the commenter believes these data do not demonstrate the achievability of the mass emission limit or the visible emission limit. Five commenters stated that they had test data that demonstrated that the visible emission limit was not achievable.

The commenter's study of rotary lime kiln dynamics does provide an indication that hydrate particles are formed prior to the fabric filter inlet. The study does not, however, include any data about particle characteristics or concentration at the fabric filter outlet. Nor does it include any Reference Method 9 data to substantiate the validity of informally-recorded visible emission obervations made at the fabric filter outlet. The absence of these types of data does not, in itself, invalidate the commenter's theory or conclusion. However, existing fabric filter theory and studies have demonstrated that particle characteristics and concentrations at fabric filter outlets are invariant over a broad range of fabric filter inlet particle characteristics and concentrations. Furthermore, the extensive data base supporting the visible emission standard (discussed below) covers the range of particle characteristics, concentrations, and kiln operations expected in the industry and demonstrates the achievability of a standard more stringent than that suggested by the commenter.

Moreover, while the commenter's study was being performed, the fabric filter controlling emissions from the kiln under study by the commenter was operated at air flows ranging from 27 to 62 percent greater than design values. This causes actual air-to-cloth ratios to be higher than design values. Thus, the bag filter will be under greater stress than that for which it was designed, and uncaking may occur, thereby resulting in an actual control efficiency that is less than the design control efficiency.

The acceptability of mass emission data from Plants B, C, D, and E was not at issue in the Court remand. It is important to note, however, that the acceptance of emission test data does not imply that the tests are completely free of minor errors. With the multiplicity of parameters, procedures, and physical tolerances used in each test, seldom is any test free of minor errors. This is the case with several of the tests in the data base supporting the mass emission limit. As explained in detail in the background information document, however, these minor errors are not significant, and they do not affect the accuracy or reliability of the mass emission test results. Therefore, both the mass emission data and the visible emission data are valid and support the promulgated amendments to the existing standard.

Of the five commenters who said they had data demonstrating that the visible emission limit was unachievable, none submitted the data during the public hearing or the public comment period. Written requests for Reference Method 9 visible emission data were sent to these commenters, but no data were received. One commenter submitted photographs of plumes and mass emission test data (some of which were collected in accordance with Reference Method 5) to illustrate visible emission problems with two fabric filters that control emissions from three rotary lime kilns. Although the kilns and fabric filters were not designed to meet the existing new source performance standards, the mass emission data indicated an emission rate substantially below the mass emission limit included in the standards. The opacity of the visible emissions, however, cannot be determined with accuracy from these photographs, and no Reference Method 9 visible emissions data were gathered to quantify the opacity of the visible emissions from these rotary lime kilns.

However, if the facility described above were subject to new source performance standards and experienced difficulty in complying with the visible emission limit for rotary lime kilns, a remedy is available if certain conditions are met. Section 60.11(e) of the General Provisions of 40 CFR Part 60, which applies to all standards of performance, ensures that this facility would be treated equitably. This provision may be used to obtain an individual visible emission limit tailored to the unique circumstances of a specific facility. To

obtain this standard, the affected facility must demonstrate with a performance test that it meets the mass emission limit; that the facility and associated air pollution control equipment were operated and maintained in a manner to minimize the opacity of emissions during the performance test; that the performance test was performed under conditions approved by the Administrator; and that the facility and associated air pollution control equipment were incapable of being adjusted or operated to meet the applicable opacity standard. The requirements of § 60.11(e) can be accomplished during the original compliance test. An individual visible emission limit is automatically approved upon demonstration of compliance with the above criterion and imposes no costs beyond those of the performance test.

In responding to the comments on the proposed visible emission limit, over 1,200 Reference Method 9 6-minute averages from six rotary lime kiln control device exhaust stacks used to develop this limit were reviewed. The review indicates that the data cover the variation of particle characteristics and normal operation likely to be found in the industry. These data were gathered simultaneously with Reference Method 5 mass emission tests and include runs where the mass emission level was as high as 0.29 kg/Mg (0.58 lb/ton). More than 71 percent of the Reference Method 9 visible emission data exhibit normalized opacities of 0 percent and 99.7 percent exhibit normalized opacities of less than 10 percent. The highest raw opacity data point was 6.7 percent, and only 4 of the over 1,200 data points exceeded 10 percent after normalization to a 3.0-meter stack diameter, with 10.6 percent as the maximum value. This data base differs in one respect from the data base on which the proposed visible emission standard was based. The one difference is that the data base now includes data submitted to the Agency in October 1983 by the Tenn-Luttrell Lime Company. The Tenn-Luttrell data show that the NSPS mass emission limit was achieved but that there were two 6-minute average opacities at 10.6 percent. On the basis of available data, including that from Tenn-Luttrell, and to ensure that the visible emission limit is achievable, the standard has been revised from 10 percent to 15 percent opacity.

### Applicability Date

Several lime manufacturing companies commented that the applicability date for the new source performance standards should be September 2, 1982, rather than May 3, 1977. These commenters believe that because there have been two proposals, the first of which is over 5 years old, and because the standard has been remanded, Section 111(a)(2) of the Clean Air Act requires that the applicability date be that of the later proposal. One commenter also argues that because wet scrubbers are not considered to be best demonstrated technology, maintaining the earlier date penalizes a company that must install venturi scrubbers because of space limitations. The commenter, therefore, asks that the promulgated amendments not apply to their wet scrubbers, which are being installed because of limited space.

Section 111(a)(2), of the Clean Air Act clearly states that "new sources" subject to new source performance standards are those sources which commence construction or modification after proposal of a standard of performance. New source performance standards for lime manufacturing plants were proposed on May 3, 1977 (42 FR 22506), and sources constructed or modified after that date are, therefore, new sources subject to the standard.

The fact that standards are remanded does not exempt those sources constructed or modified prior to the proposed remand response. *United States* v. *City of Painesville*, 644 F.2d 1186 (6th Cir. 1981), cert. den. 102 S.Ct. 392 (1981). Similarly, revision of standards to more accurately reflect the performance of best demonstrated technology in response to a remand does not exempt sources. *See, Portland Cement Association* v. *Train*, 513 F.2d 506 (D.C. Cir. 1975), cert. den. 423 U.S. 1025 (1975). Finally, the fact that promulgation is delayed until well after the original proposal does not, in itself, exempt sources. *See, Commonwealth of Pennsylvania* v. *EPA*, 618 F.2d 991, 1000 (3rd Cir. 1980). (See docket entry IV-B-4 for further discussion.)

An investigation of the rotary lime kilns and wet scrubbers installed at the plant citing space limitations reveals that the standards have not imposed any penalties. The costs of installing and operating the venturi scrubbers at this plant were actually less than those estimated and published with the proposed standards of performance. The relevant question, however, to answer in responding to this comment is whether limited space required the installation of wet scrubbers. Because the length of the new kilns installed at this plant was greater than the available space between the feedstock and product handling areas, the product handling area was moved to accommodate the new kilns and control devices. However, the product handling area was moved only far enough to accommodate wet scrubbers. If the handling area had been moved further, either fabric filters or ESP's could have been installed. Thus, even though the decision to install wet scrubbers may have been reasonable from the plant's point of view, wet scrubbers were not the only devices that could have been installed. In sum, a subcategory of sources that must install scrubbers and for which the standard would not reflect BDT does not exist.

### Continuous Monitoring Requirement

Several lime companies believe that transmissometers (required for visible emission monitoring) are unreliable and inaccurate. A representative from one lime company cited problems with an early type of transmissometer known as a Bailey Balometer. Representatives from another company cited problems with the instrument that records transmissometer readings to emphasize their belief that the monitoring system is unreliable.

Available information and data, however, demonstrate the reliability and accuracy of transmissometers for negative-pressure fabric filters over extended periods of time. These include extended service in environments such as portland cement kiln and boiler exhaust gas streams. The data indicate that, as long as the transmissometers were installed and monitored according to Performance Specification 1 contained in 40 CFR Part 60 Appendix B, reliability and accuracy were excellent.

The Bailey Balometer referred to by one commenter does not meet this performance specification and, thus, should not be installed to comply with the opacity monitoring requirements. After talking with representatives of the company experiencing data recording problems, these problems were traced to the choice of an inappropriate transmission frequency, which resulted in interference from other nearby equipment.

Transmissometers, however, are not practicable for positive-pressure fabric filters. There are technical problems with operating a single transmissometer to monitor the opacity of visible emissions exiting from these fabric filters. Since installation of transmissometers for each exit port of a positive-pressure fabric filter is economically unreasonable, another visible emission monitoring approach has been selected for these fabric filters. The final amendments permit positive-pressure fabric filters to be inspected visually during normal operation on a

daily basis and visible emission observations to be recorded (according to the procedures of Reference Method 9) for three 6-minute periods for each exit port exhibiting any visible emissions. Production rates within 10 to 15 percent of design capacity are considered to be normal operation. Because a Reference Method 9 test is the method used to determine compliance with the control device visible emission standard, reports of such tests from positive-pressure fabric filters may be used to determine compliance with the control device visible emission standard. This amendment does not apply to facilities using negative-pressure fabric filters or ESP's. These facilities must continue to install, operate, and maintain transmissometers.

### Information Requirements Impacts

The regulation will require no reports in addition to those required under the General Provisions of 40 CFR Part 60, except for those related to wet scrubber pressure drop and liquid flow rate, which are required in lieu of the visible emission requirements at facilities controlled by other types of equipment. The General Provisions contain notification requirements, which enable the Agency to keep abreast of facilities subject to the regulation; they contain requirements for the conduct and reporting of initial performance tests; and they require quarterly reports of excess emissions. However, excess emission reports will be required on a semi-annual basis rather than the quarterly basis specified in the General Provisions. Analysis of these reporting requirements indicates that they are both necessary and reasonable considering the savings in time and resources required for effective enforcement. In the absence of these reporting requirements, effective enforcement of the regulation would require frequent individual inspections and tests.

Information collection requirements associated with this regulation (those included in 40 CFR Part 60, Subparts A and HH) have been approved by the Office of Management and Budget (OMB) under the provisions of the Paperwork Reduction Act of 1980, 44 U.S.C. 3501 *et seq*, and have been assigned OMB Control Number 2060-0063.

### Regulatory Flexibility Analysis

This standard was proposed before January 1, 1981, and therefore is not subject to the requirements of the Regulatory Flexibility Act. This action, however, will not have significant impacts on small entities because it is a technical amendment to a standard that simply makes that standard conform to the capabilities of the control technologies on which the standard was based. In addition, it is less restrictive than the original proposal.

### Docket

The docket is an organized and complete file of all the information considered in the development of this rulemaking. The docket is a dynamic file, because material is added throughout the rulemaking development. The docket system is intended to allow members of the public and industries involved in the rulemaking to readily identify and locate documents so that they can effectively participate in the rulemaking process. Along with the statement of basis and purpose of the proposed and promulgated standards and responses to significant comments, the contents of the docket will serve as the record in case of judicial review, except for interagency review materials (Section 307(d)(7)(A)).

### Miscellaneous

The effective date of this regulation is April 26, 1984. Section 111 of the Clean Air Act provides that standards of performance of revisions thereof become effective upon promulgation and apply to affected facilities, construction or modification of which was commenced after the date of proposal.

The promulgation of these standards was preceded by a determination that these sources contribute significantly to air pollution which may reasonably be anticipated to endanger public health or welfare (42 FR 22510, May 3, 1977). In addition, publication of these promulgated standards was preceded by consultation with appropriate advisory committees, independent experts, and Federal departments and agencies in accordance with Section 117.

This regulation will be reviewed 4 years from the date of promulgation as required by the Clean Air Act. This review will include an assessment of such factors as the need for integration with other programs, the existence of alternative methods, enforceability, improvements in emission control technology, and reporting requirements.

Section 317 of the Clean Air Act requires the Administrator to prepare an economic impact assessment of "revisions (of new source performance standards) which the Administrator determines to be substantial * * *" [Section 317(a)]. This amendment is not substantial because it is a technical adjustment that simply makes the standard conform to the capabilities of the control technologies on which the original standard was based. Therefore, no economic impact assessment of the proposed amendment has been prepared. The Administrator prepared an economic analysis of the standard in the original rulemaking. The economic impacts are essentially as described in the original economic analysis. ["Standards Support and Environmental Impact Statement, Volume I: Proposed Standards of Performance for Lime Manufacturing Plants" (EPA-450/2-77-007a)]. However, the cost effectiveness of compliance with the final rotary kiln particulate matter mass emission standard has been evaluated. The incremental cost effectiveness of compliance with the NSPS instead of with a typical State implementation plan is $360/ton for a typical rotary kiln.

Under Executive Order 12291, a regulation considered "major" is subject to the requirement of a Regulatory Impact Analysis. This regulation is not "major" because: (1) The national annualized compliance costs, including capital charges resulting from the standards, total less than $100 million; (2) the amended standards do not cause a major increase in prices or production costs; and (3) the standards do not cause significant adverse effects on domestic competition, employment, investment, productivity, innovation, or competition in foreign markets. This regulation was submitted to the Office of Management and Budget (OMB) for review as required by Executive Order 12291.

### List of Subjects in 40 CFR Part 60

Air pollution control, Aluminum, Ammonium sulfate plants, Asphalt, Cement industry, Coal, Copper, Electric power plants, Glass and glass products, Grains, Intergovernmental relations, Iron, Lead, Metals, Metallic minerals, Motor vehicles, Nitric acid plants, Paper and paper products industry, Petroleum, Phosphate, Sewage disposal, Steel, Sulfuric acid plants, Waste treatment and disposal, Zinc, Tires, Incorporation by reference, Can surface coating, Sulfuric acid plants, Industrial organic chemicals, Organic solvent cleaners, Fossil fuel-fired steam generators, Fiberglass insulation, Synthetic fibers, Lime.

Dated: April 13, 1984.
William D. Ruckelshaus,
*Administrator.*

Regulation

## PART 60—[AMENDED]

Subpart HH, Part 60 of Chapter I, Title 40 of the Code of Federal Regulations is revised to read as follows:

### § 60.340 Applicability and designation of affected facility.

(a) The provisions of this subpart are applicable to each rotary lime kiln used in the manufacture of lime.

(b) The provisions of this subpart are not applicable to facilities used in the manufacture of lime at kraft pulp mills.

(c) Any facility under paragraph (a) of this section that commences construction or modification after May 3, 1977, is subject to the requirements of this subpart.

(Sec. 111, Clean Air Act, as amended (42 U.S.C. 7414))

### § 60.341 Definitions.

As used in this subpart, all terms not defined herein shall have the same meaning given them in the Act and in the General Provisions.

(a) "Lime manufacturing plant" means any plant which uses a rotary lime kiln to produce lime product from limestone by calcination.

(b) "Lime product" means the product of the calcination process including, but not limited to, calcitic lime, dolomitic lime, and dead-burned dolomite.

(c) "Positive-pressure fabric filter" means a fabric filter with the fans on the upstream side of the filter bags.

(d) "Rotary lime kiln" means a unit with an inclined rotating drum that is used to produce a lime product from limestone by calcination.

(e) "Stone feed" means limestone feedstock and millscale or other iron oxide additives that become part of the product.

### § 60.342 Standard for particulate matter.

(a) On and after the date on which the performance test required to be conducted by § 60.8 is completed, no owner or operator subject to the provisions of this subpart shall cause to be discharged into the atmosphere from any rotary lime kiln any gases which:

(1) Contain particulate matter in excess of 0.30 kilogram per megagram (0.60 lb/ton) of stone feed.

(2) Exhibit greater than 15 percent opacity when exiting from a dry emission control device.

(Sec. 114, Clean Air Act, as amended (42 U.S.C. 7414))

### § 60.343 Monitoring of emissions and operations.

(a) The owner or operator of a facility that is subject to the provisions of this subpart shall install, calibrate, maintain, and operate a continuous monitoring system, except as provided in paragraphs (b) and (c) of this section, to monitor and record the opacity of a representative portion of the gases discharged into the atmosphere from any rotary lime kiln. The span of this system shall be set at 40 percent opacity.

(b) The owner or operator of any rotary lime kiln using a positive-pressure fabric filter control device subject to the provisions of this subpart may, in lieu of the continuous monitoring requirement of § 60.343(a), monitor visible emissions at least once per day of operation by using a certified visible emissions observer who, for each site where visible emissions are observed, will perform and record three Method 9 tests on the gases discharged into the atmosphere.

(c) The owner or operator of any rotary lime kiln using a wet scrubbing emission control device subject to the provisions of this subpart shall not be required to monitor the opacity of the gases discharged as required in paragraph (a) of this section, but shall install, calibrate, maintain, operate, and record the resultant information from the following continuous monitoring devices:

(1) A monitoring device for the continuous measurement of the pressure loss of the gas stream through the scrubber. The monitoring device must be accurate within ±250 pascals (one inch of water).

(2) A monitoring device for continuous measurement of the scrubbing liquid supply pressure to the control device. The monitoring device must be accurate within ±5 percent of the design scrubbing liquid supply pressure.

(d) For the purpose of conducting a performance test under § 60.8, the owner or operator of any lime manufacturing plant subject to the provisions of this subpart shall install, calibrate, maintain, and operate a device for measuring the mass rate of stone feed to any affected rotary lime kiln. The measuring device used must be accurate to within ±5 percent of the mass rate over its operating range.

(e) For the purpose of reports required under § 60.7(c), periods of excess emissions that shall be reported are defined as all 6-minute periods during which the average opacity of the visible emissions from any lime kiln subject to paragraph (a) of this subpart is greater than 15 percent or, in the case of wet scrubbers, any period in which the scrubber pressure drop is greater than 30 percent below the rate established during the performance test. Reports of excess emissions recorded during observations made as required by § 60.344(c) shall be submitted semi-annually.

(Sec. 114, Clean Air Act, as amended (42 U.S.C. 7414))

(Approved by the Office of Management and Budget under Control Number 2060-0039)

### § 60.344 Test methods and procedures.

(a) Reference methods in Appendix A of this part, except as provided under § 60.8(b), shall be used to determine compliance with § 60.342(a) as follows:

(1) Method 1 for sample and velocity traverses;

(2) Method 2 for velocity and volumetric flow rate;

(3) Method 3 for gas analysis;

(4) Method 4 for stack gas moisture;

(5) Method 5 or 5D for the measurement of particulate matter; and

(6) Method 9 for visible emissions.

(b) For Method 5 or 5D, the sampling time for each run shall be at least 60 minutes, and the sampling rate shall be at least 0.85 std $m^3/h$, dry basis (0.53 dscf/min), except that shorter sampling times, when necessitated by process variables or other factors, may be approved by the Administrator.

(c) Visible emission observations of positive-pressure fabric filters shall occur during normal operation of the rotary lime kiln, at least once per day of operation. For at least three 6-minute periods, the opacity shall be recorded and maintained for any point(s) where visible emissions are observed, and the corresponding feed rate of the kiln shall also be recorded and maintained. These observations shall be taken in accordance with Method 9. Records shall be maintained of any 6-minute average that is in excess of the emissions limit specified in § 60.342(a) of this subpart.

(Sec. 114, Clean Air Act, as amended (42 U.S.C. 7414))

(Approved by the Office of Management and Budget under Control Number 2060-0063)

[FR Doc. 84-11316 Filed 4-25-84; 8:45 am]
BILLING CODE 6560-50-M

# Reader Aids

Federal Register
Vol. 49, No. 82
Thursday, April 26, 1984

## INFORMATION AND ASSISTANCE

### SUBSCRIPTIONS AND ORDERS

| | |
|---|---|
| Subscriptions (public) | 202-783-3238 |
| Problems with subscriptions | 275-3054 |
| Subscriptions (Federal agencies) | 523-5240 |
| Single copies, back copies of FR | 783-3238 |
| Magnetic tapes of FR, CFR volumes | 275-2867 |
| Public laws (Slip laws) | 275-3030 |

### PUBLICATIONS AND SERVICES

**Daily Federal Register**

| | |
|---|---|
| General information, index, and finding aids | 523-5227 |
| Public inspection desk | 523-5215 |
| Corrections | 523-5237 |
| Document drafting information | 523-5237 |
| Legal staff | 523-4534 |
| Machine readable documents, specifications | 523-3408 |

**Code of Federal Regulations**

| | |
|---|---|
| General information, index, and finding aids | 523-5227 |
| Printing schedules and pricing information | 523-3419 |

**Laws**

| | |
|---|---|
| Indexes | 523-5282 |
| Law numbers and dates | 523-5282 |
| | 523-5266 |

**Presidential Documents**

| | |
|---|---|
| Executive orders and proclamations | 523-5230 |
| Public Papers of the President | 523-5230 |
| Weekly Compilation of Presidential Documents | 523-5230 |

| | |
|---|---|
| **United States Government Manual** | 523-5230 |

**Other Services**

| | |
|---|---|
| Library | 523-4986 |
| Privacy Act Compilation | 523-4534 |
| TDD for the deaf | 523-5229 |

## FEDERAL REGISTER PAGES AND DATES, APRIL

13001-13098 ..... 2
13099-13332 ..... 3
13333-13464 ..... 4
13465-13670 ..... 5
13671-13860 ..... 6
13861-14076 ..... 9
14077-14290 ..... 10
14291-14494 ..... 11
14495-14716 ..... 12
14717-14920 ..... 13
14921-15050 ..... 16
15051-15174 ..... 17
15175-15536 ..... 18
15537-16752 ..... 19
16753-16980 ..... 20
16981-17430 ..... 23
17431-17720 ..... 24
17721-17930 ..... 25
17931-18080 ..... 26

## CFR PARTS AFFECTED DURING APRIL

At the end of each month, the Office of the Federal Register publishes separately a list of CFR Sections Affected (LSA), which lists parts and sections affected by documents published since the revision date of each title.

**3 CFR**

**Administrative Orders**

**Presidential Determinations:**
No. 84-5 of March 26, 1984 ..... 15175
No. 84-6 of April 3, 1984 ..... 15177
No. 84-7 of April 9, 1984 ..... 15179

**Executive Orders:**
11476 Revoked by EO 12473 ..... 17152
11888 (Amended by EO 12471) ..... 13101
12002 (See EO 12470) ..... 13099
12046 (Amended by EO 12472) ..... 13471
12214 (See EO 12470) ..... 13099
12260 (Amended by EO 12474) ..... 15539
12413 (Amended by EO 12471) ..... 13101
12470 ..... 13099
12471 ..... 13101
12472 ..... 13471
12473 ..... 17152
12474 ..... 15539

**Proclamations:**
4707 (Amended by EO 12471) ..... 13101
4768 (Amended by EO 12471) ..... 13101
5170 ..... 13129
5171 ..... 13465
5172 ..... 13467
5173 ..... 13469
5174 ..... 14291
5175 ..... 14293
5176 ..... 14295
5177 ..... 15051
5178 ..... 15053
5179 ..... 15055
5180 ..... 15057
5181 ..... 15059
5182 ..... 15061
5183 ..... 15537
5184 ..... 16753
5185 ..... 16981

**4 CFR**

52 ..... 17721

**5 CFR**

340 ..... 17722
733 ..... 17431

**Proposed Rules:**
930 ..... 14956
950 ..... 14752

**7 CFR**

29 ..... 16755
225 ..... 14077
226 ..... 14077
275 ..... 14495
280 ..... 13861
301 ..... 13131, 17723
318 ..... 14717
331 ..... 14717
418 ..... 15541
421 ..... 13132
425 ..... 14718
440 ..... 13671
447 ..... 14078
510 ..... 13668
631 ..... 13133
713 ..... 13479
729 ..... 14282, 15063
795 ..... 14718
905 ..... 17931
907 ..... 13481, 14921
908 ..... 14719, 17733
910 ..... 13675, 13861, 14720, 14921, 16979
916 ..... 17003
917 ..... 17003
925 ..... 14083
944 ..... 14083
979 ..... 15541
989 ..... 13133
1036 ..... 14297
1040 ..... 15181, 17734
1910 ..... 16983
1924 ..... 16983
1941 ..... 15063, 16983
1942 ..... 13862
1943 ..... 15063
1945 ..... 15063, 16983, 17734
1951 ..... 16983
1955 ..... 16983
1980 ..... 15063, 16983

**Proposed Rules:**
53 ..... 13704
54 ..... 13704
68 ..... 17005
800 ..... 13148, 14958, 17009, 17950
907 ..... 14360
908 ..... 14360
927 ..... 17950
981 ..... 14112
989 ..... 13883
1004 ..... 13541
1007 ..... 16799
1030 ..... 14511, 16803
1033 ..... 13541
1036 ..... 13541
1040 ..... 13543
1049 ..... 13541
1062 ..... 13541
1064 ..... 13541
1065 ..... 13541

1098 ... 16799
1124 ... 13887
1747 ... 15211
1930 ... 15212
1944 ... 15212
1951 ... 15212
1965 ... 15212

**8 CFR**

100 ... 13134, 14298, 16760
103 ... 13134, 15182
214 ... 15182
238 ... 15542, 16760

**9 CFR**

81 ... 13863
166 ... 14495
318 ... 14856
319 ... 14856
327 ... 14497
**Proposed Rules:**
113 ... 14288
114 ... 14288
308 ... 14636
318 ... 14636
320 ... 14636
327 ... 14636, 14963
381 ... 14636, 14963

**10 CFR**

1 ... 16760
2 ... 14698
50 ... 14698

**12 CFR**

5 ... 15068
201 ... 15543
226 ... 13482, 17932
265 ... 15543
614 ... 16761
615 ... 16761
619 ... 16761
**Proposed Rules:**
Ch. II ... 15563
5 ... 15089, 17764
12 ... 15089
561 ... 17516
563 ... 17516
570 ... 17516
584 ... 17516
701 ... 17951
704 ... 17953
741 ... 17951

**13 CFR**

101 ... 16761, 17433
107 ... 13864
121 ... 13675
125 ... 17433
**Proposed Rules:**
102 ... 17516
107 ... 14764

**14 CFR**

39 ... 13486–13488, 14498–14500, 14922, 14923, 16762–16764, 16986
71 ... 13333, 13334, 13489, 14501, 14502, 14924–14926, 15184, 17434, 17735
73 ... 17434
75 ... 14927
91 ... 14842
93 ... 13676
97 ... 14928
107 ... 14842
108 ... 14842
109 ... 14842
121 ... 14842
135 ... 14842
171 ... 15544
199 ... 14930
241 ... 14298
298 ... 14085
1214 ... 17736
**Proposed Rules:**
Ch. I ... 17767
36 ... 13375
39 ... 13543, 13545
47 ... 13375
71 ... 13545, 14966–14973
91 ... 13375, 17768
121 ... 14692
255 ... 13156

**15 CFR**

303 ... 17739
368–399 ... 13099
369 ... 14930
371 ... 16988
385 ... 13135
399 ... 13135, 14087, 15185, 17932
920 ... 14720
924 ... 13335
925 ... 14720
929 ... 13335
935 ... 13335
936 ... 13335
937 ... 13335
938 ... 13335

**16 CFR**

13 ... 13676, 14087, 15547
305 ... 13136
436 ... 13677
1115 ... 13820
1145 ... 14095
**Proposed Rules:**
13 ... 17013
455 ... 17517
1500 ... 17956
1700 ... 13888

**17 CFR**

1 ... 17747
12 ... 14721, 15069, 17750
200 ... 13678, 13865, 16765
230 ... 13336
240 ... 13867
**Proposed Rules:**
1 ... 15222
3 ... 13378
4 ... 13378
33 ... 15222
140 ... 13378
240 ... 15222

**18 CFR**

3 ... 17751
35 ... 16765
154 ... 14301, 16989, 17435, 17437, 17752
157 ... 14301, 17435, 17752
270 ... 17439
271 ... 14302, 17439, 17934
282 ... 17935
301 ... 16765
375 ... 14301, 17435, 17752
381 ... 14301, 17435, 17437, 17752
389 ... 17752
**Proposed Rules:**
35 ... 14384, 14395
271 ... 14974

**19 CFR**

18 ... 13490
101 ... 15070, 17442–17444
111 ... 17753
141 ... 17753
162 ... 13492
171 ... 17754
201 ... 14502
204 ... 14502
207 ... 14502
271 ... 13337
**Proposed Rules:**
Ch. II ... 13379
4 ... 17769
101 ... 17771
134 ... 17772
141 ... 16803
143 ... 16803
145 ... 16803
147 ... 16803
172 ... 16803
175 ... 15568
177 ... 16803, 17518
271 ... 13378

**20 CFR**

404 ... 13872, 16805
416 ... 13872
**Proposed Rules:**
404 ... 13710
416 ... 15225, 17016

**21 CFR**

1 ... 13338
5 ... 14931–14937, 17936
10 ... 14723
14 ... 17446
73 ... 13137
74 ... 13138, 13339
81 ... 13138, 13339–13344
82 ... 13138, 13339
101 ... 13338, 13679, 15510
105 ... 15510
136 ... 13690
155 ... 15071
156 ... 15071
175 ... 13138
177 ... 13138
178 ... 13345
182 ... 13139
184 ... 13139, 13346
193 ... 17148
201 ... 14303
310 ... 14303
430 ... 15071
436 ... 15071
440 ... 15071
442 ... 13492
450 ... 15071
455 ... 15071
510 ... 13493, 16766
520 ... 14103, 14331
522 ... 13872
529 ... 13483
546 ... 14103
555 ... 15071
556 ... 13872
558 ... 13142, 13348, 13494, 14505, 16766
561 ... 17149
610 ... 15186
620 ... 15186
630 ... 15186
640 ... 15186
650 ... 15186
660 ... 15186
680 ... 15186
860 ... 14505
**Proposed Rules:**
100 ... 13157
107 ... 14396
131 ... 13713
133 ... 17017, 17018
155 ... 15568, 17519
158 ... 15568
161 ... 13157, 16807
179 ... 14974
182 ... 13157, 17966
184 ... 13157, 17966
331 ... 14908
332 ... 14908
886 ... 17523

**22 CFR**

7 ... 16989
8 ... 16989
13 ... 16989
14 ... 16989
31 ... 16989
51 ... 16989
171 ... 16989
301 ... 13692
502 ... 13693

**23 CFR**

635 ... 14728
652 ... 14729
**Proposed Rules:**
650 ... 17039
810 ... 17968

**24 CFR**

201 ... 14332, 14335, 17936
203 ... 14336
234 ... 14336
511 ... 16936
880 ... 17447
881 ... 17447
882 ... 14729
883 ... 17447
884 ... 17447
886 ... 17447
1800 ... 17937
**Proposed Rules:**
203 ... 14113
213 ... 14113
234 ... 14113
235 ... 14113

**26 CFR**

1 ... 14729
31 ... 13143
51 ... 15187
150 ... 15187
301 ... 15074
**Proposed Rules:**
1 ... 13157, 17040, 17973

**27 CFR**

6 ... 14939
18 ... 14939
19 ... 14939
47 ... 14939

55 ... 14939
170 ... 14939
178 ... 14939
179 ... 14939
194 ... 14939
196 ... 14939
197 ... 14939
211 ... 14939
213 ... 14939
231 ... 14939
240 ... 14939
245 ... 14939
250 ... 14939
251 ... 14939
252 ... 14939
270 ... 14939
275 ... 14939
290 ... 14939
295 ... 14939
296 ... 14939

29 CFR

511 ... 14729
1601 ... 13873
1952 ... 16766
2619 ... 14730
Proposed Rules:
530 ... 17974
1910 ... 13380, 14116, 15093, 17541, 17545
1917 ... 15093
1928 ... 13714
1952 ... 16813

30 CFR

250 ... 17449
913 ... 13494
917 ... 14731
935 ... 14735, 16990
936 ... 14674
938 ... 16776
942 ... 13349, 15496
Proposed Rules:
904 ... 13157
913 ... 13380
914 ... 13891
916 ... 15228
934 ... 13158
935 ... 13159
938 ... 14402, 17974
942 ... 13546
944 ... 17040
946 ... 17975

31 CFR

6 ... 14943
8 ... 14943
10 ... 15188
103 ... 13548
129 ... 14054
224 ... 14339
Proposed Rules
1 ... 14403
210 ... 17546

32 CFR

380 ... 17937
701 ... 13350, 16777
706 ... 151188–15190
835 ... 14741
840 ... 13521
880 ... 16777
888 ... 13521
889 ... 13522
930 ... 16777
931 ... 16777
932 ... 16777
959 ... 16777
968 ... 16777
Proposed Rules:
199 ... 17976
841 ... 14532
865 ... 13382, 16819

33 CFR

100 ... 13522, 14506, 17937
117 ... 17450, 17939, 17940
165 ... 13695, 13696, 17941
167 ... 15547
Proposed Rules:
100 ... 13715, 14536, 14537 17977
110 ... 13160
117 ... 15573
159 ... 14765
166 ... 14538
181 ... 14538
183 ... 14538
207 ... 14540
401 ... 13551

34 CFR

222 ... 17496
503 ... 14072
Proposed Rules:
309 ... 16960
320 ... 16970
614 ... 16932

36 CFR

61 ... 14890
216 ... 16991
223 ... 14103
Proposed Rules:
13 ... 13160, 15482
50 ... 13387

37 CFR

1 ... 13462
5 ... 13462
201 ... 14944
Proposed rules:
1 ... 17692

38 CFR

17 ... 15548
36 ... 13350, 13553
Proposed Rules:
21 ... 13892
36 ... 15573

39 CFR

10 ... 15548
233 ... 15191
601 ... 13352, 16778
3001 ... 14340

40 CFR

35 ... 14341
52 ... 13144, 13145, 13522, 15549, 15550, 16778, 17497, 17756
60 ... 13646, 13874–13878 18076
61 ... 13658, 13875–13878
62 ... 14741
81 ... 13145, 13352, 16780, 17757
124 ... 17716
145 ... 13525, 15552, 15553
162 ... 17758
171 ... 17759
180 ... 14343, 15192, 17144–17147, 17759, 17760
270 ... 17716
271 ... 13526, 13697, 14344
461 ... 13879
465 ... 14104
600 ... 13832
Proposed Rules:
52 ... 13174, 13893, 14145, 14404, 15229, 17547, 17772–17776
60 ... 13392, 13654
65 ... 14975, 15230
66 ... 17041
81 ... 14541
86 ... 14244
100 ... 14244
140 ... 14765
180 ... 15231, 15232, 17978
264 ... 16819
265 ... 16819
271 ... 13716
439 ... 17978
721 ... 14768
763 ... 15094

41 CFR

14-2 ... 13353
101-17 ... 14105
101-41 ... 14105
Proposed Rules:
101-41 ... 14147

42 CFR

400 ... 14954
420 ... 13698
435 ... 13526
436 ... 13526
460 ... 14954
462 ... 14954
Proposed Rules:
474 ... 15233
476 ... 14977

43 CFR

4 ... 13353
3500 ... 17892
3510 ... 17892
3520 ... 17892
3540 ... 17892
3550 ... 17892
3560 ... 17892
Public Land Orders:
6528 ... 15193, 16994
6529 ... 14107
6530 ... 17502
Proposed Rules:
4 ... 17043

44 CFR

64 ... 13879, 15078, 17761
65 ... 15193, 17761
67 ... 13353, 15194, 16781, 17762

Proposed Rules:
67 ... 15240, 17777

45 CFR

5b ... 14107
1180 ... 14108
Proposed Rules:
1601 ... 15575

46 CFR

148 ... 16794
310 ... 13364
500 ... 16994
502 ... 16994
503 ... 16994
504 ... 16994
505 ... 16994
547 ... 16994
Proposed Rules:
502 ... 17043, 17044

47 CFR

Ch. I ... 13366
0 ... 13366, 14506, 15197
2 ... 15079
67 ... 14111
69 ... 14742
73 ... 13370, 13371, 13534, 14345, 14346, 14507, 14742, 15079–15082, 15554–15559 17942, 17948
74 ... 14346, 14507
81 ... 17503
83 ... 17503
87 ... 15083
90 ... 17505
Proposed Rules:
1 ... 17045
2 ... 14986, 17045
15 ... 17045
21 ... 17045
22 ... 17045
23 ... 17045
25 ... 14768
68 ... 17045
73 ... 14541–14546, 15095–15097, 15581–15584, 16820, 17045, 17979, 17980
74 ... 14986
76 ... 17045
81 ... 17045
83 ... 17045
90 ... 14771, 17045
94 ... 17045
95 ... 17045

48 CFR

Ch. 1 ... 13881
Ch. 3 ... 13960
Ch. 7 ... 13236
Ch. 14 ... 14252

49 CFR

1 ... 14510, 14954
29 ... 15197
172 ... 14353
173 ... 14353
450 ... 15560
451 ... 15560
452 ... 15560
453 ... 15560
1105 ... 15086, 15087,
1152 ... 14955, 15086, 15087, 17002
1160 ... 15205
1165 ... 15207
1180 ... 15083
1310 ... 13881
Proposed Rules:
Ch. VII ... 13719
173 ... 14405

175 ..... 13717
394 ..... 13555
571 ..... 14771, 15241
1245 ..... 15098

**50 CFR**

17 ..... 14354
23 ..... 13538
250 ..... 18072
280 ..... 15209
602 ..... 13372
611 ..... 14356
655 ..... 13373, 17512
671 ..... 13373

**Proposed Rules:**

17 ..... 13556, 13558, 13720, 14149, 14152, 14406, 14771, 15099-15109, 17548, 17555, 17981
25 ..... 17778
28 ..... 17778
29 ..... 17778
222 ..... 17781
227 ..... 17981
611 ..... 14994
628 ..... 17056
630 ..... 15585
649 ..... 14153
650 ..... 17982
654 ..... 14547
658 ..... 14547
663 ..... 14994

## List of Public Laws

**Note:** No public bills which have become law were received by the Office of the Federal Register for inclusion in today's **List of Public Laws.**

**Last List April 25, 1984**