1-7-87
Vol. 52 No. 4
Pages 517-660

federal register

Wednesday
January 7, 1987

Briefings on How To Use the Federal Register—
For information on briefings in Washington, DC, Portland, OR, Los Angeles, CA, and San Diego, CA, see announcement on the inside cover of this issue.

FEDERAL REGISTER Published daily, Monday through Friday, (not published on Saturdays, Sundays, or on official holidays), by the Office of the Federal Register, National Archives and Records Administration, Washington, DC 20408, under the Federal Register Act (49 Stat. 500, as amended; 44 U.S.C. Ch. 15) and the regulations of the Administrative Committee of the Federal Register (1 CFR Ch. I). Distribution is made only by the Superintendent of Documents, U.S. Government Printing Office, Washington, DC 20402.

The **Federal Register** provides a uniform system for making available to the public regulations and legal notices issued by Federal agencies. These include Presidential proclamations and Executive Orders and Federal agency documents having general applicability and legal effect, documents required to be published by act of Congress and other Federal agency documents of public interest. Documents are on file for public inspection in the Office of the Federal Register the day before they are published, unless earlier filing is requested by the issuing agency.

The **Federal Register** will be furnished by mail to subscribers for $340.00 per year, or $170.00 for 6 months, payable in advance. The charge for individual copies is $1.50 for each issue, or $1.50 for each group of pages as actually bound. Remit check or money order, made payable to the Superintendent of Documents, U.S. Government Printing Office, Washington, DC 20402.

There are no restrictions on the republication of material appearing in the **Federal Register.**

Questions and requests for specific information may be directed to the telephone numbers listed under INFORMATION AND ASSISTANCE in the READER AIDS section of this issue.

How To Cite This Publication: Use the volume number and the page number. Example: 52 FR 12345.

THE FEDERAL REGISTER
WHAT IT IS AND HOW TO USE IT

FOR: Any person who uses the Federal Register and Code of Federal Regulations.

WHO: The Office of the Federal Register.

WHAT: Free public briefings (approximately 2 1/2 hours) to present:

1. The regulatory process, with a focus on the Federal Register system and the public's role in the development of regulations.
2. The relationship between the Federal Register and Code of Federal Regulations.
3. The important elements of typical Federal Register documents.
4. An introduction to the finding aids of the FR/CFR system.

WHY: To provide the public with access to information necessary to research Federal agency regulations which directly affect them. There will be no discussion of specific agency regulations.

WASHINGTON, DC

WHEN: January 29; at 9 am.

WHERE: Office of the Federal Register, First Floor Conference Room, 1100 L Street NW., Washington, DC.

RESERVATIONS: Mildred Isler 202-523-3517

PORTLAND, OR

WHEN: February 17; at 9 am.

WHERE: Bonneville Power Administration Auditorium, 1002 N.E. Holladay Street, Portland, OR.

RESERVATIONS: Call the Portland Federal Information Center on the following local numbers:

Portland	503-221-2222
Seattle	206-442-0570
Tacoma	206-383-5230

LOS ANGELES, CA

WHEN: February 18; at 1:30 pm.

WHERE: Room 8544, Federal Building, 300 N. Los Angeles Street, Los Angeles, CA.

RESERVATIONS: Call the Los Angeles Federal Information Center, 213-894-3800

SAN DIEGO, CA

WHEN: February 20; at 9 am.

WHERE: Room 2S31, Federal Building, 880 Front Street, San Diego, CA.

RESERVATIONS: Call the San Diego Federal Information Center, 619-293-6030

Contents

Federal Register
Vol. 52, No. 4
Wednesday, January 7, 1987

Alcohol, Tobacco and Firearms Bureau
RULES
Alcohol, tobacco, and other excise taxes:
Electronic fund transfer for alcohol and tobacco tax payments, 530

Army Department
NOTICES
Agency information collection activities under OMB review, 570
Meetings:
Military personal property symposium, 570
Science Board, 570

Commerce Department
See International Trade Administration; National Oceanic and Atmospheric Administration

Committee for the Implementation of Textile Agreements
NOTICES
Cotton, wool, and man-made textiles:
Philippines; correction, 568

Commodity Futures Trading Commission
NOTICES
Meetings:
CFTC-State Cooperation Advisory Committee, 568
Nondiscrimination on basis of handicap in federally conducted programs and activities, 569

Defense Department
See also Army Department
NOTICES
Federal Acquisition Regulation (FAR):
Agency information collection activities under OMB review, 570

Economic Regulatory Administration
NOTICES
Natural gas exportation and importation:
Border-to-Border Pipeline Co., 571
CanadianOxy Marketing, Inc., 571

Energy Department
See also Economic Regulatory Administration; Federal Energy Regulatory Commission
RULES
Powerplant and industrial fuel use:
New facilities; cogeneration exemption, 658
NOTICES
Meetings:
National Petroleum Council, 578
National Environmental Policy Act; implementation, 659

Environmental Protection Agency
PROPOSED RULES
Air quality implementation plans; delayed compliance orders:
Missouri, 562
Pesticide chemicals in or on raw agricultural commodities; tolerances and exemptions, etc.:
Ammonium nitrate and urea, 563
NOTICES
Pesticide programs:
Cyanazine; intent to cancel, 589
Registration data requirements; toxicology data call-in for antimicrobial pesticides, 595
Registration standards—
Availability, etc., 588
Toxic and hazardous substances control:
Premanufacture notices receipts; correction, 656

Federal Aviation Administration
RULES
Aircraft products and parts, certification; and airworthiness standards:
Beech—
Special conditions for use of advanced composite materials for primary flight structure, etc.; correction, 656
Airworthiness directives:
Boeing, 517, 518
(2 documents)
British Aerospace, 519
Cessna, 520
Collins Avionics Division/Rockwell International, 521
SAAB-Fairchild, 523
Short Brothers, PLC, 523
Control zones, 524, 525
(2 documents)
Transition areas, 525
PROPOSED RULES
Airworthiness directives:
Beech, 551
Boeing, 552
Cessna, 554
McDonnell Douglas, 557
Control zones, 559, 560
(2 documents)
Transition areas, 558
NOTICES
Advisory circulars; availability, etc.:
Aircraft; maximum weight increases, landing weight, or zero fuel weight; substantiation, 653
Organization, functions, and authority delegations:
Ontario, CA, 653

Federal Communications Commission
NOTICES
Radio and television broadcasting:
Comparative licensing, distress sales and tax certificate policies premised on racial, ethnic, or gender classifications, 596

Federal Deposit Insurance Corporation
NOTICES
Agency information collection activities under OMB review, 600

Federal Energy Regulatory Commission
NOTICES
Electric rate and corporate regulation filings:
Arkansas Power & Light Co. et al., 571

Environmental statements; availability, etc.:
F. & T. Services Corp. et al., 575
Hydroelectric applications, 580
Natural gas certificate filings:
Southern Natural Gas Co. et al., 584
Natural Gas Policy Act:
Well category determinations, etc., 575
Preliminary permits surrender:
Index, WA, 579
Upper San Joaquin River Water & Power Authority, 580
Small power production and cogeneration facilities; qualifying status:
McKittrick CoGen, Inc., et al., 575
Applications, hearings, determinations, etc.:
Algonquin Gas Transmission Co., 576
Bayou Interstate Pipeline System, 577
Chevron U.S.A. Inc., 577
Cockrell Oil Corp., 577
Crystal Oil Co., 578
Fisher, Robert, Mr. & Mrs., 578
George R. Brown Partnership, 586
High Chapparal Oil Co., 578
Kentucky West Virginia Gas Co., 578
Tenneco Oil Co., 579
TXO Production Corp., 579
Yukon Pacific Corp., 587

Federal Highway Administration
NOTICES
Environmental statements; notice of intent:
Hartford County, CT, 653

Federal Reserve System
PROPOSED RULES
Bank holding companies and change in bank control (Regulation Y):
Real estate investment activities, 543
NOTICES
Applications, hearings, determinations, etc.:
Bank of Tokyo, Ltd., 601
Massey, John, 601
Merchants National Corp. et al., 602
Old Town Bancshares Corp., 601
United Security Bancorporation, 602

Federal Retirement Thrift Advisory Board
NOTICES
Meetings:
Employee Thrift Advisory Council, 602

Federal Trade Commission
RULES
Prohibited trade practices:
Detroit Auto Dealers Association, Inc., et al.; correction, 656

Financial Management Service
See Fiscal Service

Fiscal Service
NOTICES
Interest rates:
Renegotiation Board and prompt payment rates, 655

Food and Drug Administration
RULES
Animal drugs, feeds, and related products:
Tylosin, 530
Food additives:
Paper and paperboard components—
Diethylene glycol dibenzoate in polyvinyl acetate coatings, 527
PROPOSED RULES
Medical devices:
Ear, nose, and throat devices—
Classification; correction, 656
Premarket notification exemptions; correction, 656
NOTICES
Biological products:
Surrogate testing for non-A, non-B hepatitis; Anti-Hbc and ALT testing; workshop, 603
Food for human consumption:
Water, bottled, 603

General Services Administration
RULES
Federal Information Resources Management Regulation:
ADP equipment; Paperwork Reduction Reauthorization Act; implementation; correction, 656
NOTICES
Federal Acquisition Regulation (FAR):
Agency information collection activities under OMB review, 570

Geological Survey
NOTICES
Agency information collection activities under OMB review, 609

Health and Human Services Department
See Food and Drug Administration; Health Resources and Services Administration; Public Health Service

Health Resources and Services Administration
NOTICES
Meetings; advisory committees:
January, 603

Indian Affairs Bureau
NOTICES
Irrigation projects; operation and maintenance charges:
Fort Hall Irrigation Project, ID, 606

Interior Department
See Geological Survey; Indian Affairs Bureau; Land Management Bureau; Mines Bureau; Surface Mining Reclamation and Enforcement Office

International Trade Administration
NOTICES
Export privileges, actions affecting:
Randin, Pierre Andre, 565
Meetings:
President's Export Council, 566
Applications, hearings, determinations, etc.:
Masters, Mates & Pilots MATES Program; correction, 656

International Trade Commission
NOTICES
Import investigations:
Canada, free trade area; possible economic effect, 612
Dynamic random access memories, components, and products containing same, 610
Fresh cut flowers from Canada, Chile, Colombia, Costa Rica, Ecuador, Israel, Kenya, Mexico, The Netherlands, and Peru, 610

Indomethacin, 610, 611
(2 documents)
Industrial phosphoric acid from Belgium and Israel, 612
Porcelain-on-steel cooking ware from—
Spain, 613

Interstate Commerce Commission
RULES
Tariffs and schedules:
Independently filed rail carrier rates; short notice effectiveness, 536
PROPOSED RULES
Tariffs and schedules:
Short notice effectiveness for independently filed—
Rail carrier rates, 564
NOTICES
Railroad operation, acquisition, construction, etc.:
Chicago & North Western Transportation Co., 613
Maryland Midland Railway, Inc., 614
Walking Horse & Eastern Railroad Co., Inc., 614

Land Management Bureau
NOTICES
Coal leases, exploration licenses, etc.:
Alabama, 608
Realty actions, sales, leases, etc.:
Oklahoma, 608
Withdrawal and reservation of lands:
Idaho, 607

Mines Bureau
NOTICES
Agency information collection activities under OMB review, 609

National Aeronautics and Space Administration
NOTICES
Environmental statements; availability, etc.:
Galileo and Ulysses missions, 614
Federal Acquisition Regulation (FAR):
Agency information collection activities under OMB review, 570
Meetings:
Aeronautics Advisory Committee, 615

National Highway Traffic Safety Administration
NOTICES
Motor vehicle theft prevention standard; exemption petitions, etc.:
Volvo Cars of North America, 654
New car assessment program; optional crash test program for motor vehicle manufacturers, 654

National Oceanic and Atmospheric Administration
RULES
Fishery conservation and management:
Atlantic mackerel, squid, and butterfish, 537
NOTICES
Permits:
Marine mammals, 567, 568
(5 documents)

Nuclear Regulatory Commission
PROPOSED RULES
Production and utilization facilities; domestic licensing:
Power reactors, full participation emergency preparedness exercises; timing requirements prior to receipt of operating license, 543
NOTICES
Regulatory agreements:
Illinois; republication, 618
Applications, hearings, determinations, etc.:
Commonwealth Edison Co., 615
Met-Chem Testing Laboratories of Utah, Inc., 616
Yankee Atomic Power Co., 617

Public Health Service
See also Food and Drug Administration; Health Resources and Services Administration
NOTICES
Group health plans for State and local government employees; continuation coverage requirements, 604

Railroad Retirement Board
RULES
Missing children, official use of penalty mail in location and recovery, 526
NOTICES
Privacy Act; systems of records, 632

Securities and Exchange Commission
NOTICES
Self-regulatory organizations; proposed rule changes:
Chicago Board Options Exchange, Inc., et al., 633
National Association of Securities Dealers, Inc., 634
Pacific Clearing Corp., 634
Pacific Securities Depository Trust Co., 635
(2 documents)
Pacific Stock Exchange, Inc., 636
Philadelphia Depository Trust Co., 637
Philadelphia Stock Exchange, Inc., 638
Applications, hearings, determinations, etc.:
American Express Credit Corp., 639
American International Life Assurance Co. of New York et al., 640
Atlantic Financing Corp., 638
Continental Illinois Holding Corp., 641
Lifetime Money Market Trust et al., 643
Morgan Stanley Group Inc., 644
Shearson Lehman Asset Allocation Fund L.P. et al., 647
Wicklow 1986 Fund, 649

State Department
NOTICES
Bridge permit application:
El Paso, TX, 652
Meetings:
International Telegraph and Telephone Consultative Committee, 652

Surface Mining Reclamation and Enforcement Office
RULES
Permanent program submission:
Missouri, 534
PROPOSED RULES
Permanent program submission:
Ohio, 561
NOTICES
Agency information collection activities under OMB review, 609

Textile Agreements Implementation Committee
See Committee for the Implementation of Textile Agreements

Transportation Department
See Federal Aviation Administration; Federal Highway Administration; National Highway Traffic Safety Administration

Treasury Department
See also Alcohol, Tobacco and Firearms Bureau; Fiscal Service
NOTICES
Agency information collection activities under OMB review, 655

Separate Parts In This Issue

Part II
Department of Energy, 658

Reader Aids
Additional information, including a list of public laws, telephone numbers, and finding aids, appears in the Reader Aids section at the end of this issue.

CFR PARTS AFFECTED IN THIS ISSUE

A cumulative list of the parts affected this month can be found in the Reader Aids section at the end of this issue.

10 CFR
503 658
Proposed Rules:
50 543

12 CFR
Proposed Rules:
225 543

14 CFR
21 656
23 656
39 (7 documents) 517-523
71 (3 documents) 524, 525
Proposed Rules:
39 (4 documents) 551-557
71 (3 documents) 558-560

16 CFR
13 656

20 CFR
364 526

21 CFR
176 527
558 530
Proposed Rules:
874 (2 documents) 656
878 656
886 656

27 CFR
19 530
25 530
240 530
250 530
251 530
270 530
275 530
285 530

30 CFR
925 534
Proposed Rules:
935 561

40 CFR
Proposed Rules:
65 562
180 563

41 CFR
201-24 656

49 CFR
1312 536
Proposed Rules:
1312 564

50 CFR
655 537

Rules and Regulations

Federal Register
Vol. 52, No. 4
Wednesday, January 7, 1987

This section of the FEDERAL REGISTER contains regulatory documents having general applicability and legal effect, most of which are keyed to and codified in the Code of Federal Regulations, which is published under 50 titles pursuant to 44 U.S.C. 1510.
The Code of Federal Regulations is sold by the Superintendent of Documents. Prices of new books are listed in the first FEDERAL REGISTER issue of each week.

DEPARTMENT OF TRANSPORTATION

Federal Aviation Administration

14 CFR Part 39

[Docket No. 86-NM-227-AD; Amdt. 39-5509]

Airworthiness Directives; Boeing Model 737 Series Airplanes

AGENCY: Federal Aviation Administration (FAA), DOT.

ACTION: Final rule.

SUMMARY: This amendment adopts a new airworthiness directive (AD), applicable to certain Boeing Model 737 series airplanes, that requires inspection of the forward service door aft frame and repair, if necessary. This amendment is prompted by reports of cracks on four airplanes in the door stop support structure at the two uppermost door stops of the forward galley doorway aft frame. This condition, if not corrected, could lead to loss of pressurization, substantial structural damage, and possible loss of the door.

EFFECTIVE DATE: January 23, 1987.

ADDRESSES: The applicable service information may be obtained from the Boeing Commercial Airplane Company, P.O. Box 3707, Seattle, Washington 98168. This information may be examined at the FAA, Northwest Mountain Region, 17900 Pacific Highway South, Seattle, Washington, or the Seattle Aircraft Certification Office, 9010 East Marginal Way South, Seattle, Washington.

FOR FURTHER INFORMATION CONTACT: Mr. James W. Hart, Jr., Manager, Airframe Branch, ANM-120S; telephone (206) 431-1920. Mailing address: FAA, Northwest Mountain Region, 17900 Pacific Highway South, C-68966, Seattle, Washington.

SUPPLEMENTARY INFORMATION: Recently, an operator of a Boeing Model 737 airplane reported extensive cracking of the door stop support structure at the two uppermost door stop locations at the forward galley doorway aft frame. Cracking of the doorway frame web was found at both the upper and lower edges of the stop fitting. Further inspections determined that the frame web was nearly severed. Cracking was also visible on the stringers comprising the intercostal. Similar damage has been reported on three other airplanes. This condition, if not corrected, could lead to loss of the door support structural integrity and consequent loss of pressurization, substantial structural damage, and possible loss of the door.

The FAA has reviewed and approved Boeing Alert Service Bulletin 737-53A1108, dated December 15, 1986, which describes procedures for inspection and repair of the forward service door aft frame.

Since this condition is likely to exist or develop on other airplanes of the same type design, this AD requires inspection and repairs, if necessary, in accordance with the Boeing Alert Service Bulletin previously mentioned.

Since a situation exists that requires immediate adoption of this regulation, it is found that notice and public procedure hereon are impracticable, and good cause exists for making this amendment effective in less than 30 days.

The FAA has determined that this regulation is an emergency regulation that is not considered to be major under Executive Order 12291. It is impracticable for the agency to follow the procedures of Order 12291 with respect to this rule since the rule must be issued immediately to correct an unsafe condition in aircraft. It has been further determined that this document involves an emergency regulation under DOT Regulatory Policies and Procedures (44 FR 11034; February 26, 1979). If this action is subsequently determined to involve a significant/major regulation, a final regulatory evaluation or analysis, as appropriate, will be prepared and placed in the regulatory docket (otherwise, an evaluation is not required).

List of Subjects in 14 CFR Part 39

Aviation safety, Aircraft.

Adoption of the Amendment

PART 39—[AMENDED]

Accordingly, pursuant to the authority delegated to me by the Administrator, the Federal Aviation Administration amends § 39.13 of Part 39 of the Federal Aviation Regulations (14 CFR 39.13) as follows:

1. The authority citation for Part 39 continues to read as follows:

Authority: 49 U.S.C. 1354(a), 1421 and 1423; 49 U.S.C. 106(g) (Revised Pub. L. 97-449, January 12, 1983); and 14 CFR 11.89.

2. By adding the following new airworthiness directive:

Boeing: Applies to all Model 737 series airplanes, except the T43 series, certificated in any category. Compliance required as indicated. To ensure structural integrity of the forward galley door support structure, accomplish the following, unless previously accomplished:

A. Prior to the accumulation of 25,000 landings or within the next 125 landings after the effective date of this AD, whichever occurs later, perform a close visual inspection of the forward service doorway aft frame in accordance with Boeing Alert Bulletin 737-53A1108 dated December 15, 1986, or later FAA-approved revision. Repeat the inspections at intervals not to exceed 250 landings until the inspection required by paragraph B., below, is accomplished. If cracks are found, prior to further flight, perform a visual inspection for cracks in the intercostals and stringers, which support these door stops. Parts found cracked must be repaired prior to further flight in accordance with an FAA-approved method.

B. Prior to the accumulation of 25,000 landings or within the next 4,500 landings after the effective date of this AD, whichever occurs later, perform an internal visual inspection for cracks in the intercostals and stringers, which support these door stops, in accordance with Boeing Alert Service Bulletin 737-53A1108 dated December 15, 1986, or later FAA-approved revision. Parts found cracked must be repaired before further flight in accordance with an FAA-approved method. Repeat the inspection at intervals not to exceed 9,000 landings.

C. The repetitive inspections required by paragraph B. above, may be terminated after incorporation of a modification approved by the Manager, Seattle Aircraft Certification Office, FAA, Northwest Mountain Region.

D. An alternate means of compliance or adjustment of the compliance time, which provides an acceptable level of safety and which has the concurrence of an FAA Principal Maintenance Inspector, may be used when approved by the Manager, Seattle

Aircraft Certification Office, FAA, Northwest Mountain Region.

E. Special flight permits may be issued in accordance with FAR 21.197 and 21.199 to operate airplanes to a base for the accomplishment of inspections and/or modifications required by this AD.

All persons affected by this directive who have not already received the appropriate service information from the manufacturer may obtain copies upon request to the Boeing Commercial Airplane Company, P.O. Box 3707, Seattle, Washington 98124-2207. This information may be examined at the FAA, Northwest Mountain Region, 17900 Pacific Highway South, Seattle, Washington, or the Seattle Aircraft Certification Office, 9010 East Marginal Way South, Seattle, Washington.

This amendment becomes effective January 23, 1987.

Issued in Seattle, Washington, on December 30, 1986.

Frederick M. Isaac,

Acting Director, Northwest Mountain Region.

[FR Doc. 87-221 Filed 1-6-87; 8:45 am]

BILLING CODE 4910-13-M

---

14 CFR Part 39

[Docket No. 86-NM-175-AD; Amdt. 39-5506]

Airworthiness Directives; Boeing Models 737-100 and 737-200 Series Airplanes

AGENCY: Federal Aviation Administration (FAA), DOT.

ACTION: Final rule.

SUMMARY: This amendment adopts a new airworthiness directive (AD), applicable to certain Boeing Model 737 airplanes, which requires replacement of certain underwing fuel tank access covers with stronger, fire-resistant covers. This action is prompted by one incident of cover penetration which resulted in a fire and total loss of the airplane.

EFFECTIVE DATE: February 9, 1987.

ADDRESSES: The applicable service information, when issued, may be obtained from the Boeing Commercial Airplane Company, P.O. Box 3707, Seattle, Washington 98124. This information may be examined at the FAA, Northwest Mountain Region, 17900 Pacific Highway South, Seattle, Washington, or the Seattle Aircraft Certification Office, 9010 East Marginal Way South, Seattle, Washington.

FOR FURTHER INFORMATION CONTACT: Mr. William M. Perrella, Airframe Branch, ANM-120S; telephone (206) 431-1922. Mailing address: FAA, Northwest Mountain Region, 17900 Pacific Highway South, C-68966, Seattle, Washington 98168.

SUPPLEMENTARY INFORMATION: A proposal to amend Part 39 of the Federal Aviation Regulations to include an airworthiness directive which requires certain fuel tank access covers to be replaced by improved types with more impact resistance, was published in the **Federal Register** on September 2, 1986 (51 FR 31134). The comment period for the proposal closed on October 20, 1986.

Interested persons have been afforded an opportunity to participate in the making of this amendment. Due consideration has been given to the comments received.

The Air Transport Association (ATA) of America requested extension of the compliance time to allow cover installation at least one year after receipt of a service bulletin and parts from the manufacturer. The FAA expects this final rule to become effective concurrent with the release of the Boeing service bulletin on this subject. Production of parts is anticipated to begin about the same time. Therefore, the FAA has determined that the compliance time of one year, as proposed, is an appropriate amount of time for operators to receive the service bulletin and accomplish the required installation.

One operator requested the compliance time be extended to two years based on his engine maintenance program. While properly maintained engines should not suffer the failure experienced in Manchester, England, there is, nevertheless, a remote possibility that such a failure could occur. Since the modification is relatively easy, the FAA has determined that a compliance period of one year will not impose an undue burden on operators. In the interest of safety, considering the potential effect of cover plate failure, the FAA considers a two-year period to represent an unacceptable exposure time.

Several comments were received from the United Kingdom Civil Aviation Authority (CAA), which agreed that the AD was necessary. In addition, it had some reservations about the level of impact resistance specified in the proposed rule and, further, stated that additional covers, which are in the engine or tire burst zones, should be included. This latter concern was expressed by one operator as well. The FAA does not fully agree. The level of impact resistance specified in the rule is considered more than adequate to prevent penetration by a failed combustion chamber, as well as other debris of moderate velocity and energy. Some rare engine failure modes result in high energy debris, against which no practical design measures can protect. As to increasing the number of covers, the FAA has reviewed the service experience on the Model 737 and finds no substantiation of an unsafe condition at other locations. Nevertheless, the FAA has determined that an improvement in impact resistance is warranted and a proposed change to FAR 121 is being considered which would require all transport aircraft to install impact resistant covers in areas susceptible to damage.

Comments were also received from the National Transportation Safety Board (NTSB), which supported the AD.

After careful review of the available data, including the comments noted above, the FAA has determined that air safety and the public interest require the adoption of the rule as proposed.

It is estimated that 396 airplanes of U.S. registry will be affected by this AD, and that approximately 16 manhours per airplane will be required to replace the affected covers. Based on an estimated replacement cost of $500 per cover and an average labor cost of $40 per manhour, the total cost impact of this AD to U.S. operators is estimated to be $1,045,440.

For the reasons discussed above, the FAA has determined that this regulation is not considered to be major under Executive Order 12291 or significant under DOT Regulatory Policies and Procedures (44 FR 11034; February 26, 1979); and it is further certified under the criteria of the Regulatory Flexibility Act that this rule will not have a significant economic impact on a substantial number of small entities because few, if any, Boeing Model 737 airplanes are operated by small entities. A final evaluation has been prepared for this regulation and has been placed in the docket.

List of Subjects in 14 CFR Part 39

Aviation safety, Aircraft.

Adoption of the Amendment

PART 39—[AMENDED]

Accordingly, pursuant to the authority delegated to me by the Administrator, the Federal Aviation Administration amends § 39.13 of Part 39 of the Federal Aviation Regulations as follows:

1. The authority citation for Part 39 continues to read as follows:

Authority: 49 U.S.C. 1354(a), 1421 and 1423; 49 U.S.C. 106(g) (Revised Pub. L. 97-449, January 12, 1983); and 14 CFR 11.89.

2. By adding the following new airworthiness directive:

Boeing: Applies to all Models 737-100 and 737-200 series airplanes, certificated in any category. To minimize the hazard of lower wing surface fuel tank access cover penetration due to impact from low energy engine debris, accomplish the following, unless already accomplished.

A. Within the next year after the effective date of this AD, replace the lower wing surface fuel tank access covers located immediately inboard and outboard of each engine (total of four per airplane), with covers having impact resistance equivalent to that of 2024-T3 aluminum 0.140-inch thick, as approved by the Manager, Seattle Aircraft Certification Office, FAA, Northwest Mountain Region. The replacement covers must also be fire resistant, as defined in the Federal Aviation Regulations, Part 1.

B. An alternate means of compliance or adjustment of the compliance time, which provides an acceptable level of safety, may be used when approved by the Manager, Seattle Aircraft Certification Office, FAA, Northwest Mountain Region.

C. Special flight permits may be issued in accordance with FAR 21.197 and 21.199 to operate airplanes to a base for the accomplishment of the modifications required by this AD.

This amendment becomes effective February 9, 1987.

Issued in Seattle, Washington, on December 29, 1986.

Frederick M. Isaac,

Acting Director, Northwest Mountain Region.

[FR Doc. 87-222 Filed 1-6-87; 8:45 am]

BILLING CODE 4910-13-M

---

14 CFR Part 39

[Docket No. 86-CE-36-AD; Amdt. 39-5504]

Airworthiness Directives; British Aerospace (BAe) Model 3101 Jetstream Airplanes

AGENCY: Federal Aviation Administration (FAA), DOT.

ACTION: Final rule.

SUMMARY: This amendment adopts a new Airworthiness Directive (AD), applicable to certain BAe Model 3101 Jetstream series airplanes, which requires the removal and replacement of certain BAe modified fuel, hydraulic, and water methanol system valves. These valves have been found to fail by shearing off the top of the spindle, resulting in the inability to operate the valve in critical flight conditions. The actions of this AD will preclude fuel, hydraulic, and methanol system failure and possible loss of the airplane.

DATES: Effective Date: February 17, 1987.

Compliance: Required within 600 hours time-in-service (TIS) after the effective date of this AD, unless already accomplished.

ADDRESSES: BAe Mandatory Service Bulletin (MSB) 28-JA850911 dated June 13, 1986, which incorporates HiTemp Service Bulletin HTE 4925/1-SB-1 dated August 19, 1985, applicable to this AD may be obtained from British Aerospace plc, Manager, Product Support, Civil Aircraft Division, Prestwick Airport, Ayrshire, KA9 2RW, Scotland; or British Aerospace, Inc., Librarian, Box 17414, Dulles International Airport, Washington, DC 20041; or the Rules Docket at the address below. A copy of this information is also contained in the Rules Docket, FAA, Office of the Regional Counsel, Room 1558, 601 East 12th Street, Kansas City, Missouri 64106.

FOR FURTHER INFORMATION CONTACT: Mr. Ted Ebina, Aircraft Certification Staff, AEU-100, Europe, Africa, and Middle East Office, FAA, c/o American Embassy, Brussels, B-1000 Belgium; Telephone (322) 513.38.30; or Mr. Harvey A. Chimerine, FAA, ACE-109, 601 East 12th Street, Kansas City, Missouri 64106; Telephone (816) 374-6932.

SUPPLEMENTARY INFORMATION: A proposal to amend Part 39 of the Federal Aviation Regulations to include an AD requiring the removal and replacement of certain BAe modified fuel, hydraulic, and water methanol system valves on certain BAe Model 3101 Jetstream airplanes was published in the **Federal Register** on September 2, 1986 (51 FR 31135). The proposal resulted from in service experience by the manufacturer of the HiTemp HTE 1-inch actuated ball valves, that valve spindle HTE Part Number (P/N) 4925-005 is understrength and that the top of the spindle can shear off, resulting in the valve failing to operate in critical flight conditions. Consequently, British Aerospace issued BAe MSB 28-JA850911 dated June 13, 1986, which requires the modification of the valves in accordance with HTE SB 4925/1-SB-1 by removing the HTE P/N 4925-005 and replacing it with a larger diameter, increased strength valve spindle HTE P/N 4925-013.

The Civil Airworthiness Authority of the United Kingdom (CAA-UK), which has responsibility and authority to maintain the continuing airworthiness of these airplanes in the United Kingdom, classified this service bulletin and the actions recommended therein by the manufacturer as mandatory to assure the continued airworthiness of the affected airplanes.

On airplanes operated under United Kingdom registration, this action has the same effect as an AD on airplanes certified for operation in the United States. The FAA relies upon the certification of the CAA-UK combined with FAA review of pertinent documentation in finding compliance of the design of these airplanes with the applicable United States airworthiness requirements and the airworthiness and conformity of products of this design certificated for operation in the United States.

The FAA examined the available information related to the issuance of BAe MSB 28-JA850911 dated June 13, 1986, which incorporates HiTemp SB HTE 4925/1-SB-1 dated August 19, 1985, and the mandatory classification of this service bulletin by the CAA-UK, and concluded that the condition addressed by BAe Mandatory Service Bulletin (MSB) 28-JA850911 dated June 13, 1986, which incorporates HiTemp Service Bulletin HTE 4925/1-SB-1 dated August 19, 1985, was an unsafe condition that may exist on other airplanes of this type certificated for operation in the United States. Accordingly, the FAA proposed an amendment to Part 39 of the FAR to include an AD on this subject.

Interested persons have been afforded an opportunity to comment on the proposal. No comments or objections were received on this proposal or the FAA determination of the related cost to the public. Accordingly, the proposal is adopted with minor editorial corrections. The FAA has determined that this regulation involves 23 airplanes at an approximate one-time cost of $480 for each airplane.

The cost of compliance with the AD is so small that the expense of compliance will not be a significant financial impact on any small entities operating these airplanes.

Therefore, I certify that this action (1) is not a "major rule" under Executive Order 12291; (2) is not a "significant rule" under DOT Regulatory Policies and Procedures (44 FR 11034; February 26, 1979); and (3) will not have a significant economic impact on a substantial number of small entities under the criteria of the Regulatory Flexibility Act. A copy of the final evaluation prepared for this action is contained in the regulatory docket. A copy of it may be obtained by contacting the Rules Docket at the location provided under the caption "**ADDRESSES**".

List of Subjects in 14 CFR Part 39

Air transportation, Aviation safety, Aircraft, Safety.

Adoption of the Amendment

PART 39—[AMENDED]

Accordingly, pursuant to the authority delegated to me by the Administrator, the Federal Aviation Administration amends § 39.13 of Part 39 of the FAR as follows:

1. The authority citation for Part 39 continues to read as follows:

Authority: 49 U.S.C. 1354(a), 1421 and 1423; 49 U.S.C. 106(g) (Revised, Pub. L. 97-449, January 12, 1983); and 14 CFR 11.89.

2. By adding the following new AD:

British Aerospace: Applies to Model 3101 Jetstream (S/N 642 to 646, 648 to 655, 657, 658, and 660 to 666 inclusive) airplanes certificated in any category.

Compliance: Required within 600 hours time-in-service (TIS) after the effective date of this AD, unless already accomplished.

To ensure operation of fuel/hydraulic and water methanol system valves during critical flight operations, accomplish the following:

(a) Modify the HiTemp Valves Part Number (P/N) HTE 4925-001 as follows:

(1) Gain access to the valves in accordance with Section 2. "ACCOMPLISHMENT INSTRUCTIONS", paragraph A "PREPARATION", in British Aerospace (BAe) S/B 28-JA850911 dated June 13, 1986.

(2) Replace valve spindles P/N 4925-005 with strengthened spindles P/N 4925-013 in HiTemp Model HTE 1" Actuated Ball Valves in accordance with Section 2. "ACCOMPLISHMENT INSTRUCTIONS" in HiTemp SB HTE 4925/1-SB-1 dated August 19, 1985, on those valves located as follows:

(i) Fuel System—left and right LP cocks at wing leading edges outboard of the engines, and crossfeed cock on fuselage center section.

(ii) Hydraulic System—left and right LP cocks in the hydraulic installations below fuselage center section.

(iii) Water Methanol System (if fitted)—stop valves in the left and right main landing gear bays.

(3) Carry out functional tests of the valves in accordance with Section 2. "ACCOMPLISHMENT INSTRUCTIONS", paragraph B "ACCOMPLISHMENT", in BAe S/B 28-JA850911 dated June 13, 1986.

(b) Aircraft may be flown in accordance with Federal Aviation Regulation 21.197 to a location where this AD can be accomplished.

(c) An equivalent means of compliance with this AD may be used if approved by the Manager, Aircraft Certification Staff, AEU-100, Europe, Africa, and Middle East Office, FAA, c/o American Embassy, B-1000, Brussels, Belgium.

All persons affected by this directive may obtain a copy of the document referred to herein upon request to British Aerospace plc, Manager, Product Support Civil Aircraft Division, Prestwick Airport, Ayrshire, KA9 2RW, Scotland; or British Aerospace, Inc., Librarian, Box 17414, Dulles International Airport, Washington, DC 20041; or FAA, Office of the Regional Counsel, Room 1558, 601 East 12th Street, Kansas City, Missouri 64106.

This amendment becomes effective on February 17, 1987.

Issued in Kansas City, Missouri, on December 24, 1986.

Edwin S. Harris,

Director, Central Region.

[FR Doc. 87-223 Filed 1-6-87; 8:45 am]

BILLING CODE 4910-13-M

---

14 CFR Part 39

[Docket No. 86-CE 73-AD; Amdt. 39-5503]

Airworthiness Directives; Cessna 120, 140, 150, F150, 170, 172, F172, FR172, P172, 175, 177, 180, 182, 185, A185, 190, 195, 205, 206, P206, TP206, U206, TU206, 207, T207, 210, T210, 336, 337, and T337 Series Airplanes

AGENCY: Federal Aviation Administration (FAA), DOT.

ACTION: Final rule.

SUMMARY: This amendment adopts a new Airworthiness Directive (AD) applicable to Cessna 120, 140, 150, F150, 170, 172, F172, FR172, P172, 175, 177, 180, 182, 185, A185, 190, 195, 205, 206, P206, TP206, U206, TU206, 207, T207, 210, T210, 336, 337, and T337 series airplanes which requires inspection of the shoulder harness for the pilot/co-pilot seat to determine if the upper adjuster has a wire spring installed. If the spring has been installed, it must be removed to prevent possible shoulder harness slippage which could result in injury to the pilot or co-pilot in the event of an accident.

DATES: Effective Date: January 6, 1987.

Compliance: As prescribed in the body of the AD.

ADDRESSES: Copies of Cessna Single Engine Service Bulletin, SEB 86-8, and Multi-Engine Service Bulletin MEB 86-22 both dated November 21, 1986, applicable to this AD may be obtained from Cessna Aircraft Company, Customer Service, P.O. Box 1521, Wichita, Kansas 67201. A copy of this information is also contained in the Rules Docket, Office of the Regional Counsel, Room 1558, 601 East 12th Street, Kansas City, Missouri 64106.

FOR FURTHER INFORMATION CONTACT: Douglas W. Haig, Aerospace Engineer, FAA, ACE-120W, Wichita Aircraft Certification Office, 1801 Airport Road, Room 100, Wichita, Kansas 67209; Telephone (316) 946-4409.

SUPPLEMENTARY INFORMATION: Cessna designed add-on shoulder harness assemblies for the pilot/co-pilot seats in certain Cessna airplanes in the form of accessory kits which called out an adjuster on the upper end which would allow shoulder harness slippage. Both lower and upper adjusters have retainer springs. However, the orientation of the upper adjuster to the remainder of the system is such that the retainer springs will not allow the belt webbing to lock in place. This can lead to slipping of the shoulder harness when forward loads are applied during heavy braking or emergency landings. Slippage of the shoulder harness during these conditions could permit the occupant's head to strike the control wheel and/or instrument panel causing severe injury or even death. Removal of the retainer spring eliminates this unsafe condition. It should be noted that Cessna Service Information Letters SEB 86-8 and MEB 86-22, both dated November 21, 1986, require removal of the retainer springs on both the upper and lower adjusters. The installation of the springs in the lower adjuster does not constitute an unsafe condition. Therefore, removal of the spring from the lower adjuster is not a requirement of this AD.

Since the FAA has determined that the unsafe condition described herein is likely to exist or develop in other airplanes of the same type design, an AD is being issued requiring inspection for retainer springs in the upper adjusters on shoulder harness assemblies installed per Cessna Accessory Kits (AK) and removal of such springs, if installed, on Cessna 120, 140, 150, F150, 170, 172, F172, FR172, P172, 175, 177, 180, 182, 185, A185, 190, 195, 205, 206, P206, TP206, U206, TU206, 207, T207, 210, T210, 336, 337, and T337 series airplanes. Because an emergency condition exists that requires the immediate adoption of this regulation, it is found that notice and public procedure hereon are impractical and contrary to the public interest, and good cause exists for making this amendment effective in less than 30 days.

The FAA has determined that this regulation is an emergency regulation that is not major under section 8 of Executive Order 12291. It is impracticable for the agency to follow the procedures of Order 12291 with respect to this rule since the rule must be issued immediately to correct an unsafe condition in aircraft. It has been further determined that this document involves an emergency regulation under DOT Regulatory Policies and Procedures (44 FR 11034; February 26, 1979). If this action is subsequently determined to involve a significant regulation, a final regulatory evaluation or analysis, as appropriate, will be prepared and placed in the regulatory docket (otherwise, an evaluation is not

required). A copy of it, when filed, may be obtained by contacting the Rules Docket under the caption "**ADDRESSES**" at the location identified.

List of Subjects 14 CFR Part 39

Air transportation, Aviation safety, Aircraft, Safety.

Adoption of the Amendment

PART 39—[AMENDED]

Accordingly, pursuant to the authority delegated to me by the Administrator, the Federal Aviation Administration amends § 39.13 of Part 39 of the FAR as follows:

1. The authority citation for Part 39 continues to read as follows:

Authority: 49 U.S.C. 1354(a), 1421 and 1423; 49 U.S.C. 106(g)(Revised, Pub. L. 97-449, January 12, 1983); and 14 CFR 11.89.

2. By adding the following new AD:

Cessna: Applies to the following airplanes certified in any category:

Models	Serial Nos.
120, 140	All.
140A	All.
150	7001 thru 17,999; 59001 thru 59018.
150A, 150B, 150C, 150D, 150E, 150F, 150G, 150H,150J, 150K, 150L.	15059019 thru 15072003.
F150F, F150G, F150H	F150-0001 thru F150-0529.
F150K	F15000530 thru F15000658.
170,170A, 170B	All.
172,172A	28,000 thru 29,999,36,000 thru 36,999,46,001 thru 47,746.
172B, 172C, 172D, 172E, 172F, 172G, 172H, 172I,172J, 172K.	17247747 thru 17259223.
F172D, F172E, F172F, F172G.	F172-0001 thru F172-0654
F172H, F172K	F17200655 thru F17200754.
FR172E, FR172F, FR172G	FR17200001 thru FR17200225.
P172	All.
175, 175A, 175B, 175C	All.
177, 177A, 177B	17700001 thru 17701530.
180, 180A	30000 thru 32999.
180A, 180B, 180C	50,000 thru 50911.
180D, 180E, 180F, 180G, 180H.	18050912 thru 18052175.
182, 182A, 182B	33,000 thru 34999.
182C	51,001 thru 53,007.
182D, 182E, 182F 182G, 182H, 182J,182K, 182L, 182M, 182N.	18253008 thru 18260445.
185, 185A, 185B 185C, 185D, 185E, A185E.	185-0001 thru 185-1599.
A185E	18501600 thru 18501832.
190, 195, 195A, 195B	All.
205, 205A	All.
206	All.
U206, U206A, U206B, U206C, U206D, TU206A,TU206B, TU206C, TU206D.	206-0276 thru 206-1444.
U206E, TU206E	20601445 thru 20601587.
P206, P206A, P206B, P206C, P206D, TP206A, TP206B, TP206C,TP206D.	P206-0001 thru P206-0603.
P206E, TP206E	P20600604 thru P20600647.
207, T207	2070001 thru 20700190.
210	57001 thru 57575.
210A, 210B, 210C, 210D, 210E, 210F, 210G, 210H,210J, 210K, T210K.	21057576 thru 21059351.
T210G, T210H, T210J	All.
336	All.
337, 337A, 337B, 337C, 337D, 337E, T337B, T337C, T337, T337E.	33700001 thru 33701316.

Compliance: Required within the next 25 hours time-in-service (TIS) after theeffective date of this AD, unless already accomplished.To prevent slippage of the pilot/co-pilot shoulder harnesses, accomplish thefollowing on airplanes which have had the shoulder harnesses installed by anyof the following Cessna Accessory Kits (AK):

AK140-10	AK182-75	AK210-173
AK150-7	AK195-10	AK210-174
AK150-121	AK210-77	AK336-32
AK170-10	AK210-93	AK336-36
AK177-10	AK210-171	
AK336-103	AK210-172	

(a) Inspect the upper shoulder harness adjuster in accordance with Cessna Single Engine Service Bulletin, SEB86-8 or Cessna Multi-Engine Service Bulletin, MEB86-22, as appropriate, for the presence of a retainer spring. If installed, prior to further flight, remove the spring and stamp out the -401 identification number in accordance with the service bulletin instructions.

Note.—There are two adjusters in each shoulder harness assembly. This AD applies only to the upper adjuster.

(b) Airplanes may be flown in accordance with FAR 21.197 to a location where this AD may be accomplished.

(c) The holder of a pilot certificate issued under Part 61 of the Federal Aviation Regulations (FAR) on any airplane owned or operated by him may conduct the inspections and modifications required by this AD on any airplane not used in air carrier service. The person accomplishing this AD must make the appropriate maintenance record entry as prescribed by FAR 91.173.

(d) Any equivalent method of compliance with this AD, if used, must be approved by the Manager, Wichita Aircraft Certification Office, Federal Aviation Administration, 1801 Airport Road, Room 100, Wichita, Kansas 67209; Telephone (316) 946-4400.

All persons affected by this directive may obtain copies of the documents referred to herein upon request to Cessna Aircraft Company, Customer Service, P. O. Box 1521, Wichita, Kansas 67201; or FAA, Office of the Regional Counsel, Room 1558, 601 East 12th Street,

This amendment becomes effective January 6, 1987.

Issued in Kansas City, Missouri on December 22, 1986.

Edwin S. Harris,

Director, Central Region.

[FR Doc. 87-224 Filed 1-6-87; 8:45 am]

BILLING CODE 4910-13-M

14 CFR Part 39

[Docket No. 86-CE-72-AD; Amendment 39-5502]

Airworthiness Directives; Collins Avionics Division/Rockwell International Model 51RV-4 VOR/ILS Navigation Receiver, Part Number 622-3255-XXX

AGENCY: Federal Aviation Administration (FAA), DOT.

ACTION: Final rule.

SUMMARY: This amendment adopts a new Airworthiness Directive (AD) 86-25-01, applicable to Collins Avionics Division/Rockwell International Model 51RV-4 VOR/ILS Navigation Receiver, Part Number 622-3255-XXX, and codifies the corresponding emergency AD letter dated December 5, 1986, into the **Federal Register**. This AD requires modification of all affected receivers to remove excessive ripple from the output deviation line.

DATES: Effective Date: January 6, 1987, to all persons except those to whom it has already been made effective by priority letter from the FAA dated December 5, 1986.

Compliance: As prescribed in the body of the AD.

ADDRESSES: Collins Alert Service Bulletin A22 dated November 25, 1986, applicable to this AD may be obtained from Collins Avionics Division, 400 Collins Road NE, Cedar Rapids, Iowa 52498. A copy of this information is also contained in the Rules Docket, FAA, Office of the Regional Counsel, Room 1558, 601 East 12th Street, Kansas City, Missouri 64106.

FOR FURTHER INFORMATION CONTACT: Ralph W. Rissmiller, Jr., FAA, Aerospace Engineer, ACE-130W, Wichita Aircraft Certification Office, 1801 Airport Road, Room 100, Mid-Continent Airport, Wichita, Kansas 67209; telephone (316) 946-4419.

SUPPLEMENTARY INFORMATION: Reports have been received of erroneous VOR and localizer deviation signals from the Model 51RV-4 VOR/ILS Navigation Receiver, when used to drive horizontal situation indicator (HSI), course deviation indicator (CDI), flight director displays and/or autopilots that have electronic circuitry on their deviation inputs. A parametric change by one vendor to the LM-101 operational amplifier device, used in the deviation output circuits of Model 51RV-4 units, can cause an oscillation to occur on the deviation output signal under certain load conditions. HSIs, CDIs, flight director displays, autopilots and other

equipment that has electronic circuitry on the deviation inputs can process this AC signal and create a bias or error on the resultant deviation output. Service reports indicate this bias may be on the order of 40 to 75 microamps (approximately ⅓ to ½ scale deflection). Instruments that use the deviation output signal to drive meter movements directly do not respond to the AC signal on the deviation signal and do not exhibit this problem. The Model 51RV-4 VOR/ILS receivers are known to be used on most transport category airplanes and are used in aircraft approved for Category I, II, and III ILS approaches and autoland systems. This AD requires modification of all affected receivers to remove excessive ripple from the output deviation line.

The FAA determined that this is an unsafe condition that may exist in other equipment of the same type design, thereby necessitating the AD. It was also determined that an emergency condition existed, that immediate corresponding action was required and that notice and public procedure thereon was impractical and contrary to the public interest. Accordingly, the FAA notified all known registered owners of the equipment affected by this AD by priority mail letter dated December 5, 1986. The AD became effective immediately as to these individuals upon receipt of that letter and is identified as AD 86-25-01. Since the unsafe condition described therein may still exist on other Collins Avionics Division/Rockwell International Model 51RV-4 VOR/ILS Navigation Receiver, Part Number 622-3255-XXX, the AD is being published in the **Federal Register** as an amendment to Part 39 of the Federal Aviation Regulations (14 CFR Part 39) to make it effective to all persons who did not receive the letter notification. Because a situation still exists that requires the immediate adoption of this regulation, it is found that notice and public procedure hereon are impracticable and contrary to the public interest, and good cause exists for making this amendment effective in less than 30 days.

The FAA has determined that this regulation is an emergency regulation that is not major under section 8 of Executive Order 12291. It is impracticable for the agency to follow the procedures of Order 12291 with respect to this rule since the rule must be issued immediately to correct an unsafe condition in aircraft. It has been further determined that this document involves an emergency regulation under DOT Regulatory Policies and Procedures (44 FR 11034; February 26, 1979). If this action is subsequently determined to involve a significant regulation, a final regulatory evaluation or analysis, as appropriate, will be prepared and placed in the regulatory docket (otherwise, an evaluation is not required). A copy of it, when filed may be obtained by contacting the Rules Docket at the location under the caption **"ADDRESSES"**.

List of Subjects in 14 CFR Part 39

Air transportation, Aviation safety, Aircraft, Safety.

Adoption of the Amendment

PART 39—[AMENDED]

Accordingly, pursuant to the authority delegated to me by the Administrator, the Federal Aviation Administration proposes to amend § 39.13 of Part 39 of the FAR as follows:

1. The authority citation for Part 39 continues to read as follows:

Authority: 49 U.S.C. 1354(a), 1421 and 1423; 49 U.S.C. 106(g) (Revised, Pub. L. 97-449, January 12, 1983); and 14 CFR 11.89.

2. By adding the following new AD:

Collins Avionics Division/Rockwell International: Applies to Model 51RV-4 VOR/ILS Navigation Receivers, Part Number 622-3255-XXX, Serial Number 5960 thru and including 7277, certificated to the applicable requirements of Technical Standard Orders C34c, C36c and C40a.

Compliance: Required as indicated in the body of this AD unless already accomplished.

To prevent deviation output signal oscillation that may cause undetected erroneous VOR and ILS localizer deviation display, flight director commands, and/or autopilot tracking, accomplish the following:

(a) For Model 51RV-4 navigation receivers not installed in an aircraft, prior to further use, modify the unit in accordance with the instructions contained in Collins Alert Service Bulletin A22 dated November 25, 1986.

(b) For Model 51RV-4 navigation receivers installed in an aircraft, accomplish the following:

(1) For installations approved for Category II, III, and/or autoland operations; within three calendar days after the effective date of this AD, fabricate and install on the instrument panel adjacent to the receiver control head and visible to the pilots the following placard using letters of a minimum 0.10 inch in height: "CATEGORY II/III/ AUTOLAND" (as appropriate) "OPERATIONS PROHIBITED." and operate the aircraft accordingly. The placard required by this paragraph may be installed by the holder of a pilot certificate issued by the FAA and valid for the aircraft in which the equipment is installed.

(2) Within three calendar days after the effective date of this AD, fabricate and install on the instrument panel adjacent to the receiver control head and visible to the pilots the following placard using letters of a minimum 0.10 inch in height: "AP/FD NOT TO BE COUPLED TO VOR/LOC." and operate the aircraft accordingly. The placard required by this paragraph may be installed by the holder of a pilot certificate issued by the FAA and valid for the aircraft in which the equipment is installed.

(3) Within three calendar days after the effective date of this AD, unless already verified within the preceeding two calendar days prior to the effective date of this AD; verify localizer centering using a calibrated reference signal or operational ILS localizer signal. This test may be accomplished by alignment of the aircraft on the centerline of a runway served by an ILS signal and observing the HSI (CDI) centering is within two needlewidths of center. Verify VOR centering by using a calibrated reference signal or approved VOR test location (VOT) and observing the HSI (CDI) centering is within ±2½ These tests must be accomplished with the receiver installed in the aircraft in its normal configuration. If either test produces unsatisfactory results, the navigation receiver must be removed from service. These tests may be accomplished by the holder of a pilot certificate issued by the FAA and valid for the aircraft in which the equipment is installed.

(4) Within 30 calendar days after the effective date of this AD, modify the effected receiver in accordance with the instructions contained in Collins Alert Service Bulletin A22 dated November 25, 1986, or replace with a serviceable unit.

(5) Upon modification of the navigation receiver in accordance with the instructions contained in Collins Alert Service Bulletin A22 dated November 25, 1986, the requirements of paragraphs (b)(1), (b)(2), and (b)(3) of this AD no longer apply.

(c) Aircraft may be flown in accordance with Federal Aviation Regulation 21.197 under visual meteorological conditions to a location where this AD can be accomplished.

(d) An equivalent means of compliance with this AD may be used if approved by the Manager, Wichita Aircraft Certification Office, 1801 Airport Road, Room 100, Mid-Continent Airport, Wichita, Kansas 67209.

All persons affected by this directive may obtain copies of the documents referred to herein upon request to Collins Avionics Division, 400 Collins Road NE, Cedar Rapids, Iowa 52498; or FAA, Office of the Regional Counsel, Room 1558, 601 East 12th Street, Kansas City, Missouri 64106.

This amendment becomes effective on January 6, 1987, to all persons except those to whom it has already been made effective by priority letter from the FAA dated December 5, 1986, and is identified as AD 86-25-01.

Issued in Kansas City, Missouri, on December 22, 1986.

Edwin S. Harris,

Director, Central Region.

[FR Doc. 87-225 Filed 1-6-87; 8:45 am]

BILLING CODE 4910-13-M

---

14 CFR Part 39

[Docket No. 86-NM-133-AD; Amdt. 39-5511]

Airworthiness Directives; SAAB Fairchild Model SF-340A Series Airplanes

AGENCY: Federal Aviation Administration (FAA), DOT.

ACTION: Final rule.

SUMMARY: This amendment adopts a new airworthiness directive (AD), applicable to certain SAAB Fairchild Model SF-340A series airplanes, that requires the installation of a heater blanket for the tail deicer valve to ensure correct operation. This action is prompted by reports of the valve freezing, which prevented the tail deicing system from functioning properly. This condition, if not corrected, could result in partial loss of control of the airplane.

EFFECTIVE DATE: February 12, 1987.

ADDRESSES: The service bulletin specified in this AD may be obtained upon request to: SAAB Aircraft, Product Support AB, S-58188, Linkoping, Sweden. This information may be examined at the FAA, Northwest Mountain Region, 17900 Pacific Highway South, Seattle, Washington, or the Seattle Aircraft Certification Office, 9010 East Marginal Way South, Seattle, Washington.

FOR FURTHER INFORMATION CONTACT: Ms. Judy Golder, Standardization Branch, ANM-113; telephone (206) 431-1967. Mailing address: FAA, Northwest Mountain Region, 17900 Pacific Highway South, C-68966, Seattle, Washington 98168.

SUPPLEMENTARY INFORMATION: A proposal to amend Part 39 of the Federal Aviation Regulations to include an airworthiness directive which requires installation of a heater blanket on the deicing valve, to prevent freezing of the valve and subsequent failure of the tail deicing system, was published in the **Federal Register** on July 15, 1986 (51 FR 25570).

Interested parties have been afforded an opportunity to participate in the making of this amendment. No comments were received in response to the NPRM.

After careful review of the available data, the FAA has determined that air safety and the public interest require the adoption of the rule as proposed.

It is estimated that 17 airplanes (15 airliner and 2 executive versions) of U.S. registry will be affected by this AD, that it will take approximately 4 manhours per airplane (airliner version), and 80 manhours per airplane (executive version), to accomplish the required actions, and that the average labor cost will be $40 per manhour. Based on these figures, the total cost impact of this AD to U.S. operators is estimated to be $8,800.

For the reasons discussed above, the FAA has determined that this regulation is not considered to be major under Executive Order 12291 or significant under DOT Regulatory Policies and Procedures (44 FR 11034; February 26, 1979) and it is further certified under the criteria of the Regulatory Flexibility Act that this rule will not have a significant economic effect on a substantial number of small entities because of the minimal cost of compliance per airplane ($160 airliner version, $3,200 executive version). A final evaluation has been prepared for this regulation and has been placed in the docket.

List of Subjects in 14 CFR Part 39

Aviation safety, Aircraft.

Adoption of the Amendment

PART 39—[AMENDED]

Accordingly, pursuant to the authority delegated to me by the Administrator, the Federal Aviation Administration amends § 39.13 of Part 39 of the Federal Aviation Regulations as follows:

1. The authority citation for Part 39 continues to read as follows:

Authority: 49 U.S.C. 1354(a), 1421 and 1423; 49 U.S.C. 106(g) (Revised Pub. L. 97-449, January 12, 1983); and 14 CFR 11.89.

2. By adding the following new airworthiness directive:

SAAB Fairchild: Applies to Model SF-340A series airplanes, serial numbers 03 through 044, certificated in any category. Compliance is required as indicated below, unless previously accomplished. To prevent partial loss of control as a result of an inoperative tail deicing system, accomplish the following:

A. Within the next 90 days after the effective date of this AD, install a tail deicer valve heater blanket and its associated equipment in accordance with SAAB Fairchild Service Bulletin SF 340-30-015, Revision 1, dated December 13, 1985.

B. An alternate means of compliance or adjustment of the compliance time, which provides an acceptable level of safety, may be used when approved by the Manager, Standardization Branch, ANM-113, FAA, Northwest Mountain Region.

C. Special flight permits may be issued in accordance with FAR 21.197 and 21.199 to operate airplanes to a base for the accomplishment of the modification required by this AD.

All persons affected by this directive who have not already received the appropriate service document from the manufacturer may obtain copies upon request to SAAB Aircraft, Product Support AB, S-58188, Linkoping, Sweden. This document may be examined at the FAA, Northwest Mountain Region, 17900 Pacific Highway South, Seattle, Washington, or the Seattle Aircraft Certification Office, 9010 East Marginal Way South, Seattle, Washington.

This amendment becomes effective February 12, 1987.

Issued in Seattle, Washington, on December 30, 1986.

Frederick M. Isaac,

Acting Director, Northwest Mountain Region.

[FR Doc. 87-227 Filed 1-6-87; 8:45 am]

BILLING CODE 4910-13-M

---

14 CFR Part 39

[Docket No. 86-NM-129-AD; Amdt. 39-5510]

Airworthiness Directives; Short Brothers, PLC, Model SD3-30 Series Airplanes

AGENCY: Federal Aviation Administration (FAA), DOT.

ACTION: Final rule.

SUMMARY: This amendment adds a new airworthiness directive (AD) that requires the replacement of the junction boxes in both the forward and aft fuel systems on certain Short Brothers, PLC, Model SD3-30 airplanes. This action is prompted by reports of seal deterioration which, if not corrected, could lead to fuel leaking into the passenger cabin.

EFFECTIVE DATE: February 12, 1987.

ADDRESS: The service bulletin specified in this AD may be obtained upon request to Short Brothers, PLC, 2011 Crystal Drive, Suite 713, Arlington, Virginia 22202-3702. This information may be examined at the FAA, Northwest Mountain Region, 17900 Pacific Highway South, Seattle, Washington, or the Seattle Aircraft Certification Office, 9010 East Marginal Way South, Seattle, Washington.

FOR FURTHER INFORMATION CONTACT: Ms. Judy M. Golder, Standardization Branch, ANM-113; telephone (206) 431-

1967. Mailing address: FAA, Northwest Mountain Region, 17900 Pacific Highway South, C-68966, Seattle, Washington 98168.

SUPPLEMENTARY INFORMATION: A proposal to amend Part 39 of the Federal Aviation Regulations to require the replacement of the junction boxes in the aft fuel system and installation of new seals on junction boxes in both the forward and aft fuel systems on certain Short Brothers, PLC, Model SD3-30 airplanes, was published in the **Federal Register** on July 15, 1986 (51 FR 25567).

Interested parties have been afforded an opportunity to participate in the making of this amendment. No comments were received in response to the proposal.

After careful review of the available data, the FAA has determined that air safety and the public interest require the adoption of the rule as proposed.

It is estimated that 12 airplanes of U.S. registry will be affected by this AD, that it will take approximately 60 manhours per airplane to accomplish the required actions, and that the average labor cost will be $40 per manhour. Based on these figures, the total cost impact of this AD to U.S. operators is estimated to be $28,800.

For the reasons discussed above, the FAA has determined that this regulation is not considered to be major under Executive Order 12291 or significant under DOT Regulatory Policies and Procedures (44 FR 11034; February 26, 1979); and it is further certified under the criteria of the Regulatory Flexibility Act that this rule will not have a significant economic effect on a substantial number of small entities because of the minimal cost of compliance per airplane ($2,400). A final evaluation has been prepared for this regulation and has been placed in the docket.

List of Subjects in 14 CFR Part 39

Aviation safety, Aircraft.

Adoption of the Amendment

PART 39—[AMENDED]

Accordingly, pursuant to the authority delegated to me by the Administrator, the Federal Aviation Administration amends § 39.13 of Part 39 of the Federal Aviation Regulations as follows:

1. The authority citation for Part 39 continues to read as follows:

Authority: 49 U.S.C. 1354(a), 1421 and 1423; 49 U.S.C. 106(g) (Revised Pub. L. 97-449, January 12, 1983); and 14 CFR 11.89.

2. By adding the following new airworthiness directive:

Short Brothers

PLC: Applies to Model SD3-30 airplanes listed in Short Brothers, PLC, Service Bulletin SD330-28-33, Revision 1, dated January 1, 1986, certificated in any category. To prevent fuel leaks into the passenger cabin, accomplish the following, unless previously accomplished:

1. Within 9 months after the effective date of this AD, modify the fuel containment system in accordance with Short Brothers, PLC, Service Bulletin SD330-28-33, Revision 1, dated January 1, 1986.

2. An alternate means of compliance or adjustment of the compliance time, which provides an acceptable level of safety, may be used when approved by the Manager, Standardization Branch, ANM-113, FAA, Northwest Mountain Region.

3. Special flight permits may be issued in accordance with FAR 21.197 and 21.199 to operate airplanes to a base for the accomplishment of the modifications required by this AD.

All persons affected by this directive who have not already received the appropriate service document from the manufacturer may obtain copies upon request to Short Brothers, PLC, 2011 Crystal Drive, Suite 713, Arlington, Virginia, 22202-3702. This document may be examined at the FAA, Northwest Mountain Region, 17900 Pacific Highway South, Seattle, Washington, or the Seattle Aircraft Certification Office, 9010 East Marginal Way South, Seattle, Washington.

This amendment becomes effective February 12, 1987.

Issued in Seattle, Washington, on December 30, 1986.

Frederick M. Isaac,

Acting Director, Northwest Mountain Region.

[FR Doc. 87-226 Filed 1-6-87; 8:45 am]

BILLING CODE 4910-13-M

---

14 CFR Part 71

[Airspace Docket No. 85-AEA-12]

Alteration to Control Zone, Indiantown Gap, PA

AGENCY: Federal Aviation Administration (FAA), DOT.

ACTION: Final rule.

SUMMARY: This amendment alters the operating hours of the Muir AAF, Fort Indiantown Gap, PA, Control Zone to more correctly align the effective hours of the Control Zone with the operating hours of the Air Traffic Control Tower and weather reporting facilities.

EFFECTIVE DATE: 0901 UTC, February 12, 1987.

FOR FURTHER INFORMATION CONTACT: Glenn A. Bales, Airspace and Planning Branch, AEA-530, Air Traffic Division, Federal Aviation Administration, Fitzgerald Federal Building, J.F.K. International Airport, Jamaica, New York 11430; Telephone: (718) 917-1228.

SUPPLEMENTARY INFORMATION:

History

On Thursday, July 31, 1986, the FAA proposed to amend Part 71 of the Federal Aviation Regulations (14 CFR Part 71) to realign the published control zone hours with the normal operating hours of the air traffic control tower and weather observation facility at Muir AAF, Fort Indiantown Gap, PA, to provide all users of the Muir Army Terminal Area "flight following" for terminal IFR/VFR, and enroute local and transition aircraft, in addition to those services associated with the Control Zone. (51 FR 27423).

Interested parties were invited to participate in this proposed rulemaking proceeding by submitting written comments on the proposal to the FAA. No comments objecting to the proposal were received. Except for editorial changes, this amendment is the same as that proposed in the notice. Section 71.171 of Part 71 of the Federal Aviation Regulations was republished in Handbook 7460.6 dated January 2, 1986.

The Rule

This amendment to Part 71 of the Federal Aviation Regulations alters the present control zone hours of operation, (from 0800 to 1630 hours, local time, Sunday and Monday and from 0800 to 2300 hours, local time, Tuesday through Saturday), to (from 0800 to 2400 hours, local time, Monday through Friday and from 0800 to 1600 hours, local time, Saturday and Sunday), to realign the published control zone hours with the normal operating hours of the air traffic control tower and weather observation facility. The expanded hours are due to increased military aviation training requirements. This action, when taken, will provide all users of the Muir Army Terminal Area "flight following" for terminal IFR/VFR, and enroute local and transition aircraft, in addition to those services associated with the Control Zone. The FAA has determined that this amendment only involves an established body of technical regulations for which frequent and routine amendments are necessary to keep them operationally current. It, therefore: (1) Is not a "major rule" under Executive Order 12291; (2) is not a "significant rule" under DOT Regulatory Policies and Procedures (44 FR 11034; February 26, 1979); and (3) does not warrant preparation of a regulatory evaluation as the anticipated impact is so minimal. Since this is a routine matter that will only affect air traffic

procedures and air navigation, it is certified that this rule will not have a significant economic impact on a substantial number of small entities under the criteria of the Regulatory Flexibility Act.

List of Subjects in 14 CFR Part 71

Aviation safety, Control zone.

Adoption of the Amendment

PART 71—[AMENDED]

Accordingly, pursuant to the authority delegated to me, Part 71 of the Federal Aviation Regulations (14 CFR Part 71) is amended, as follows:

1. The authority citation for Part 71 continues to read as follows:

Authority: 49 U.S.C. 1348(a), 1354(a), 1510; Executive Order 10854; 49 U.S.C. 106(g) (Revised Pub. L. 97-449, January 12, 1983); 14 CFR 11.69.

2. Section 71.171 is amended as follows:

Fort Indiantown Gap, PA [Amended]

By removing the words "This control zone is effective from 0800 to 1630 hours local time, Sunday and Monday and from 0800 to 2300 hours local time, Tuesday through Saturday, excluding Federal legal holidays," and by substituting the words "This Control Zone is effective from 0800 to 2400 hours, local time, Monday through Friday and from 0800 to 1600 hours, local time, Saturday and Sunday, excluding Federal legal holidays,".

Issued in Jamaica, New York, on December 19, 1986.

Edmund Spring,

Manager, Air Traffic Division.

[FR Doc. 87-228 Filed 1-6-87; 8:45 am]

BILLING CODE 4910-13-M

---

14 CFR Part 71

[Airspace Docket No. 86 AEA-3]

Alteration to Control Zone, Aberdeen, MD

AGENCY: Federal Aviation Administration (FAA), DOT.

ACTION: Final rule.

SUMMARY: This amendment alters the operating hours of the Phillips AAF, Aberdeen MD, Control Zone to more correctly align the effective hours of the Control Zone with the operating hours of the Air Traffic Control Tower.

EFFECTIVE DATE: 0901 UTC, February 12, 1987.

FOR FURTHER INFORMATION CONTACT: Glenn A. Bales, Airspace Planning Branch, AEA-530, Air Traffic Division, Federal Aviation Administration, Fitzgerald Federal Building, J.F.K. International Airport, Jamaica, New York 11430; Telephone: (718) 917-1228.

SUPPLEMENTARY INFORMATION:

History

On Thursday, July 31, 1986, the FAA proposed to amend Part 71 of the Federal Aviation Regulations (14 CFR Part 71) to realign the published control zone hours with the normal operating hours of the Air Traffic Control Tower, (51 FR 27420). The expanded hours are due to increased military aviation mission requirements. This action is taken to provide all users of the Phillips Army Airfield those services associated with the Control Zone. Interested parties were invited to participate in this proposed rulemaking proceeding by submitting written comments on the proposal to the FAA. No comments objecting to the proposal were received. Except for editorial changes, this amendment is the same as that proposed in the notice. Section 71.171 of Part 71 of the Federal Aviation Regulations was republished in Handbook 7460.6 dated January 2, 1986.

The Rule

This amendment to Part 71 of the Federal Aviation Regulations will correctly align the operating hours of the Control Zone to (from 0600 to 2000 hours, local time, Monday, through Friday, excluding Federal legal holidays, or during the specific dates and times established in advance by a Notice to Airmen). The FAA has determined that this amendment only involves an established body of technical regulations for which frequent and routine amendments are necessary to keep them operationally current. It, therefore: (1) Is not a "major rule" under Executive Order 12291; (2) is not a "significant rule" under DOT Regulatory Policies and Procedures (44 FR 11034; February 26, 1979); and (3) does not warrant preparation of a regulatory evaluation as the anticipated impact is so minimal. Since this is a routine matter that will only affect air traffic procedures and air navigation, it is certified that this rule will not have a significant economic impact on a substantial number of small entities under the criteria of the Regulatory Flexibility Act.

List of Subjects in 14 CFR Part 71

Aviation safety, Control zones.

Adoption of the Amendment

PART 71—[AMENDED]

Accordingly, pursuant to the authority delegated to me, Part 71 of the Federal Aviation Regulations (14 CFR Part 71) is amended, as follows:

1. The authority citation for Part 71 continues to read as follows:

Authority: 49 U.S.C. 1348(a), 1354(a), 1510; Executive Order 10854; 49 U.S.C. 106(g) (Revised Pub. L. 97-449, January 12, 1983); 14 CFR 11.69.

2. Section 71.171 is amended as follows:

Aberdeen, MD [Amended]

By removing the words "This Control Zone is effective from 0800 to 1630 hours, local time, Monday through Friday, excluding Federal legal holidays," and substituting the words "This Control Zone is effective from 0600 to 2000 hours, local time, Monday, through Friday, excluding Federal legal holidays, or during the specific dates and times established in advance by a Notice to Airmen.".

Issued in Jamaica, New York, on December 19, 1986.

Edmund Spring,

Manager, Air Traffic Division.

[FR Doc. 87-229 Filed 1-6-87; 8:45 am]

BILLING CODE 4910-13-M

---

14 CFR Part 71

[Airspace Docket No. 84-AEA-7]

Designation of Transition Area, Malone, NY

AGENCY: Federal Aviation Administration (FAA), DOT.

ACTION: Final rule.

SUMMARY: This action will designate a 700 foot transition area at Malone, NY. A new VOR/DME-A instrument approach procedure has been developed to the Malone-DuFort, NY, Airport. The transition area will provide protected airspace for aircraft departing/arriving under Instrument Flight Rules (IFR).

EFFECTIVE DATE: 0901 UTC, February 12, 1987.

FOR FURTHER INFORMATION CONTACT: Glenn A. Bales, Airspace Planning Branch, AEA-530, Air Traffic Division, Federal Aviation Administration, Fitzgerald Federal Building, J.F.K. International Airport, Jamaica, New York 11430; Telephone: (718) 917-1228.

SUPPLEMENTARY INFORMATION:

History

On October 11, 1985, the FAA proposed to amend Part 71 of the Federal Aviation Regulations (14 CFR Part 71) to establish a transition area at Malone-DuFort, NY. This action will provide protected airspace for aircraft departing/arriving under Instrument Flight Rules (IFR), (50 FR 41525). Interested parties were invited to participate in this proposed rulemaking

proceeding by submitting written comments on the proposal to the FAA. No comments objecting to the proposal were received. Except for editorial changes, this amendment is the same as that proposed in the notice. Section 71.181 of Part 71 of the Federal Aviation Regulations was republished in Handbook 7460.6 dated January 2, 1986.

The Rule

This amendment to Part 71 of the Federal Aviation Regulations will designate a 700 foot transition area at Malone, NY. The FAA has determined that this amendment only involves an established body of technical regulations for which frequent and routine amendments are necessary to keep them operationally current. It, therefore: (1) Is not a "major rule" under Executive Order 12291; (2) is not a "significant rule" under DOT Regulatory Policies and Procedures (44 FR 11034; February 26, 1979); and (3) does not warrant preparation of a regulatory evaluation as the anticipated impact is so minimal. Since this is a routine matter that will only affect air traffic procedures and air navigation, it is certified that this rule will not have a significant economic impact on a substantial number of small entities under the criteria of the Regulatory Flexibility Act.

List of Subjects in 14 CFR Part 71

Aviation safety, Transition areas.

Adoption of the Amendment

PART 71—[AMENDED]

Accordingly, pursuant to the authority delegated to me, Part 71 of the Federal Aviation Regulations (14 CFR Part 71) is amended, as follows:

1. The authority citation for Part 71 continues to read as follows:

Authority: 49 U.S.C. 1348(a), 1354(a), 1510; Executive Order 10854; 49 U.S.C. 106(g) (Revised Pub. L. 97-449, January 12, 1983); 14 CFR 11.69.

2. Section 71.181 is amended as follows:

Malone, NY [New]

That airspace extending upward from 700 feet above the surface within a five statute mile radius of the center (Lat. 44°51'15" N., Long. 74°19'45" W.), of the Malone-DuFort, NY, Airport; and within 2.5 miles each side of the Massena, NY, VORTAC 116° radial, extending from the five mile radius area to 14 miles east of the VORTAC.

Issued in Jamaica, New York, on December 19, 1986.

Edmund Spring,

Manager, Air Traffic Division.

[FR Doc. 87-230 Filed 1-6-87; 8:45 am]

BILLING CODE 4910-13-M

RAILROAD RETIREMENT BOARD

20 CFR Part 364

Use of Penalty Mail To Assist in the Location and Recovery of Missing Children

AGENCY: Railroad Retirement Board.

ACTION: Final rule.

SUMMARY: This rule will enable the Railroad Retirement Board (Board) to publicize information about missing children. This information will be provided in accordance with the guidelines of the Office of Juvenile Justice and Delinquency Prevention regarding the use of penalty mail to assist in the search for missing children.

EFFECTIVE DATE: January 7, 1987.

FOR FURTHER INFORMATION CONTACT: Steven A. Bartholow, Deputy General Counsel, (312) 751-4935 (FTS 387-4935).

SUPPLEMENTARY INFORMATION: These regulations provide guidelines for the administration of the Board's authority under 39 U.S.C. 3220 to use official mail to assist in the location and recovery of missing children. Public Law 99-87 (August 9, 1985) amended Chapter 32 of Title 39 of the United States Code to authorize every independent Federal agency, including the Board, to issue regulations governing the use of its mail for this purpose.

In accordance with 39 U.S.C. 3220(a)(1), the Office of Juvenile Justice and Delinquency Prevention (Office), in 50 FR 46622, November 8, 1985, published guidelines governing the use of penalty mail to help locate missing children. These guidelines allow each agency to determine what types of its mail will contain information on missing children. This includes envelopes, newsletters, and any other in-house publication.

Furthermore, the guidelines provide several methods of presenting this information. Data on missing children can be printed on envelopes or on stickers that are placed on envelopes. Also, this information can be on inserts that are put in envelopes along with other agency material. Finally, the guidelines permit agencies to print this information in agency newsletters.

The guidelines designate the National Center for Missing and Exploited Children (Center) as the exclusive source from which missing children material shall be obtained. The Office mandated that this information shall have a three-month shelf life. In other words, an agency may use this material for no more than three months after the Center has either been notified that a child has been recovered or that a parent or guardian has withdrawn their permission to use this information. The Board's plan will follow these mandates.

The Board will provide for the dissemination of information on missing children in several ways. First, this data will be printed in the in-house publication the "All-A-Board". This is a very cost-effective approach and will be viewed by a sufficient number of employees to be worthwhile. Approximately 2,500 copies of this publication are distributed; the majority are distributed in Chicago, Illinois. This would be an effective way to disseminate such information and will not add to the cost of printing the "All-A-Board". In addition, the Board will study whether this data should appear on other intra-agency materials.

Second, information on missing children will appear on posters in the Board's nearly one hundred field offices in about forty states and the District of Columbia. These posters will appear in the offices' waiting rooms where the public will have an opportunity to view them. As a result, this approach will result in a very broad dissemination of information concerning missing children in a cost-effective manner.

These posters will not be sent to the field offices as a separate mailing. Rather, they will be included in mailings that are made in the normal course of the Board's operations. If posters are mailed out five times a year, the total cost to the Board will be approximately one hundred dollars.

This rule also instructs the Board to continue to evaluate potential opportunities to use official mail to aid in the location and recovery of missing children. One possibility is the placement of stickers with missing children data on official mail. Another potential method of distributing this information is through inserts when mailing checks to annuitants and beneficiaries (check stuffers).

The Board has determined that in most instances inserts are not to be used because they are expensive and an administrative burden. An exception worthy of study is the placement of inserts in a railroad employee's yearly BA-6 compensation and service notification. The Board also decided not to print missing children information on

envelopes. This approach would impose an excessive administrative burden on the Board and be unduly costly. These problems are exacerbated by the short "shelf life" of missing children data, which would result in waste by necessitating the frequent destruction of excess envelopes.

The Board will consider two factors when exploring alternatives for increasing the use of official mail to aid in finding missing children. First, the Board will decide whether the proposal is cost-effective. Second, the Board will determine whether the plan furthers the objective of locating and recovering missing children. By this approach, the Board should be able to increase the amount of official mail used in this cause. The present methods of distributing this information affect less than 1% of all official Board mail.

This rule is not a major rule for the purposes of Executive Order 12291 of February 17, 1981, and therefore a regulatory analysis is not required. In addition, the Paperwork Reduction Act of 1980 does not apply to this rule.

List of Subjects in 20 CFR Part 364

Administrative practice and procedure, infants and children.

For the reasons set forth in the preamble, Title 20, Chapter II of the Code of Federal Regulations is amended by adding a new Part 364 as follows:

PART 364—USE OF PENALTY MAIL TO ASSIST IN THE LOCATION AND RECOVERY OF MISSING CHILDREN

Sec.

364.1 Purpose.
364.2 Definitions.
364.3 Publication of missing children information in the Railroad Retirement Board's in-house publications.
364.4 Placement of missing children posters in Board field offices.
364.5 Further study of the use of penalty mail in the location and recovery of missing children.

Authority: 39 U.S.C. 3220(a)(2).

§ 364.1 Purpose.

These regulations, which implement 39 U.S.C. 3220, provide the standards and guidelines for the use of Board penalty mail in the location and recovery of missing children.

§ 364.2 Definitions.

For purposes of this part, terms are defined as follows:

All-A-Board is the Board's in-house newspaper that is published on an irregular basis about six times a year.

Field office is a Board district office. These offices are located throughout the United States.

Penalty mail means the official mail of the Board that is used to carry out the Board's duties.

Shelf life means the amount of time the Board has to remove from circulation outdated missing children information. This is a three month period, commencing with the date notice is received by the National Center for Missing and Exploited Children that such information is no longer accurate.

§ 364.3 Publication of missing children information in the Railroad Retirement Board's in-house publications.

(a) *All-A-Board.* Information about missing children will appear in the All-A-Board. This publication will obtain the necessary information from the National Center for Missing and Exploited Children. The editorial staff of the All-A-Board shall determine the number of children described in each issue and where this information will appear in the publication.

(b) *Other in-house publications.* The Board may publish missing children information in other in-house publications as it deems appropriate. This determination will be made in accordance with the guidelines that appear in § 364.5.

§ 364.4 Placement of missing children posters in Board field offices.

(a) *Poster content.* The National Center for Missing and Exploited Children shall select the missing child and the pertinent information about that child, which may include a photograph of the child, that will appear on the poster. The Board will develop a standard format for these posters.

(b) *Transmission of posters to field offices.* The Board shall send the posters to its field offices in penalty mail. Those posters will be included in penalty mailings that are made in the normal course of the Board's operations.

(c) *Field office use of posters.* (1) Upon receipt of the poster, the field office will place it in the waiting room, if possible. Otherwise, the field office should put the poster in a place where it will be viewed by the public.

(2) The field office must remove and destroy the posters by the end of their shelf life. The field office also may remove posters that they believe have ceased to be of assistance in locating and recovering missing children.

§ 364.5 Further study of the use of penalty mail in the location and recovery of missing children.

(a) *Criteria.* The Board shall continue to study different alternatives for using penalty mail to assist in the location and recovery of missing children. In order to implement a proposal, it must:

(1) Be cost effective; and

(2) Fulfill the goal of aiding in the location and recovery of missing children.

(b) *Requirements.* In any program, the National Center for Missing and Exploited Children shall select the missing children and the information about these children, which may include a photograph, that will be used by the Board. Proposals must provide for the removal of this material before the end of its shelf life.

Dated: December 30, 1986.

By Authority of the Board.

For the Board.

Beatrice Ezerski,

Secretary to the Board.

[FR Doc. 87-213 Filed 1-6-87; 8:45 am]

BILLING CODE 7905-01-M

DEPARTMENT OF HEALTH AND HUMAN SERVICES

Food and Drug Administration

21 CFR Part 176

[Docket No. 86F-0049]

Indirect Food Additives; Paper and Paperboard Components

AGENCY: Food and Drug Administration.

ACTION: Final rule.

SUMMARY: The Food and Drug Administration (FDA) is amending the food additive regulations to provide for the safe use of diethylene glycol dibenzoate in polyvinyl acetate coatings intended to contact food. This action responds to a petition filed by Velsicol Chemical Corp.

DATES: Effective January 7, 1987; objections by February 6, 1987.

ADDRESS: Written objections to the Dockets Management Branch (HFA-305), Food and Drug Administration, Rm. 4-62, 5600 Fishers Lane, Rockville, MD 20857.

FOR FURTHER INFORMATION CONTACT: Andrew D. Laumbach, Center for Food Safety and Applied Nutrition (HFF-335), Food and Drug Administration, 200 C St. SW., Washington, DC 20204, 202-472-5690.

SUPPLEMENTARY INFORMATION: In a notice published in the Federal Register of March 5, 1986 (51 FR 7638), FDA announced that a petition (FAP 5B3894) had been filed by Velsicol Chemical Corp., 341 East Ohio St., Chicago, IL 60611 (now 5600 North River Rd., Rosemont, IL 60018), proposing that § 176.170 *Components of paper and paperboard in contact with aqueous and*

fatty foods (21 CFR 176.170) be amended to provide for the safe use of diethylene glycol dibenzoate in polyvinyl acetate coatings intended to contact food.

FDA reviewed the safety of both the additive and the starting materials used to manufacture the additive. Although diethylene glycol dibenzoate has not been found to cause cancer, it may contain minute amounts of 1,4-dioxane and ethylene oxide as byproducts of its production. These chemicals have been shown to cause cancer in test animals. Residual amounts of reactants and manufacturing aids, such as these chemicals, are commonly found as contaminants in chemical products, including food additives.

I. Determination of Safety

Under section 409(c)(3)(A) of the Federal Food, Drug, and Cosmetic Act (the act) (21 U.S.C. 348(c)(3)(A)), the so-called "general safety clause" of the statute, a food additive cannot be approved for a particular use unless a fair evaluation of the data available to FDA establishes that the additive is safe for that use. The concept of safety embodied in the Food Additives Amendment of 1958 is explained in the legislative history of the provision: "Safety requires proof of a reasonable certainty that no harm will result from the proposed use of an additive. It does not—and cannot—require proof beyond any possible doubt that no harm will result under any conceivable circumstances." H. Rept. 2284, 85th Cong., 2d Sess. 4 (1958). This definition of safety has been incorporated into FDA's food additive regulations (21 CFR 170.3(i)). The anticancer or Delaney clause of the Food Additives Amendment of 1958 (section 409(c)(3)(A)) of the act (21 U.S.C. 348(c)(3)(A))) provides further that no food additive shall be deemed to be safe if it is found to induce cancer when ingested by man or animal.

In the past, FDA has often refused to approve a use of an additive that contained or was suspected of containing even minor amounts of a carcinogenic chemical, even though the additive as a whole has not been shown to cause cancer. The agency now believes, however, that developments in scientific technology and experience with risk assessment procedures make it possible for FDA to establish the safety of additives that contain a carcinogenic chemical but that have not themselves been shown to cause cancer.

In the preamble to the final rule permanently listing D&C Green No. 6 published in the **Federal Register** of April 2, 1982 (47 FR 14138), FDA explained the basis for approving the use of a color additive that had not been shown to cause cancer, even though it contain a carcinogenic constitutent. Since that decision, FDA has approved the use of other color additives and food additives on the same basis. FDA fully explained the scientific, legal, and policy underpinnings for these decisions in the advance notice of proposed rulelmaking on a policy for regulating carcinogenic chemicals in food and color additives, published in the **Federal Register** of April 2, 1982 (47 FR 14464).

The agency now believes that the Delaney or anticancer clause is applicable only when the food additive as a whole is found to cause cancer. An additive that has not been shown to cause cancer, but that contains a carcinogenic constituent, may properly be evaluated under the general safety clause of the statute using risk assessment procedures to determine whether there is a reasonable certainty that no harm will result from the proposed use of the additive.

The agency's position is supported by *Scott* v. *FDA*, 728 F.2d 322 (6th Cir. 1984). That case involved a challenge to FDA's decision to approve the use of D&C Green No. 5, which contains a carcinogenic chemical but has itself not been shown to cause cancer. Relying heavily on the reasoning in the agency's decision to list this color additive, the U.S. Court of Appeals for the Sixth Circuit rejected the challenge to FDA's action and affirmed the listing regulation.

II. Safety of Petitioned Use

FDA estimates that the petitioned use of diethylene glycol dibenzoate will result in extremely low levels of exposure to this additive. The agency has calculated an estimated daily intake of diethylene glycol dibenzoate based on considerations such as the migration of the additive under the most severe intended use conditions and the probable concentration of the additive in the daily diet from food-contact articles that contain this substance. The estimated daily intake for the additive is 0.9 milligram per day (0.31 part per million in the diet) for a 60-kilogram person. FDA does not ordinarily consider chronic testing to be necessary to determine the safety of additives whose use will result in such low exposure levels (Refs. 1 and 2) and has required only acute toxicity testing in this case.

FDA has found diethylene glycol dibenzoate to be safe and effective for the intended use based upon the extremely low levels of exposure to this substance and upon its evaluation of the data furnished on this substance in the petition.

The available data revealed no adverse effects from diethylene glycol dibenzoate. However, this additive may contain 1,4-dioxane and ethylene oxide, substances that have been shown to cause cancer in test animals. These impurities may be present as a result of the manufacturing procedures used to produce diethylene glycol dibenzoate. Nonetheless, because diethylene glycol dibenzoate has not been shown to cause cancer, the anticancer clause does not apply to it.

FDA has evaluated the safety of this additive under the general safety clause, using risk assessment procedures to estimate the upper bound limit of risk presented by the carcinogenic chemicals that may be present as impurities in the additive. Based on this evaluation, the agency has concluded that the additive is safe under the proposed conditions of use.

The risk assessment procedures that FDA used in this evaluation are similar to the methods that it has used to examine the risk associated with the presence of minor carcinogenic impurities in various other food and color additives that contain carcinogenic impurities (see, e.g., 49 FR 13018, 13019; April 2, 1984). This risk evaluation of the carcinogenic impurities 1,4-dioxane and ethylene oxide has two aspects: (1) Assessment of the worst case exposure to the impurities from the proposed use of the additive, and (2) extrapolation of the risk observed in the animal bioassays to the conditions of probable exposure to humans.

A. 1,4-Dioxane

Based on the fraction of the daily diet that may be in contact with surfaces containing diethylene glycol dibenzoate, as well as the level of 1,4-dioxane that may be present in the additive (Ref. 5), FDA estimated the hypothetical worst case exposure to 1,4-dioxane from the use of diethylene glycol dibenzoate to be 75 nanograms per person per day. The agency used data in a carcinogenesis bioassay on 1,4-dioxane conducted for the National Cancer Institute (Ref. 4) to estimate the upper bound level of lifetime human risk from exposure to this chemical stemming from the proposed use of diethylene glycol dibenzoate. The results of the bioassay on 1,4-dioxane demonstrated that the material was carcinogenic for female rats under the conditions of the study. The test material caused significantly increased incidences of squamous cell carcinomas and hepatocellular tumors in female rats.

The Center for Food Safety and Applied Nutrition's Cancer Assessment Committee reviewed this bioassay and other relevant data available in the literature and concluded that the findings of carcinogenicity were supported by this information on 1,4-dioxane. The committee further concluded that an estimate of the upper bound limit of lifetime human cancer risk from potential exposure to 1,4-dioxane stemming from the proposed use of diethylene glycol dibenzoate could be calculated from the bioassay.

The agency used a quantitative risk assessment procedure (linear proportional model) to extrapolate from the dose used in the animal experiment to the very low doses encountered under the proposed conditions of use. This procedure is not likely to underestimate the actual risk from very low doses and may, in fact, exaggerate it because the extrapolation models used are designed to estimate the maximum risk consistent with the data. For this reason the estimate can be used with confidence to determine to a reasonable certainty whether any harm will result from the proposed conditions and levels of use of the food additive. Based on the worst case exposure of 75 nanograms per person per day, FDA estimates the upper bound limit of individual lifetime risk from potential exposure to 1,4-dioxane from the use of diethylene glycol dibenzoate is 3×10^{-5} or 3 in 1 billion. Because of numerous conservatisms in the exposure estimate, lifetime averaged individual exposure to 1,4-dioxane is expected to be substantially less than the estimated daily intake, and therefore the calculated upper bound risk would be less. Thus, the agency concludes that there is a reasonable certainty of no harm from exposure to 1,4-dioxane that results from the use of diethylene glycol dibenzoate.

B. Ethylene Oxide

Based on the fraction of the daily diet that may be in contact with surfaces containing diethylene glycol dibenzoate as well as the level of ethylene oxide that may be present in the additive (Ref. 5), FDA estimated the hypothetical worst case exposure to ethylene oxide from the use of diethylene glycol dibenzoate to be 75 nanograms per person per day. The agency used data in a carcinogenesis bioassay on ethylene oxide conducted for the Institute of Hygiene, University of Mainz, West Germany (Ref. 3), to estimate the upper bound level of lifetime human risk from exposure to this chemical stemming from the proposed use of diethylene glycol dibenzoate. The results of the bioassay on ethylene oxide demonstrated that this material was carcinogenic for female rats under the conditions of the study. The test material caused significantly increased incidences of squamous cell carcinoma of the forestomach and carcinoma in situ of the glandular stomach.

The Center for Food Safety and Applied Nutrition's Cancer Assessment Committee reviewed this bioassay and other relevant data available in the literature and concluded that this information on ethylene oxide supported the finding of carcinogenicity. The committee further concluded that an estimate of the upper bound limit of lifetime human cancer risk from potential exposure to ethylene oxide could be made from the bioassay.

Based on a worst case exposure of 75 nanograms per person per day, FDA estimates, using a linear proportional model, that the upper bound limit of individual lifetime risk from potential exposure to ethylene oxide from the use of diethylene glycol dibenzoate is 1.4×10^{-7} or less than 2 in 10 million. Because of numerous conservatisms in the exposure estimate, lifetime averaged individual exposure to ethylene oxide is expected to be substantially less than the estimated daily intake, and therefore, the calculated upper bound risk would be less. Thus, the agency concludes that there is a reasonable certainty of no harm from the exposure to ethylene oxide that results from the use of diethylene glycol dibenzoate.

C. Need for Specifications

The agency has also considered whether a specification is necessary to control the amount of the ethylene oxide and 1,4-dioxane impurities in the food additive. The agency finds that a specification is not necessary for the following reasons: (1) Because of the levels at which ethylene oxide and 1,4-dioxane are used in the production of the additive, the agency would not expect these impurities to become components of food at other than extremely small levels; and (2) the upper bound limit of lifetime risk from exposure to these impurities, even under worst case assumptions, is very low, less than 2 in 10 million for ethylene oxide and 3 in 1 billion for 1,4-dioxane.

D. Conclusion of Safety

FDA has evaluated the available toxicity data and the exposure calculation for the additive and has determined that the additive is safe for its proposed use.

In accordance with § 171.1(h) (21 CFR 171.1(h)), the petition and the documents that FDA considered and relied upon in reaching its decision to approve the petition are available for inspection at the Center for Food Safety and Applied Nutrition (address above) by appointment with the information contact person listed above. As provided in 21 CFR 171.1(h), the agency will delete from the documents any materials that are not available for public disclosure before making the documents available for inspection.

The agency has previously considered the environmental effects of this rule as announced in the Notice of Filing for FAP 5B3894 (March 5, 1986; 51 FR 7638). No new information or comments have been received that would affect the agency's previous determination that there is no significant impact on the human environment, and that an environmental impact statement is not required.

References

The following references have been placed on display in the Dockets Management Branch (address above) and may be reviewed in that office between 9 a.m. and 4 p.m., Monday through Friday.

1. Carr, G. M., "Carcinogenicity Testing Programs" *in* "Food Safety: Where Are We?," Committee on Agriculture, Nutrition, and Forestry, U.S. Senate, p. 59, July 1979.

2. Kokoski, C. J., "Regulatory Food Additive Toxicology" presented at the "Second International Conference on Safety Evaluation and Regulation of Chemicals," Cambridge, MA, October 24, 1983.

3. Dunkelberg, H., "Carcinogenicity of Ethylene Oxide and 1,2-Propylene Oxide upon Intragastric Administration to Rats," *British Journal of Cancer*, 46:924, 1982.

4. "Bioassay of 1,4-Dioxane for Possible Carcinogenicity," National Cancer Institute, NCI-CG-TR-80, 1978.

5. Memorandum dated June 20, 1986, from Regulatory Food Chemistry Branch to Indirect Additives Branch, "Exposure to Ethylene Oxide (EO) and 1,4-Dioxane (DX)."

Any person who will be adversely affected by this regulation may at any time on or before February 6, 1987, file with the Dockets Management Branch (address above) written objections thereto. Each objection shall be separately numbered, and each numbered objection shall specify with particularity the provisions of the regulation to which objection is made and the grounds for the objection. Each numbered objection on which a hearing is requested shall specifically so state. Failure to request a hearing for any particular objection shall constitute a waiver of the right to a hearing on that objection. Each numbered objection for which a hearing is requested shall include a detailed description and

analysis of the specification factual information intended to be presented in support of the objection in the event that a hearing is held. Failure to include such a description and analysis for any particular objection shall constitute a waiver of the right to a hearing on the objection. Three copies of all documents shall be submitted and shall be identified with the docket number found in brackets in the heading of this document. Any objections received in response to the regulation may be seen in the Dockets Management Branch between 9 a.m. and 4 p.m., Monday through Friday.

List of Subjects in 21 CFR Part 176

Food additives, Food packaging.

Therefore, under the Federal Food, Drug, and Cosmetic Act and under authority delegated to the Commissioner of Food and Drugs, Part 176 is amended as follows:

PART 176—INDIRECT FOOD ADDITIVES: PAPER AND PAPERBOARD COMPONENTS

1. The authority citation for 21 CFR Part 176 continues to read as follows:

Authority: Secs. 201(s), 409, 72 Stat. 1784–1788 as amended (21 U.S.C. 321(s), 348); 21 CFR 5.10, 5.61.

2. Section 176.170 is amended in paragraph (b)(2) by alphabetically inserting a new item in the table to read as follows:

§ 176.170 Components of paper and paperboard in contact with aqueous and fatty foods.

* * * * *

(b) * * *

(2) * * *

List of substances	Limitations
* * *	* * *
Diethylene glycol dibenzoate (CAS Reg. No. 120-55-8)	For use only as a plasticizer for polyvinyl acetate coatings at a level not to exceed 5 percent by weight of the coating solids under conditions described in paragraph (c) of this section, table 2, conditions of use E, F, and G.
* * *	* * *

* * * * *

Dated: December 31, 1986.

John M. Taylor,

Associate Commissioner for Regulatory Affairs.

[FR Doc. 87-176 Filed 1-6-87; 8:45 am]

21 CFR Part 558

New Animal Drugs for Use in Animal Feeds; Tylosin

AGENCY: Food and Drug Administration.

ACTION: Final rule.

SUMMARY: The Food and Drug Administration (FDA) is amending the animal drug regulations to reflect approval of a supplemental new animal drug application (NADA) filed for Furst-McNess Co., providing for the manufacture of Type A medicated articles containing 5, 10, 20, and 40 grams per pound tylosin used to make Type C medicated feeds for swine, beef cattle, and chickens.

EFFECTIVE DATE: January 7, 1987.

FOR FURTHER INFORMATION CONTACT: Benjamin A. Puyot, Center for Veterinary Medicine (HFV-135), Food and Drug Administration, 5600 Fishers Lane, Rockville, MD 20857, 301-443-1414.

SUPPLEMENTARY INFORMATION: Furst-McNess Co., Freeport, IL 61032, is the sponsor of a supplement to NADA 100-991 submitted on its behalf by Elanco Products Co. The supplement provides for the manufacture of new Type A medicated articles containing 5, 10, 20, and 40 grams per pound tylosin used to make Type C medicated feeds for swine, beef cattle, and chickens for use as in 21 CFR 558.625(f)(1)(i) through (vi). The supplement is approved and 21 CFR 558.625(b)(42) is amended to reflect the approval.

In accordance with the freedom of information provisions of Part 20 (21 CFR Part 20) and § 514.11(e)(2)(ii) (21 CFR 514.11(e)(2)(ii)), a summary of safety and effectiveness data and information submitted to support approval of this application may be seen in the Dockets Management Branch (HFA-305), Food and Drug Administration, Rm. 4-62, 5600 Fishers Lane, Rockville, MD 20857, from 9 a.m. to 4 p.m., Monday through Friday.

The agency has determined under 21 CFR 25.24(d)(1)(i) that this action is of a type that does not individually or cumulatively have a significant effect on the human environment. Therefore, neither an environmental assessement nor an environmental impact statement is required.

List of Subjects in 21 CFR Part 558

Animal drugs, Animal feeds.

Therefore, under the Federal Food, Drug, and Cosmetic Act and under authority delegated to the Commissioner of Food and Drugs and redelegated to the Center for Veterinary Medicine, Part 558 is amended as follows:

PART 558—NEW ANIMAL DRUGS FOR USE IN ANIMAL FEEDS

1. The authority citation for 21 CFR Part 558 continues to read as follows:

Authority: Sec. 512, 82 Stat. 343-351 (21 U.S.C. 360b); 21 CFR 5.10 and 5.83.

2. Section 558.625 is amended by revising paragraph (b)(42) to read as follows:

§ 558.625 Tylosin.

* * * * *

(b) * * *

(42) To 010439: 0.4, 0.5, and 2 grams per pound, paragraph (f)(1)(vi) (*a*) of this section; 5, 10, 20, and 40 grams per pound, paragraph (f)(1)(i) through (vi) of this section.

* * * * *

Dated: January 31, 1986.

Marvin A. Norcross,

Associate Director for New Animal Drug Evaluation.

[FR Doc. 87-199 Filed 1-6-87; 8:45 am]

BILLING CODE 4160-01-M

DEPARTMENT OF THE TREASURY

Bureau of Alcohol, Tobacco and Firearms

27 CFR Parts 19, 25, 240, 250, 251, 270, 275, and 285

[T.D. ATF 245]

Electronic Fund Transfer for Alcohol and Tobacco Tax Payments

AGENCY: The Bureau of Alcohol, Tobacco and Firearms (ATF), Treasury.

ACTION: Final rule, Treasury decision.

SUMMARY: This final rule implements section 1801 of the Tax Reform Act of 1986, Pub. L. 99-514, which changes the criteria for determining who is required to pay alcohol and tobacco excise taxes by electronic fund transfer. Specifically, the Act amends 26 U.S.C. 5061 and 5703(b) by redefining controlled groups of corporations and controlled groups which include nonincorporated persons.

DATE: This final rule is effective January 7, 1987, and applies to tax remittances required to be paid in calendar year 1987.

FOR FURTHER INFORMATION CONTACT: Clifford A. Mullen, (202) 566-7531,

or

John A. Linthicum, (202) 566-7626.

SUPPLEMENTARY INFORMATION: The Deficit Reduction Act of 1984, Pub. L.

98–369, required tax remittances to be made using electronic fund transfer (EFT) for any taxpayer who, in any 12 month period ending December 31, was liable for a gross amount equal to or exceeding $5,000,000 in excise taxes on alcohol products, or tobacco products, and cigarette papers and tubes. The Senate Finance Committee, in Report No. 98–169, dated April 2, 1984, indicated that Congress intended the term "taxpayer" to include all members of a controlled group of corporations as defined in 26 U.S.C. 1563.

ATF promulgated regulations implementing this requirement in T.D. ATF–185, published in the **Federal Register** of September 25, 1984, at 49 FR 37576.

Section 1801 of the Tax Reform Act of 1986, Pub. L. 99–514, amends 26 U.S.C. 5061 and 5703 by redefining the term "controlled group" for the purposes of the requirement to make remittances by EFT, as follows:

(1) The term "controlled group of corporations" has the meaning given in subsection (a) of 26 U.S.C. 1563, except that the words "more than 50 percent" shall be substituted for the words "at least 80 percent", and

(2) The rules for a "controlled group of corporations" apply in a similar fashion to groups which include partnerships and/or sole proprietorships. If one entity maintains more than 50% control over a group consisting of corporations and one, or more, partnerships, and/or sole proprietorships, all of the members of the controlled group are one taxpayer for the purpose of determining who is required to make remittances by EFT.

This final rule implements the current legislation by making conforming amendments in the regulations which define "controlled group" for the purposes of the requirement to make remittances by EFT. This final rule also removes expired transitional rules contained in T.D. ATF–185. In addition, the revisions of §§ 250.112a and 251.48a correct erroneous references to regulations in Part 245 which was recodified as Part 25.

The Tax Reform Act of 1986 does not contain a specific effective date for these amendments. However, the current law establishes a calendar year as the period for which an evaluation is made to determine who is required to make remittances by EFT. Therefore, ATF is imposing the amended definition of "controlled group" for tax remittances to be made beginning in the 1987 calendar year.

Regulatory Flexibility Act

The provisions of the Regulatory Flexibility Act relating to a final regulatory flexibility analysis (5 U.S.C. 604) are not applicable to this final rule because the agency was not required to publish a general notice of proposed rulemaking under 5 U.S.C. 553 or any other law.

Executive Order 12291

In compliance with Executive Order 12291, ATF has determined that this final rule is not a "major rule" since it will not result in:

(a) An annual effect on the economy of $100 million or more;

(b) A major increase in costs or prices for consumers, individual industries, Federal, state, or local government agencies, or geographic regions; or

(c) Significant adverse affect on competition, employment, investment, productivity, innovation, or on the ability of United States-based enterprises to compete with foreign-based enterprises in domestic or export markets.

Paperwork Reduction Act

The provisions of the Paperwork Reduction Act of 1980, Pub. L. 96–511, 44 U.S.C. Chapter 35, and its implementing regulations, 5 CFR Part 1320, do not apply to this final rule because no requirement to collect information is imposed.

Administrative Procedure Act

Because this final rule is a rule of procedure implementing statutorily prescribed criteria for determining who is required to pay alcohol and tobacco excise taxes by electronic fund transfer, it is unnecessary to issue this final rule with notice and public procedure thereon under 5 U.S.C. 553(b), or subject to the effective date limitation of 5 U.S.C. 553(d).

List of Subjects

27 CFR Part 19

Administrative practice and procedure, Alcohol and alcoholic beverages, Authority delegations, Claims, Chemicals, Customs duties and inspection, Electronic fund transfer, Excise taxes, Exports, Gasohol, Imports, Labeling, Liquors, Packaging and containers, Puerto Rico, Reporting and recordkeeping requirements, Research, Security measures, Spices and flavorings, Surety bonds, Transportation, Virgin Islands, Warehouses, Wine.

27 CFR Part 25

Administrative practice and procedure, Authority delegations, Beer, Claims, Electronic fund transfer, Excise taxes, Labeling, Packaging and containers, Reporting and recordkeeping requirements, Research, Surety bonds, Transportation.

27 CFR Part 240

Administrative practice and procedure, Authority delegations, Claims, Electronic fund transfer, Excise taxes, Exports, Food additives, Fruit juices, Labeling, Liquors, Packaging and containers, Reporting and recordkeeping requirements, Research, Scientific equipment, Spices and flavorings, Surety bonds, Transportation, Vinegar, Warehouses, Wine.

27 CFR Part 250

Administrative practice and procedure, Alcohol and alcoholic beverages, Authority delegations, Beer, Customs duties and inspection, Electronic fund transfer, Excise taxes, Labeling, Liquors, Packaging and containers, Puerto Rico, Reporting and recordkeeping requirements, Surety bonds, Transportation, Virgin Islands, Warehouses, Wine

27 CFR Part 251

Administrative practice and procedure, Alcohol and alcoholic beverages, Authority delegations, Beer, Customs duties and inspection, Electronic fund transfer, Excise taxes, Labeling, Liquors, Packaging and containers, Perfume, Reporting and recordkeeping requirements, Transportation, Wine

27 CFR Part 270

Administrative practice and procedure, Authority delegations, Cigars and cigarettes, Claims, Electronic fund transfer, Excise taxes, Labeling, Packaging and containers, Penalties, Reporting and recordkeeping requirements, Seizures and forfeitures, Surety bonds.

27 CFR Part 275

Administrative practice and procedure, Authority delegations, Cigarette papers and tubes, Cigars and cigarettes, Claims, Customs duties and inspection, Electronic fund transfer, Excise taxes, Imports, Labeling, Packaging and containers, Penalties, Puerto Rico, Reporting and recordkeeping requirements, Seizures and forfeitures, Surety bonds, Virgin Islands, Warehouses.

27 CFR Part 285

Administrative practice and procedure, Authority delegations, Cigarette papers and tubes, Cigars and cigarettes, Claims, Customs duties and inspection, Electronic fund transfer, Excise taxes, Packaging and containers,

Penalties, Reporting and recordkeeping requirements, Seizures and forfeitures, Surety bonds.

Drafting Information

The principal author of this document is John A. Linthicum, FAA, Wine and Beer Branch, Bureau of Alcohol, Tobacco and Firearms.

Issuance

PART 19—[AMENDED]

1. The authority citation for Part 19 continues to read as follows:

Authority: 19 U.S.C. 81c, 1311; 26 U.S.C. 5001, 5002, 5004–5006, 5008, 5041, 5061, 5062, 5066, 5101, 5111–5113, 5171–5173, 5175, 5176, 5178–5181, 5201–5207, 5211–5215, 5221–5223, 5231, 5232, 5235, 5236, 5241–5243, 5271, 5273, 5301, 5311–5313, 5362, 5370, 5373, 5501–5505, 5551–5555, 5559, 5561, 5562, 5601, 5612, 5682, 6001, 6065, 6109, 6302, 6311, 6676, 7510, 7805; 31 U.S.C. 9301, 9303, 9304, 9306.

2. Paragraph (a)(2) of § 19.524 is revised to read as follows:

§ 19.524 Payment of tax by electronic fund transfer.

(a) *General.* (1) * * *

(2) For the purposes of this section, a taxpayer includes a controlled group of corporations, as defined in 26 U.S.C. 1563, and implementing regulations in 26 CFR 1.1563–1 through 1.1563–4, except that the words "at least 80 percent" shall be replaced by the words "more than 50 percent" in each place it appears in subsection (a) of 26 U.S.C. 1563, as well as in the implementing regulations. Also, the rules for a "controlled group of corporations" apply in a similar fashion to groups which include partnerships and/or sole proprietorships. If one entity maintains more than 50% control over a group consisting of corporations and one, or more, partnerships and/or sole proprietorships, all of the members of the controlled group are one taxpayer for the purpose of determining who is required to make remittances by EFT.

* * * * *

PART 25—[AMENDED]

3. The authority citation for Part 25 continues to read as follows:

Authority: 5 U.S.C. 552(a); 19 U.S.C. 81c, 1309; 26 U.S.C. 5002, 5051–5054, 5056, 5061, 5091, 5111, 5113, 5142, 5143, 5146, 5222, 5401–5417, 5551, 5552, 5556, 5671, 5673, 5684, 6011, 6061, 6065, 6091, 6109, 6151, 6301, 6302, 6311, 6313, 6402, 6651, 6656, 6676, 6806, 7011, 7342, 7606, 7805; 31 U.S.C. 9301, 9303–9308.

4. Paragraph (a)(2) of § 25.165 is revised to to read as follows:

§ 25.165 Payment of tax by electronic fund transfer.

(a) *General.* (1) * * *

(2) For the purposes of this section, a taxpayer includes a controlled group of corporations, as defined in 26 U.S.C. 1563, and implementing regulations in 26 CFR 1.1563–1 through 1.1563–4, except that the words "at least 80 percent" shall be replaced by the words "more than 50 percent" in each place it appears in subsection (a) of 26 U.S.C. 1563, as well as in the implementing regulations. Also, the rules for a "controlled group of corporations" apply in a similar fashion to groups which include partnerships and/or sole proprietorships. If one entity maintains more than 50% control over a group consisting of corporations and one, or more, partnerships and/or sole proprietorships, all of the members of the controlled group are one taxpayer for the purpose of determining who is required to make remittances by EFT.

* * * * *

PART 240—[AMENDED]

5. The authority citation for Part 240 continues to read as follows:

Authority: 5 U.S.C. 552(a); 26 U.S.C. 5001, 5008, 5041, 5042, 5044, 5061, 5062, 5111–5113, 5121, 5122, 5142, 5143, 5173; 5206, 5214, 5215, 5332, 5251, 5353, 5354, 5356–5358, 5361, 5364–5373, 5381–5388, 5391, 5392, 5551, 5552, 5661, 5662, 5684, 6065, 6091, 6109, 6301, 6302, 6311, 6651, 6676, 7011, 7302, 7342, 7502, 7503, 7606, 7805, 7851; 27 U.S.C. 205, 31 U.S.C. 9301, 9303, 9304, 9306.

6. Section 240.591a is amended by revising paragraph (a)(2) to read as set forth below, and by removing paragraph (f), an expired transitional rule.

§ 240.591a Payment of tax by electronic fund transfer.

(a) *General.* (1) * * *

(2) For the purposes of this section, a taxpayer includes a controlled group of corporations, as defined in 26 U.S.C. 1563, and implementing regulations in 26 CFR 1.1563–1 through 1.1563–4, except that the words "at least 80 percent" shall be replaced by the words "more than 50 percent" in each place it appears in subsection (a) of 26 U.S.C. 1563, as well as in the implementing regulations. Also, the rules for a "controlled group of corporations" apply in a similar fashion to groups which include partnerships and/or sole proprietorships. If one entity maintains more than 50% control over a group consisting of corporations and one, or more, partnerships and/or sole proprietorships, all of the members of the controlled group are one taxpayer for the purpose of determining who is required to make remittances by EFT.

* * * * *

PART 250—[AMENDED]

7. The authority citation for Part 250 continues to read as follows:

Authority: 5 U.S.C. 552(a); 19 U.S.C. 81c; 26 U.S.C. 5001 5007, 5008, 5041, 5051, 5111, 5112, 5114, 5121, 5122, 5124, 5141, 5205, 5207, 5232, 5301, 5314, 5555, 6301, 6302, 6804, 7101, 7102, 7651, 7652, 7805; 27 U.S.C. 205; 31 U.S.C. 9301, 9303, 9304, 9306.

8. Section 250.112a is amended by revising the first sentence of paragraph (a)(1), by revising paragraph (a)(2) to read as set forth below, and by removing paragraph (f), an expired transitional rule.

§ 250.112a Payment of tax by electronic fund transfer.

(a) *General.* (1) Each taxpayer who was liable, during a calendar year, for a gross amount equal to or exceeding five million dollars in distilled spirits taxes combining tax liabilities incurred under this part and Parts 19 and 251 of this chapter, a gross amount equal to or exceeding five million dollars in wine taxes combining tax liabilities incurred under this part and Parts 240 and 251 of this chapter, or a gross amount equal to or exceeding five million dollars in beer taxes combining tax liabilities incurred under this part and Parts 25 and 251 of this chapter, shall use a commercial bank in making payment by electronic fund transfer (EFT) of such taxes during the succeeding calendar year. * * *

(2) For the purposes of this section, a taxpayer includes a controlled group of corporations, as defined in 26 U.S.C. 1563, and implementing regulations in 26 CFR 1.1563–1 through 1.1563–4, except that the words "at least 80 percent" shall be replaced by the words "more than 50 percent" in each place it appears in subsection (a) of 26 U.S.C. 1563, as well as in the implementing regulations. Also, the rules for a "controlled group of corporations" apply in a similar fashion to groups which include partnerships and/or sole proprietorships. If one entity maintains more than 50% control over a group consisting of corporations and one, or more, partnerships and/or sole proprietorships, all of the members of the controlled group are one taxpayer for the purpose of determining who is required to make remittances by EFT.

* * * * *

9. Immediately after § 250.266 in Subpart M, a new § 250.267 is added to read as follows:

§ 250.267 Payment of tax by electronic fund transfer.

(a) Each person bringing liquors and articles into the United States from the Virgin Islands who was liable, during a

calendar year, for a gross amount equal to or exceeding five million dollars in distilled spirits taxes combining tax liabilities incurred under this part and Parts 19 and 251 of this chapter, a gross amount equal to or exceeding five million dollars in wine taxes combining tax liabilities incurred under this part and Parts 240 and 251 of this chapter, or a gross amount equal to or exceeding five million dollars in beer taxes combining tax liabilities incurred under this part and Parts 25 and 251 of this chapter, shall use a commercial bank in making payment by electronic fund transfer (EFT), as defined in paragraph (c) of this section, of such taxes during the succeeding calendar year. Payment of such taxes by cash, check, or money order is not authorized for a person bringing liquors and articles into the United States from the Virgin Islands who is required, by this section, to make remittances by EFT. For purposes of this section, the dollar amount of tax liability is to be summarized separately for distilled spirits taxes, wine taxes, or beer taxes, and is defined as the gross tax liability on all taxable withdrawals from premises in the United States and importations (including products of the same tax class brought into the United States from Puerto Rico or the Virgin Islands) during the calendar year, without regard to any drawbacks, credits, or refunds, for all premises from which such activities are conducted.

(b) For the purposes of this section, a "person" includes a controlled group of corporations, as defined in 26 U.S.C. 1563, and implementing regulations in 26 CFR 1.1563-1 through 1.1563-4, except that the words "at least 80 percent" shall be replaced by the words "more than 50 percent" in each place it appears in subsection (a) of 26 U.S.C. 1563, as well as in the implementing regulations. Also, the rules for a "controlled group of corporations" apply in a similar fashion to groups which include partnerships and/or sole proprietorships. If one entity maintains more than 50% control over a group consisting of corporations and one, or more, partnerships and/or sole proprietorships, all of the members of the controlled group are one person for the purpose of determining who is required to make remittances by EFT.

(c) Electronic fund transfer or EFT means any transfer of funds, other than a transaction originated by check, draft, or similar paper instrument, which is initiated through an electronic terminal, telephonic instrument, or computer of magnetic tape, so as to order, instruct, or authorize a financial institution to either debit or credit an account, in accordance with procedures established by the U.S. Customs Service.

(d) Each person who is required by this section to make remittances by EFT shall make the EFT remittance in accordance with the requirements of the U.S. Customs Service.

(Approved by the Office of Management and Budget under Control Number 1512-0457)

(Act of August 16, 1954, 68A Stat. 775, as amended (26 U.S.C. 6302); Sec. 201, Pub. L. 85-859, 72 Stat. 1335, as amended (26 U.S.C. 5061))

PART 251—[AMENDED]

10. The authority citation for Part 251 is revised to read as follows:

Authority: 5 U.S.C. 552(a); 19 U.S.C. 1202; 26 U.S.C. 5001, 5007, 5041, 5051, 5054, 5061, 5111, 5112, 5114, 5121, 5122, 5124, 5201, 5205, 5207, 5232, 5273, 5301, 5313, 5555, 6302, 7805; 27 U.S.C. 203, 205); 44 U.S.C. 3504(h).

11. Section 251.48a is revised to read as follows:

§ 251.48a Payment of tax by electronic fund transfer.

(a) Each importer who was liable, during a calendar year, for a gross amount equal to or exceeding five million dollars in distilled spirits taxes combining tax liabilities incurred under this part and Parts 19 and 250 of this chapter, a gross amount equal to or exceeding five million dollars in wine taxes combining tax liabilities incurred under this part and Parts 240 and 250 of this chapter, or a gross amount equal to or exceeding five million dollars in beer taxes combining tax liabilities incurred under this part and Parts 25 and 250 of this chapter, shall use a commercial bank in making payment by electronic fund transfer (EFT), as defined in paragraph (c) of this section, of such taxes during the succeeding calendar year. Payment of such taxes by cash, check, or money order is not authorized for an importer who is required, by this section, to make remittances by EFT. For purposes of this section, the dollar amount of tax liability is to be summarized separately for distilled spirits taxes, wine taxes, or beer taxes, and is defined as the gross tax liability on all taxable withdrawals from premises in the United States and importations (including products of the same tax class brought into the United States from Puerto Rico or the Virgin Islands) during the calendar year, without regard to any drawbacks, credits, or refunds, for all premises from which such activities are conducted by the taxpayer.

(b) For the purposes of this section, a taxpayer includes a controlled group of corporations, as defined in 26 U.S.C. 1563, and implementing regulations in 26 CFR 1.1563-1 through 1.1563-4, except that the words "at least 80 percent" shall be replaced by the words "more than 50 percent" in each place it appears in subsection (a) of 26 U.S.C. 1563, as well as in the implementing regulations. Also, the rules for a "controlled group of corporations" apply in a similar fashion to groups which include partnerships and/or sole proprietorships. If one entity maintains more than 50% control over a group consisting of corporations and one, or more, partnerships and/or sole proprietorships, all of the members of the controlled group are one taxpayer for the purpose of determining who is required to make remittances by EFT.

(c) Electronic fund transfer or EFT means any transfer of funds, other than a transaction originated by check, draft, or similar paper instrument, which is initiated through an electronic terminal, telephonic instrument, or computer of magnetic tape, so as to order, instruct, or authorize a financial institution to either debit or credit an account, in accordance with procedures established by the U.S. Customs Service.

(d) An importer who is required by this section to make remittances by EFT shall make the EFT remittance in accordance with the requirements of the U.S. Customs Service.

(Act of August 16, 1954, 68A Stat. 775, as amended (26 U.S.C. 6302); Sec. 201, Pub. L. 85-859, 72 Stat. 1335, as amended (26 U.S.C. 5061))

PART 270—[AMENDED]

12. The authority citation for Part 270 is revised to read as follows:

Authority: 5 U.S.C. 552(a); 26 U.S.C. 5701, 5703-5705, 5711-5713, 5721-5723, 5741, 5751, 5753, 5761-5763, 6109, 6301, 6302, 6311, 6313, 6402, 6404, 6423, 6676, 7212, 7325, 7342, 7502, 7503, 7606, 7805; 31 U.S.C. 9301, 9303, 9304, 9306.

13. Section 270.165a is amended by revising paragraph (a)(2) to read as set forth below, and by removing paragraph (f), an expired transitional rule.

§ 270.165a Payment of tax by electronic fund transfer.

(a) *General.* (1) * * *

(2) For the purposes of this section, a taxpayer includes a controlled group of corporations, as defined in 26 U.S.C. 1563, and implementing regulations in 26 CFR 1.1563-1 through 1.1563-4, except that the words "at least 80 percent" shall be replaced by the words "more than 50 percent" in each place it appears in subsection (a) of 26 U.S.C. 1563, as well as in the implementing regulations. Also, the rules for a "controlled group of

corporations" apply in a similar fashion to groups which include partnerships and/or sole proprietorships. If one entity maintains more than 50% control over a group consisting of corporations and one, or more, partnerships and/or sole proprietorships, all of the members of the controlled group are one taxpayer for the purpose of determining who is required to make remittances by EFT.

* * * * *

PART 275—[AMENDED]

14. The authority citation for Part 275 continues to read as follows:

Authority: 5 U.S.C. 552(a); 26 U.S.C. 5701, 5703–5705, 5708, 5722, 5723, 5741, 5761–5763, 6301, 6302, 6313, 6404, 7101, 7212, 7342, 7606, 7652, 7652(a), 7805; 31 U.S.C. 9301, 9303, 9304, 9306; 44 U.S.C. 3504(h).

15. Section 275.63 is revised to read as follows:

§ 275.63 Payment of tax by electronic fund transfer.

(a) Each importer who was liable, during a calendar year, for a gross amount equal to or exceeding five million dollars in taxes on cigars, cigarettes, cigarette papers, and cigarette tubes combining tax liabilities incurred under this part and Parts 270 and 285 of this chapter, shall use a commercial bank in making payment by electronic fund transfer (EFT) of such taxes during the succeeding calendar year. Payment of such taxes by cash, check, or money order is not authorized for an importer who is required, by this section, to make remittances by EFT. For purposes of this section, the dollar amount of tax liability is defined as the gross tax liability on all taxable withdrawals and importations (including similar products brought into the United States from Puerto Rico or the Virgin Islands) during the calendar year, without regard to any drawbacks, credits, or refunds, for all premises from which such activities are conducted by the taxpayer.

(b) For the purposes of this section, a taxpayer includes a controlled group of corporations, as defined in 26 U.S.C. 1563, and implementing regulations in 26 CFR 1.1563–1 through 1.1563–4, except that the words "at least 80 percent" shall be replaced by the words "more than 50 percent" in each place it appears in subsection (a) of 26 U.S.C. 1563, as well as in the implementing regulations. Also, the rules for a "controlled group of corporations" apply in a similar fashion to groups which include partnerships and/or sole proprietorships. If one entity maintains more than 50% control over a group consisting of corporations and one, or more, partnerships and/or sole proprietorships, all of the members of the controlled group are one taxpayer for the purpose of determining who is required to make remittances by EFT.

(c) For the purposes of this section, (1) electronic fund transfer or EFT means any transfer of funds, other than a transaction originated by check, draft, or similar paper instrument, which is initiated through an electronic terminal, telephonic instrument, or computer of magnetic tape, so as to order, instruct, or authorize a financial institution to either debit or credit an account, in accordance with procedures established by the U.S. Customs Service, and (2) electronic fund transfer or EFT does not have the meaning defined in § 275.11 for use elswhere in this part.

(d) An importer who is required by this section to make remittances by EFT, shall make the EFT remittance in accordance with the requirements of the U.S. Customs Service.

(Act of August 16, 1954, 68A Stat. 775, as amended (26 U.S.C. 6302); Sec. 202, Pub. L. 85–859, 72 Stat. 1417, as amended (26 U.S.C. 5703))

16. Section 275.115a is amended by revising paragraph (a)(2) to read as set forth below, and by removing paragraph (f), an expired transitional rule.

§ 275.115a Payment of tax by electronic fund transfer.

(a) *General.* (1) * * *

(2) For the purposes of this section, a taxpayer includes a controlled group of corporations, as defined in 26 U.S.C. 1563, and implementing regulations in 26 CFR 1.1563–1 through 1.1563–4, except that the words "at least 80 percent" shall be replaced by the words "more than 50 percent" in each place it appears in subsection (a) of 26 U.S.C. 1563, as well as in the implementing regulations. Also, the rules for a "controlled group of corporations" apply in a similar fashion to groups which include partnerships and/or sole proprietorships. If one entity maintains more than 50% control over a group consisting of corporations and one, or more, partnerships and/or sole proprietorships, all of the members of the controlled group are one taxpayer for the purpose of determining who is required to make remittances by EFT.

* * * * *

PART 285—[AMENDED]

17. The authority citation for Part 285 continues to read as follows:

Authority: 5 U.S.C. 552(a); 26 U.S.C. 5701, 5703–5705, 5711, 5721–5723, 5741, 5751, 5753, 5761–5763, 6109, 6302, 6402, 6404, 6676, 7212, 7325, 7342, 7606; 31 U.S.C. 9301, 9303, 9304, 9306.

18. Section 285.27 is amended by revising paragraph (a)(2) to read as set forth below, and by removing paragraph (f), an expired transitional rule.

§ 285.27 Payment of tax by electronic fund transfer.

(a) *General.* (1) * * *

(2) For the purposes of this section, a taxpayer includes a controlled group of corporations, as defined in 26 U.S.C. 1563, and implementing regulations in 26 CFR 1.1563–1 through 1.1563–4, except that the words "at least 80 percent" shall be replaced by the words "more than 50 percent" in each place it appears in subsection (a) of 26 U.S.C. 1563, as well as in the implementing regulations. Also, the rules for a "controlled group of corporations" apply in a similar fashion to groups which include partnerships and/or sole proprietorships. If one entity maintains more than 50% control over a group consisting of corporations and one, or more, partnerships and/or sole proprietorships, all of the members of the controlled group are one taxpayer for the purpose of determining who is required to make remittances by EFT.

* * * * *

Stephen E. Higgins,
Director.
December 3, 1986.
Approved: December 17, 1986.

Francis A. Keating II,
Assistant Secretary (Enforcement).
[FR Doc. 87–126 Filed 1–6–87; 8:45 am]
BILLING CODE 4810-31-M

DEPARTMENT OF THE INTERIOR

Office of Surface Mining Reclamation and Enforcement

30 CFR Part 925

Approval of Amendments to the Missouri Permanent Regulatory Program

AGENCY: Office of Surface Mining Reclamation and Enforcement (OSMRE), Interior.

ACTON: Final rule.

SUMMARY: OSMRE is announcing the approval, with certain required changes, of proposed program amendments to the Missouri Permanent Regulatory Program (hereinafter referred to as the Missouri program) under the Surface Mining Control and Reclamation Act of 1977 (SMCRA). The amendments pertain to revegetation requirements, bond

forfeiture, penalty assessment and inspection and enforcement activities. The Federal rules at 30 CFR Part 925 codifying decisions concerning the Missouri program are being amended to implement this action.

EFFECTIVE DATE: January 7, 1987.

FOR FURTHER INFORMATION: Mr. William J. Kovacic, Field Office Director, Office of Surface Mining Reclamation and Enforcement, Kansas City Field Office, 1103 Grand Avenue, Room 502, Kansas City, Missouri 64106, Telephone: (816) 374-5527.

SUPPLEMENTARY INFORMATION:

I. Background on the Missouri Program

On November 21, 1980, the Secretary of the Interior conditionally approved the Missouri program under SMCRA for the regulation of surface coal mining operations in the State (45 FR 77027).

Information pertinent to the general background, revisions, modifications, and amendments to the proposed permanent program submission, as well as the Secretary's findings, the disposition of comments and a detailed explanation of the conditions of approval of the Missouri program can be found in the November 21, 1980 **Federal Register** (45 FR 77027). Subsequent actions concerning the conditions of approval and program amendments are identified at 30 CFR 925.10, 30 CFR 925.15, and 30 CFR 925.16.

II. Submission of Program Amendment

By a letter dated March 13, 1986, the Missouri Land Reclamation Commission formally submitted for OSMRE's approval proposed regulatory amendments pursuant to 30 CFR 732.17, concerning blaster training, examination, and certification; revegetation requirements, penalty assessment and inspection and enforcement activities. The State proposed to amend its program by revising provisions at 10 CSR 40-2.090 Revegetation Requirements (Interim Program), 10 CSR 40.8.030 Permanent Program Inspection and Enforcenent, and 10 CSR 40-8.040 Penalty Assessment. These rule changes submitted for approval were adopted by the Missouri Land Reclamation Commission on October 23, 1985, with implementation of the revised rules upon approval by OSMRE. The State regulations at 10 CSR 40-7.031(3)(B) Bond Forfeiture, published in the Missouri Register on October 7, 1985, as an Emergency Amendment, were also submitted on March 13, 1986. OSMRE published in the **Federal Register** on April 28, 1986, a proposed rule announcing receipt of the amendment and public comment period (51 FR 15794). On September 18, 1986, the State of Missouri sent a letter to OSMRE requesting that the amendment concerning Blaster Certification at 10 CSR 40-3.160 be withdrawn from consideration as a formal State program amendment.

The proposed revisions to the Missouri rules are as follows:

10 CSR 40-2.090 Revegetation Requirements

The amendment updates interim regulations by incorporating applicable permanent program standards for measuring revegetation success.

10 CSR 40-7.031(3)(B)

Missouri's Emergency Amendment allows the Director to enter into an agreement with an operator or surety whereby pit reclamation *or a portion thereof* will be accomplished in lieu of bond forfeiture.

10 CSR 40-8.030 Permanent Program Inspection and Enforcement

The amendment clarifies, revises and sets forth requirements for permanent program inspection and enforcement. Specifically, the amendment concerns the State requirements for conducting partial inspections of each inactive surface coal mining and reclamation operation; allows aerial inspections to be conducted in the inspection of surface coal mining and reclamation sites; allows for the extension of the abatement period beyond 90 days under certain circumstances; and allows the waiving of an informal public hearing when certain requirements are met.

10 CSR 40-8.040 Penalty Assessment

The amendment clarifies, revises and sets forth the method of assessment of penalties for violation of the regulatory program. Specifically, the amendment revises procedures for assessing civil penalties and establishes procedures for conducting informal assessment conferences.

III. Director's Findings

After conducting a thorough review pursuant to SMCRA and the Federal regulations at 30 CFR 732.15 and 732.17, the Director finds that the proposed amendments, with certain required changes, as submitted on March 13, 1986, are no less stringent than the requirements of SMCRA and no less effective than the corresponding Federal regulations. Only those provisions of particular interest are discussed below. Any provisions not specifically discussed below are found to no less stringent than SMCRA and no less effective than the Federal rules, although the Director may require further changes in the future as a result of Federal regulatory revisions, court decisions and his ongoing oversight of the Missouri program.

10 CSR 40-2.090(6)

Missouri's proposed initial program regulations concerning revegetation requirements do not retain the requirement that the revegetation success standard be met for two growing seasons. To be consistent with SMCRA and the Federal regulations, Missouri needs to revise its proposed regulations to be consistent with the Federal provisions in 30 CFR 715.20(f).

10 CSR 40.-3.160

On September 18, 1986, Missouri sent a letter to OSMRE requesting that the amendment concerning blaster certification rules not be acted upon by OSMRE at this time. Therefore, these rules will not be acted upon by OSMRE until resubmitted by Missouri.

10 CSR 40-8.030

Missouri's proposed inspection and enforcement regulations at 10 CSR 40-8.030(1)(D) allow for the Director to conduct aerial inspections. Also, at 10 CSR 40-8.030(7)(F) Missouri proposed circumstances which may qualify for an abatement period of more than ninety (90) days. The State provisions for aerial inspections were found to be virtually identical to and, therefore, no less effective than the Federal regulations at 30 CFR 840.11(d) which provide for aerial inspections. The State provisions for extending the abatement period are found to be the same or similar to 30 CFR 843.12(f) which provide for an abatement period of more than 90 days.

10 CSR 40-8.040(8)(B)

Missouri's proposed regulations governing informal assessment conferences are less effective than the Federal regulations at 30 CFR 845.18(b)(1) in that they do not require that the conference be held within a set time period from the date of issuance of the proposed assessment or the end of the abatement period, whichever is later. Missouri needs to include such a provision along with a proviso that failure to hold the conference within that time period shall not be grounds for dismissal in order for its assessment procedures to be similar to Federal procedures and in accordance with section 518(i) of SMCRA.

10 CSR 40-8.040(8)

Missouri's rules concerning informal assessment conference procedures do not establish, as do the Federal rules, a date by which any penalty finally assessed in a settlement agreement must be paid, nor do they state the consequences of failure to pay by that date. To be no less effective than 30 CFR 845.18(d)(2), Missouri needs to include such provisions.

IV. Public Comment

No public comments were received on the proposed amendments.

Acknowledgements were received from the following Federal agencies: Soil Conservation Service, Forest Service, Mine Safety and Health Administration, Fish and Wildlife Service, Environmental Protection Agency and the Bureau of Land Management. The disclosure of Federal agency comments is made pursuant to section 503(b)(1) of SMCRA and 30 CFR 732.17(h)(10)(i).

V. Director's Decision

The Director, based on the above findings, is approving the Missouri program amendment as submitted to OSMRE on March 13, 1986, with certain required changes listed in the Director's Findings and in Part 925. The Director is amending Part 925 of 30 CFR Chapter VII to reflect the approval of the State program amendments. This final rule is being made effective immediately to expedite the State program amendment process and to encourage States to make their programs conform to the Federal standards without undue delay. Consistency of State and Federal standards is required by SMCRA.

VI. Additional Determinations

1. *Compliance with the National Environmental Policy Act:* The Secretary has determined that, pursuant to section 702(d) of SMCRA, 30 U.S.C. 1291(d), no environmental impact statement need be prepared on this rulemaking.

2. *Executive Order No. 12291 and the Regulatory Flexibility Act:* On August 28, 1981, the Office of Management and Budget (OMB) granted OSMRE an exemption from sections 3, 4, 7 and 8 of Executive Order 12291 for actions directly related to approval or conditional approval of State regulatory programs. Therefore, this action is exempt from preparation of a Regulatory Impact Analysis and regulatory review by OMB.

The Department of the Interior has determined that this rule will not have a significant economic effect on a substantial number of small entities under the Regulatory Flexibility Act (5 U.S.C. 601 *et seq.*). This rule will not impose any new requirements; rather, it will ensure that existing requirements established by SMCRA and the Federal rules will be met by the State.

3. *Paperwork Reduction Act:* This rule does not contain information collection requirements which require approval by the Office of Management and Budget under 44 U.S.C. 3507.

List of Subjects in 30 CFR Part 925

Coal mining, Intergovernmental relations, Surface mining, Underground mining.

Dated: December 29, 1986.

Carl C. Close,

Acting Deputy Director, Operations and Technical Services.

PART 925—MISSOURI

30 CFR Part 925 is amended as follows:

1. The authority citation for Part 925 continues to read as follows:

Authority: Pub. L. 95-87, Surface Mining Control and Reclamation Act of 1977 (30 U.S.C. 1281 *et seq.*).

2. 30 CFR 925.15 is amended by adding a new paragraph (d) as follows:

§ 925.15 Approval of regulatory program amendments.

* * * * *

(d) The following amendments submitted to OSMRE on March 13, 1986, are approved effective January 7, 1987:

Missouri's rules at 10 CSR 40-2.090(6) concerning initial program revegetation requirements and success standards, Missouri's rules at 10 CSR 40-7.031(3)(B) concerning bond forfeiture, Missouri's rules at 10 CSR 40-8.030(1) concerning requirements for inspections by the Commission or Director, Missouri's rules at 10 CSR 40-8.030(6) concerning enforcement of cessation orders, Missouri's rules at 10 CSR 40-8.030(7) concerning enforcement of notices of violation, Missouri's rule at 10 CSR 40-8.030(17) concerning informal public hearings, Missouri's rules at 10 CSR 40-8.040(3) concerning point system for penalty assessment, Missouri's rules at 10 CSR 40-8.040(7) concerning assessment procedures for civil penalties, and Missouri's rules at 10 CSR 40-8.040(8) concerning informal assessment conference procedures.

3. 30 CFR 925.16 is amended by adding new paragraphs (j) and (k) as follows:

§ 925.16 Required program amendments.

* * * * *

(j) By February 28, 1988, Missouri shall revise its regulations at 10 CSR 40-2.090(6) or otherwise propose to amend its program to be consistent with the Federal provisions at 30 CFR 715.20(f). Missouri's initial program regulations at 10 CSR 40-2.090(6) concerning revegetation requirements must retain the requirement that the revegetation success standard be met for two growing seasons.

(k) By August 30, 1987, Missouri shall submit revisions to its surface coal mining reclamation regulations to require that informal assessment conferences be held within a set time period from the date of issuance of the proposed assessment or the end of the abatement period, whichever is later. Missouri shall include at 10 CSR 40-8.040(8)(B) a proviso that failure to hold such conferences within that time period shall not be grounds for dismissal and establish at 10 CSR 40-8.040(8) a date by which any penalty finally assessed in a settlement agreement must be paid and the consequences of failure to pay by that date.

[FR Doc. 87-206 Filed 1-6-87; 8:45 am]

BILLING CODE 4310-05-M

INTERSTATE COMMERCE COMMISSION

49 CFR Part 1312

[Ex Parte No. 346 (Sub-No. 22)]

Short Notice Effectiveness for Independently Filed Rail Carrier Rates

AGENCY: Interstate Commerce Commission.

ACTION: Final rules.

SUMMARY: Pursuant to 49 U.S.C. 10762(d)(1), the Commission finds that cause has been established to reduce the notice period required for independently filed new and reduced rail carrier rates to 1 day. A reduction of the notice periods for new and reduced rates will benefit shippers, railroads, and the Commission and is in furtherance of the National Transportation Policy. Rail carriers will be able to respond to intermodal and intramodal competition. Shippers will benefit from new rates becoming effective as soon as possible.

DATES: The rules will become effective February 5, 1987.

FOR FURTHER INFORMATION CONTACT: Joseph H. Dettmar (202) 275-7245.

SUPPLEMENTARY INFORMATION: Proposed rules in this proceeding were published at 51 FR 28731, August 11, 1986.

Additional information is contained in the Commission's decision. To purchase a copy of the full decision, write to T.S.

InfoSystems, Inc., Room 2229, Interstate Commerce Commission Building, Washington, DC 20423, or call 289-4357 (DC Metropolitan area) or toll free (800) 424-5403.

This action will not significantly affect either the quality of the human environment or energy conservation.

The Commission certifies that the final rules will not have a significant economic impact on a substantial number of small entities, because they will reduce the regulatory delay for rate changes and allow rail carriers to compete more effectively with other modes.

List of Subjects in 49 CFR Part 1312

Railroads, Freight tariffs.

Decided: December 19, 1986.

By the Commission, Chairman Gradison, Vice Chairman Simmons, Commissioners Sterrett, Andre, and Lamboley.

Noreta R. McGee,

Secretary.

Appendix

Chapter X of Title 49 of the Code of Federal Regulations is amended as follows:

PART 1312—REGULATIONS FOR THE PUBLICATION, POSTING AND FILING OF TARIFFS, SCHEDULES AND RELATED DOCUMENTS

1. The authority citation for 49 CFR Part 1312 is revised to read as follows:

Authority: 49 U.S.C. 10708(d) (1) and (2) and 10762, 5 U.S.C. 553.

2. A new paragraph (e)(1)(i)(E) is added to 49 CFR 1312.4 to read as follows:

§ 1312.4 Filing tariffs.

* * * * *

(e) * * *

(1) * * *

(i) * * *

(E) For independently set rates of rail carriers the general rule is 1-day's notice for reductions and new rates. *See* § 1312.39(h) for details.

* * * * *

§ 1312.39 [Amended]

3. The heading of § 1312.39(h) is revised to read as follows:

* * * * *

(h) *Freight rate tariffs and classifications of railroads, motor common carriers of property and freight forwarders-notice for independent rate changes.*

* * * * *

4. A new sentence is added to the end of § 1312.39(h)(2) to read as follows:

* * * * *

(h) * * *

(2) * * * This provision does not apply to rail freight rate tariff increases. Such filings shall be made on statutory notice, i.e., 20 days. See § 1312.4(e)(1)(i)(A).

* * * * *

[FR Doc. 87-246 Filed 1-6-87; 8:45 am]

BILLING CODE 7035-01-M

DEPARTMENT OF COMMERCE

National Oceanic and Atmospheric Administration

50 CFR Part 655

[Docket No. 70102-7002]

Atlantic Mackerel, Squid, and Butterfish Fisheries

AGENCY: National Marine Fisheries Service (NMFS), NOAA, Commerce.

ACTION: Notice of final initial specifications for 1987.

SUMMARY: NOAA issues this notice to provide final specifications for the Atlantic mackerel, squid, and butterfish fisheries for fishing year 1987. Regulations governing these fisheries require the Secretary of Commerce (Secretary) to publish his final determination of the specifications for the current fishing year. This action is intended to promote the development of the U.S. Atlantic mackerel, squid, and butterfish fisheries.

EFFECTIVE DATE: January 1, 1987.

ADDRESS: Copies of the regulatory flexibility analysis and the Mid-Atlantic Council's 1987 Annual Specifications Recommendations (September 1986) are available from John C. Bryson, Executive Director, Mid-Atlantic Fishery Management Council, Room 2115, Federal Building, 300 South New Street, Dover DE 19901.

FOR FURTHER INFORMATION CONTACT: Salvatore A. Testaverde, 617-281-3600, ext. 273.

SUPPLEMENTARY INFORMATION: Final regulations implementing Amendment 2 to the Fishery Management Plan for Atlantic Mackerel, Squid, and Butterfish Fisheries (FMP), prepared by the Mid-Atlantic Fishery Management Council (Council), were published on March 27, 1986 (51 FR 10547). Preliminary initial annual specifications for the 1987 fishing year for Atlantic mackerel, squid, and butterfish were published on November 28, 1986 (51 FR 43056) with request for public comment.

Since the notice, an additional amount of squid has been added to each of the proposed bycatch TALFFs. This is provided for in the regulations and results from the silver hake and red hake TALFFs provided for the upcoming fishing year. These amounts were not published as part of the proposed preliminary initial specifications because a review by the NMFS Northeast Fisheries Center of the silver hake and red hake stocks had to be completed before appropriate TALFFs could be established. No changes are currently recommended to hake specifications from those of the previous fishing year, 1986. Therefore, bycatch amounts have now been added to each TALFF amount for Atlantic mackerel, *Loligo* and *Illex* squids, and butterfish. Each amount will be identified in the species specifications below.

Comments Received

Comments were submitted by the Delegation of the Commission of the European Communities (DCEC); the Government of Italy on behalf of the Italian fishing industry, Unionpesca Italia, Sr.; the National Fisheries Institute (NFI); the Atlantic Offshore Fishermen's Association (AOFA); the joint venture company, International Seafood Trading Corporation (IST) with the Italian fishing industry; the representative of the Associated Vessels Services, Inc. (AVS); and the U.S. participant in the Italian joint venture, Sea Harvest, Inc.

Most of the comments concerned *Loligo* specifications. Respective comments are addressed below in the sections dealing with the specifications for which comments were directed. Unless otherwise stated, all references to squid pertain to *Loligo*.

Specifications

The following table lists the final initial annual specifications for Atlantic mackerel, squid, and butterfish in metric tons (mt) for the maximum optimum yield (Max OY), allowable biological catch (ABC), initial optimum yield (IOY), domestic annual harvest (DAH), domestic annual processing (DAP), joint venture processing (JVP), and total allowable level of foreign fishing (TALFF). These annual specifications are amounts that the Regional Director, Northeast Region, NMFS, recommended after a review of all relevant information and data, and that the Secretary has determined to be appropriate for the start of the 1987 fishing year, beginning January 1, 1987. These amounts are subject to modifications as the fishing year progresses as provided by §§ 655.21 and 655.22.

FINAL INITIAL ANNUAL SPECIFICATIONS FOR FISHING YEAR 1987

[In metric tons]

	Loligo	Illex	Atlantic mackerel	Butterfish
Specifications:				
Max OY[a]	44,000	30,000	[b]N/A	16,000
ABC[c]	37,000	22,500	294,000	16,000
IOY	23,629	15,038	154,676	13,087
DAH	23,500	15,000	[d]69,600	13,000
DAP	20,000	12,000	29,000	13,000
JVP	3,500	3,000	28,000	.....
TALFF	129	38	85,076	87

[a] These are the maximum OYs as stated in the FMP.
[b] Not applicable; depends upon $F_{0.1}$ and U.S. domestic development; see the FMP.
[c] IOY can rise to this amount.
[d] Includes 12,600 mt projected recreational catch.

Changes to the table of proposed preliminary initial annual specifications are summarized below.

Initial Optimum Yield

The IOY for Atlantic mackerel, *Loligo*, *Illex*, and butterfish have been modified. Under existing regulations, an additional amount of bycatch resulting from the newly specified hake TALFFs was added to each of the proposed TALFFs, and therefore the IOYs were increased by that amount. Likewise, a modification to the *Loligo* DAH caused the *Loligo* IOY to be decreased by 5,000 mt.

Domestic Annual Harvest

The *Loligo* preliminary DAH is reduced by 5,000 mt from 28,500 mt to 23,500 mt. Even though comments by a U.S. industry representative stated that the domestic harvet level should be maintained as proposed, NMFS has concluded that this reduction is not unreasonable given the historical harvesting performance by the domestic *Loligo* industry and the flexibility of the FMP to quickly provide additional amounts of squid to DAH from the ABC to IOY differential, if unforeseen needs arise.

Domestic Annual Processing

The *Loligo* DAP also has been reduced to 20,000 mt to reflect the lowered DAH. NMFS has concluded that a more reasonable estimate of DAH is 23,500 mt. Lowering the DAH and, consequently, the DAP, is consistent with the performance that might reasonably be expected from the industry under favorable conditions.

Total Allowable Level of Foreign Fishing

An additional amount of bycatch was allocated to each of the proposed bycatch TALFFs as follows: Atlantic mackerel, the TALFF is raised from 85,000 mt to 85,076 mt; *Loligo*, from 34 mt to 129 mt; *Illex*, from 0 mt to 38 mt; and butterfish, from 68 mt to 87 mt. These additional TALFF amounts result from the silver hake and red hake TALFFs newly established for calendar year 1987. These TALFFs trigger an additional of bycatch amounts of other species as required by § 655.21.

Explanation of Specifications and Response to Comments

One of the functions vested in Regional Fishery management Councils is to recommend specifications such as OY and its various components. Councils also are charged with reviewing these specifications on a continuing basis and revising them as appropriate.

The FMP contemplates a dynamic specification process which operates not only on an annual basis but also throughout the year. The annual specification process sets threshold amounts of IOY, DAH, and TALFF which are in the best interests of the nation with particular emphasis on developing the domestic squid harvesting and processing sectors of the industry. The adjustment mechanism, which operates throughout the year, provides the flexibility necessary to address unforeseen or unpredictable contingencies which impinge on the development of the fishery.

The ABC for *Loligo* squid has been set at 37,000 mt. This reflects the best scientific evidence regarding the maximum levels of removals that may be taken from the *Loligo* squid resource this fishing year without jeopardizing the maximum sustainable yield. This number may not represent the actual amount of squid that will be harvested in a particular year, because the ABC is determined largely by extrapolating station-specific data to the entire continental shelf. The ABC does not provide information about the seasonal and spacial distribution that would assist harvesters in locating economical, fishable concentrations. The catch statistics from the squid fishery bear strong evidence to this fact. Even with the substantial fishing power of the foreign fleets applied to waters of the Northwest Atlantic in the 1970s the maximum harvest from the fishery reached 37,000 mt only once.

The IOY for *Loligo* squid for the 1987 fishing year has been set at 23,629 mt. This is the amount of squid which NMFS believes will provide the greatest overall benefit to the United States after considering all relevant economic, social and ecological factors consistent with the Magnuson Act. This is not strictly a biological determination. The difference between IOY and ABC is not a surplus which must be made available to TALFF. Only that part of the IOY that the Council determines will not be harvested by U.S. fishermen can be made available to TALFF. The release of TALFF to foreign nations is permissive. The discretion to actually allocate the TALFF lies with the Secretary of State following consultation with the Secretary of Commerce.

The DAH for the *Loligo* fishery has been revised downward to 23,500 mt, a 5,000 mt decrease from the proposed level of DAH. While this might will appear somewhat high in terms of past catches, other factors must be considered. The highest catch by domestic fishermen was 15,943 mt in 1983. Since that time, there has been a significant increase in the capacity of the fleet due to the entry of six large catcher/processor vessels. Coupled with this increased capacity and the potential for joint ventures, an abundance of harvestable concentrations of *Loligo* squid could well result in domestic harvests which exceed the present levels of DAH. If this should happen, additional amounts may be made available to DAH by increasing IOY.

The *Loligo* TALFF remains at the minimum bycatch level prescribed by Amendment 2. The Council and NMFS believe that at this point in the fishing year any greater level of IOY to provide a larger TALFF would be detrimental to the U.S. fishing industry. First, it would perpetuate the problem, sought to be resolved through Amendment 2, of decreasing or eliminating foreign fishing on concentrations of squid which migrate inshore in the spring to be harvested by domestic fishermen. Second, increasing the IOY to provide a larger TALFF at this time is contrary to the "fish and chips" policy which the

FMP contemplates will operate on a yearly basis. Foreign nations have not yet come forward with proposals to aid in the development of the domestic industry through purchases of domestically harvested and processed squid. Until such agreements are developed and implemented, there can be no further assessment of the relevant factors that might warrant an increase in TALFF. A premature action could serve to frustrate the long-term development of our industry and threaten the substantial domestic investments in vessels and shoreside facilities. Only a wise and deliberate approach to increasing IOY as the domestic industry develops is consistent with NMFS' obligations under the Magnuson Act and the objectives of Amendment 2.

Responses to Specific Comments

Squid—Allowable Biological Catch

Comment: NFI and the AOFA recommend that NMFS reevaluate the methodologies used to determine *Loligo* ABC, abundance, and availability in order more accurately to reflect historical catch and landing data. They believe that the lack of availability of *Loligo* limits the domestic harvest. Both domestic commenters believe that ABC should be determined based upon actual harvest rather than on "extrapolated trawl data". IST argues that the ABC is set based upon the best available NMFS data; the Council's Scientific and Statistical Committee recommended no decrease in the *Loligo* ABC.

Response: NMFS agrees with IST that the ABC should remain unchanged for the 1987 fishing year, since it is based upon the best biological information. The Northeast Fisheries Center will review the suggestions of NFI and AOFA concerning ABC.

Initial Optimum Yield

Comment: The representative of the Associated Vessels Service commented that the *Loligo* IOY was set arbitrarily low. NFI supported all proposed specifications, including the *Loligo* IOY.

Response: The Magnuson Act clearly establishes the optimum yield of a fishery as a balance between competing biological, social, and economic factors (See the definition of optimum yield in section 3 (18) of the Act.) The optimum yield does not have to equal the ABC. The IOY recommended by the Council, and ultimately specified by NMFS, as provided in the FMP, results from exercise of the discretion conferred by section 303 of the Magnuson Act to determine levels of harvest which are necessary and appropriate to the conservation and management of the squid fishery.

The Council has recommended, and NMFS has specified, an IOY which allows only bycatch TALFF. This has been done purposefully to achieve the objectives of the FMP to develop the squid fishery. The Council and NMFS believe that setting the TALFF initially at the bycatch level will stimulate the U.S. industry, particularly if it has the first opportunity to harvest the squid migrating inshore in the spring. This approach fits squarely with the intent of the Magnuson Act to develop underutilized fisheries. Setting an IOY which results in a very low TALFF is a reasonable means towards this end since it diminishes foreign competition directly on the fishing grounds.

DAH—Domestic Annual Processing Components

Comment: DCEC, the Government of Italy, Sea Harvest, the representative of AVS, and IST comment that the DAH, particularly with respect to DAP, is artificially high.

Response: The DAH has been adjusted downward from 28,500 mt to 23,500 mt. This is a 5,000 mt decrease, which is consistent with both the Magnuson Act and the objectives of the FMP to develop an underutilized fishery.

The determination of domestic harvest is an estimate. Catch statistics are helpful, but are not the only information. With the development of our domestic squid fishery, domestic catches rose to a high of 15,943 mt in the 1983 fishing year, triple the harvest in the previous year. This was not the result of new harvesting capacity. It resulted from the unusually concentrated availability of squid during that fishing year of which the existing fleet took advantage. Since that time, six large catcher/processor vessels have entered the fishery. Their presence increased markedly the fleet's capacity to harvest squid.

Recent catch statistics reflect a decline in domestic catch from 1983. The harvesting capacity of the fleet is not a factor in this decline. Rather, the depressed level of catch is attributable to the lack of availability of squid in harvestable quantities. *Loligo* squid prices and demand have remained high throughout this fishing year.

The performance of processors has also been hindered by a lack of landed product resulting from the lack of abundance of commerical quantities of squid. The capacity of the processing sector to process squid is strikingly evident when in 1983–84 it handled over 12,000 mt. This represented roughly a threefold increase in the amount of squid which was processed the previous year. Since that time, the capacity of the processing sector has increased to 23,500 mt. Surveys of the industry state that the capacity of the processing sector surpasses even the *Loligo* maximum OY. The increased processing capacity of the industry both shoreside and at sea, the worldwide demand for *Loligo* squid, the outstanding orders yet to be filled, and the price all indicate that the processing sector will process most of the squid landed by domestic harvesters. To conclude that domestic processors will process less than 20,000 mt runs contrary to their recent investments of millions of dollars. These investments support the industry's assertion that it will process as much squid as it can purchase from domestic harvesters. NMFS, while believing that at some juncture DAP=DAH=OY, has tempered its specification of DAP, recognizing that it will take time for processors to develop markets to sell all of the *Loligo* squid that domestic harvesters can catch. Should these specifications fall short of what will actually be harvested and processed, the regulations provide that additional amounts of squid up to the ABC can be added to meet these needs.

DAH—Joint Venture Processing Components

No comments were received concerning the specific amounts allotted to joint venture processing. Therefore, NMFS finds that there is no basis to conclude that DAH should be reduced further downward to reduce. JVP. Past performance in the fishery supports the conclusion that processors will not process the entire DAH. The differential between what NMFS believes will be harvested and processed remains available as JVP: Atlantic mackerel, 28,000 mt; *Loligo*, 3,500 mt; and *Illex*, 3,000 mt.

Total Allowable Level of Foreign Fishing

Comment: The DCEC commented that the proposed squid TALFFs for 1987 seem to be unnecessarily restrictive in comparison to the 1986 squid TALFFs as well as in comparison to the actual domestic harvest of squid during 1986.

Response: This TALFF amount is identical to that which was set at the beginning of the last fishing year. Last year, following discussion with the Council, agreements were reached to increase IOY and thereby allow greater TALFF to be allocated to participating foreign nations based upon their contributions to U.S. fisheries development.

If NMFS in the future sets a lower DAH, a larger TALFF would not necessarily result. NMFS would first have to determine if increasing the IOY to allow a larger TALFF was consistent with the objectives of the FMP. Failing such a determination, NMFS would have to lower the IOY to a level which admits of DAH and TALFF specifications which best foster the growth of the domestic squid industry.

To the extent that this comment deals with the level of DAH, it has been responded to above.

Comment: Sea Harvest commented that the lack of squid TALFF for 1987 would eliminate their joint venture activities with U.S. harvesters. Therefore, Sea Harvest concluded that curtailment of joint venture activities would adversely affect the economic well being of participating U.S. harvesters. It stresses that without squid TALFF for Italy, the domestic *Illex* fishery will not develop.

Response: NMFS is aware of the fishing strategies employed by Italy to maintain a year-round presence with both directed fishing and joint venture activities. NMFS believes that these activities can still be maintained without an initial *Loligo* TALFF by fishing for other seasonally available species. NMFS encourages exploratory discussions with the Councils to advance agreements that will benefit the U.S. fishing industry. NMFS notes that Japan has applied for squid joint ventures without a direct fishery for squid as a *quid pro quo.* It is reasonable to consider that other nations may determine that such ventures are profitable. This will ultimately aid in the development of our domestic fishery.

Comment: Sea Harvest, Inc., commented that the Italians came to the United States with the full expectation of fishing from October through March, and were given no notice that fishing for the 1986 TALFFs would cease on December 31st.

Response: The proposed regulations implementing Amendment 2 to change the fishing year from the 12-month period April 1 to March 31, to January 1 to December 31, was published on January 22, 1986 (51 FR 2929). Notice was given that the change in the fishing year ". . . resolves the perceived problem of significant foreign fishing effort on *Loligo* squid while they are schooling prior to and during their inshore migrations, thus minimizing impacts on U.S. fishermen. The new fishing year will begin the first year when the regulations are effective." No foreign nations commented on this proposed change in the fishing year, and the rule was made final (51 FR 10547, March 27, 1986). Proposed specifications for the transitional fishing year, April 1 to December 21, 1986, were published (51 FR 24881, July 9, 1986) with comments accepted until August 8, 1986. No comments were received based on this notice; the specifications were made final by a notice (51 FR 39755, October 31, 1986) which also outlined all notices which released TALFF during 1986 to that date. In addition, the commenter and other foreign principals were participants in the public debates and discussions on Amendment 2 which detailed its impacts. Therefore, adequate notice was given to all concerned parties.

Comment: The DCEC commented that the 1986 TALFF allocations had been granted "very late" in the fishing year making it impossible to catch squid allocations granted to nations they represent before December 31, 1986.

Response: Proposed preliminary specifications for the fishing year 1986–1987 were published February 7, 1986 (51 FR 4777) including TALFF amounts for *Loligo* of 678 metric tons (mt) and *Illex,* of 678 mt. In that notice, NOAA stated that squid TALFF amounts were proposed as bycatch levels only, and that a foreign nation's performance would influence the allocation of additional TALFF amounts during the remainder of the year. Therefore, foreign nations were notified that their performance and its timing had a direct relationship to times when additional amounts of TALFF would be made available. NMFS records reflect that small initial bycatch amounts of *Loligo* were made to foreign nations before September 29, 1986, when an additional 1,442 mt of *Loligo* was released to TALFF (51 FR 34644, September 30, 1986), in anticipation of the beginning of the upcoming traditional foreign fishing season for *Loligo* in late October. A second release of 1,441 mt of *Loligo* TALFF was made October 28, 1986 (51 FR 39377), after foreign principals provided sufficient proof of purchases. Italian vessels did not commence fishing for their allocations until mid-October. Therefore, NMFS believes that it has acted in a timely fashion to provide both joint venture amounts to maintain joint ventures and TALFF amounts for the remainder of the 1986 fishing year. This conclusion is supported by the fact that Spanish vessels harvested all of the *Loligo* squid allocations made to that country before the end of the fishing year.

Comment: DCEC, the Government of Italy, Sea Harvest Inc., the representative of AVS, and IST commented that the *Loligo* TALFF should be higher. NFI opposed any TALFF.

Response: Amendment 2 intends that each new fishing year will trigger an annual specification process to set levels of IOY, DAH and TALFF which foster the growth of the domestic squid industry during that fishing year. Such levels are intended to maximize overall benefits to the nation. NMFS believes that the minimum bycatch TALFF specified in Amendment 2 is appropriate. This approach simply carries forward the practice begun last year of starting out the fishing year with only a bycatch TALFF. This is intended to induce foreign interests to stimulate the growth of the U.S. fishing industry by providing opportunities which otherwise would not exist. Last year, foreign interests prevailed in convincing the Mid-Atlantic Council to recommend that TALFF be raised in response to increased purchases of U.S.-harvested and U.S.-processed squid by foreign partners involved in joint ventures. NMFS anticipates that if additional TAFLL is to be made available, then foreign interests will have to convince fishery managers that a reapplication of the relevant criteria in light of proffered fishery agreements warrant additional TALFF. No such proposals have yet been advanced.

The changes in the fishing year and the bycatch TALFF are intended to allow domestic fishermen to harvest larger concentrations of squid as they migrate inshore in the spring. This provides further reason not to increase TALFF at this time.

Comment: DCEC, the Government of Italy, IST, the representative of AVS, and Sea Harvest, Inc., want a continuation of foreign fishing until March 31, 1987, on either the 1986 *Loligo* squid TALFF or a newly specified 1987 *Loligo* squid TALFF which reflects squid purchase performance by foreign nations in 1986. NFI opposes this proposal.

Response: The commenters believe that the language of Amendment 2 which states that the FMP is not changing the foreign fishing season but only the fishing year allows fishing on a particular year's TALFF through March 31st of the following fishing year. This is not the case.

Amendment 2, at page 67, makes it clear that the entire pattern of TALFF allocations and foreign fishing would change as a result of a change in the fishing year. It states:

> Additionally, the change in the fishing year will change the period during which earned TALFFs are allocated. During the last four months of fishing year 1983–84 and 1984–85

over 67% of *Loligo* and 39% of the *Illex* TALFFs were allocated. When the fishing year coincides with the calendar year this earned TALFF will be allocated during the fall season . . . The fishing year change will allow for the existing pattern of limited TALFF allocations as part of joint ventures to be made early in the year. To the extent that foreign nations meet or exceed their commitments in a way that determinations are made that they have earned additional TALFF allocations, these allocations could be made and fished during the fall.

The language which the commenters rely on to justify a continuation of fishing past December 31, 1986, contemplates a different situation. The term fishing season is not synonymous with fishing year. The term fishing season as used in the FMP has the same meaning as that term is used in the foreign fishing regulations at 50 CFR 611.50. The foreign fishing regulations establish precise fishing seasons in certain areas during which only certain gear may be deployed. Amendment 2 did not change these seasons. The problem which Amendment 2 was intended to resolve in changing the fishing season at a later date was foreign fishing on concentrated schools of *Loligo* squid before they migrate inshore in the spring to be harvested by domestic fishermen. Domestic fishermen have long protested that this foreign fishing depresses the domestic levels of harvest. NFI's comment reinforces this position.

At the time Amendment 2 was written, a TALFF, albeit limited, was allowed at the outset of the fishing year. Consequently, changing the fishing year did not affect this situation. Foreign fishermen could still fish in the spring of the new fishing year due to availability of TALFF and the existing spring fishing season in the foreign fishing regulations. The Council thought that if this spring fishery continued to be a problem, it would have to change the foreign fishing seasons in the foreign fishing regulations via a future amendment. A much simpler solution presented itself when the Council employed the flexible IOY setting mechanism in the FMP to begin the fishing year with a bycatch TALFF. This obviated the need to change the fishing season, since there was no longer a foreign directed squid fishery in the spring.

The Government of Italy and IST suggest that an initial TALFF of 4,000 mt be established to reward purchases by foreign nations in 1986. The FMP does not support such a TALFF. The FMP contemplates that each fishing year would be viewed separately to assure that the specifications in that particular year promote the continuing and future development of the domestic industry. Past purchase performance is not a factor in establishing TALFF in a successive fishing year, which is supposed to result in the greatest overall benefit to the nation during that fishing year.

Atlantic Mackerel

Comment: The DCEC noted that Atlantic mackerel specifications have continued to increase because of the rebuilding mackerel stock. It commented that it has continued interest in this fishery at least at the same level as in previous years.

Response: NOAA acknowledges the European Community's interest in Atlantic mackerel and notes that NMFS has approved of the EC member nation's joint ventures and directed fisheries for mackerel during 1987.

Other Comments

Comment: The representatives of AVS incorporated its comments on various **Federal Register** notices published in 1986. Specifically, it incorporates its comments dated April 26, 1985, and October 10 and November 7, 1986. They further incorporated their arguments and allegations set forth in a complaint dated November 26, 1986, filed in "Associated Vessel Services, Inc. and Stonavar Trading, Inc., *vs.* Malcolm Baldrige, *et al.*"

Response: To the extent that the comments incorporated by reference are not responded to in this notice, the commenter is referred to **Federal Register** notices dated May 15, 1985 (50 FR 20215) and November 24, 1986 (51 FR 42237).

Since the agency is involved in the pending litigation referred to above, it has been advised by the Department of Justice that it is inappropriate to respond to the arguments and allegations set forth in the subject complaint in this notice.

Comment: IST commented that NOAA failed to publish the preliminary initial specifications by November 1 and NMFS did not provide for a 30-day comment period. Further, IST asserts that this forces the Secretary to evaluate comments in less than a week, thereby leaving foreign nations no time to make decisions on planning next year's fishing operations. This denies foreign nations reasonable access to the fisheries.

Response: IST Corporation is incorrect that preliminary initial specifications must be published by November 1 of each year. Section 655.22 was amended to read, "On or about November 1" (51 FR 10547, March 27, 1986). Likewise, IST is incorrect in stating that NMFS failed to provide in the initial specifications notice a 30-day comment period. This document was filed with the Office of Federal Register on November 26, 1986. Since the comment period ended on Friday, December 26, 1986, NMFS accepted public comments through the following work day, Monday, December 29, 1986, thereby providing the public with a 30-day comment period.

NMFS is aware that setting annual specifications for these species takes time, beginning with the consideration of potential specifications by the Mid-Atlantic and the New England Councils. The public comment period attending the proposed initial annual specifications represents the termination of a lengthy decisionmaking process, during which all interested parties are given ample opportunity to be heard by the Councils and NMFS representatives. This process enables foreign nations to guage early enough what TALFFs might be expected and to plan operations accordingly.

The delay in publishing the proposed initial annual specifications resulted from NMFS' proceeding with **Federal Register** notices which (1) increased *Loligo* TALFF from 1,554 mt to 3,000 mt (51 FR 34644, September 30, 1986), thereby making available an additional 1,442 mt TALFF to foreign nations participating in joint ventures; (2) notified participating foreign nations of proposed ratios which would generate additional TALFF based upon squid purchases (51 FR 39377, October 28, 1986); (3) adjusted 1986 final specifications, thereby notifying foreign nations of remaining amounts of squid which were available to be assigned to TALFF (51 FR 39755, October 31, 1986); (4) increased *Illex* TALFF from 1,878 mt to 3,378 mt, thereby making available 2,000 mt of TALFF to foreign nations participating in the joint ventures (51 FR 39755, October 31, 1986); and (5) provided notice of the agency's final determination of squid ratios (51 FR 42237, November 24, 1986).

NMFS chose to publish these notices to afford foreign nations a reasonable opportunity to harvest any remaining amounts of squid which could be allocated as TALFF in 1986. Proceeding with the proposed 1987 initial annual specifications before November 1, 1986, could well have frustrated a foreign nations' ability to harvest squid TALFF allocations due to the delay which would have resulted in assigning available amounts of squid to TALFF. NMFS reasonably believed that conferring a real benefit to foreign nations in terms of additional 1986 TALFF far outweighed publishing the proposed 1987 initial annual

specifications on November 1, 1986, for comment.

Classification

This action is authorized by 50 CFR Part 655, and complies with Executive Order 12291.

(16 U.S.C. 1801 *et seq.*)

List of Subjects in 50 CFR Part 655

Fisheries, Reporting and recordkeeping requirements.

Dated: January 2, 1987.

William E. Evans,

Assistant Administrator For Fisheries, National Marine Fisheries Service.

[FR Doc. 87-293 Filed 1-5-87; 9:41 am]

BILLING CODE 3510-22-M

Proposed Rules

Federal Register
Vol. 52, No. 4
Wednesday, January 7, 1987

This section of the FEDERAL REGISTER contains notices to the public of the proposed issuance of rules and regulations. The purpose of these notices is to give interested persons an opportunity to participate in the rule making prior to the adoption of the final rules.

NUCLEAR REGULATORY COMMISSION

10 CFR Part 50

Production and Utilization Facilities; Timing Requirements for Full Participation Emergency Preparedness Exercises for Power Reactors Prior to Receipt of an Operating License: Extension of Comment Period

AGENCY: Nuclear Regulatory Commission.

ACTION: Proposed rule: Extension of comment period.

SUMMARY: On December 2, 1986, the Nuclear Regulatory Commission (NRC) published for public comment a proposed rule to relax the timing requirements for a full participation emergency preparedness exercise for power reactors to within two years prior to issuance of a full-power operating license from the current requirement of within one year of issuance of a full-power operating license. The notice provided that the comment period would expire on January 2, 1987. The NRC has received several requests from potential commenters to extend the comment period to enable them to prepare adequate comments on the proposed rule. In response to these requests, the NRC has decided to extend the comment period for an additional 10 days, to expire on January 12, 1987.

DATES: The comment period has been extended and now expires January 12, 1987. Comments received after that date will be considered if it is practical to do so, but assurance of consideration can be given only for comments received on or before that date.

ADDRESSES: Send written comments or suggestions to the Secretary of the Commission, U.S. Nuclear Regulatory Commission, Washington, DC 20555, Attention: Docketing and Service Branch. Copies of comments received may be examined at the NRC Public Document Room, 1717 H Street, Washington, DC.

FOR FURTHER INFORMATION CONTACT: Michael T. Jamgochian, Regulatory Applications Branch, Office of Nuclear Regulatory Research, U.S. Nuclear Regulatory Commission, Washington, DC 20555, Telephone 301-443-7657.

Dated at Washington, DC, this 31st day of December 1986.

For the Nuclear Regulatory Commission.

Samuel J. Chilk,

Secretary of the Commission.

[FR Doc. 87-204 Filed 1-6-87; 8:45 am]

BILLING CODE 7590-01-M

FEDERAL RESERVE SYSTEM

12 CFR Part 225

[Regulation Y; Docket No. R-0537]

Bank Holding Companies and Change in Bank Control; Permissibility of Real Estate Investment Activities for Bank Holding Companies and Their Direct and Indirect Nonbank Subsidiaries

AGENCY: Board of Governors of the Federal Reserve System.

ACTION: Proposed Rule.

SUMMARY: The Federal Reserve Board is soliciting comment as part of a rulemaking proceeding under the Bank Holding Company Act to permit bank companies to engage in real estate investment activities under specific conditions that have been designed to ensure that the conduct of the activity does not result in unsafe or unsound banking practices, unfair competition, conflicts of interest, or other adverse effects. The Board is seeking comment on whether real estate investment activities are closely related to banking for purposes of section 4(c)(8) of the Bank Holding Company Act when conducted within the framework set forth in this proposal. The Board also seeks comment on a number of specific conditions, including requirements that: (a) the activity be conducted only through a nonbank subsidiary of the bank holding company (the "real estate subsidiary"); (b) the real estate subsidiary be maintained independent in name and operation from any bank affiliate and maintain adequate capital; (c) a bank holding company desiring to engage in real estate investment activities comply with certain capital requirements; and (d) the real estate subsidiary's investment be limited to a passive, nonvoting equity investment. In addition, the Board seeks comment on possible limitations on the level of the holding company's exposure to this activity, including limitations regarding: (a) The amount of the holding company's investment in the real estate subsidiary and on the real estate subsidiary's leverage; and, (b) the bank holding company's total investment in real estate investment activities, including equity investments and lending by the holding company and its affiliates to any project in which the real estate subsidiary has an interest, a co-venturer or other co-participant with the real estate subsidiary in a real estate project, or purchasers of property in which the real estate subsidiary has an interest.

The Board is also seeking comment on whether, in authorizing the activity for bank holding companies subject to these proposed prudential limitations, the Board should prohibit or limit the conduct of real estate investment activities through nonbank subsidiaries of banks that are owned by bank holding companies, and should establish special capital requirements for bank holding companies that control banks directly engaged in real estate investment activities to reflect the increased risk to the bank holding company system from such activities. Moreover, the Board seeks comment on the appropriate geographic scope for the conduct of these activities.

DATE: Comments must be received by February 23, 1987.

ADDRESS: All comments, which should refer to Docket No. R-0537, should be mailed to William W. Wiles, Secretary, Board of Governors of the Federal Reserve System, Washington, DC 20551, or delivered to Room B-2223, 20th & Constitution Avenue NW., Washington, DC, between 8:45 a.m. and 5:15 p.m. weekdays. Comments may be inspected in Room B-1122 between 8:45 a.m. and 5:15 p.m. weekdays.

FOR FURTHER INFORMATION CONTACT: Virgil Mattingly, Deputy General Counsel (202/452-3430), Scott G. Alvarez, Senior Counsel (202/452-3583), Legal Division; Roger Cole, Manager (202/452-2618), Margaret Spillenkothen, Supervisory financial Analyst (202/452-2720), Division of Banking Supervision

and Regulation; or Myron Kwast, Chief, Financial Studies Section, Division of Research and Statistics (202/452-2909), Board of Governors of the Federal Reserve System, Washington, DC 20551. For the hearing impaired *only*, Telecommunications Service for the Deaf, Earnestine Hill or Dorothea Thompson, (202/452-3544).

SUPPLEMENTARY INFORMATION:

I. Introduction

During the past several years, a number of states have enacted legislation permitting banks chartered and operating in those states to conduct a wide range of real estate investment and development activities. The Board has held since 1972 that real estate investment and development activities are not closely related to banking and, therefore, are not permissible nonbanking activities for bank holding companies under the Bank Holding Company Act ("BHC Act").

In response to the recent initiatives by states, the Board, in January 1985, requested public comment on whether the Board should initiate rulemaking under section 4(c)(8) of the BHC Act to permit bank holding companies to conduct real estate investment activities or whether the Board should exercise its authority to prohibit bank holding companies from directly or indirectly conducting real estate investment activities. 50 FR 4519 (January 31, 1985). The FDIC is also reviewing a proposal in this area, and the Federal Home Loan Bank Board is considering whether to readopt its existing regulations, due to expire in March 1987, permitting federal thrift institutions limited authority to engage in real estate investment activities.

In its initial request for comment, the Board expressed a number of supervisory concerns regarding the risks, conflicts of interest, and other potential adverse effects associated with the real estate investment activities, and requested comment regarding whether these concerns could be addressed by establishing certain prudential limits within which bank holding companies could conduct real estate investment activities.

The general prudential limits put forward by the Board in its initial request for comment included:

(1) A requirement that all real estate investment activities be conducted through a separate nonbank real estate subsidiary of the bank holding company;

(2) A minimum parent bank holding company capital level;

(3) Limitations on the maximum investment a bank holding company may make in its real estate subsidiary;

(4) Limitations on the amount of leverage in the real estate subsidiary;

(5) A requirement that the investment in real estate projects be passive, and limited in size and scope;

(6) Limitations on all lending by the bank holding company and its subsidiaries to the real estate subsidiary, any project in which it has an interest, all co-venturers or partners, and any purchasers of real estate in which the real estate subsidiary has an interest; and

(7) Limitations on transactions as fiduciary. The Board also requested comment on whether bank holding companies should be authorized to conduct real estate investment activities on a nationwide basis, or only in states that permit state banks to conduct these activities, and on whether limitations on real estate investment activities imposed by individual states on state banks should apply to bank holding companies conducting real estate investiment activities within the state.

A total of 145 comments were submitted, with respondents including banks and bank holding companies, a number of bank holding company and real estate trade associations, and several state bank supervisors. The vast majority of comments—107 in total—advocated that the Board authorize bank holding companies to conduct real estate investment activities within prudential limits in order to permit bank holding companies to compete more equally with other financial institutions in the real estate lending business and to share in the rewards of real estate appreciation and development.

Twenty-nine comments urged the Board to prohibit real estate investment activities largely because of the significant risks these commenters perceived in real estate investment activities and the possibility of conflicts of interest and anticompetitive tying arrangements.

II. Possible Adverse Effects of Real Estate Investment Activities

The Board continues to believe that real estate investment activities involve a significant degree of risk beyond other activities conducted by banks and bank holding companies. Investments in real estate are often characterized by considerable variations in economic value, returns and cash flow. In addition, real estate investments are generally illiquid, particularly during periods that involve economic stress on the banking system. To the extent that the profitability of a particular real estate investment rests upon hopes for capital appreciation rather than on established operating profits, the risks of the investment become even greater.

Moreover, while the rewards of an equity investment in a real estate project may be potentially greater than the income from an extension of credit to the same project, the risks associated with an equity investment are typically greater than those associated with a loan. An equity investor is an unsecured and subordinated investor whose entire investment is at risk until the real estate project is completed or sold. A mortgage lender typically receives payments throughout the life of the real estate project and stands to lose only the difference between the outstanding loan balance plus any unpaid interest and the liquidation value of the property.

In addition to those risks, permitting banks and bank holding companies to engage in real estate investment activities raises the potential for conflicts of interest. It has been argued that the ability of banks to make prudent credit judgments and to serve as impartial providers of credit could be subject to potential conflicts of interest if the bank or its affiliate were also a real estate investor or developer. In particular, a bank's credit judgment could be inappropriately influenced by the incentive of an equity participation in a real estate project or by the fact that an affiliate of the bank or a person related to the bank, including an officer, director or principal shareholder, has made an equity investment in the real estate project. Further, a bank could be inappropriately influenced not to lend to an independent developer of a project that would be in direct competition with one in which the bank or one of its affiliates has an equity interest.

III. Proposed Prudential Limits on Real Estate Investment Activities

In light of the risks associated with real estate investment activities and the potential for conflicts of interest that may accompany these activities, the Board proposes to establish certain prudential limits for the conduct by bank holding companies of real estate investment activities. The Board requests public comment regarding whether these limitations, individually and taken together, are adequate and appropriate for addressing any issues of safety and soundness, conflicts of interest and other adverse effects that may be associated with bank holding companies conducting real estate investment activities.

1. Definition of Real Estate Investment Activities

The attached proposal would define real estate investment activities as the direct or indirect ownership of any interest in real estate, whether in the form of an equity interest, partnership, joint venture or otherwise. The proposal would permit bank holding companies to invest—through a separate nonbank real estate subsidiary and subject to the other prudential limits discussed below—in real estate of any kind and at any stage of development, including by taking an equity position in improved or unimproved real estate as part of a financing transaction, or purchasing raw land for development.[1]

The attached proposal would define real estate investment activities also to include acquisition, development and construction arrangements that have been deemed by the Notice to Practitioners from the American Institute of Certified Public Accountants to be real estate investments or real estate joint ventures.[2] The Board has also reserved the right to determine on an individual basis that the facts and circumstances surrounding a particular interest may require treatment of that interest as a real estate investment for purposes of this proposed regulation. The Board requests comment regarding whether other types of loans or investments should be included within the definition of real estate investment activities.

The Board also requests public comment regarding whether real estate investment activities should also include activities that are incidental to the ownership of real property, such as property management, maintenance and brokerage activities conducted in connection with real estate in which the bank holding company has an interest. The Board does not now propose to authorize bank holding companies to engage generally in real estate brokerage, management, or maintenance activities.

The attached proposal does not contemplate that bank holding companies would be permitted directly or indirectly to conduct, or own shares of companies that conduct, real estate syndication, construction engineering, architectural design or other similar commercial activities, or provide title insurance, whether or not these activities are conducted in connection with real estate in which the bank holding company has an interest. Bank holding companies would be permitted, however, to enter into contracts with independent third parties that provide these services in connection with real estate in which the bank holding company has an interest.

2. Separate Subsidiary

Under the proposal, a bank holding company could conduct real estate investment activities only through a separately incorporated nonbank subsidiary of the bank holding company. The proposal would permit a bank holding company to invest an aggregate of up to 5 percent of its consolidated primary capital in equity of real estate subsidiaries. Each real estate subsidiary would be required to maintain a level of capital that is fully adequate to meet its obligations and could not leverage its capital more than 5 times.

The proposal would prohibit a bank holding company from conducting real estate investment activities through a nonbank subsidiary of a holding company bank. This requirement is intended to separate the bank subsidiaries of holding companies as much as possible from real estate investment activities and any adverse effect they could have on bank subsidiaries including the direct legal obligation for losses that might result from these activities.[3]

The Board proposes, as an alternative, that nonbank subsidiaries of holding company banks be permitted to engage in real estate investment activities—where the parent bank has been authorized under state law to conduct these activities—within the limits and subject to the restrictions that would apply to the conduct of real estate investment activities by a direct nonbank subsidiary of a bank holding company.

As discussed below, these proposals would require the Board to amend its existing regulation permitting nonbank subsidiaries of holding company banks to conduct any activity that the parent bank is permitted under state law to conduct directly. The Board does not propose to amend this regulation otherwise. In this connection and as discussed below, the Board will consider public comment regarding the scope of the Board's authority under section 4 of the BHC Act to regulate the real estate investment activities of these nonbank subsidiaries of holding company banks.

The proposal would also require that the real estate subsidiary maintain adequate and separate books and records, and operate in a manner that makes clear to customers, co-investors, and others dealing with the real estate subsidiary that the obligations of the subsidiary are not insured by any agency of the federal government and are not obligations of any affiliated banks.

In order to maintain the separation between the banks in a holding company and real estate subsidiaries of the bank holding company, the Board also requests comment regarding whether the real estate subsidiary should be required (1) not to share a common name or identifying symbol with its bank affiliates, (2) not to maintain any officers, directors or employees in common with its bank affiliates, and (3) to operate at locations separate from its bank affiliates. The Board requests comment whether these restrictions are likely to lessen the potential for conflicts of interest that may result from combining real estate investment and bank lending activities and to enhance the ability of the bank affiliate to isolate itself from legal obligation for any losses that may be associated with the real estate investment activities of its affiliates. In this regard, the Board notes that the FDIC has proposed adopting similar restrictions to address these concerns.

The Board also requests comment regarding whether bank holding companies engaged in real estate investment activities should be required to submit, on a quarterly basis, information necessary to monitor the performance of real estate investment activities and their compliance with the

[1] The proposed regulation would not affect or limit the current regulatory provisions permitting bank holding companies and their subsidiary banks to invest in real estate for bank and bank holding company premises, to hold real estate acquired in satisfaction of a debt previously contracted, or to make community welfare investments, *provided* that these investments are made pursuant to, and conform with, the Board's, or other appropriate bank supervisor's regulations regarding these types of investments.

[2] These loans generally (1) provide all or substantially all of the funds necessary for a real estate venture with the borrower providing little or no equity to the venture, (2) include loan commitment and/or origination fees in the amount of the loan, (3) include accrued interest and/or fees during the term of the loan in the amount of the loan, (4) permit the lending bank to participate to a significant extent in expected residual profits of the project during the life of the project or upon sale of the property, (5) are secured by the real estate without recourse to the resources of the borrower, (6) are structured so that foreclosure as a result of delinquency is unlikely during the project's development because the borrower is not required to make any payments until the project is completed, and (7) effectively permit the lender to recover its funds only if the property is sold to an independent third party, the borrower obtains refinancing from another source, or the property is placed in service and generates sufficient net cash flow to service the debt. AICPA Notice to Practitioners, *The CPA Letter*, February 10, 1986.

[3] Under this alternative, a bank would not be authorized to establish a subsidiary under the Bank Service Corporation Act to engage in real estate investment activities. 12 U.S.C. 1861 *et seq.*

prudential limits set forth in this proposal.

3. Limitations on Size of Real Estate Investment Activities

The attached proposal would authorize bank holding companies to engage in real estate investment activities up to an aggregate limit of the higher of 25 percent of the consolidated primary capital of the bank holding company, or $250,000.[4] This aggregate investment limit would apply to the total of: (1) All direct or indirect investments, in any form, in real estate by the real estate subsidiary, and (2) all loans, advances, commitments and guarantees by the bank holding company or any of its bank or nonbank subsidiaries (i) to or for the benefit of a real estate project in which the real estate subsidiary has any equity interest, (ii) to partners, co-venturers, or contractors involved in such a real estate project, or (iii) to anyone that purchases real estate in which the real estate subsidiary has an interest, except for individual purchases of owner-occupied single family housing units.[5] This aggregate limit is intended to govern all investments, in any form, in real estate and all forms of credit or commitments to extend credit by the bank holding company or any of its bank or nonbank subsidiaries, to any party connected with real estate or a real estate project in which the real estate subsidiary has an interest. The Board requests comment regarding the appropriate level and definition of this overall limit.

As noted, in the previous section, the Board also proposes to place a limit of 5 percent of the bank holding company's primary capital on the aggregate equity investments by bank holding companies in real estate subsidiaries. Thus, a bank holding company would, under this proposal, be permitted to invest an amount equal to up to 5 percent of its primary capital in equity of any number of real estate subsidiaries. The total real estate investment activities that these real estate subsidiaries may conduct, including all related extensions of credit by the real estate subsidiary, the bank holding company, and any of its bank or nonbank subsidiaries, would then be limited to an aggregate total of 25 percent of the bank holding company's primary capital.

In determining whether a bank holding company has reached its 25 percent investment limit, real estate investments and related loans made directly by banks owned by the holding company would be deducted from the 25 percent level, even if the real estate affiliate has no interest in the real estate. This would prevent a holding company, for example, that had utilized its full 25 percent limit through a nonbank real estate subsidiary from making additional investments directly in a bank owned by the holding company. It would also preclude a holding company that conducts a significant amount of real estate investment activities directly in its banks under provisions of state law, which may, for example, permit the bank to devote up to 100 percent of its equity capital to direct real estate investment activities, from conducting additional real estate investment activities through a nonbank real estate subsidiary of the holding company.

It should be noted, however, that while the attached proposal would count the direct real estate investment activities of a bank owned by a holding company towards that holding company's aggregate real estate investment activity limit, the proposal would not limit in any way real estate investment activities that are conducted directly and entirely within a state bank owned by a bank holding company. Thus, the proposal would not limit a bank's direct and sole ownership of title to a plot of real estate acquired for any purpose permitted under state law, including for the purpose of independently contracting for the development of the property. A holding company bank's investment in real estate would be covered under the attached proposal, on the other hand, if the bank acquires voting shares of a company, including a partnership or joint venture, for the purpose of investing in real estate—as opposed to the bank acquiring title to the real estate directly.[6]

Within this general limit, the Board also seeks comment on whether to establish sublimits that would apply to particular types of real estate investment activities, such as investments in raw land, property under development, or property producing insufficient income to cover operating expenses. These sublimits may be appropriate as a means of recognizing and limiting the different degrees of risk associated with different types of real estate investment activities.

The alternative ceiling of $250,000 is proposed in order to permit small bank holding companies to participate in a meaningful way in real estate investment activities.

4. Capital Adequacy of Bank Holding Company.

The proposal would require that bank holding companies seeking to engage in real estate investment activities be in satisfactory financial condition and be particularly strongly capitalized. In the event that, after the bank holding company has commenced real estate investment activities, the bank holding company's falls below the minimum level set in the Board's Capital Adequacy Guidelines or such higher level set by the Board in approving the bank holding company's entry into this activity, it is proposed that the bank holding company be permitted to complete its ongoing real estate projects, but be prohibited from initiating new real estate investment activities until its capital position is adequate.

Because of the significant risks discussed above that are associated with real estate investment activities, the Board also proposes to amend its Capital Adequacy Guidelines to provide that funds devoted to real estate investment activities be excluded on a weighted basis (for example, at a level of 50 to 100 percent) from the calculation of the parent holding company's capital for capital adequacy purposes. The Board would take this action pursuant to authority granted under the BHC Act and the International Lending Supervision Act. 12 U.S.C. 3701 *et seq.* In this regard, the Board seeks comment on the appropriate weight at which real estate investment activities should be excluded.

The Board notes that the appropriate discount to be given to real estate investment activities in calculating capital adequacy should be influenced by the level of real estate investment activities that bank holding companies are authorized to conduct. The proposal suggests that a 50 percent discount would be appropriate in the event bank holding companies are authorized to devote approximately 25 percent of their capital to real estate investment activities. The Board requests comment regarding whether the safety and soundness concerns raised by increasing the aggregate investment

[4] As noted above, investments in bank premises, real estate acquired entirely as the result of a debt previously contracted, and similar real estate acquisitions currently permitted under the BHC Act would not be subject to the proposed investment limits provided the investments are made pursuant to, and conform with, the Board's, or other appropriate bank supervisor's, regulations regarding these types of investments.

[5] In addition, the limitations of section 23A of the Federal Reserve Act would also apply to transactions, including loans and the purchase of assets, between a *bank* and its affiliate, including an affiliate engaged in real estate investment activities. 12 U.S.C. 371c; 12 U.S.C. 1828(j).

[6] *See Security Pacific Corporation*, 72 Federal Reserve Bulletin 800 (1986).

limit above 25 percent might be adequately addressed by setting a higher discount to be given these activities in calculating the adequacy of a bank holding company's capital.

5. Adjustment to Capital for Bank Holding Companies That Control Banks Engaged in Real Estate Investment Activities

In order to address the risks to the bank holding company organization as a whole from real estate investment activities conducted directly in a holding company bank, the Board proposes, pursuant to authority granted under the BHC Act and the International Lending Supervision Act, to amend its Capital Adequacy Guidelines to provide a weighted adjustment to the primary capital of bank holding companies that control banks engaged directly in real estate investment activities. This proposal is similar to the exclusion proposed and discussed above for real estate investment activities conducted through a nonbank real estate subsidiary of the bank holding company and would provide that, in calculating the consolidated primary capital of the bank holding company, a given percentage of the amount of real estate investment activities conducted directly in the bank (up to 100 percent) would be excluded.

The Board requests comment on the appropriate discount that should be given to these activities in determining the bank holding company's capital level. In particular, the Board requests comment on whether the weighted adjustment for real estate investment activities conducted directly by a bank should be set at a level that is different from the adjustment made to the capital of the bank holding company for real estate investment activities conducted through direct nonbank subsidiaries of the holding company. This difference in weighting may be appropriate in order to reflect the greater risk posed to the bank holding company organization from conducting real estate investment activities directly in a holding company bank.

6. Limit to Essentially Passive Investment

The attached proposal includes a provision that would limit a real estate subsidiary's investment in real estate to an essentially passive, noncontrolling investment in a joint venture or partnership with third parties that are independent of, unrelated to, and do not share common officers, directors, principal shareholders, or employees with the bank holding company or any of its subsidiaries or affiliates. The provision would also limit the real estate subsidiary's investment to no more than 49 percent of the equity of the partnership or joint venture, thereby requiring that other independent investors maintain a substantial economic interest in the project.

This condition has been proposed as a method of permitting bank holding companies to participate in the financial rewards of real estate investment activities, such as real estate appreciation, while limiting the bank holding company's exposure to the risks of real estate projects. Limiting a bank holding company to a passive role may also encourage bank holding companies to seek prudent and knowledgeable co-venturers or partners who would provide the real estate project with necessary expertise and would be motivated by a substantial economic stake in the project. The Board requests public comment regarding whether this condition is appropriate. As discussed below, the Board also requests comment regarding whether this limitation may be necessary to assure that real estate investment activities of bank holding companies are closely related to banking.

As an alternative to limiting bank holding companies to passive investments, the Board requests comment on whether bank holding companies should be permitted through their real estate subsidiaries to acquire a majority interest in real estate projects and to participate actively in the management decisions of the real estate project, including decisions regarding selecting and replacing partners and contractors associated with the real estate project. The Board does not propose under either alternative to permit bank holding companies to engage in, or own shares of a company engaged in, real estate syndication, construction, engineering, architectural design or similar commercial activities.

The Board proposes under both alternatives that bank holding companies be required to conduct real estate investment activities only with third parties that are independent of, and unaffiliated with, the bank holding company or any of its subsidiaries. Under both alternatives, the bank holding company would be prohibited from conducting real estate investment activities with any project in which officers, directors, employees, or principal shareholders (including members of their immediate family) of the bank holding company or any of its bank or nonbank subsidiaries have also invested. It is proposed that this restriction would also extend to entities that provide services, including consulting, management, design, development, construction, brokerage, or any other services, in connection with real estate in which the real estate subsidiary has an interest.

7. Single Project Limitation and Phase-In Period

The proposal would also limit the total investment, including related extensions of credit as defined above, that a bank holding company may make in a single real estate project, or series of related projects, to 10 percent of the bank holding company's consolidated primary capital. The proposal would also provide that a bank holding company may not, during the first three years in which it conducts these activities, invest more than one-third of its aggregate real estate investment activity limit in real estate investment activities in any one twelve-month period, thereby establishing a three year phase-in period for real estate investment activities.

8. Geographic Limits and State Restrictions

The Board proposes to permit bank holding companies to conduct real estate investment activities on a nationwide basis, except in those states that prohibit banks and bank holding companies operating in that state from conducting these activities. This proposal is consistent with the Board's approval of other types of nonbanking activities, and permits bank holding companies to gain the benefits of geographic diversification of their real estate investment activities. This proposal also reserves the right to the states to prohibit real estate investment activities by banks and bank holding companies, provided that the state prohibition applies equally to both in-state and out-of-state banks and bank holding companies.

9. Restrictions on Lending and on Actions as Fiduciary

The Board also proposes to require that extensions of credit to any third party for the purpose of acquiring an interest in real estate in which the real estate subsidiary has an interest, or to a real estate project, partner, co-venturer, or contractor to a project in which the real estate subsidiary has an interest must be on substantially the same terms and conditions as comparable loans where the real estate subsidiary does not have an interest. As noted above, the Board proposes that the amount of these loans would be included in the

overall investment limit described above.

The Board also proposes to require that a bank holding company not purchase or lease, in its capacity as a fiduciary, co-fiduciary or managing agent, any property in which a real estate subsidiary of the holding company has an interest or which it sells or markets, unless the purchase or lease is: (1) Expressly authorized by the account instrument or court order; (2) specifically authorized by all interested parties after full disclosure of all relevant facts surrounding the fiduciary institution's relationship with the real estate subsidiary; or (3) otherwise permissible under applicable law or regulations.

IV. Legal Framework

The Board may authorize bank holding companies to engage in real estate investment activities under section 4(c)(8) of the BHC Act only if the Board determines, by order or regulation and after notice and opportunity for hearing, that real estate investment activities are so closely related to banking or managing or controlling banks as to be a proper incident thereto. 12 U.S.C. 1843(c)(8).

In *National Courier Association* v. *Board of Governors*,[7] the court suggested three standards that would aid the Board in determining whether a specific activity is closely related to banking:

(1) Banks have generally provided the proposed service in the past;

(2) The proposed services are operationally or functionally so similar to existing services or activities provided by banks and bank holding companies as to make banks and bank holding companies particularly well equipped to provide the proposed services; or

(3) Existing services that banks and bank holding companies provide are so integrally related to the proposed activity as to require its provision in a specialized form.

In determining whether a particular activity is a proper incident to banking, the Board is required to consider whether performance of the activity by a bank holding company or its affiliate can reasonably be expected to produce benefits to the public that outweigh possible adverse effects.

The Board seeks public comment regarding whether the real estate investment activities described in this proposal may be authorized by the Bank Holding Company Act to permit activities that are closely related to banking and are a proper incident thereto. 12 U.S.C. 1843(c)(8).

[7] 516 F.2d 1229 (D.C. Cir. 1975).

In this regard, several of the comments received by the Board in response to its preliminary request for comment argued that real estate investment activities are closely related to banking under the first two criteria suggested in *National Courier*. Commenters argued that banks and bank holding companies have traditionally engaged in a variety of real estate investment activities in connection with the ownership, leasing and management of bank premises. Bank holding companies also conduct a full range of real estate management and development activities as the interim owner of real estate acquired through default on a debt previously contracted ("dpc"). Similarly, bank holding companies are permitted to make equity investments in corporations or projects designed primarily to promote community welfare, including through the ownership and development of housing, and may conduct other activities that are related to real estate investment activities, such as real estate leasing activities, real estate appraisal activities, and acting as intermediary for commercial real estate equity financing. 12 CFR 225.25(b) (6), (5), (13), and (14).

Commenters also argue that real estate investment activities, particularly when conducted as a means of financing commercial real estate projects, are the functional and operational equivalents of traditional long-term debt financing activities of banks. These commenters contend that the process of determining whether to invest in a real estate project requires the same type of review of the business and economic risks of the projects as must currently be done by banks in determining whether to extend credit to the real estate project. This credit review process includes reviewing the credit worthiness and financial resources of the participants; reviewing the geographic location and design of the project; analyzing the market, sales and rental prospects, and payout/payback projections for the project; reviewing alternate sources of financing; and reviewing prospects for end-use financing.

The Board requests public comment regarding whether these and other activities currently conducted by banks and bank holding companies would support a determination that real estate investment activities, when conducted within the limits proposed here, are closely related to banking for purposes of the BHC Act. In addition, the Board requests comments regarding what, if any, restrictions should be imposed on real estate investment activities in order to limit bank holding companies to conducting real estate investment activities that are closely related to banking.

In this regard, the Board specifically requests comment regarding whether, in order to meet the closely related to banking test, real estate investment activities of bank holding companies must be limited to passive, noncontrolling, minority investments in joint ventures or limited partnerships. These types of passive investments may be structured as the functional equivalent of a loan and would limit the bank holding company's involvement in a real estate project essentially to its traditional role of an extender of credit. The Board also seeks comments regarding whether bank holding companies may be permitted under the closely related test to take a more active, entrepeneurial role in the management decisions regarding real estate projects in which the bank holding company has invested.

V. Limitations on Real Estate Investment Activities of Nonbank Subsidiaries of Holding Company Banks

As explained above, the Board requests public comment regarding whether, in light of the financial risks, potential conflicts of interest and other adverse effects potentially arising from real estate investment activities, the Board should prohibit nonbank subsidiaries of holding company banks from engaging in real estate investment activities or should permit nonbank subsidiaries of holding company banks to engage in these activities only within the limits set forth in this proposal for other nonbank subsidiaries of the holding company. Both of these proposals would involve Board action to amend § 225.22(d)(2) of Regulation Y as that regulation applies to the ownership by a holding company bank of a nonbank company engaged in real estate investment activities.

Section 225.22(d)(2) of Regulation Y (formerly § 225.4(e)) allows holding company state-chartered banks to acquire or retain *all* of the voting shares of a nonbank company so long as the nonbank company engages solely in activities in which the parent bank may engage directly, at locations at which the bank may engage in these activities. 12 CFR 225.22(d)(2). The regulation thus permits a holding company state bank to establish a wholly-owned subsidiary to engage in nonbanking activities that the state bank may conduct directly even though the activities are not otherwise permitted for bank holding companies.

The Board adopted this regulation in 1971 in order to permit holding company banks to establish nonbank subsidiaries

and to compete on an equal footing with banks that are not in a holding company. At that time, the Board stated that it would not apply the nonbanking prohibitions of the BHC Act to nonbank subsidiaries of holding company banks unless changed circumstances indicated a need to apply the provisions in order to carry out the Act's purposes or to prevent evasions of the Act. Accordingly, the Board stated that it would review the merits of that decision from time to time:

> The Board should not at this time apply the [nonbanking] restrictions [of the BHC Act] to subsidiaries of banks. This decision is believed warranted by considerations of equity between banks that are and are not members of bank holding companies and by the absence of evidence that acquisitions by holding company banks are resulting in evasions of the purposes of the Act. The merits of this decision will be reviewed by the Board from time to time in light of its experience in administering the Act. (36 FR 9292 (May 22, 1986))

The developments discussed above regarding broad state authorizations for real estate investment activities suggest that reconsideration of the Board's 1971 regulation may be appropriate, insofar as it permits holding company state banks to establish subsidiaries engaged in real estate investment activities beyond the prudential limits proposed by the Board for the parent bank holding company.

In this regard, some of the comments responding to the Board's initial request for comment regarding real estate investment activities argued that the Board has no authority under the BHC Act to regulate the activities of holding company banks and their wholly-owned subsidiaries. These commenters contend that the nonbanking provisions of section 4 of the Act, by their express terms, do not apply to a bank owned by a holding company. On this basis, these commenters argue that a subsidiary of a holding company bank is also exempt from the nonbanking provisions of the Act.

Other commenters argue that the express terms of section 4 of the Act apply to voting shares acquired or retained by a bank holding company indirectly through a holding company bank as well as to shares acquired directly by the holding company. In addition, these commenters state that, under the express terms of the Act, a bank holding company may not control any subsidiary other than a bank or a nonbank subsidiary engaged in activities that have been determined by the Board to be closely related to banking or that are subject to some other exemption under the Act. These commenters note that, under section 2(g)(1) of the Act, shares owned by any subsidiary of a bank holding company are deemed to be indirectly owned by the parent bank holding company and that any company controlled by a subsidiary bank of a bank holding company is an indirect subsidiary of the holding company.[8] In support of these arguments, it has been noted that nonbank subsidiaries of a holding company bank are not "banks" as that term is defined in the Act, that the Act contains certain exemptions for shares held by holding company banks, which would be unnecessary if the nonbanking prohibitions of the Act did not apply to shares held by a holding company bank,[9] and that long-standing Board interpretations of the Act state that voting stock held by a holding company bank is indirectly owned by the parent bank holding company.[10] It has also been argued that the legislative history of the Act supports this view.[11]

The Board will consider any further comments regarding this issue.

VI. Regulatory Flexibility Act Analysis

This proposal to expand the permissible nonbanking activities of bank holding companies is not expected to have a significant economic impact on a substantial number of small business entities within the meaning of the Regulatory Flexibility Act (5 U.S.C. 601 *et seq.*). The Board is required by section 4(c)(8) of the BHC Act, 12 U.S.C. 1843(c)(8), to determine whether nonbanking activities are closely related to banking and thus are permissible for bank holding companies. This proposal, if adopted, would permit bank holding companies to engage in limited real estate investment activities that bank holding companies are not now permitted to conduct. The proposal does not impose more burdensome requirements on bank holding companies than are currently applicable, and includes provisions designed to permit small bank holding companies to participate meaningfully in the proposed activities.

The Board believes that there are not a significant number of small bank holding companies engaged in real estate investment activities at this time. As noted, bank holding companies have not previously been permittted to engage in real estate banks to engage in these activities has been considered in a number of states, these initiatives have been taken only recently. Moreover, the proposal, if adopted, would expand the powers of bank holding companies by authorizing bank holding companies to conduct real estate investment activities within prudential limits, either by establishing a direct nonbank subsidiary of the holding company, or, under one alternative, by conducting these activities through nonbank subsidiaries of holding company banks. The proposal does not impose any limitations on the direct real estate investment activities of holding company banks or on any other activity of a holding company or its bank or nonbank subsidiaries.

The proposal requests comment regarding whether additional reporting requirements applicable to all bank holding companies that engage in the proposed activities would be appropriate.

List of Subjects in 12 CFR Part 225

Banks, banking, Federal Reserve System, Holding companies, Reporting and recordkeeping requirements.

For the reasons set out in this notice, and pursuant to the Board's authority under section 5(b) of the Bank Holding Company Act of 1956, as amended (12 U.S.C. 1844(b)), the Board proposes to amend 12 CFR Part 225 as follows:

1. The authority citation for Part 225 continues to read as follows:

Authority: 12 U.S.C. 1817(j)(13), 1818, 1843(c)(8), 1844(b), 3106, 3108, 3907 and 3909.

§ 225.25 [Amended]

2. The Board proposes to amend § 225.25 by adding a new paragraph (b)(25) to read as follows:

* * * * *

(b) * * *

(25) *Real Estate Investment Activities.* Conducting real estate investment activities, subject to the conditions and limitations set forth below. For purposes of this paragraph, real estate investment activities are defined as the direct or indirect ownership of any interest in

---

[8] 12 U.S.C. 1841(g)(1).

[9] *See* Bank Holding Company Act of 1956, Pub. L. No. 511, 4(c) (2) and (4), 70 Stat. 133, 136 (1956) (providing an exemption for voting shares held by "any banking subsidiary . . . in satisfaction of a debt previously contracted in good faith," and by "any banking subsidiary . . . in good faith in a fiduciary capacity") (Current version at 12 U.S.C. 1843(c) (2) & (4) (1980)).

[10] 12 CFR 225.101 & 102 (1956–57); *see also* Board statement made in connection with promulgation of § 225.22(d)(2) (formerly 225.4(e)) of Regulation Y, 36 FR 9292 (May 22, 1971).

[11] *See, e.g., One Bank Holding Company Legislation of 1970,* Hearings Before the Senate Committee on Banking and Currency, 91st Cong., 2d Sess. 198 (1970), (Statement of William B. Camp, U.S. Comptroller of the Currency) ("There is no legal doubt that any acquisition by the national bank subsidiary would be an indirect acquisition by the one-bank holding company.").

real estate,[12] whether in the form of an equity interest, partnership, joint venture or otherwise, including loans and profit participations deemed for accounting purposes to be an investment in real estate,[13] as well as incidental activities such as property management, maintenance, and brokerage of such real property.[14] Real estate investment activities may be conducted by a bank holding company provided that:

(i) The activity is conducted through a separately incorporated nonbank subsidiary of the bank holding company (the "real estate subsidiary");

(ii) The bank holding company and its bank subsidiaries are in satisfactory financial condition and the bank holding company is particularly strongly capitalized on a consolidated basis. In determining a bank holding company's consolidated capital, ____ (between 50 and 100) percent of the amount of real estate investment activities, including all related extensions of credit as defined in paragraph (b)(25)(vi) of this section, conducted by all nonbank subsidiaries of the bank holding company, and ____ (up to 100) percent of the amount of real estate investment activities, including all related extensions of credit as defined in paragraph (b)(25)(vi) of this section conducted directly by a bank owned by the holding company, shall be excluded. In the event the bank holding company's consolidated primary capital falls below the minimum level set forth in the Board's Capital Adequacy Guidelines (Appendix A of this Subpart), or such higher level required by the Board in approving an application under this paragraph or under its authority under the International Lending Supervision Act, the bank holding company shall not make any further investment in the real estate subsidiary and the real estate subsidiary shall not commence any additional real estate investment activities without the Board's prior approval;

(iii) The bank holding company's aggregated equity investments in all real estate subsidiaries shall not exceed 5 percent of the primary capital of the bank holding company;

(iv) The real estate subsidiary shall maintain capitalization fully adequate to meet its obligations and support its activities, and shall not incur debt in excess of 5 times the capital of the real estate subsidiary;

(v) The real estate subsidiary shall maintain adequate and separate books and records and shall operate in a manner so as to make clear to customers, co-investors, and others dealing with the real estate subsidiary that the obligations of the subsidiary are not insured by any agency of the federal government and are not obligations of any bank affiliated with the subsidiary;

(vi) The aggregate investment by a bank holding company in real estate investment activities, including all related extensions of credit, shall be limited to the higher of 25 percent of the bank holding company's consolidated primary capital or $250,000, minus the aggregate investment in real estate investment activities, including all related extensions or credit, made directly by any bank owned by the holding company. The aggregate investment in real estate investment activities, including all related extensions of credit, is defined as the total of (A) all direct and indirect investments in any form in real estate, (B) all loans, advances, commitments, and guarantees by the bank holding company or any of its bank or nonbank subsidiaries to any project, partner, co-venturer, contractor or other party with which the real estate subsidiary is associated in any manner regarding real estate in which the real estate subsidiary has a direct or indirect interest, and (C) all loans, advances, commitments and guarantees by the bank holding company or any of its bank or nonbank subsidiaries to any third party for the purpose of acquiring any interest in real estate in which the real estate subsidiary has a direct or indirect interest, except for mortgages made to individual purchasers of owner-occupied single family housing units;[15]

(vii) During the first three years after obtaining Board approval under this subpart to conduct real estate investment activities, no more than one-third of a bank holding company's aggregate investment limits described in (b)(25)(vi) of this section shall be made during any one twelve-month period;

(viii) The aggregate investment, including any related extensions of credit, as defined in (b)(25)(vi) of this section, by a bank holding company in any single real estate project or series of related projects shall not exceed 10 percent of the bank holding company's consolidated primary capital;

(ix) The real estate subsidiary shall conduct all real estate investment activities through passive, noncontrolling investments in joint ventures or partnerships (A) with third parties that are independent of, and unrelated to, the bank holding company or its subsidiaries and affiliates, and that do not share common officers, directors, employees or principal shareholders (including members of their immediate families) with the bank holding company or any of its subsidiaries or affiliates, and (B) in which the total investment by the real estate subsidiary represents no more than 49 percent of the equity of the joint venture or partnership;

(x) The real estate investment activities may be conducted on a nationwide basis, except in a state that prohibits banks and bank holding companies operating in that state from conducting these activities;

(xi) A bank holding company that operates a real estate subsidiary authorized pursuant to this paragraph, and any subsidiary of such bank holding company, shall not extend credit to any third party for the purpose of acquiring any interest in any real estate in which such real estate subsidiary has a direct or indirect interest, unless the extension of credit is consistent with safe and sound banking practices, is made on substantially the same terms, including those governing interest rate and collateral, as those prevailing at the time for comparable transactions with other persons, and does not involve more than the normal risk of repayment or present other unfavorable features;

(xii) A bank holding company that controls a real estate subsidiary authorized pursuant to this paragraph, and any subsidiary of such bank holding company, shall not extend credit to any partner, co-venturer or other entity with

[12] Real estate includes real property and any improvements to real property. Real estate investment activities do not include the ownership of real property acquired in satisfaction of a debt previously contracted, held for bank or bank holding company premises, or made as a community welfare investment, provided that these investments are made pursuant to, and conform with, the Board's or other appropriate bank supervisor's regulations regarding these types of investments.

[13] In this regard, real estate investments would include acquisition, development and construction arrangements by financial institutions that have been deemed to be real estate investment or real estate joint ventures under the Notice to Practitioners by the American Institute of Certified Public Accountants (January 28, 1986). The Board may also determine in individual cases that the facts and circumstances of a particular interest warrant treatment of the interest as an investment in real estate for purposes of this subparagraph.

[14] Real estate investment activities do not include directly or indirectly engaging in, or owning or controlling a company engaged in, real estate syndication, construction, engineering, architectural design, or other similar commercial activities.

[15] This limit does not apply to investments in bank premises, real estate acquired and held in good faith in satisfaction of debts previously contracted, and real estate acquired as part of a community welfare project of the type permitted under § 225.22(b)(6) of this subpart, provided these investments are made pursuant to and conform with the Board's or other appropriate bank supervisor's regulations regarding these investments.

which the real estate subsidiary is associated by joint venture, contract or otherwise in connection with real estate in which such real estate subsidiary has a direct or indirect interest, unless the extension of credit is consistent with safe and sound banking practices, is made on substantially the same terms, including those governing interest rate and collateral, as those prevailing at the time for comparable transactions with other persons, and does not involve more than the normal risk of repayment or present other unfavorable features; and

(xiii) A bank holding company and any of its subsidiaries shall not purchase or lease, as fiduciary, co-fiduciary, or managing agent on behalf of an account for which the holding company or subsidiary has investment discretion, any property or interest in property in which a real estate subsidiary of the holding company has an interest or which it sells or markets, unless the purchase or lease is: (A) Expressly authorized by the account instrument or court order; (B) specifically authorized by all interested parties after full disclosure of all relevant facts surrounding the fiduciary institution's relationship with the property or interest in property; or (C) otherwise permissible under applicable law or regulations.

3. The Board proposes to amend § 225.22(d)(2) by adding the following at the end of that section:

§ 225.22 [Amended]

* * * * *

(d) * * *

(2) * * *

Notwithstanding the above, a state bank owned by a bank holding company may not directly or indirectly acquire or retain securities of a company engaged in real estate investment activities as defined in § 225.25(b)(25).

* * * * *

Appendix A—[Amended]

4. The Board proposes to amend Appendix A to 12 CFR Part 225 by adding the following at the end of the Appendix:

Treatment of Investments in Real Estate Investment Activities for the Purpose of Determining the Capital Adequacy of Bank Holding Companies

In its proposal to authorize bank holding companies to engage in real estate investment activities, the Board expressed its concern that these activities involved a significant degree of risk beyond other activities conducted by banks and bank holding companies in part because of the illiquid nature of real estate; the considerable variation in economic value, returns and cash flow that often characterize investments in real estate; and the greater risks associated with an equity investment as compared to a traditional bank loan. Based on these supervisory concerns, the Board has imposed prudential limits on the size and conduct of real estate investment activities of bank holding companies.

In addition, the Board believes that the amount of real estate investment activities conducted by a bank holding company and any of its direct or indirect bank and nonbank subsidiaries must be considered in evaluating the capital adequacy of the bank holding company. In this regard, in determining the capital adequacy of a bank holding company, ____ (between 50 and 100) percent of the amount of the real estate investment activities conducted by nonbank subsidiaries of the bank holding company, including related extensions of credit by the parent bank holding company or any bank or nonbank subsidiaries, shall be excluded from the calculation of the parent bank holding company's consolidated primary capital. Similarly, ____ (up to 100) percent of the amount of the real estate investment activities conducted directly by a bank owned by a bank holding company, including related extensions of credit by the bank holding company or any bank or nonbank subsidiary, shall be excluded from the calculation of the parent bank holding company's consolidated primary capital. For purposes of these calculations, real estate investment activities, including related extensions of credit, shall be defined as in § 225.25(b)(25) of this part.[7] Real estate investment activities and related extensions of credit shall be deemed to be made by a bank owned by a bank holding company for purposes of applying these weighted capital adjustments if the holding company bank holds any interest, in any form, in the real estate.

Board of Governors of the Federal Reserve System, December 31, 1986.

James McAfee,

Associate Secretary of the Board.

[FR Doc. 87-183 Filed 1-6-87; 8:45 am]

BILLING CODE 6210-01-M

[7] This limit does not apply to investments in bank premises, real estate acquired and held in good faith in satisfaction of debts previously contracted, and real estate acquired as part of a community welfare project of the type permitted under § 225.22(b)(6) of this subpart, provided these investments are made pursuant to and conform with the Board's or other appropriate bank supervisor's regulations regarding these investments.

DEPARTMENT OF TRANSPORTATION

Federal Aviation Administration

14 CFR Part 39

[Docket No. 86-CE-74-AD]

Airworthiness Directives; Beech Aircraft Corporation Model A36TC Bonanza Airplanes

AGENCY: Federal Aviation Administration (FAA), DOT.

ACTION: Notice of proposed rulemaking (NPRM).

SUMMARY: This Notice proposes to adopt a new Airworthiness Directive (AD), applicable to Beech Model A36TC airplanes. This AD would require the modification of the fuel system in accordance with Beechcraft Mandatory Service bulletin No. 2033, dated August 1985. Investigations of accidents involving Model A36TC airplanes following loss of engine power revealed that flooding may occur as a result of the pilots' inadvertent selection of the emergency fuel pump switch to "ON" while attempting to retract the flaps.

The potential exists for inappropriate pilot actions in normal and emergency procedures which could cause engine combustion to cease due to an excessively rich fuel-air mixture. The requirements of this AD will reduce the potential for power interruptions due to flooding by removing the emergency fuel pump switch from the current location adjacent to the flap switch.

DATE: Comments must be received on or before February 20, 1987.

ADDRESSES: Beech Mandatory Service Bulletin No. 2033, dated August 1986, applicable to this AD may be obtained from Beech Aircraft Corporation, P.O. Box 85, Wichita, Kansas 67201; Telephone (316) 681-9111; or the Rules Docket at the address below. Send comments on the proposal in duplicate to Federal Aviation Administration, Central Region, Office of the Regional Counsel, Attention: Rules Docket No. 86-CE-74-AD, Room 1558, 601 East 12th Street, Kansas City, Missouri 64106. Comments may be inspected at this location between 8 a.m. and 4 p.m., Monday through Friday, holidays excepted.

FOR FURTHER INFORMATION CONTACT: Mr. James M. Peterson, Aerospace Engineer, Aircraft Certification Office, ACE-140W, FAA, 1801 Airport Road, Room 100, Mid-Continent Airport, Wichita, Kansas 67209; Telephone (316) 946-4427.

SUPPLEMENTARY INFORMATION:

Comments Invited

Interested persons are invited to participate in the making of the proposed rule by submitting such written data, views or arguments as they may desire. Communications should identify the regulatory docket or notice number and be submitted in duplicate to the address specified above. All communications received on or before the closing date for comments specified above will be considered by the Director before taking action on the proposed rule. The proposals contained in this notice may be changed in the

light of comments received. Comments are specifically invited on the overall regulatory, economic, environmental and energy aspects of the proposed rule. All comments submitted will be available both before and after the closing date for comments in the Rules Docket for examination by interested persons. A report summarizing each FAA public contact concerned with the substance of this proposal will be filed in the Rules Docket.

Availability of NPRMs

Any person may obtain a copy of this Notice of Proposed Rulemaking (NPRM) by submitting a request to the Federal Aviation Administration, Central Region, Office of the Regional Counsel, Attention: Airworthiness Rules Docket No. 86-CE-74-AD, Room 1558, 601 East 12th Street, Kansas City, Missouri 64106.

Discussion: Investigations of accidents involving Model A36TC airplanes following loss of engine power revealed that flooding may occur as a result of the pilots' inadvertent selection of the emergency fuel pump switch to "ON" while attempting to retract the flaps. This is primarily due to the location of the emergency fuel pump switch in close proximity to the flap switch on the upper-center instrument sub-panel.

The flaps are typically raised shortly after take-off, before significant altitude is gained. Therefore, if the engine failed due to incorrect use of the emergency fuel pump, sufficient time may not exist to identify the cause, rectify the situation and restart the engine before the aircraft strikes the earth.

Beech Aircraft Corporation issued Beechcraft Mandatory Service Bulletin No. 2033 in August 1985 to minimize the possibility of engine flooding. This Service Bulletin modifies the Model A36TC fuel system, allowing the function of the emergency fuel pump switch to be incorporated with the auxiliary fuel pump switch. The emergency pump switch is thus removed from the upper-center instrument sub-panel.

Since the condition described is likely to exist or develop in all Beech Model A36TC airplanes, the AD would require the modification of the fuel system per Beechcraft Mandatory Service Bulletin No. 2033, dated August 1985.

The FAA has determined there are approximately 271 airplanes affected by the proposed AD. The cost of modification in accordance with the proposed AD is estimated to be $640 per airplane. The total cost to the private sector is therefore estimated to be $173,440. The FAA has determined that, due to the small cost per airplane, this AD will not have a significant economic impact on a substantial number of small entities.

Therefore, I certify that this action (1) is not a major rule under the provisions of Executive Order 12291, (2) is not a significant rule under DOT Regulatory Policies and Procedures (44 FR 11034; February 26, 1979) and (3) if promulgated, will not have a significant economic impact on a substantial number of small entities under the criteria of the Regulatory Flexibility Act. A copy of the draft regulatory evaluation has been prepared for this action and has been placed in the public docket. A copy of it may be obtained by contacting the Rules Docket at the location provided under the caption **"ADDRESSES"**.

List of Subjects in 14 CFR Part 39

Air transportation, Aviation safety, Aircraft, Safety.

The Proposed Amendment

PART 39—[AMENDED]

Accordingly, pursuant to the authority delegated to me by the Administrator, the Federal Aviation Administration proposes to amend § 39.13 of Part 39 of the FAR as follows:

1. The authority citation for Part 39 continues to read as follows:

Authority: 49 U.S.C. 1354(a), 1421 and 1423; 49 U.S.C. 106(g) Revised, Pub. L. 97-449, January 12, 1983); and 14 CFR 11.89.

2. By adding the following new AD:

Beech: Applies to Model A36TC (serial numbers EA-1 through EA-241, and EA-243 through EA-272) airplanes certificated in any category.

Compliance: Required within the next 100 hours time-in-service after the effective date of this AD, unless already accomplished.

To reduce the possibility of engine flooding caused by inadvertent pilot action, accomplish the following:

(a) Modify the fuel system as described in Beechcraft Mandatory Service Bulletin No. 2033, dated August 1985.

(b) Airplanes may be flown in accordance with FAR 21.197 to a location where this AD may be accomplished.

(c) An equivalent means of compliance with this AD may be used if approved by the Manager, Aircraft Certification Office, Federal Aviation Administration, 1801 Airport Road, Room 100, Mid-Continent Airport, Wichita, Kansas 67209.

All persons affected by this directive may obtain a copy of the document applicable to this AD upon request to Beech Aircraft Corporation, 9709 East Central, P.O. Box 85, Wichita, Kansas 67201; or the FAA, Office of the Regional Counsel, Room 1558, 601 East 12th Street, Kansas City, Missouri 64106.

Issued in Kansas City, Missouri, on December 22, 1986.

Edwin S. Harris,

Director, Central Region.

[FR Doc. 87-231 Filed 11-6-87; 8:45 am]

BILLING CODE 4910-13-M

---

14 CFR Part 39

[Docket No. 86-NM-220-AD]

Airworthiness Directives; Boeing Model 747 Series Airplanes

AGENCY: Federal Aviation Administration (FAA), DOT.

ACTION: Notice of proposed rulemaking (NPRM).

SUMMARY: This notice proposes to amend an existing airworthiness directive (AD), applicable to certain Boeing Model 747 airplanes, that requires repetitive inspections for cracking, and repair as necessary, of body frame structure and skin in the nose (Section 41) of the fuselage. The manufacturer has issued a revision to the service bulletin referenced in the AD, which recommends inspections and repair that, in certain areas, are more rigorous than those required by the existing AD. This action would expand the scope of the AD to correspond to the service bulletin by requiring additional inspections and accelerated compliance intervals to ensure necessary inspection of the airplanes.

DATES: Comments must be received on or before February 2, 1987.

ADDRESSES: Send comments on the proposal in duplicate to the Federal Aviation Administration, Northwest Mountain Region, Office of the Regional Counsel (ATTN: ANM-103), Attention: Airworthiness Rules Docket No. 86-NM-220-AD, 17900 Pacific Highway South, Seattle, Washington 98168. The service bulletin specified in this AD may be obtained from the Boeing Commercial Airplane Company, P.O. Box 3707, Seattle, Washington 98124. This information may be examined at the FAA, Northwest Mountain Region, 17900 Pacific Highway South, Seattle, Washington, or the Seattle Aircraft Certification Office, 9010 East Marginal Way South, Seattle, Washington.

FOR FURTHER INFORMATION CONTACT: Mr. Owen Schrader, Airframe Branch, ANM-120S; telephone (206) 431-1923. Mailing address: FAA, Northwest Mountain Region, 17600 Pacific Highway South, C-68966, Seattle, Washington 98168.

SUPPLEMENTARY INFORMATION:

Comments Invited

Interested persons are invited to participate in the making of the proposed rule by submitting such written data, views or arguments as they may desire. Communications should identify the regulatory docket number and be submitted in duplicate to the address specified above. All communications received on or before the closing date for comments specified above will be considered by the Administrator before taking action on the proposed rule. The proposal contained in this notice may be changed in light of the comments received. All comments submitted will be available, both before and after the closing date for comments, in the Rules Docket for examination by interested persons. A report summarizing each FAA-public contact concerned with the substance of this proposal will be filed in the Rules Docket.

Availability of NPRM

Any person may obtain a copy of this Notice of Proposed Rulemaking (NPRM) by submitting a request to the FAA, Northwest Mountain Region, Office of the Regional Counsel (Attn: ANM-103), Attention: Airworthiness Rules Docket No. 86-NM-220-AD, 17900 Pacific Highway South, C-68966, Seattle, Washington 98168.

Discussion: The FAA issued AD 86-23-06, Amendment 39-5467 (51 FR 41473; November 17, 1986), to require certain inspections for cracking, and repair as necessary, of body frame structure and skin in Section 41 of the fuselage on certain Boeing Model 747 series airplanes in accordance with the procedures of Boeing Service Bulletin 747-53A2265.

Boeing Service Bulletin 747-53A2265, Revision 3, dated July 29, 1986, was issued after publication of the Notice of Proposed Rulemaking (NPRM) for AD 86-23-06. Revision 3 expanded the scope of the inspections of the area behind the flight engineer's station beyond those proposed in the NPRM for AD 86-23-06. The Service Bulletin now recommends that only the initial inspection behind the flight engineer's panel may be deferred. Ad 86-23-06 currently allows deferral of this area at every other inspection interval, based upon a negative finding on the opposite side of the airplane. In addition, the FAA inadvertently omitted a requirement from AD 86-23-06 to perform the inspections required by paragraph D. and E. of the AD concurrently with those required by paragraph F. or G., as appropriate, for affected airplanes.

At the time of the adoption of the final rule, the FAA concurred with provisions specified in Revision 3 of the service bulletin, but noted that to incorporate them in the final rule would have expanded the scope of the rule beyond that which was proposed in the NPRM, without providing appropriate public notice and opportunity to comment. Therefore, at this time, the FAA is proposing an amendment to AD 86-23-06 that would expand the requirements to require the additional inspections and accelerated compliance times described in Revision 3 of Boeing Service Bulletin 747-53A2256, dated July 29, 1986.

In addition, this proposal would update certain references to Revision 2 of the service bulletin in the existing AD to "Revision 3." Except as discussed above, these are merely editorial changes and would impose no additional requirements or economic burden.

Since the situation that required issuance of AD 86-23-06 is likely to exist or develop on other airplanes of the same type design, the FAA is proposing to amend the existing airworthiness directive to accelerate and expand the scope of the inspections.

Since this Notice proposes to accelerate the initial compliance time for certain inspections of certain airplanes, without changing the means of compliance, it would not increase the cost of compliance with the existing AD. This Notice also proposes to require the accomplishment of certain repetitive inspections that the existing AD allows to be deferred if certain conditions are met; since it is unknown whether those conditions would be met, it cannot be determined whether the proposed requirement would impose any additional costs over those presently imposed by the existing AD.

For the reasons discussed above, the FAA has determined that this document (1) involves a proposed regulation which is not major under Executive Order 12291 and (2) is not a significant rule pursuant to the Department of Transportation Regulatory Policies and Procedures (44 FR 11034; February 26, 1979); and it is certified under the criteria of the Regulatory Flexibility Act that this proposed rule, if promulgated, will not have a significant economic impact on a substantial number of small entities because few, if any, Boeing Model 747 airplanes are operated by small entities. A copy of a draft regulatory evaluation prepared for this action is contained in the regulatory docket.

List of Subjects in 14 CFR Part 39

Aviation safety, Aircraft.

The Proposed Amendment

PART 39—[AMENDED]

Accordingly, pursuant to the authority delegated to me by the Administrator, the Federal Aviation Administration proposes to amend § 39.13 of Part 39 of the Federal Aviation Regulations as follows:

1. The authority citation for Part 39 continues to read as follows:

Authority: 49 U.S.C. 1354(a), 1421 and 1423; 49 U.S.C. 106(g) (Revised Pub. L. 97-449; January 12, 1983); and 14 CFR 11.89.

2. By amending AD 86-23-06, Amendment 39-5467 (51 FR 41473; November 17, 1986), by revising paragraphs F., G., I., J., and O. to read as follows:

"F. Except as provided in paragraph O., below, for airplanes, line numbers 1 through 603, immediately after the effective date of this Amendment, or within the next 500 landings after December 15, 1986, or prior to the accumulation of 16,000 landings after December 15, 1986, or prior to the accumulation of 16,000 landings, whichever occurs later, perform the following visual or X-ray inspections for cracking of the body frames and adjacent skin in the following areas on both sides of the airplane, in accordance with Boeing Service Bulletin 747-53A2265, Revision 3, dated July 29, 1986, or later FAA-approved revisions:

1. From body station 200 through 220 between stringers 0 and 13A; from body station 220 through 240 between stringers 0 and 6; from body station 240 through 400 between stringers 14 and 19; from body station 240 through 400 between stringers 26 and 34; from body station 400 through 480 between stringers 30 and 34; from body station 320 through 340 between stringers 0 and cabin window upper sill; from body station 400 through 520 between stringer 0 and 6; at body station 240 between stringer 34L and 34R in belly area; and at body station 320 between stringer 34 to nose wheel well.

2. Perform the inspections required by paragraphs D. and E., above

G. Except as provided in paragraph O., below, for airplanes, line numbers 1 though 603, immediately after the effective date of this AD, or within the next 500 landings after December 15, 1986, or prior to the accumulation of 19,000 landings, whichever occurs later, perform visual or X-ray inspections for cracking of the body frames and adjacent skin from body station 140 through 520 in accordance with Boeing Service Bulletin 747-53A2265, Revision 3, dated July 29, 1986, or later FAA-approved revisions.

I. If X-ray results give indications of cracking, visually inspect the structure to determine the full extent of frame cracking in accordance with the following schedule:

1. Prior to further flight for all findings that indicate possible skin cracking; cracks exceeding the limits of Boeing Service Bulletin 747-53A2265, Revision 3, dated July

29, 1986, in one or more frames; or cracking in two or more adjacent frames.

2. Within 150 landings for all findings that indicate partial severance of one frame not exceeding the limits of Boeing Service Bulletin 747-53A2265, Revision 3, dated July 29, 1986, provided no adjacent skin cracking or adjacent frame cracking is found.

J. If any cracking is found by visual inspection, repair in accorance with FAA-approved procedures prior to further flight, unless the conditions set forth in Paragraph H., Section III, of Boeing Service Bulletin 747-53A2265, Revsion 3, dated July 29, 1986, or later FAA-approved revision, are met. Visually inspect adjacent structures in accordance with Section III, of the service bulletin and repair, if necessary.

O. The initial upper deck right side inspection from body station 340 to 400 need be accomplished only if (1) any cracking is found, or if any cracking has previously repaired, on upper deck left side from body station 340 to 400, excluding any body station 360 frame web cracking at left stringer 3 adjacent to the crew escape hatch lower forward corner; or (2) if left side structure was previously replaced or modified."

Issued in Seattle, Washington, on December 29, 1986.

Frederick M. Isaac,
Acting Director,
Northwest Mountain Region.

[FR Doc. 87-232 Filed 1-6-87; 8:45 am]

BILLING CODE 4910-13-M

---

14 CFR Part 39

[Docket No. 86-CE-71-AD]

Airworthiness Directives; Cessna 150, A150, F150, FA150, FRA150, 152, F152, FA152, A152, 170, 172, F172, FR172, P172, R172, 175, 177, F177, 180, 182, F182, FR182, R182, TR182, 185, A185, 188, A188, T188, 190, 195, 205, 206, P206, U206, TU206, TP206, 207, T207, 210, P210, T210, 336, 337, F337, FP337, P337, T337, and T303 Series Airplanes

AGENCY: Federal Aviation Administration (FAA), DOT.

ACTION: Notice of proposed rulemaking (NPRM).

SUMMARY: This notice proposes to adopt a new Airworthiness Directive (AD), applicable to Cessna 150, A150, F150, FA150, FRA150, 152, F152, FA152, A152, 170, 172, F172, FR172, P172, R172, 175, 177, F177, 180, 182, F182, FR182, R182, TR182, 185, A185, 188, A188, T188, 190, 195, 205, 206, P206, U206, TU206, TP206, 207, T207, 210, P210, T210, 336, 337, F337, FP337, P337, T337, and T303 series airplanes which would require inspections, maintenance, and possible parts replacement on seat rails and seat assemblies on the affected models. The FAA has received reports of cracking and wear in the seat rails which could prevent positive engagement of the seat locking pins. The actions of this AD will preclude seat slippage and possible resulting loss of the airplane.

DATES: Comments must be received on or before April 7, 1987.

ADDRESSES: Cessna Single Engine Service Information Bulletin SE83-6 dated March 11, 1983, applicable to this AD may be obtained from Cessna Aircraft Company, Customer Service, P.O. Box 1521, Wichita, Kansas 67201 or the Rules Docket at the address below. Send comments on the proposal in duplicate to Federal Aviation Administration, Central Region, Office of the Regional Counsel, Attention: Rules Docket No. 86-CE-71-AD, Room 1558, 601 East 12th Street, Kansas City, Missouri 64106. Comments may be inspected at this location between 8 a.m. and 4 p.m., Monday through Friday, holidays excepted.

FOR FURTHER INFORMATION CONTACT: Mr. Douglas W. Haig, Aerospace Engineer, FAA, Wichita Aircraft Certification Office, 1801 Airport Road, Room 100, Wichita, Kansas 67209; Telephone (316) 946-4409.

SUPPLEMENTARY INFORMATION:

Comments Invited

Interested persons are invited to participate in the making of the proposed rule by submitting such written data, views or arguments as they may desire. Communications should identify the regulatory docket or notice number and be submitted in duplicate to the address specified above. All communications received on or before the closing date for comments specified above will be considered by the Director before taking action on the proposed rule. The proposals contained in this notice may be changed in the light of comments received. Comments are specifically invited on the overall regulatory, economic, environmental and energy aspects of the proposed rule. All comments submitted will be available both before and after the closing date for comments in the Rules Docket for examination by interested persons. A report summarizing each FAA public contact concerned with the substance of this proposal will be filed in the Rules Docket.

Availability of NPRMs

Any person may obtain a copy of this Notice of Proposed Rulemaking (NPRM) by submitting a request to the Federal Aviation Administration, Central Region, Office of the Regional Counsel, Attention: Airworthiness Rules Docket No. 86-CE-71-AD, Room 1558, 601 East 12th Street, Kansas City, Missouri 64106.

Discussion: During the past five years there have been 12 accidents/incidents in which slippage of the pilot's seat was considered contributory. The models involved were the Cessna 105K, 150L, 152, 170A, 172F, 172M, 175, 180, 180A, 182H, 185E, and A185F series airplanes. In addition, during this same period there were 21 malfunction or defect reports, involving 14 airplanes, describing cracked and worn seat rails which could possibly lead to failures and seat slippage. These occurrences have been on Cessna 150, 152, 172, 175, 180, 182, 185, and 210 series airplanes. Defective seat rails, whether cracked or worn could possibly result in a seat locking pin slippage out of place. As a result, the FAA issued Notice of Proposed Rulemaking (Docket 86-CE-02-AD) which was published in the **Federal Register** on January 31, 1986 (51 FR 3985). This NPRM affected the same airplanes as those proposed herein. The proposed AD would have required relocation of seat stops on certain models, installation of a warning placard concerning proper locking of the seats on all models and inspection of the seat rails and locking mechanism for all models. This action was proposed to prevent seat slippage and possible loss of the airplane. Based on public comment and re-evaluation of the FAA position, this NPRM was withdrawn in the **Federal Register** on November 13, 1986 (51 FR 41112), for the following reasons: (1) An unsafe condition may be created for some pilots if the seat stops were relocated; (2) the information on the proposed placard is already a preflight checklist item; and (3) the crack inspection criteria called out was not adequate to prevent seat slippage. However, the seat slippage continues to occur. Since the NPRM of January 31, 1986, the FAA became aware of criteria relating to seat rail wear tolerances. This criteria is the basis for the action proposed in this Notice.

Since the condition described is likely to exist or develop on other airplanes of the same design, the proposed AD would require inspection, maintenance, and repair as necessary in accordance with the criteria given in this proposal. The FAA has determined there are approximately 145,000 airplanes affected by the proposed AD. The cost of inspecting these airplanes, as required by the proposed AD, is estimated to be $90. The annual cost of inspections is estimated to be $13,050,000 to the private sector. The cost is so small that compliance with the proposal will not have a significant financial impact on any small entities owning affected airplanes.

Therefore, I certify that this action (1) is not a major rule under the provisions

of Executive Order 12291, (2) is not a significant rule under DOT Regulatory Policies and Procedures (44 FR 11034; February 26, 1979) and (3) if promulgated, will not have a significant economic impact on a substantial number of small entities under the criteria of the Regulatory Flexibility Act. A copy of the draft regulatory evaluation has been prepared for this action and has been placed in the public docket. A copy of it may be obtained by contacting the Rules Docket at the location provided under the caption "**ADDRESSES**".

List of Subjects in 14 CFR Part 39

Air transportation, Aviation safety, Aircraft, Safety.

The Proposed Amendment

PART 39—[AMENDED]

Accordingly, pursuant to the authority delegated to me by the Administrator, the Federal Aviation Administration proposes to amend § 39.13 of Part 39 of the FAR as follows:

1. The authority citation for Part 39 continues to read as follows:

Authority: 49 U.S.C. 1354(a), 1421 and 1423; 49 U.S.C. 106(g), (Revised, Pub. L. 97-449, January 12, 1983); and 14 CFR 11.89.

2. By adding the following new AD:

Cessna:

Applies to the following airplanes, certificated in any category:

Models	Serial No.
150A, 150B, 150C, 150D, 150E, 150F, 150G, 150H, 150J, 150K, 150L, 150M.	15059019 thru 15079405
A150K, A150L, A150M.	A1500001 thru A1500734
152, A152	All.
170, 170A, 170B	18000 thru 27169
172, 172A, 172B, 172C, 172D, 172E, 172F, 172G, 172H, 172I, 172K, 172L, 172M, 172N, 172P, 172Q.	All.
P172	P17257120 thru P17257189
R172, R172E, R172F, R172G, R172H, R172J.	All.
R172K	R1722000 thru R1723454
175, 175A	55001 thru 56777
175B, 175C	17556778 thru 17557119
177, 177A, 177B, 177RG.	All.
180, 180A	30000 thru 32999
180A, 180B, 180C	50000 thru 50911
180D, 180E, 180F, 180G, 180H, 180J, 180K.	18050912 thru 18053203
182, 182A, 182B, 182C, 182D, 182E, 182F, 182G, 182H, 182J, 182K, 182L, 182M, 182N, 182P, 182Q, 182R, T182, R182, TR182.	All.
185, 185A, 185B, 185C, 185D, 185E, A185E, A185F.	All.
188, A188, A188A, 188B, A188B, T188C.	All.
190, 195, 195A, 195B	7001 thru 7994; 16000 thru 16183
205, 205A	205-0001 thru 205-0577
206, U206, U206A, U206B, U206C, U206D, U206E, U206F, U206G, TU206A TU206B, TU206C, TU206D, TU206E, TU206F, TU206G.	All.
P206, P206A, P206B, P206C, P206D, TP206A, TP206B, TP206C, TP206D.	P206-0001 thru P206-0603
P206E, TP206E	P20600604 thru P20600647
207, T207, 207A, T207A.	All.
210, 210A, 210B, 201C, 210D, 210E, 210F, 210G, 210H, 210J, 210K, 210L, 210M, 210N, P210N, T210F, T210G, T210H, T210J, T210K, T210L, T210M, T210N, 210R, T210R, P210R.	All.
336	336-0001 thru 336-0195
337, 337A, 337B, 337C, 337D, 337E, 337F, 337G, 337H, T337C, T337D, T337E, T337F, T337G, T337H, P337H, T337H-SP.	All.
T303	All.
F150F, F150G, F150H, F150J, F150K, F150L, F150M, FA150K, FA150L, FRA150L FRA150M.	All.
FA152, F152	All.
FP172	FP172-0001 thru FP172-0003
F172D, F172E, F172F, F172G, F172H, F172K, F172L, F172M, F172N, F172P, FR172E, FR172F, FR172G, FR172H, FR172J, FR172K.	All.
F177RG	All.
F182P, F182Q	All.
FR182G	All.
F337E, F337F, F337G, F337H.	All.
FP337	All.

Compliance: Required as indicated after the effective date of this AD, unless already accomplished.

To assure proper engagement of the seat locking mechanism and to preclude inadvertent seat slippage, accomplish the following on each pilot and copilot seat and all associated seat rails:

(a) For airplanes having less than 1,000 hours time-in-service (TIS) on the effective date of this AD, prior to accumulating 1,100 hours TIS; for airplanes with 1,000 hours or more TIS on the effective date of this AD, within the next 100 hours TIS; and at each 100 hours TIS thereafter for airplanes operating for compensation or hire, or at each annual inspection for airplanes operating under FAR 91 not being operated for compensation or hire, accomplish the following:

(1) Measure each hole in the seat track(s) for excessive wear. If any wear dimension across any hole exceeds 0.330 inches (see Figure 1a), prior to further flight, the seat track must be replaced.

(2) Lift up on the forward edge of the seat to eliminate all vertical play. In this position, measure the depth of engagement of each seat pin. If the engagement of any pin is less than 0.15 inches (see Figure 1b), prior to further flight, replace or repair necessary components to achieve a set pin engagement of 0.15 inches or greater.

(3) Visually inspect seat rollers for flat spots. Assure all rollers and washers turn freely on their axle bolts (or bushings if installed) and move freely on the seat rails. Prior to further flight, replace rollers having flat spots and any worn washers. If there is any binding between the bores of the rollers, washers, and axle bolts (or bushings if installed), prior to further flight, remove, clean, and reinstall.

Note.—Do not lubricate rollers, washers, axle bolts, or bushings as the lubricant will attract dust and other particles which can cause binding.

(4) Visually inspect the seat rail holes for dirt and any debris which may preclude engagement of the seat pin(s). Prior to further flight, remove any such material.

(5) Measure the wall thicknesses of the roller housing and the tang (see Figure 1b). If the tang thickness has worn to less than ½ the housing thickness, prior to further flight, replace the roller housing.

(6) Check the spring(s) that keeps the lock pin(s) in position in the track hole(s) for positive engagement action. Prior to further flight, replace any spring which does not provide positive engagement.

(7) Visually inspect the seat tracks for cracks in accordance with Cessna Single Engine Service Information Letter SE83-6, dated March 11, 1983. Prior to further flight, replace seat rails exceeding the crack criteria as specified in SE83-6 with an airworthy rail.

(b) Airplanes may be flown in accordance with FAR 21.197 to a location where this AD may be accomplished.

(c) An equivalent method of compliance with this AD may be used if approved by the Manager, Wichita Aircraft Certification Office, Federal Aviation Administration, 1801 Airport Road, Room 100, Wichita, Kansas 67209; Telephone (316) 946-4400.

All persons affected by this directive may obtain copies of the documents referred to herein upon request to Cessna Aircraft Company, Customer Service, P.O. Box 1521, Wichita, Kansas 67201 or Federal Aviation Administration, Office of the Regional Counsel, Room 1558, 601 East 12th Street, Kansas City, Missouri 64106.

Issued in Kansas City, Missouri, on December 22, 1986.

Edwin S. Harris,

Director, Central Region.

BILLING CODE 4910-13-M

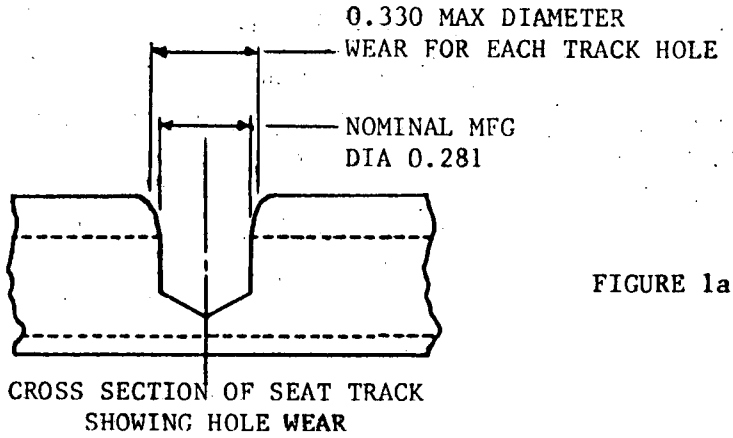

FIGURE 1a

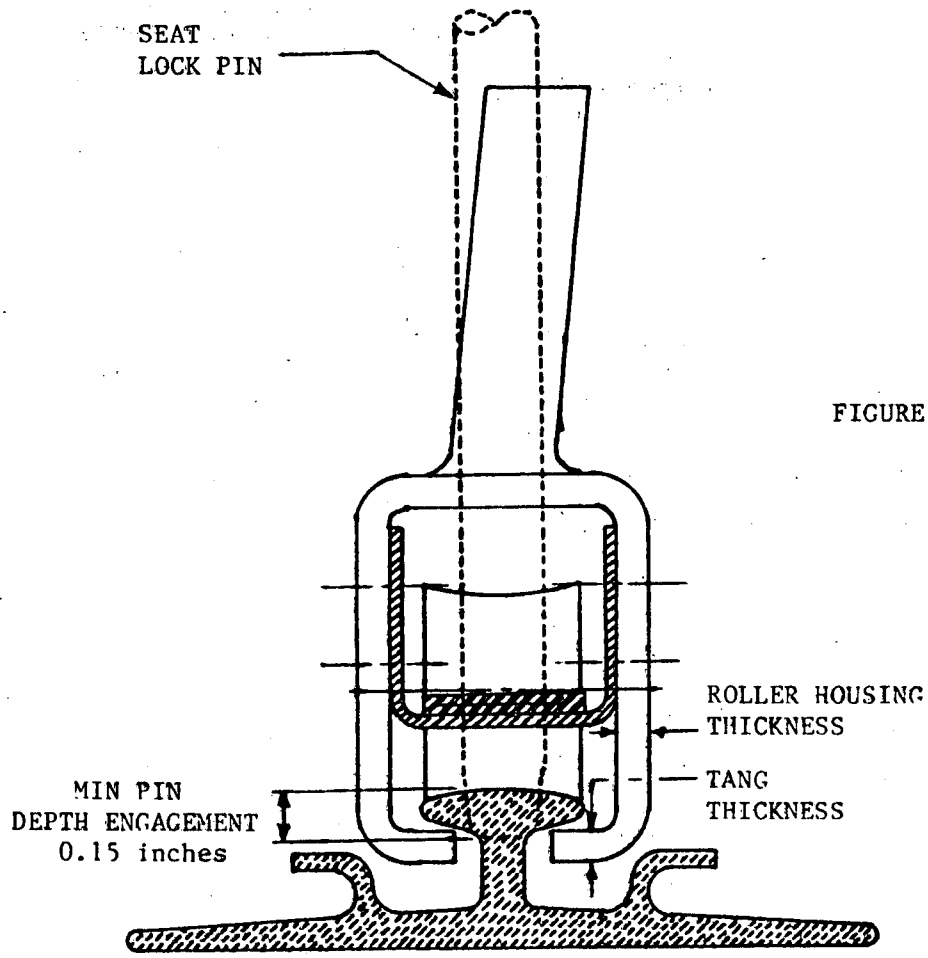

FIGURE 1b

FIGURE 1

[FR Doc. 87-233 Filed 1-6-87; 8:45 am]
BILLING CODE 4910-13-C

14 CFR Part 39

[Docket No. 86-NM-226AD]

Airworthiness Directives; McDonnell Douglas Model DC-9-10, -20, -30, -40, and C-9 (Military) Series Airplanes, Fuselage Numbers 1 Through 757 and 773

AGENCY: Federal Aviation Administration (FAA), DOT.

ACTION: Notice of proposed rulemaking (NRRM).

SUMMARY: This notice proposes a new airworthiness directive (AD), applicable to certain McDonnell Douglas DC-9 series airplanes, which would require inspections for cracks in the elevator control columns, and replacement or repair, as necessary. This proposal is prompted by a report of a cracked Captain's (LH) elevator control column. This condition, if not corrected, could result in the loss of longitudinal control of the airplane.

DATES: Comments must be received no later than February 23, 1987.

ADDRESSES: Send comments on the proposal in duplicate to Federal Aviation Administration, Northwest Mountain Region, Office of the Regional Counsel (Attn: ANM-103), Attention: Airworthiness Rules Docket No. 86-NM-226-AD, 17900 Pacific Highway South, C-68966, Seattle, Washington 98168. The applicable service information may be obtained from McDonnell Douglas Corporation, 3855 Lakewood Boulevard, Long Beach, California 90846, Attention: Director, Publications and Training, C1-L65 (54-60). This information may be examined at the FAA, Northwest Mountain Region, 17900 Pacific Highway South, Seattle, Washington, or 4344 Donald Douglas Drive, Long Beach, California.

FOR FURTHER INFORMATION CONTACT: Mr. Michael N. Asahara, Sr., Aerospace Engineer, Airframe Branch, ANM-122L, FAA, Northwest Mountain Region, Los Angeles Aircraft Certification Office, 4344 Donald Douglas Drive, Long Beach, California 90908; telephone (213) 514-6319.

SUPPLEMENTARY INFORMATION:

Comments Invited

Interested persons are invited to participate in the making of the proposed rule by submitting such written data, views, or arguments as they may desire. Communications should identify the regulatory docket number and be submitted in duplicate to the address specified above. All communications received on or before the closing date for comments specified above will be considered by the Administrator before taking action on the proposed rule. The proposals contained in this Notice may be changed in light of the comments received. All comments submitted will be available, both before and after the closing date for comments, in the Rules Docket for examination by interested persons. A report summarizing each FAA/public contact concerned with the substance of this proposal will be filed in the Rules Docket.

Availability of NPRM

Any person may obtain a copy of this Notice of Proposed Rulemaking (NPRM) by submitting a request to the FAA, Northwest Mountain Region, Office of the Regional Counsel (Attn: ANM-103), Attention: Airworthiness Rules Docket No. 86-NM-226-AD, 17900 Pacific Highway South, C-68966, Seattle, Washington 98168

Discussion

A DC-9 operator has reported that, during a routine preflight inspection by the flight crew, the Captain's control column was found severed in approximately the area where the column attaches to the control column torque tube. The control column failure occurred on a DC-9-41 airplane which had accumulated a total or 32,269 landings. The failure involved the Captain's control column (P/N 5614272-1), which had cracked at the torque tube in an area just forward of the pulley cluster. A metallurgical investigation was performed on the failed column, and revealed that two fatigue failures occurred: a cracked on the right rear corner of the column, approximately 1.00 inch long; and a crack on the front right corner of the column approximately 1.50 inches long. The remainder of the fracture was ductile with no apparent crack arrest point detected. This condition, if not corrected, could result in the loss of longitudinal control of the airplane.

The FAA has reviewed and approved McDonnell Douglas DC-9 Alert Service Bulletin A27-288, dated November 10, 1986, which described procedures for dye penetrant inspection of the Captain's and First Officer's control columns for cracks, and replacement of cracked columns.

Since this condition is likely to exist or develop on other airplanes of this same type design, an airworthiness directive (AD) is proposed which would require dye penetrant inspections for cracks of the Captain's and First Officer's control column, and replacement, as necessary, in accordance with the service bulletin previously mentioned, or repair in a manner approved by the FAA.

It is estimated that 758 airplanes of U.S. registry would be affected by this AD, that it would take approximately 4 manhours per airplane to accomplish the required inspections, and that the average labor cost would be $40 per manhour. Based on these figures, the total cost impact of the AD on U.S. operators is estimated to be $121.280.

For threse rasons, the FAA has determined that this document (1) involves a proposed regulation which is not major under Exectuve Order 12291 and (2) is not a significant rule pursuant to the Department of Transportation Regulatory Policies and Procedures (44 FR 11034; February 26, 1979); and it is further certified under the criteria of the Regulatory Flexibility Act that this proposed rule, if promulgated, will not have a significant economic impact on a substantial number of small entities because few, if any, Model DC-9 airplanes are operated by small entities. A copy of a draft regulatory evaluation prepared for this action is contained in the regulatory docket.

List of Subjects in 14 CFR Part 39

Aviation safety, Aircraft.

The Proposed Amendment

PART 39—[AMENDED]

Accordingly, pursuant to the authority delegated to me by the Administrator, the Federal Aviation Administration proposed to amend § 39.13 of Part 39 of the Federal Aviation Regulations (14 CFR 39.13) as follows:

1. The authority citation for Part 39 continues to read as follows:

Authority: 49 U.S.C. 1354(a), 1421 and 1423; 49 U.S.C. 106(g) (Revised) Pub. L. 97-449, January 12, 1983); and 14 CFR 11.89.

2. By adding the following new airworthiness directive:

McDonnell Douglas: Applies to McDonnell Douglas Model DC-9-10, -20, -30, -40, and C-9 (Military) series airplanes, Fuselage Number 1 through 757 and 773, certificated in any category. Compliance required as indicated, unless previously accomplished.

To detect cracks and prevent failures of the control columns, P/N 5614272-1 or 5614272-2, accomplish the following:

A. Perform a dye inspection of both control columns, P/N 5614272-1 5614272-2, for cracks, in accordance with McDonnell Douglas DC-9 Alert Service Bulletin A27-288, dated November 10, 1986 (hereinafter referred to as ASB 27-288), or later FAA-approved revisions, in accordance with the following schedule;

Accumulated landings as of November 10, 1986	Initial inspection from November 10, 1986
Over 60,000	1,500 landings.
40,000 to 59,999	2,000 landings.
30,000 to 39,999	2,500 landings.
20,000 to 29,999	3,000 landings.
Under 20,000	3,800 landings.

1. If no cracks are found, accomplish repetitive inspections at intervals not to exceed 3,800 landings, until such time as the procedures described in paragraph A.3., below, are accomplished.

2. If crack(s) are found in either control column (Captain's or First Officer's), accomplish either of the following:

a. Remove Captain's or First Officer's control column, P/N 5614272-1 or 5614272-2, and replace with new production control column, P/N's 5614272-501, -503, or 5614272-502, -504, respectively, in accordance with ASB 27-288, or later FAA-approved revisions; or

b. Repair in a manner approved by the Manager, Los Angeles Aircraft Certification Office, FAA, Northwest Mountain Region.

3. Replacement of Captain's or First Officer's control column, P/N's 5614272-1 or 5614272-2, with new control columns, P/N's 5614272-501, -503, or 5614272-502, -504, respectively, constitutes terminating action for the requirements of this AD.

B. Alternate means of compliance which provides an acceptable level of safety may be used when approved by the Manager, Los Angeles Aircraft Certification Office, FAA, Northwest Mountain Region.

C. Upon the request of an operator, an FAA Maintenance Inspector, subject to prior approval of the Manager, Los Angeles Aircraft Certification Office, FAA, Northwest Mountain Region, may adjust the repetitive inspection intervals specified in this AD to permit compliance at an established inspection period of the operator if the request contains substantiating data to justify the change for that operator.

All persons affected by this proposal who have not already received the appropriate service documents from the manufacturer may obtain copies upon request to the McDonnell Douglas Corporation, 3855 Lakewood Boulevard, Long Beach, California 90846, Attention: Director, Publications and Training, C1-L65 (54-60). These documents may be examined at the FAA, Northwest Mountain Region, 17900 Pacific Highway South, Seattle, Washington, or at 4344 Donald Douglas Drive, Long Beach, California.

Issued in Seattle, Washington, on December 29, 1986.

Frederick Isaac,

Acting Director, Northwest Mountain Region.

[FR Doc. 87-234 Filed 1-6-87; 8:45 am]

BILLING CODE 4910-13-M

14 CFR Part 71

[Airspace Docket No. 86-ACE-08]

Proposed Alteration of Transition Area; Storm Lake, IA

AGENCY: Federal Aviation Administration (FAA), DOT.

ACTION: Notice of proposed rulemaking (NPRM).

SUMMARY: This Notice proposes to alter the 700-foot transition area at Storm Lake, Iowa, to provide additional controlled airspace for aircraft executing a new instrument approach procedure to the Storm Lake, Iowa, Municipal Airport, utilizing the Storm Lake Nondirectional Radio Beacon (NDB) as a navigational aid.

DATES: Comments must be received on or before February 4, 1987.

ADDRESSES: Send comments on the proposal to: Federal Aviation Administration, Manager, Traffic Management and Airspace Branch, Air Traffic Division, ACE-540, 601 East 12th Street, Kansas City, Missouri 64106, Telephone (816) 374-3408.

The official docket may be examined at the Office of the Regional Counsel, Central Region, Federal Aviation Administration, Room 1558, 601 East 12th Street, Kansas City, Missouri.

An informal docket may be examined at the Office of the Manager, Traffic Management and Airspace Branch, Air Traffic Division.

FOR FURTHER INFORMATION CONTACT: Lewis G. Earp, Airspace Specialist, Traffic Management and Airspace Branch, Air Traffic Division, ACE-540, FAA, Central Region, 601 East 12th Street, Kansas City, Missouri 64106, Telephone (816) 374-3408.

SUPPLEMENTARY INFORMATION:

Comments Invited

Interested persons may participate in the proposed rulemaking by submitting such written data, views or arguments as they may desire. Communications should identify the airspace docket number, and be submitted in duplicate to the Traffic Management and Airspace Branch, Air Traffic Division, Federal Aviation Administration, 601 East 12th Street, Kansas City, Missouri 64106. All communications received on or before the closing date for comments will be considered before action is taken on the proposed amendment. The proposal contained in this Notice may be changed in light of the comments received. All comments received will be available both before and after the closing date for comments in the Rules Docket for examination by interested persons.

Availability of NPRM

Any person may obtain a copy of this NPRM by submitting a request to the Federal Aviation Administration, Traffic Management and Airspace Branch, 601 East 12th Street, Kansas City, Missouri 64106, or by calling (816) 374-3408.

Communications must identify the notice number of this NPRM. Persons interested in being placed on a mailing list for further NPRMS should also request a copy of Advisory Circular No. 11-2A which describes the application procedure.

Discussion

The FAA is considering an amendment to Subpart G, § 71.181, of the Federal Aviation Regulations (14 CFR 71.181), by altering the 700-foot transition area at Storm Lake, Iowa. To enhance airport usage, the City of Storm Lake, Iowa, is relocating a nondirectional radio beacon. Therefore, a new instrument approach procedure to the Storm Lake, Iowa, Municipal Airport is being established, utilizing the Storm Lake NDB as a navigational aid. The establishment of this new instrument approach procedure, based on this navigational aid, entails alteration of the transition area at Storm Lake, Iowa, at and above 700 feet above ground level, within which aircraft are provided air traffic control service. The intended effect of this action is to ensure segregation if aircraft, using the approach procedure, under Instrument Flight Rules (IFR), and other aircraft operating under Visual Flight Rules (VFR). Section 71.181 of Part 71 of the Federal Aviation Regulations was republished in Handbook 7400.6B, dated January 2, 1986.

The FAA has determined that this proposed regulation only involves an established body of technical regulations for which frequent and routine amendments are necessary to keep them operationally current. It, therefore—(1) is not a "major rule" under Executive Order 12291; (2) is not a "significant rule" under DOT Regulatory Policies and Procedures (44 FR 11034; February 26, 1979); and (3) does not warrant preparation of a regulatory evaluation as the anticipated impact is so minimal. Since this is a routine matter that will only affect air traffic procedures and air navigation, it is certified that this rule, when promulgated, will not have a significant economic impact on a substantial number of small entities under the criteria of the Regulatory Flexibility Act.

List of Subjects in 14 CFR Part 71

Aviation safety, Transition areas.

The Proposed Amendment

PART 71—[AMENDED]

Accordingly, pursuant to the authority delegated to me, the Federal Aviation Administration (FAA) proposes to amend Part 71 of the FAR (14 CFR Part 71) as follows:

1. The authority citation for Part 71 continues to read as follows:

Authority: 49 U.S.C. 1348(a), 1354(a), 1510; Executive Order 10854; 49 U.S.C. 106(g) (Revised Pub. L. 97-449, January 12, 1983); 14 CFR 11.69.

2. By amending § 71.181 as follows:

Storm Lake, IA

That airspace extending upward from 700 feet above the surface within a 6.5 mile radius of the Storm Lake, Iowa Municipal Airport (Lat. 42°35'47" N., Long. 95°14'22" W.) within 3 miles each side of the 167°(T) 162°(M) bearing from the Storm Lake Municipal Airport extending from the 6.5 mile radius area to 7.5 miles south of the airport.

Issued in Kansas City, Missouri, on December 22, 1986.

Wayne A. Smith,

Acting Manager, Air Traffic Division.

[FR Doc. 87-237 Filed 1-6-87; 8:45 am]

BILLING CODE 4910-13-M

---

14 CFR Part 71

[Airspace Docket No. 86-AEA-8]

Proposed Alteration of Control Zone, Patuxent River, MD

AGENCY: Federal Aviation Administration (FAA), DOT.

ACTION: Notice of proposed rulemaking.

SUMMARY: This notice proposes to alter the published description of Patuxent River, MD to reflect minor adjustments to the parameters of the control zone. The intended effect of this action is to insure segregation of aircraft, using instrument approach procedures in instrument conditions, from other aircraft operating under visual weather conditions in controlled airspace.

DATES: Comments must be received on or before February 9, 1987.

ADDRESSES: Send comments on the proposal in triplicate to: Glenn A. Bales, Manager, Airspace and Planning Branch, AEA-530, Federal Aviation Administration, Docket 86-AEA-8, Fitzgerald Federal Building (formerly Federal Building), John F. Kennedy International Airport, Jamaica, New York 11430.

The official dockets may be examined in the Office of Regional Counsel, Federal Aviation Administration, Fitzgerald Federal Building (formerly Federal Building), John F. Kennedy International Airport, Jamaica, New York 11430.

An informal docket may also be examined during normal business hours in the Airspace and Planning Branch, AEA-530, Air Traffic Division, Federal Aviation Administration, Fitzgerald Federal Building, J.F.K. International Airport, Jamaica, New York 11430; Telephone: (718) 917-1228.

FOR FURTHER INFORMATION CONTACT: Glenn A. Bales, Airspace and Planning Branch, AEA-530, Air Traffic Division, Federal Aviation Administration, Fitzgerald Federal Building, J.F.K. International Airport, Jamaica, New York 11430; Telephone: (718) 917-1228.

SUPPLEMENTARY INFORMATION:

Comments Invited

Interested parties are invited to participate in this proposed rulemaking by submitting such written data, views or arguments as they may desire. Comments that provide the factual basis supporting the views and suggestions presented are particularly helpful in developing reasoned regulatory decisions on the proposal. Comments are specifically invited on the overall regulatory, economic, environmental, and energy aspects of the proposal. Communications should identify the airspace docket and be submitted in triplicate to the address listed above. Commenters wishing the FAA to acknowledge receipt of their comments on this notice must submit with those comments a self-addressed, stamped postcard on which the following statement is made: "Comments to Airspace Docket No. 86-AEA-8." The postcard will be date/time stamped and returned to the commenter. All communications received before the specified closing date for comments will be considered before taking action on the proposed rule. The proposal contained in the notice may be changed in the light of comments received. All comments submitted will be available for examination in the Rules Docket both before and after the closing date for comments. A report summarizing each substantive public contact with FAA personnel concerned with this rulemaking will be filed in the docket.

Availability of NPRMs

Any person may obtain a copy of the Notice of Proposed Rulemaking (NPRM) by submitting a request to the Office of Regional Counsel, AEA-7, Federal Aviation Administration, Fitzgerald Federal Building (formerly Federal Building), John F. Kennedy International Airport, Jamaica, New York 11430. Communications must identify the notice number of this NPRM. Persons interested in being placed on a mailing list for future NPRMs should also request a copy of Advisory Circular No. 11-2 which describes the application procedure.

The Proposal

The FAA is considering an amendment to § 71.171 of Part 71 of the Federal Aviation Regulations (14 CFR Part 71) to alter the published description of Patuxent River, MD to reflect minor adjustments to the parameters of the control zone. The intended effect of this action is to insure segregation of aircraft, using instrument approach procedures in instrument conditions, from other aircraft operating under visual weather conditions in controlled airspace. Section 71.171 of Part 71 of the Federal Aviation Regulations was republished in Handbook 7460.6 dated January 2, 1986.

The FAA has determined that this amendment only involves an established body of technical regulations for which frequent and routine amendments are necessary to keep them operationally current. It, therefore: (1) Is not a "major rule" under Executive Order 12291; (2) is not a "significant rule" under DOT Regulatory Policies and Procedures (44 FR 11034; February 26, 1979); and (3) does not warrant preparation of a regulatory evaluation as the anticipated impact is so minimal. Since this is a routine matter that will only affect air traffic procedures and air navigation, it is certified that this rule will not have a significant economic impact on a substantial number of small entities under the criteria of the Regulatory Flexibility Act.

List of Subjects in 14 CFR Part 71

Aviation safety, Control zones.

The Proposed Amendment

PART 71—[AMENDED]

Accordingly, pursuant to the authority delegated to me, the Federal Aviation Administration proposed to amend Part 71 of the Federal Aviation Regulations (14 CFR Part 71) as follows:

1. The authority citation for Part 71 continues to read as follows:

Authority: 49 U.S.C. 1348(a), 1354(a), 1510; Executive Order 10854; 49 U.S.C. 106(g) (Revised Pub. L. 97-449, January 12, 1983); 14 CFR 11.69.

2. Section 71.171 is amended as follows:

Patuxent River, MD [Revised]

Within a 5-mile radius of the center, (Lat. 38°17'15" N., Long. 76°24'30" W.), of Patuxent River, NAS (Trapnell Field) Patuxent River, MD; within 2 miles each side of the Patuxent VORTAC 045° radial, extending from the 5-mile radius zone to 7 miles northeast of the VORTAC; within 2 miles each side of the Patuxent VORTAC 235° radial extending from the 5-mile radius zone to 7.5 miles southwest of the VORTAC; within 2 miles each side of the LF RBN 233° bearing extending from the 5-mile radius zone to 7 miles southwest of the RBN; within 2 miles each side of the Patuxent VORTAC 139° radial, extending from the 5-mile radius zone to 12 miles southeast of the VORTAC; and within a 1/2-mile radius of the center, (Lat. 38°21'40" N., Long. 76°24'15" W.), of Chesapeake Ranch Airpark.

Issued in Jamaica, New York, on December 19, 1986.

Edmund Spring,

Manager, Air Traffic Division.

[FR Doc. 87-235 Filed 1-6-87; 8:45 am]

BILLING CODE 4910-13-M

---

14 CFR Part 71

[Airspace Docket No. 86-AEA-9]

Proposed Alteration of Control Zone, Plattsburgh, NY

AGENCY: Federal Aviation Administration (FAA), DOT.

ACTION: Notice of proposed rulemaking.

SUMMARY: This notice proposes to alter the published description of the Plattsburgh, NY Control Zone. The intended effect of this action is to provide airspace protection for aircraft using a new VOR Runway 19 standard instrument approach procedure in instrument conditions from other aircraft operating under visual weather conditions in controlled airspace.

DATES: Comments must be received on or before February 9, 1987.

ADDRESSES: Send comments on the proposal in triplicate to: Glenn A. Bales, Manager, Airspace and Planning Branch, AEA-530, Federal Aviation Administration, Docket 86-AEA-9, Fitzgerald Federal Building (formerly Federal Building), John F. Kennedy International Airport, Jamaica, New York 11430.

The official dockets may be examined in the Office of Regional Counsel, Federal Aviation Administration, Fitzgerald Federal Building (formerly Federal Building), John F. Kennedy International Airport, Jamaica, New York 11430.

An informal docket may also be examined during normal business hours in the Airspace and Planning Branch, AEA-530, Air Traffic Division, Federal Aviation Administration, Fitzgerald Federal Building, J.F.K. International Airport, Jamaica, New York 11430; Telephone: (718) 917-1228.

FOR FURTHER INFORMATION CONTACT: Glenn A. Bales, Airspace and Planning Branch, AEA-530, Air Traffic Division, Federal Aviation Administration, Fitzgerald Federal Building, J.F.K. International Airport, Jamaica, New York 11430; Telephone: (718) 917-1228.

SUPPLEMENTARY INFORMATION:

Comments Invited

Interested parties are invited to participate in this proposed rulemaking by submitting such written data, views or arguments as they may desire. Comments that provide the factual basis supporting the views and suggestions presented are particularly helpful in developing reasoned regulatory decisions on the proposal. Comments are specifically invited on the overall regulatory, economic, environmental, and energy aspects of the proposal. Communications should identify the airspace docket and be submitted in triplicate to the address listed above. Commenters wishing the FAA to acknowledge receipt of their comments on this notice must submit with those comments a self-addressed, stamped postcard on which the following statement is made: "Comments to Airspace Docket No. 86-AEA-9." The postcard will be date/time stamped and returned to the commenter. All communications received before the specified closing date for comments will be considered before taking action on the proposed rule. The proposal contained in the notice may be changed in the light of comments received. All comments submitted will be available for examination in the Rules Docket both before and after the closing date for comments. A report summarizing each substantive public contact with FAA personnel concerned with this rulemaking will be filed in the docket.

Availability of NPRMs

Any person may obtain a copy of the Notice of Proposed Rulemaking (NPRM) by sumitting a request to the Office of Regional Counsel, AEA-7, Federal Aviation Administration, Fitzgerald Federal Building (formerly Federal Building), John F. Kennedy International Airport, Jamaica, New York 11430. Communications must identify the notice number of this NPRM. Persons interested in being placed on a mailing list for future NPRMs should also request a copy of Advisory Circular No. 11-2 which describes the application procedure.

The Proposal

The FAA is considering an amendment to § 71.171 of Part 71 of the Federal Aviation Regulations (14 CFR Part 71) to alter the published description of the Plattsburgh, NY, Control Zone. The intended effect of this action is to provide airspace protection for aircraft using a new VOR Runway 19 standard instrument approach procedure in instrument conditions from other aircraft operating under visual weather conditions in controlled airspace. Section 71.171 of Part 71 of the Federal Aviation Regulations was republished in Handbook 7460.6 dated January 2, 1986.

The FAA has determined that this amendment only involves an established body of technical regulations for which frequent and routine amendments are necessary to keep them operationally current. It, therefore: (1) Is not a "major rule" under Executive Order 12291; (2) is not a "significant rule" under DOT Regulatory Policies and Procedures (44 FR 11034; February 26, 1979); and (3) does not warrant preparation of a regulatory evaluation as the anticipated impact is so minimal. Since this is a routine matter that will only affect air traffic procedures and air navigation, it is certified that this rule will not have a significant economic impact on a substantial number of small entities under the criteria of the Regulatory Flexibility Act.

List of Subjects in 14 CFR Part 71

Aviation safety, Control zones.

The Proposed Amendment

PART 71—[AMENDED]

Accordingly, pursuant to the authority delegated to me, the Federal Aviation Administration proposes to amend Part 71 of the Federal Aviation Regulations (14 CFR Part 71) as follows:

1. The authority citation for Part 71 continues to read as follows:

Authority: 49 U.S.C. 1348(a), 1354(a), 1510; Executive Order 10854; 49 U.S.C. 106(g) (Revised Pub. L. 97-449, January 12, 1983); 14 CFR 11.69.

2. Section 71.171 is amended as follows:

Plattsburgh, NY [Amended]

By inserting the words "within 3 miles each side of the Plattsburgh, NY, VORTAC 350°T (005°M) radial, extending from the 5-mile radius to 8 miles north of the VORTAC;" after the words "of Clinton County Airport;".

Issued in Jamaica, New York, on December 19, 1986.

Edmund Spring,

Manager, Air Traffic Division.

[FR Doc. 87-236 Filed 1-6-87; 8:45 am]

BILLING CODE 4910-13-M

DEPARTMENT OF THE INTERIOR

Office of Surface Mining Reclamation and Enforcement

30 CFR Part 935

Public Comment Procedures and Opportunity for Public Hearing on Proposed Modifications to the Ohio Permanent Regulatory Program Under the Surface Mining Control and Reclamation Act of 1977

AGENCY: Office of Surface Mining Reclamation and Enforcement (OSMRE), Interior.

ACTION: Proposed rule.

SUMMARY: OSMRE is announcing procedures for a public comment period and for requesting a public hearing on the substantive adequacy of a program amendment submitted by Ohio as an amendment to the State's permanent regulatory program (hereinafter referred to as the Ohio program) under the Surface Mining Control and Reclamation Act of 1977 (SMCRA).

The amendment submitted consists of a proposed change to Ohio bonding rules [O.A.C.1501:13-7-03]. The amendment is proposed to extend the period of time a coal mine permittee would have to replace the bond of a surety who has become incapacitated by reason of bankruptcy, insolvency, or suspension or revocation of the surety's license from sixty to ninety days.

This notice sets forth the times and locations that the Ohio program and proposed amendment will be available for public inspection, the comment period during which interested persons may submit written comments on the proposed amendment, and the procedures that will be followed for the public hearing.

DATES: Written comments from the public not received by 4:30 p.m., February 6, 1987 will not necessarily be considered in the decision on whether the proposed amendment should be approved and incorporated into the Ohio regulatory program. If requested, a public hearing on the proposed amendment will be scheduled for January 27, 1987. Any person interested on speaking at the hearing should contact Ms. Nina Rose Hatfield at the address or telephone number listed below by January 22, 1987. If no person has contacted Ms. Hatfield by that date to express an interest in the hearing, the hearing will be cancelled. If only one person requests an opportunity to speak at the public hearing, a public meeting, rather than a hearing, may be held and the results of the meeting included in the Administrative Record.

ADDRESSES: The public hearing if requested, is scheduled for 1:00 p.m. in Room 202, Columbus Field Office, 2242 South Hamilton Road, Columbus, Ohio 43227.

Written comments and requests for an opportunity to speak at the hearing should be directed to Ms. Nina Rose Hatfield, Field Office Director, Columbus Field Office, Office of Surface Mining Reclamation and Enforcement, Room 202, 2242 South Hamilton Road, Columbus Ohio 43227; Telephone: (614) 866-0578.

Copies of the Ohio program, the proposed modification to the program, a lisiting of any scheduled public meetings, and all written comments received in response to this notice will be available for public review at the OSMRE Field Office listed above and at the OSMRE Headquarters Office and the office of State regulatory authority listed below, during normal business hours Monday through Friday, excluding holidays.

Office of Surface Mining Reclamation and Enforcement, Room 5315A, 1100 "L" Street, NW., Washington, DC 20240

Ohio Division of Reclamation, Building B, Fountain Square, Columbus, Ohio 43224.

FOR FURTHER INFORMATION CONTACT: Nina Rose Hatfield, Director, Columbus Field Office, Office of Surface Mining Reclamation and Enforcement, Room 202, 2242 South Hamilton Road, Columbus, Ohio 43227; Telephone: (614) 866-0578.

SUPPLEMENTARY INFORMATION:

I. Background on the Ohio Program

The Ohio program was approved effective August 16, 1982, by notice published in the August 10, 1982 **Federal Register** (47 FR 34688). Information pertinent to the general background, revisions, modifications, and amendments to the Ohio program submission, as well as the Secretary's findings, the disposition of comments, and a detailed explanation of the conditions of approval of the Ohio program can be found in the August 10, 1982 **Federal Register.** Subsequent actions concerning the conditions of approval and program amendments are identified at 30 CFR 935.11 and 935.15.

II. Submission of Revisions

By letter dated December 1, 1986, the Ohio Department of Natural Resources, Division of Reclamation submitted a proposed amendment to Ohio's regulatory program at 1501:13-7-03. The proposed change to OAC section 1501:13-7-03 would extend from sixty to ninety days the period of time a coal mine permittee has to replace the performance bond of a surety that has become incapacitated due to bankruptcy, insolvency, or suspension or revocation of the surety's license.

The full text of the proposed program amendment submitted by Ohio is available for public inspection at the addresses listed above. Upon request to OSMRE's Field Office Director, each person may receive, free of charge, one single copy of the proposed amendment. The Director now seeks public comment on whether the proposed amendment is no less effective than the Federal regulations. If approved, the amendment will become part of the Ohio program.

III. Procedural Matters

1. *Compliance with the National Environmental Policy Act:* The Secretary has determined that, pursuant to section 702(d) of SMCRA, 30 U.S.C., 1292(d), no environmental impact statement need be prepared on this rulemaking.

2. *Executive Order No. 12291 and the Regulatory Flexibility Act:* On August 28, 1981, the Office of Management and Budget (OMB) granted OSMRE an exemption from sections 3, 4, 7 and 8 of Executive Order 12291 for actions directly related to approval or conditional approval of State regulatory programs. Therefore, this action is exempt from preparation of a Regulatory Impact Analysis and regulatory review by OMB.

The Department of the Interior has determined that this rule would not have a significant economic effect on a substantial number of small entities under the Regulatory Flexibility Act (5 U.S.C. 601 *et seq.*). This rule would not impose any new requirements; rather, it would ensure that existing requirements established by SMCRA and the Federal rules would be met by the State.

3. *Paperwork Reduction Act:* This rule does not contain information collection requirements which require approval by the Office of Management and Budget under 44 U.S.C. 3507.

List of Subjects in 30 CFR Part 935

Coal mining, Intergovernmental relations, Surface mining, Underground mining.

Dated: December 29, 1986.

Carl C. Close,

Acting Deputy Director, Operations and Technical Services, Office of Surface Mining Reclamation and Enforcement.

[FR Doc. 87-205 Filed 1-6-87; 8:45 am]

BILLING CODE 4310-05-M

ENVIRONMENTAL PROTECTION AGENCY

40 CFR Part 65

[A-7-FRL-3139-5]

State and Federal Administrative Orders Permitting a Delay in Compliance With State Implementation Plan Requirements; Proposed Approval of an Administrative Order Issued by the Missouri Air Conservation Commission to the American Can Co., St. Louis, MO

AGENCY: Environmental Protection Agency (EPA).

ACTION: Proposed rule.

SUMMARY: EPA proposes to approve an Administrative Order issued by Missouri Air Conservation Commission to the American Can Company. The Order requires the company to bring air emissions from its three-piece can coating and end seal operations in St. Louis, Missouri, into compliance with certain regulations contained in the federally approved Missouri State Implementation Plan (SIP). Because the company is unable to comply with these regulations at this time, the Order establishes an expeditious schedule requiring final compliance by November 11, 1987. If it is approved, source compliance with the Order would preclude suits under the federal enforcement and citizen suit provisions of the Clean Air Act (the Act) for violation of the SIP regulations covered by the Order. The purpose of this notice is to invite public comment on EPA's proposed approval of the Order as a delayed compliance order. The Order was submitted to the EPA for approval by letter of September 8, 1986, from the state of Missouri.

EFFECTIVE DATE: Written comments must be received on or before February 6, 1987.

ADDRESSES: Comments should be submitted to Director, Air and Toxics Division, EPA, Region VII, 726 Minnesota Avenue, Kansas City, Kansas 66101. Material supporting the Order and public comments received in response to this notice may be inspected and copied (for appropriate charges) at this address during normal business hours.

FOR FURTHER INFORMATION CONTACT: Anthony P. Wayne at 913-236-2896 (FTS 757-2896) or Anne W. Rowland at 913-236-2853 (FTS 757-2853), EPA, Region VII, 726 Minnesota Avenue, Kansas City, Kansas 66101.

SUPPLEMENTARY INFORMATION: American Can Company operates a three-piece can manufacturing plant at St. Louis, Missouri. On December 31, 1985, the company applied to the Board of Air Pollution Appeals and Variance Review, city of St. Louis, for a variance from those portions of Section 26, St. Louis City Ordinance 59270 which became effective on that date and under the Certificate of Authority issued by the Missouri Air Conservation Commission to the city of St. Louis to the identical requirements of Missouri Regulation 10 CSR 10-5.330(1)(B) and (C) which had been previously approved as part of the Missouri SIP by the EPA as they pertain to the emissions of volatile organic compounds (VOC).

A public hearing on the variance request was held in St. Louis on February 13, 1986, by the Board of Air Pollution Appeals and Variance Review. At that time, oral and written testimony was submitted by the company and others. The variance was granted on April 16, 1986.

On August 21, 1986, the Missouri Air Conservation Committee authorized submission of the variance to EPA for approval as a delayed compliance order, and the Order was subsequently submitted to EPA on September 8, 1986.

Because the Order was issued to a major source of VOC in a designated nonattainment area for ozone, and permits a delay in compliance with the applicable regulation, it must be approved by the EPA before it becomes effective as a delayed compliance order under section 113(d) of the Act. EPA may approve the Order if it satisfies the appropriate requirements of this subsection.

If the Order is approved by EPA, source compliance with its terms would preclude federal enforcement action under section 113 of the Act against the source for violations of the regulation covered by the Order during the period the Order is in effect. Enforcement against the source under the citizen suit provisions of the Act (section 304) would be similarly precluded. If approved, the Order would also constitute an addition to the Missouri SIP.

Comments received by the date specified above will be considered in determining whether EPA should issue the Order. Testimony given at any public hearing concerning the Order will also be considered. After the public comment period the Administrator of EPA will publish in the **Federal Register** the EPA's final action on the Order in 40 CFR Part 65.

The Order submitted addresses emissions from the sheet basecoat, varnish, and end seam compound operations at the American Can Company facility, which are subject to Missouri Regulation Title 10 CSR 10-5.330, Control of Emissions from Industrial Surface Coating Operations. This regulation limits the emissions of VOC, and is part of the federally approved Missouri SIP. The Order requires that American Can Company be in final compliance with the regulation by December 31, 1986, through the installation of low solvent complying coatings, or by November 15, 1987, through the installation of air pollution control equipment which will reduce VOC emissions to levels equivalent, on a solids applied basis, to emission levels utilizing reasonable available control technology coatings. The source has consented to this Order.

The compliance schedule incorporated in the Order contains interim compliance dates for the introduction of low solvent coatings and for the installation of control equipment if the low solvent coatings cannot achieve compliance by December 31, 1986. The schedule for introduction of substitute coatings and installation of the control equipment are as follows:

Compliance date	Increment of progress
Sept. 30, 1986	Reduce current emissions to a level 25 percent or less over allowable.
Dec. 31, 1986	Demonstrate final compliance with low solvent coatings.
Mar. 15, 1987	Submit plans and receive permits to construct control equipment.
Sept. 15, 1987	Complete installation of control equipment.
Oct. 15, 1987	Conduct control equipment and source compliance testing.
Nov. 15, 1987	Demonstrate and maintain final compliance with the SIP.

American Can Company has consented to the increments of progress and agreed to meet the increments during the period of this informal rulemaking. American Can Company is further required to submit reports (two total) indicating the company's compliance with introduction of the low solvent coatings.

The EPA also intends this notice to give the American Can Company formal notice that failure to comply with any of the increments of progress toward compliance will subject the source to federal enforcement pursuant to section 113 of the Act. In addition, in the event final compliance is not achieved by

December 31, 1986, source compliance with the Order will not preclude assessment of noncompliance penalties under section 120 of the Act, unless the source is otherwise entitled to an exemption under section 120(a)(2)(B) or (C).

For the above reasons, EPA believes the Order meets the requirements of section 113(d)(1) and proposes to approve it as a Delayed Compliance Order.

Morris Kay,

Regional Administrator.

In consideration of the following, it is proposed to amend 40 CFR Chapter 1, as follows:

PART 65—DELAYED COMPLIANCE ORDERS

1. The authority for Part 65 continues to read as follows:

Authority: 42 U.S.C. 7413, 7601.

2. Section 65.301 is amended by adding the following entry to the Table to read as follows:

§ 65.301 EPA approval of State delayed compliance orders issued to major stationary sources.

* * * * *

Source	Location	Order No.	SIP regulations involved	Date of FR promulgation	Final compliance date
American Can Company.	St. Louis Missouri	DCO-VII-026	10 CSR 10-5.330	(reserved)	12/31/86 11/15/87

[FR Doc. 87-240 Filed 1-6-87; 8:45 am]

BILLING CODE 6560-50-M

40 CFR Part 180

[OPP-300157; FRL-3139-1]

Ammonium Nitrate and Urea; Tolerance Exemptions

AGENCY: Environmental Protection Agency (EPA).

ACTION: Proposed rule.

SUMMARY: This document proposes that ammonium nitrate and urea be exempted from the requirement of a tolerance when used as inert ingredients (adjuvant/intensifier for herbicides) in pesticide formulations applied to growing crops only. This proposed regulation was requested by BASF Corp.

DATE: Written comments, identified by the document control number [OPP-300157], must be received on or before February 6, 1987.

ADDRESS:

By mail, submit comments to: Program Management and Support Division (TS-757C), Office of Pesticide Programs, Environmental Protection Agency, 401 M St., SW., Washington, DC 20460.

In person, deliver comments to: Registration Support and Emergency Response Branch, Registration Division (TS-767C), Environmental Protection Agency, Rm. 716, CM #2, 1921 Jefferson Davis Highway, Arlington, VA 22202.

Information submitted as a comment concerning this document may be claimed confidential by marking any part or all of that information as "Confidential Business Information" (CBI). Information so marked will not be disclosed except in accordance with procedures set forth in 40 CFR Part 2. A copy of the comment that does not contain CBI must be submitted for inclusion in the public record. Information not marked confidential may be disclosed publicly by EPA without prior notice to the submitter. All written comments will be available for public inspection in Rm. 236 at the address given above from 8 a.m. to 4 p.m., Monday through Friday, excluding legal holidays.

FOR FURTHER INFORMATION CONTACT:

By mail: Diane Ierley, Registration Support and Emergency Response Branch, Environmental Protection Agency, 401 M St., SW., Washington, DC 20460.

Office location and telephone number: Registration Support and Emergency Response Branch, Rm. 716, CM #2, 1921 Jefferson Davis Highway, Arlington, VA 22202, (703) 557-7700.

SUPPLEMENTARY INFORMATION: At the request of BASF Corp., the Administrator proposes to amend 40 CFR 180.1001(d) by establishing an exemption from the requirement of a tolerance for ammonium nitrate and urea when used as an adjuvant/intensifier for herbicides in pesticide formulations applied to growing crops only.

Inert ingredients are all ingredients that are not active ingredients as defined in 40 CFR 162.3(c), and include, but are not limited to, the following types of ingredients (except when they have a pesticidal efficacy of their own): Solvents such as alcohols and hydrocarbons; surfactants such as polyoxyethylene polymers and fatty acids; carriers such as clay and diatomaceous earth; thickeners such as carrageenan and modified cellulose; wetting and spreading agents; and propellants in aerosol dispensers and emulsifiers. The term "inert" is not intended to imply nontoxicity; the ingredient may or may not be chemically active.

Preambles to proposed rulemaking documents of this nature include the common or chemical name of the substance under consideration, the name and address of the firm making the request for the exemption, and toxicological and other scientific bases used in arriving at a conclusion of safety in support of the exemption.

Name of inert ingredients. Ammonium nitrate and urea.

Name and address of requestor. BASF Corp., Parsippany, NJ 07054.

Bases for approval of ammonium nitrate and urea. 1. Ammonium nitrate is cleared under 21 CFR 176.180 as a component of paper and paperboard in contact with dry food.

2. Ammonium nitrate is exempted under 40 CFR 180.1018 from the requirement of a tolerance when used as a desiccant or defoliant in the production of cottonseed, grain sorghum, peppers, potatoes, and sweet potatoes.

3. Urea is cleared under 21 CFR 184.1923 as a direct food substance affirmed as generally recognized as safe (GRAS).

4. Urea is cleared under 40 CFR 180.1001(c) for use as a stabilizer, inhibitor in pesticide formulations applied to growing crops, or to raw agricultural commodities after harvest.

EPA has initiated new review procedures for tolerance exemptions for inert ingredients. Under these procedures the Agency conducts a review of the data base supporting any prior clearances, the data available in the scientific literature, and any other relevant data. Based on a review of such data, the Agency has determined that no additional test data will be required to support these regulations.

Based on the above information and review of its use, it has been found that when used in accordance with good agricultural practices these ingredients are useful and do not pose a hazard to humans or the environment. In conclusion, the Agency has determined that the proposed amendments to 40 CFR Part 180 will protect the public health. It is therefore proposed that the

regulations be established as set forth below.

Any person who has registered or submitted an application for registration of a pesticide under the Federal Insecticide, Fungicide, and Rodenticide Act (FIFRA), as amended, that contains either of these inert ingredients may request within 30 days after publication of this document in the **Federal Register** that this rulemaking proposal be referred to an Advisory Committee in accordance with section 408(e) of the Federal Food, Drug, and Cosmetic Act.

Interested persons are invited to submit written comments on the proposed regulation. Comments must bear a notation indicating both the subject and the petition and document control number [OPP-300157]. All written comments filed in response to this proposal will be available for inspection in the Registration Support and Emergency Response Branch at the address given above from 8 a.m. to 4 p.m., Monday through Friday, except legal holidays.

The Office of Management and Budget has exempted this rule from the requirements of section 3 of Executive Order 12291.

Pursuant to the requirements of the Regulatory Flexibility Act (Pub. L. 96-354, 94 Stat. 1164, 5 U.S.C. 601-612), the Administrator has determined that regulations establishing new tolerances or raising tolerance levels or establishing exemptions from tolerance requirements do not have a significant economic impact on a substantial number of small entities. A certification statement to this effect was published in the **Federal Register** of May 4, 1981 (46 FR 24950).

List of Subjects in 40 CFR Part 180

Administrative practice and procedure, Agricultural commodities, Pesticides and pests.

Dated: December 23, 1986.

Edwin F. Tinsworth,

Director, Registration Division.

PART 180—[AMENDED]

Therefore, it is proposed that Part 180 be amended as follows:

1. The authority citation for Part 180 continues to read as follows:

Authority: 21 U.S.C. 346a.

2. Section 180.1001(d) is amended by adding and alphabetically inserting the inert ingredients as follows:

§ 180.1001 Exemptions from the requirement of a tolerance.

* * * * *

(d) * * *

Inert ingredients	Limits	Uses
*	*	*
Ammonium nitrate (CAS Reg. No. 6484-52-2)	.....	Adjuvant/intensifier for herbicides.
*	*	*
Urea (CAS Reg. No. 57-13-6)	.....	Adjuvant/intensifier for herbicides.
*	*	*

[FR Doc. 87-136 Filed 1-6-87; 8:45 am]

BILLING CODE 6560-50-M

INTERSTATE COMMERCE COMMISSION

49 CFR Part 1312

[Ex Parte No. 346 (Sub-No. 22)]

Short Notice Effectiveness for Independently Filed Rail Carrier Rates

AGENCY: Interstate Commerce Commission.

ACTION: Notice of proposed rulemaking.

SUMMARY: In a separate decision in this docket, the Commission has decided to reduce the notice period required for independently filed new and reduced rail carrier rates to 1 day. There, the Commission also decided that a republication of a rate cancelled in the erroneous belief it is obsolete constitutes a new or reduced rate that may become effective on 1-day's notice. Accordingly, the Commission seeks comments on whether to retain the provision at 49 CFR 1312.17(e), which provides that rates cancelled in the erroneous belief they are obsolete may be republished on 5-days' notice. An amendment to 49 CFR 1312.39(h)(6) addressing mixed tariff filings on both 20- and 1-day notice is also proposed.

DATES: Comments are due January 26, 1987.

Comments: Send an original and 10 copies of comments referring to Ex Parte No. 346 (Sub-No. 22) to: Office of the Secretary, Case Control Branch, Interstate Commerce Commission, Washington, DC 20423.

FOR FURTHER INFORMATION CONTACT: Joseph H. Dettmar, (202) 275-7245.

SUPPLEMENTARY INFORMATION: Additional information is contained in the Commission's decision. To purchase a copy of the full decision, write to T.S. InfoSystems, Inc., Room 2229, Interstate Commerce Commission Building, Washington, DC 20423, or call 289-4357 (DC Metropolitan area) or toll free (800) 424-5403.

This action will not significantly affect either the quality of the human environment or energy conservation.

The Commission certifies that the proposed rule changes, if adopted, will not have a significant economic impact on a substantial number of small entities, because they would merely eliminate a rule rendered moot by a final rule adopted in this proceeding and clarify another rule.

List of Subjects in 49 CFR Part 1312

Railroads, Freight tariffs.

Dated: December 19, 1986.

By the Commission, Chairman Gradison, Vice Chairman Simmons, Commissioners Sterrett, Andre, and Lamboley.

Noreta R. McGee,

Secretary.

Appendix

Chapter X of the Title 49 of the Code of Federal Regulations is proposed to be amended as follows:

PART 1312—REGULATIONS FOR THE PUBLICATION, POSTING AND FILING OF TARIFFS, SCHEDULES AND RELATED DOCUMENTS

1. The authority citation for 49 CFR Part 1312 continues to read as follows:

Authority: 49 U.S.C. 10708(d)(1) and (2) and 10762, 5 U.S.C. 553.

§ 1312.17 [Amended]

2. The second sentence in 49 CFR 1312.17(e), "Rates cancelled on the erroneous belief they were obsolete may be republished on 5 days' notice" is proposed to be removed.

3. The text of § 1312.39(h)(6) is proposed to be revised to read as follows:

§ 1312.39 Miscellaneous provisions which may be filed on less than statutory notice.

* * * * *

(h) * * *

(6) *Mixed filings.* Tariffs or amendments that contain new or reduced rates in addition to rate increases shall be filed with the notice applicable for rate increases, with the new and reduced rate filings appropriately symbolized and excepted from the notice applicable for rate increases.

[FR Doc. 87-247 Filed 1-6-87; 8:45 am]

BILLING CODE 7035-01-M

Notices

Federal Register
Vol. 52, No. 4
Wednesday, January 7, 1987

This section of the FEDERAL REGISTER contains documents other than rules or proposed rules that are applicable to the public. Notices of hearings and investigations, committee meetings, agency decisions and rulings, delegations of authority, filing of petitions and applications and agency statements of organization and functions are examples of documents appearing in this section.

DEPARTMENT OF COMMERCE

International Trade Administration

[Docket No. 6677-01]

Actions Affecting Export Privileges of Respondent Pierre Andre Randin; Decision and Order

Procedural Background

On April 2, 1986, the Office of Export Enforcement, International Trade Administration, U.S. Department of Commerce (the Department), issued a charging letter against Respondent Pierre Andre Randin. This letter was issued under the authority of section 13(c) of the Export Administration Act of 1979 (50 U.S.C. app. sections 2401–20 (1982), as amended by the Export Administration Amendments Act of 1985, Pub. L. 99–64, 99 Stat. 120 (July 12, 1985)) (the Act), and Part 388 of the Export Administration Regulations (currently codified at 15 CFR Parts 368 through 399 (1986) (the Regulations). The letter charged that Respondent had violated §§ 387.3, 387.4, 387.5, and 387.6 of the Regulations in 1981–82 in connection with six transactions for the purchase in the United States of U.S.-origin goods allegedly for export to Switzerland, in connection with an official investigation of one of such transactions, and in connection with a transaction for the purchase of three U.S.-origin computers from the Swiss distributor for the U.S. computer manufacturer.

Following an exchange of correspondence between Respondent and this Office, an Order to Show Cause to Respondent was issued on September 3, 1986 directing him to show cause by September 15, 1986 why he should not be held in default for failure to file timely and answer to the charging letter. Respondent did not reply to this Order to Show Cause. Consequently, on September 25, 1986, an Order was entered holding Respondent in default and providing Departmental Counsel until October 10, 1986 to make a submission for the record. Departmental Counsel made its submission by that date, including therein evidence in support of the allegations made in the charging letter. Departmental Counsel then supplemented that submission, upon the request of this Office, with an oral presentation on the record November 6, 1986.

The instant Decision and Order, if and when the Order becomes effective, will resolve the proceeding initiated by the charging letter of April 2, 1986. An order resolving this proceeding will also conclude the proceeding initiated against Respondent by the Order of March 11, 1983 (48 FR 11479, March 18, 1983). By the Order of March 11, 1983, Respondent, together with several other parties named as respondents and one person named as a related person therein, was temporarily denied all privileges of participating in any manner of capacity in the export of U.S.-origin commodities or technical data. This Order of March 11, 1983 was to remain in effect until the final disposition of any administrative or judicial proceedings initiated against the respondents named therein as a result of the then ongoing investigation. The instant proceeding was initiated against Respondent by the Department as a result of such investigation. Accordingly, an order resolving the instant proceeding, when it becomes effective, will also conclude as to Respondent the effectiveness of the Order of March 11, 1983.

Findings

The record of this proceeding warrants the following findings. For a period beginning in about April 1981 and continuing at least into November 1982, Respondent conspired and acted in concert with Joseph Lousky, another of the respondents named in the Order of March 11, 1983, to bring about acts that constituted violations of the Act and the Regulations. The purpose of this conspiracy was to acquire U.S.-origin goods on the representation that Switzerland was their intended ultimate destination when, in fact, Respondent and Lousky intended to, and did subsequently, divert these goods to proscribed destinations without the required reexport authorization from the Department. In accomplishing this conspiracy, Respondent caused false and misleading statements of material facts to be submitted to the Department.

To implement the conspiracy, Respondent was involved in six separate transactions for the purchase in the United States of U.S.-origin goods, allegedly for export to Switzerland. Each of these transactions is identified more fully in Schedule A to the charging letter of April 2, 1986, which is incorporated herein by this reference. In connection with each transaction, Respondent caused false and misleading statements of material fact to be contained in export control documents that were submitted to the Department.

Specifically, Respondent, acting in concert with Lousky, represented in the purchase transactions that the goods described in the export control documents were being obtained for end-use in Switzerland by the Swiss company then employing Respondent. This company was Favag, S.A., which was named as one of the respondents in the Order of March 11, 1983, and was subsequently deleted from the respondents named therein by the Order of May 8, 1984 (49 FR 20357, May 14, 1984). Respondent's representations regarding the end use of the goods in these six purchase transactions were made without the knowledge or consent of Favag, S.A. (Favag, S.A. has since discharged Respondent). Respondent knew at the time the representations were being made and the documents submitted to the Department that the goods were actually being purchased by him on behalf of Favag, S.A. for resale within Switzerland to Lousky's Swiss company, Eler Engineering S.A. Eler Engineering S.A. was another of the respondents named in the Order of March 11, 1983. Respondent also knew that, once these U.S.-origin goods were resold to Eler Engineering S.A., it would then, and in five of the six transactions did in fact, reexport them to proscribed destinations without the required reexport authorization from the Department.

In addition, or August 18 and on August 20, 1982, in the course of an official investigation by the Department's Office of Export Enforcement, Respondent made false and misleading statements concerning material facts. Such statements were made, to officials of the U.S. Embassy in Switzerland and of the Departments' Office of Export Enforcement, to effect an export from the United States by misrepresenting the intended end-use of

one of the six shipments identified in Schedule A of the charging letter.

Further, from on or about June 16, 1981 and continuing into December 1981, Respondent and Lousky were involved in a transaction wherein Favag, S.A., in accordance with an order placed by Eler Engineering S.A., purchased three U.S.-origin computers from the Swiss distributor for the U.S. computer manufacturer. Favag, S.A. resold the U.S.-origin computers to Eler Engineering S.A., allegedly for use within Switzerland. In fact, as Respondent and Lousky knew, the three U.S.-origin computers were intended to be, and actually were, reexported by Eler Engineering S.A. to a proscribed destination without the required reexport authorization from the Department.

Related Persons

The record also contains evidence that Respondent has a connection with certain business organizations not elsewhere mentioned in the instant Decision and Order, and Departmental Counsel proposed that these organizations be named as related persons herein. Section 388.3(c) of the Regulations provides that an order may be made applicable to a related person "after notice and opportunity for comment. . . ." Departmental Counsel may initiate a proceeding, under § 388.3(c), affording notice and opportunity for comment to these business organizations. Following such a proceeding, if the record so indicates, these organizations will then be named as related persons.

Conclusion as to Respondent

The record requires the conclusion that Respondent committed one violation of § 387.3 of the Regulations, six violations each of §§ 387.4 and 387.6 of the Regulations, and eight violations of § 387.5 of the Regulations, for a total of 21 violations of the Regulations. All of these violations involved U.S.-origin commodities controlled under section 5 of the Act for national security reasons, as alleged in the charging letter. For such violations, an Order denying Respondent's U.S. export privileges permanently from the date a final order becomes effective in this proceeding is appropriate.

Accordingly, pursuant to the authority delegated to the undersigned by Part 388 of the Regulations, it is hereby ordered:

1. All outstanding validated export licenses in which Respondent appears or participates, in any manner or capacity, are hereby revoked and shall be returned forthwith to the Department's Office of Export Licensing for cancellation.

2. Respondent: Pierre Andre Randin, 2, Madison de la Dime, 1436 Treycovagnes, Switzerland, is denied, permanently from the date that this Order becomes effective, all privileges of participating, directly or indirectly, in any manner or capacity, in any transaction involving the export of U.S.-origin commodities or technical data from the United States or abroad.

A. Without limiting the generality of the foregoing, participation prohibited in any such transaction, either in the United States or abroad, shall include, but not be limited to, participation: (i) As a party or as a representative of a party to any export license application submitted to the Department; (ii) in preparing or filing with the Department any export license application or request for reexport authorization, or any document to be submitted therewith; (iii) in obtaining from the Department or using any validated or general export license or other export control document; (iv) in carrying on negotiations with respect to, or in receiving, ordering, buying, selling, delivering, storing, using, or disposing of any commodities or technical data, in whole or in part, exported or to be exported from the United States and subject to the Regulations; and (v) in the financing, forwarding, transporting, or other servicing of such commodities or technical data. Such denial of export privileges shall extend only to those commodities and technical data that are subject to the Act and the Regulations.

B. Such denial of export privileges shall extend not only to Respondent but also to his agents, employees, and successors. After notice and opportunity for comment, such denial may also be made applicable to any person, firm, corporation, or business organization with which Respondent is now or hereafter may be related by affiliation, ownership, control, position of responsibility, or other connection in the conduct of export trade or related services.

C. No person, firm, corporation, partnership, or other business organization, whether in the United States or elsewhere, without prior disclosure to and specific authorization from the Department's Office of Export Licensing, shall, with respect to U.S.-origin commodities and technical data that are subject to the denial of export privileges set out herein, do any of the following acts, directly or indirectly, or carry on negotiations with respect thereto, in any manner or capacity, on behalf of or in any association with Respondent or any related person, or whereby Respondent or any related person may obtain any benefit therefrom or have any interest in or participation therein, directly or indirectly: (i) Apply for, obtain, transfer, or use any license, Shipper's Export Declaration, bill of lading, or other export control document relating to any export, reexport, transshipment, or diversion of any commodity or technical data exported in whole or in part, or to be exported by, to, or for Respondent or any related person denied export privileges; or (ii) order, buy, receive, use, sell, deliver, store, dispose, foward, transport, finance, or otherwise service or participate in any export, reexport, transshipment, or diversion of any commodity or technical data exported or to be exported from the United States.

3. By Order of March 11, 1983, Respondent, together with several other parties named as respondents and one person named as a related person therein, was temporarily denied all privileges of participating in any manner or capacity in the export of U.S.-origin commodities or technical data. Upon the effective date of the final order in this proceeding, the Order of March 11, 1983 shall be amended by deleting from the list of respondents named therein: Pierre Andre Randin, Monruz 34, CH-2000 Neuchatel 8, Switzerland.

4. In accordance with section 13(c) of the Act and § 388.16 of the Regulations, the foregoing constitutes the Decision and Order of the undersigned in this proceeding. The Order shall become effective if and when it is affirmed by the Secretary pursuant to section 13(c).

Dated: December 4, 1986.

Thomas W. Hoya,

Administrative Law Judge.

Note.—Having reviewed the record and based on the facts addressed in this case, I affirm the above Decision and Order of the Administrative Law Judge. This constitutes final agency action in this matter.

Dated: December 30, 1986.

Paul Freedenbergt,

Assistant Secretary for Trade Administration.

[FR Doc. 87-208 Filed 1-6-87; 8:45 am]

BILLING CODE 3510-DT-M

Subcommittee on Export Administration of the President's Export Council; Notice of Partially Closed Meeting

A partially closed meeting of the President's Export Council Subcommittee on Export Administration will be held January 28, 1987, 9 a.m. to 3 p.m., Department of Commerce, Herbert Hoover Building, Room 3407, 14th and

Constitution Avenue NW., Washington, DC.

The Subcommittee provides advice on matters pertinent to those portions of the Export Administration Act as amended that deal with United States has diplomatic or trading relations, and of controlling trade for national security and foreign policy reasons.

General Session

9:00 a.m.–12:00 noon. Status reports by Ad Hoc Chairmen and various developments at Commerce in the International Trade area.

Executive Session

1:30 p.m.–3:00 p.m. Discussion of matters properly classified under Executive Order 12356 dealing with matters pertaining to the control of exports for national security, foreign policy or short supply reasons under the Export Administration Act of 1979, as amended in 1985. A Notice of Determination to close meetings or portions of meetings of the subcommittee to the public on the basis of 5 U.S.C. 522b(c)(1) was approved October 17, 1985 in accordance with the Federal Advisory Committee Act. A copy of the Notice is available for public inspection and copying in the Central Reference and Records Inspection Facility, Room 6628, U.S. Department of Commerce, (202) 377–4217.

For further information and copies of the minutes, contact Connie White (202) 377–4275.

Daniel E. Cook,

Acting Director, Strategic Planning and Policy Division, Export Administration.

[FR Doc. 87–207 Filed 1–6–87; 8:45 am]

BILLING CODE 3510-DT-M

National Oceanic and Atmospheric Administration

National Marine Fisheries Service; Receipt of Application for a General Permit to Incidentally Take Marine Mammals

Notice is hereby given that the following application has been received to take marine mammals incidental to the pursuit of commercial fishing operations within the U.S. exclusive economic zone during 1987 as authorized by the Marine Mammal Protection Act of 1972 (16 U.S.C. 1361–1407) and the regulations thereunder.

Federpesca (Federaziones Nacionale delle di Pesca), Corso D'Italia 92, 00198 Rome Italy has applied for a Category 1: "Towed or Dragged Gear" general permit to take up to 40 small cetaceans and 20 pinnipeds in the North Atlantic Ocean.

Under a general permit held by Federpesca during 1986, 46 cetaceans were observed taken in the course of fishing operations.

The application is available for review in the Office of the Assistant Administrator for Fisheries, National Marine Fisheries Service, 1825 Connecticut Avenue NW., Room 805, Washington, DC.

Dated: January 2, 1987.

Richard B. Roe,

Director, Office of Fisheries Management, National Marine Fisheries Service.

[FR Doc. 87–285 Filed 1–6–87; 8:45 am]

BILLING CODE 3510-22-M

[P234A]

Marine Mammals; Issuance of Permit; Mr. Lloyd A. Borguss

On April 15, 1986, notice was published in the **Federal Register** (51 FR 12724) that an application had been filed by Mr. Lloyd A. Borguss, Dolphins Plus, Inc., 147 Corrine Place, P.O. Box 2114, Key Largo, Florida 33037, to permanently remove from the wild six (6) Atlantic bottlenose dolphins (*Tursiops truncatus*) for public display.

Notice is hereby given that on December 29, 1986, as authorized by the provisions of the Marine Mammal Protection Act of 1972 (16 U.S.C. 1361–1407), the National Marine Fisheries Service issued a Permit for the above taking subject to certain conditions set forth therein.

The Permit is available for review by interested persons in the following offices:

Office of Protected Species and Habitat Conservation, National Marine Fisheries Service, 1825 Connecticut Avenue, NW., Room 805, Washington, DC; and

Director, Southeast Region, National Marine Fisheries Service, 9450 Koger Boulevard, St. Petersburg, Florida 33702.

Dated: January 2, 1987.

Richard B. Roe,

Director, Office of Fisheries Management, National Marine Fisheries Service.

[FR Doc. 87–286 Filed 1–6–87; 8:45 am]

BILLING CODE 3510-22-M

[Modification No. 1 to Permit No. 371]

Marine Mammals; Modification of Permit; Randall Wells

Notice is hereby given that pursuant to the provisions of § 216.33 (d) and (e) of the Regulations Governing the Taking and Importing of Marine Mammals (50 CFR Part 216), Permit No. 371 issued to Dr. Randall A. Wells and Mr. Michael D. Scott, c/o Long Marine Laboratory, University of California, Santa Cruz, California 95064, on March 5, 1982 (47 FR 10893) is modified as follows:

Section B.5 replaced by:

5. This Permit is valid with respect to the taking authorized herein until December 31, 1987.

This modification became effective December 31, 1986.

The Permit, as modified, and documentation pertaining to the modification are available for review in the following offices:

Assistant Administrator for Fisheries, 1825 Connecticut Avenue, NW., Washington, DC.

Director, National Marine Fisheries Service, Southeast Region, 9450 Koger Boulevard, St. Petersburg, Florida 33702 and,

Director, National Marine Fisheries Service, Southwest Region, 300 South Ferry Street, Terminal Island, California 90731–7415.

Dated: January 2, 1987.

Richard B. Roe,

Director, Office of Fisheries Management, National Marine Fisheries Service.

[FR Doc. 87–287 Filed 1–6–87; 8:45 am]

BILLING CODE 3510-22-M

[Modification No. 1 to Permit No. 461 P321A]

Marine Mammals; Permit Modification; Mr. Sherman C. Jones, III

Notice is hereby given that, pursuant to the provisions of §216.33 (d) and (e) of the Regulations Governing the Taking and Importing of Marine Mammals (50 CFR Part 216), Scientific Research Permit No. 461 issue to Mr. Sherman C. Jones, III, P.O. Box 3499, Galveston, Texas 77552, on April 5, 1984 (49 FR 14781) is modified as follows:

Section B.8 is replaced by:

8. This authority to take by harassment shall extend through December 31, 1988.

The effective date of this modification is December 31, 1986.

The Permit, as modified, and documentation pertaining to the modification are available for review in the following offices:

Office of Protected Species and Habitat Conservation, National Marine Fisheries Service, 1825 Connecticut Avenue, NW., Rm. 805, Washington, DC; and

Director, Southeast Region, National Marine Fisheries Service, 9450 Koger Boulevard, St. Petersburg, Florida 33702.

Dated: January 2, 1987.

Richard B. Roe,

Director, Office of Fisheries Management, National Marine Fisheries Service.

[FR Doc. 87-288 Filed 1-6-87; 8:45 am]

BILLING CODE 3510-22-M

[Modification No. 4 to Permit No. 305]

Marine Mammals; Modification of Permit; State of Washington, Department of Game

Notice is hereby given that pursuant to the provisions of § 216.33 (d) and (e) of the Regulations Governing the Taking and Importing of Marine Mammals (50 CFR Part 216), Scientific Research Permit No. 305 issued to the State of Washington, Department of Game, 600 North Capitol Way, Olympia, Washington, 98504-0091, On October 10, 1985 (45 FR 69533), as modified on March 16, 1981 (46 FR 18065), May 12, 1981 (46 FR 27153) October 15, 1981 (46 FR 50818), and January 6, 1986 (51 FR 422) is further modified as follows:

Section B-5 is replaced by:

5. This Permit is valid with respect to the activities authorized herein until March 31, 1987.

This modification becomes effective December 31, 1986.

This Permit as modified and documentation pertaining to the modification are available for review in the following offices:

Assistant Administrator for Fisheries, National Marine Fisheries Service, 1825 Connecticut Avenue, Washington, DC; and

Director, Northwest Region, National Marine Fisheries Service, 7600 Sand Point Way, NE. BIN C15700, Seattle, Washington, 98115.

Dated: January 2, 1987.

Richard B. Roe,

Director, Office of Fisheries Management, National Marine Fisheries Service.

[FR Doc. 87-289 Filed 1-6-87; 8:45 am]

BILLING CODE 3510-22-M

COMMITTEE FOR THE IMPLEMENTATION OF TEXTILE AGREEMENTS

Import Restraint Limits for Certain Cotton, Wool and Man-Made Fiber Textile Products Produced or Manufactured in the Philippines Effective on January 1, 1987; Correction

On December 30, 1986, a notice was published in the **Federal Register** (51 FR 47049), which established import restraint limits for certain specified categories of cotton, wool and man-made fiber textile and textile products, produced or manufactured in the Philippines and exported during the three-month period which began on January 1, 1987 and extends through March 31, 1987.

In the letter to the Commissioner of Customs which follows that notice, the following limits should be included:

Category	3-mo limit
342-T	13,584 dozen.
352-T	21,981 dozen.
359-NT	284,814 pounds.
359-T	304,172 dozen.
400	14,809 pounds.
442	1,646 dozen.
448	1,646 dozen.
636-T	273,262 dozen.
637-NT	11,352 dozen.
637-T	164,067 dozen.
642-T	13,584 dozen.
652-T	15,112 dozen.

Ronald I. Levin,

Acting Chairman, Committee for the Implementation of Textile Agreements.

[FR Doc. 87-352 Filed 1-6-87; 8:45 am]

BILLING CODE 3510-DR-M

COMMODITY FUTURES TRADING COMMISSION

Advisory Committee on CFTC-State Cooperation; Meeting

This is to give notice, pursuant to section 10(a) of the Federal Advisory Committee Act, 5 U.S.C. App. I, section 10(a), that the Commodity Futures Trading Commission's Advisory Committee on CFTC-State Cooperation will conduct a public meeting in the Fifth Floor Hearinq Room at the Commission's Washington, DC, headquarters located at Room 532, 2033 K Street, NW., Washington, DC 20581, February 5, 1987, beginning at 9:30 a.m. and lasting until 4:00 p.m. The agenda will consist of:

Agenda

1. Opening Remarks—Susan M. Phillips, Chairman, CFTC; Fowler C. West, Commissioner, CFTC and Chairman, Advisory Committee on CFTC-State Cooperation;

2. Report by Virginia H. Knauer, Special Assistant to the President for Consumer Affairs;

3. Discussion of the feasibility of voluntary screening by the media of advertising requests, as a first line of defense against fraudulent investment activity;

4. Discussion of North American Securities Administrators' Association (NASAA) study of bank-financed precious metals programs;

5. Report on the National Futures Association's state educational efforts;

6. Report on the implementation of the leverage provisions of the Futures Trading Act of 1986;

7. Status report and discussion regarding the adoption of the NASAA Model State Commodity Code by the states and the possible need for more uniform implementation of state commodity statutes and rules;

8. Discussion of the proposed Commission rules concerning foreign futures and options;

9. NASAA film on "boiler room" scams;

10. Report by the Commission's Division of Enforcement on cooperative enforcement efforts with the states; and

11. Discussion of other questions of concern to Advisory Committee members.

The Advisory Committee was created by the Commodity Futures Trading Commission for the purpose of receiving advice and recommendations on matters of joint concern to the States and the Commission arising under the Commodity Exchange Act, as amended. The purposes and objective of the Advisory Committee are more fully set forth in the April 11, 1986 Fifth Renewal Charter of the Advisory Committee.

The meeting is open to the public. The Chairman of the Advisory Committee, Commissioner Fowler C. West, is empowered to conduct the meeting in a fashion that will, in his judgment, facilitate the orderly conduct of business. Any member of the public who wishes to file a written statement with the Advisory Committee should mail a copy of the statement to the attention of: The Advisory Committee on CFTC-State Cooperation c/o Commissioner Fowler C. West, Commodity Futures Trading Commission, 2033 K Street, NW., Washington, DC 20581, before the meeting. Members of the public who wish to make oral statements should also inform Commissioner West in writing at the latter address at least three business days before the meeting. Reasonable provision will be made, if

time permits, for an oral presentation of no more than five minutes each in duration.

Issued by the Commission in Washington, DC, on December 31, 1986.

Jean A. Webb,

Secretary to the Commission.

[FR Doc. 87-185 Filed 1-6-87; 8:45 am]

BILLING CODE 6351-01-M

Enforcement of Nondiscrimination on the Basis of Handicap in Federally Conducted Programs

AGENCY: Commodity Futures Trading Commission.

ACTION: Notice of request for comments.

SUMMARY: On June 23, 1986, the Commission participated with other federal agencies in the joint publication of final rules (51 FR 22880) implementing section 504 of the Rehabilitation Act of 1973, as amended (29 U.S.C. 794). Section 504, as amended, prohibits discrimination on the basis of handicap in programs or activities conducted by federal executive agencies. The Commission's rules became effective on August 22, 1986, and are incorporated in Part 149 of the Commission's regulations, 17 CFR Part 149.

Section 149.110, 17 CFR 149.110, requires the Commission to conduct a self-evaluation of its compliance with section 504. As part of this evaluation, the Commission now requests comments from interested persons on the accessibility of the Commission's programs to handicapped persons.

DATE: Comments must be submitted on or before April 7, 1987.

ADDRESS: Comments may be submitted to the Office of the Secretariat, Commodity Futures Trading Commission, 2033 K Street, NW., Washington, DC 20581, telephone 202-254-7360 or TDD 202-254-8632.

FOR FURTHER INFORMATION CONTACT: Stacy Dean, Counsel to the Executive Director, Commodity Futures Trading Commission, 2033 K Street, NW., Washington, DC 20581, telephone number 202-254-7360 (voice) or 202-254-8632 (TDD).

SUPPLEMENTARY INFORMATION:

Background

On June 23, 1986, the Commission joined with twenty other federal agencies in issuing final rules to implement section 504 of the Rehabilitation Act of 1973, as amended (29 U.S.C. 794), which prohibits discrimination on the basis of handicap in executive agency programs or activities. *See* 51 FR 22880 (June 23, 1986). These rules were based on a prototype developed by the Department of Justice and were adopted by the Commission as Part 149 of its regulations, 17 CFR Part 149. *See* 51 FR at 22881. 17 CFR 149.110 requires that the Commission, by August 24, 1987, evaluate its policies and practices in light of section 504 and provide an opportunity to interested persons, including handicapped persons or organizations representing handicapped persons, to participate in this self-evaluation by submitting oral or written comments. Comments received will be kept for three years following the completion of the self-evaluation and will be open to public inspection, along with the Commission's own description of areas examined, any problems identified and any modifications made. *See* 17 CFR 149.110(c). Access to the file may be obtained by contacting Frank Alston, Office of Personnel, Commodity Futures Trading Commission, 2033 K Street, NW., Washington, DC 20581, telephone number 202-254-3275 or TDD 202-254-8632.

Commission Programs and Activities

The Commission regulates the commodity futures and commodity option markets and leverage transactions by, among other things, ensuring market integrity and protecting market participants against manipulation, abusive trade practices, and fraud. The Commission, in its licensing and registration of commodity professionals, does not subject qualified handicapped persons to discrimination on the basis of handicap. *See* 17 CFR 149.130(b)(6).[1] Similarly, the Commission does not subject qualified handicapped persons to discrimination on the basis of handicap in employment by the agency. *See* 17 CFR 149.140.[2]

The Commission believes that its existing facilities (all of which are leased) permit the agency to operate its programs and activities so that, when viewed in their entirety, such programs and activities are in general readily accessible to and usable by handicapped persons. *See* 17 CFR 149.149 and 149.150(a). The Commission has decided to renovate by February 1, 1987, the restrooms and drinking fountain on the fifth floor of its headquarters office, the floor on which public meetings are held, to make them accessible to persons in wheelchairs. In addition, the Commission has had braille notations placed in all elevators in its headquarters office.

The staff has also reviewed CFTC's other office space for accessibility to the handicapped. The Commission's 2000 L Street space in Washington, DC, and its offices in New York, Chicago, Kansas City, Los Angeles and Minneapolis are accessible from street level to handicapped persons. Chicago, New York and Minneapolis have accessible restrooms and the 2000 L Street space will have accessible restrooms in 1987.

With respect to the Commission's communication of its programs and activities, *see* 17 CFR 149.160, the Commission plans to tape at least two of its principal brochures, *Before Trading Commodities—Get the Facts* and *Economic Purposes of Futures Trading* and has had one brochure, *Before Trading Commodities—Get the Facts*, produced in braille. In addition, two telecommunication devices for the deaf (TDD's) have been purchased for use in the Commission's Office of Proceedings, which handles customer complaints against commodity brokers, and in the Office of Communication and Education Services, which informs the general public of the functions of the Commission. The TDD number for the Office of Proceedings is 202-254-3570 and the TDD number for the Office of Communication and Education Services is 202-254-8632. The latter number can be called (TDD or non-TDD) to request copies of brochures or tapes. The Commission also plans to note on its brochures whether they are available in braille or on tape and to publicize the TDD numbers. Finally, the Commission soon plans to apprise its own employees (as well as applicants and other interested persons), through the employee newsletter and notices at all Commission offices, of the provisions of 17 CFR Part 149 and their application to agency programs and activities. *See* CFR 149.111.

Issued December 31, 1986, in Washington, DC.

Jean A. Webb,

Secretary of the Commission.

[FR Doc. 87-184 Filed 1-6-87; 8:45 am]

BILLING CODE 6351-01-M

[1] Those wishing to become registered as a commodity professional should contact the industry's self-regulatory organization, the National Futures Association, 200 West Madison Street, Chicago, Illinois 60606, telephone number 312-726-0070.

[2] Those seeking information on employment opportunities at the Commission are encouraged to call Frank Alston, Office of Personnel, at the address or phone number listed above. Complaints of discrimination, whether related to employment or to participation in Commission programs or activities, may also be addressed to Mr. Alston. *See* 17 CFR 149.170 (b), (c).

DEPARTMENT OF DEFENSE

GENERAL SERVICES ADMINISTRATION

NATIONAL AERONAUTICS AND SPACE ADMINISTRATION

Federal Acquisition Regulation (FAR); Information Collection Under OMB Review

AGENCIES: Department of Defense (DOD), General Services Administration (GSA), and National Aeronautics and Space Administration (NASA).

ACTION: Notice.

SUMMARY: Under the provisions of the Paperwork Reduction Act of 1980 (44 U.S.C. Chapter 35), the Federal Acquisition Regulation (FAR) Secretariat has submitted to the Office of Management and Budget (OMB) a request to review and approve an extension of a currently approved information collection.

ADDRESS: Send comments to Franklin S. Reeder, FAR Desk Officer, Room 3235, NEOB, Washington, DC 20503.

FOR FURTHER INFORMATION CONTACT: Mr. Frank Van Lierde, Office of Federal Acquisition and Regulatory Policy (202) 523-3781.

SUPPLEMENTARY INFORMATION: a. *Purpose.* The examination of records by the Comptroller General clause and the two audit clauses, audit—negotiation and audit—formal advertising, implement the requirements of 10 U.S.C. 2313, 41 U.S.C. 254 AND 10 U.S.C. 2306. The statutory requirements are that the Comptroller General and/or agency shall have access to, and the right to, examine certain books, documents and records of the contractor for a period of 3 years after final payment. The record retention periods required of the contractor in the clauses are for compliance with the aforementioned statutory requirements. The information must be retained so that audits necessary for contract surveillance, verification of contract pricing, and reimbursement of contractor costs can be performed.

b. *Annual reporting burden:* The annual recordkeeping burden is estimated as follows: Recordkeepers, 19,336; annual hours per recordkeeper, 3.34; total recordkeeping hours 64,582; recordkeeping retention period 3 years.

Obtaining Copies of Proposals

Requesters may obtain copies from the FAR Secretariat (VRS), Room 4041, GSA Building, Washington, DC 20405, telephone (202) 523-4755. Please cite OMB Control No. 9000-0034, Examination of Records by Comptroller General/Audit.

Dated: December 30, 1986.

Margaret A. Willis,

FAR Secretariat.

[FR Doc. 87-196 Filed 1-6-87; 8:45 am]

BILLING CODE 6820-61-M

DEPARTMENT OF DEFENSE

Department of the Army

Military Traffic Management Command, Directorate of Plans and Strategic Mobility; Agency Information Collection Activities Under OMB Review

AGENCY: Military Traffic Management Command (MTMC).

ACTION: Notice of request for OMB approval of collection of information under the Paperwork Reduction Act and 5 CFR Part 1320.

SUMMARY: Notice is hereby given that the Military Traffic Management Command is requesting Office of Management and Budget approval for the collection of information on heavy hauler lowbed truck trailer owners and their inventory of such trailers. This information will be used by the Department of Defense for contingency planning and execution of deployment and mobilization plans in the event of a national defense emergency. Other federal agencies with emergency transportation responsibilities may also have access to this information for national emergency planning and execution purposes. This information will be collected annually by surveying heavy hauler lowbed truck trailer owners identified from state vehicle registration files and industry associations. The first survey will commence within thirty days of receipt of OMB approval.

Request for Information

Requests for information and copies of the proposed information collection approval request and supporting documentation may be sent to: HQ, Military Traffic Management Command, ATTN: MT-PLI, OMB Request, 5611 Columbia Pike, Falls Church, Virginia 22041-5050.

Public Comment

Comments on the proposed information collection request should be sent to: Office of Information and Regulatory Affairs, ATTN: Desk Officer for DOD, Office of Management and Budget, Washington, DC 20503.

FOR FURTHER INFORMATION CONTACT: CPT Richard T. Shipe, USA, HQ, Military Traffic Management Command, 5611 Columbia Pike, Falls Church, Virginia 22041-5050, Telephone (703) 756-2131.

[FR Doc. 87-188 Filed 1-6-87; 8:45 am]

BILLING CODE 3710-08-M

Military Traffic Management Command, Military Personal Property Symposium; Open Meeting

Announcement is made of meeting of the Military Personal Property Symposium. This meeting will be held on 29 January 1987 at the Stouffer Concourse Hotel, Crystal City, Arlington, Virginia, and will convene at 0830 hours and adjourn at approximately 1500 hours.

Proposed Agenda

The purpose of the symposium is to provide an open discussion and free exchange of ideas with the public on procedural changes to Personal Property Traffic Management Regulation (DOD 4500.34R), and the handling of other matters of mutual interest concerning the Department of Defense Personal Property Shipment and Storage Program.

All interested persons desiring to submit topics to be discussed should contact the Commander, Military Traffic Management Command, ATTN: MT-PPM, at telephone number 756-1600, between 0800-1530 hours. Topics to be discussed should be received on or before 14 January 1987.

Joseph R. Marotta,

Colonel, GS, Director of Personal Property.

[FR Doc. 87-189 Filed 1-6-87; 8:45 am]

BILLING CODE 3710-08-M

Army Science Board; Closed Meeting

In accordance with section 10(a)(2) of the Federal Advisory Committee Act (Pub. L. 92-463), announcement is made of the following Committee Meeting:

Name of the Committee: Army Science Board (ASB).

Dates of Meeting: 22-23 January 1987.

Times of Meeting: 0900-1700 hours, 22 January 1987; 0800-1400 hours, 23 January 1987.

Places: Pentagon, Washington, DC.

Agenda: The Army Science Board Ad Hoc Subgroup for Ballistic Missile Defense Follow-On will meet for briefings and discussions on ATC, SDC Budget, Delta 180 Results, Center Line, and KREMS Report. This meeting will be closed to the public in accordance with section 552b(c) of Title 5, U.S.C., specifically subparagraph (1) thereof, and Title 5, U.S.C., Appendix 1, subsection 10(d). The classified and nonclassified matters to be discussed are so inextricably intertwined so as to preclude opening any portion of the meeting. The ASB

Administrative Officer, Sally Warner, may be contacted for further information at (202) 695-3039 or 695-7046.

S. Gearhart,

Administrative Assistant, Army Science Board.

[FR Doc. 87-407 Filed 1-6-87; 10:37 am]

BILLING CODE 3710-08-M

DEPARTMENT OF ENERGY

National Petroleum Council, Coordinating Subcommittee on U.S. Oil and Gas Outlook; Meeting

Notice is hereby given that the Coordinating Subcommittee on U.S. Oil and Gas Outlook will meet in January 1987. The National Petroleum Council was established to provide advice, information, and recommendations to the Secretary of Energy on matters relating to oil and natural gas or the oil and natural gas industries. The Coordinating Subcommittee on U.S. Oil and Gas Outlook will be studying factors affecting the overall outlook for oil and gas in the U.S. Its analysis and findings will be based on information and data to be gathered by the various task groups.

The Coordinating Subcommittee on U.S. Oil and Gas Outlook will hold its ninth meeting on Tuesday, January 20, 1987, immediately following the adjournment of the Committee on U.S. Oil and Gas Outlook meeting, which will begin at 10:00 a.m., in the 29th Floor Conference Room of Tenneco Inc., Tenneco Building, 1010 Milam Street, Houston, Texas.

The tentative agenda for the Coordinating Subcommittee on U.S. Oil and Gas Outlook meeting follows:

1. Opening remarks by the Chairman and Government Cochairman.
2. Discuss study assignments.
3. Review draft report.
4. Discuss any other matters pertinent to the overall assignment from the Secretary of Energy.

The meeting is open to the public. The Chairman of the Coordinating Subcommittee on U.S. Oil and Gas Outlook is empowered to conduct the meeting in a fashion that will, in his judgment, facilitate the orderly conduct of business. Any member of the public who wishes to file a written statement with the Coordinating Subcommittee on U.S. Oil and Gas Outlook will be permitted to do so, either before or after the meeting. Members of the public who wish to make oral statements should inform Ms. Pat Dickinson, Office of Advanced Fuels, Technology, Extraction and Environmental Controls, Fossil Energy, 301/353-2430, prior to the meeting and reasonable provision will be made for their appearance on the agenda.

Summary minutes of the meeting will be available for public review at the Freedom of Information Public Reading Room, Room 1E-190, DOE Forrestal Building, 1000 Independence Avenue, SW., Washington, DC, between the hours of 9:00 a.m. and 4:00 p.m., Monday through Friday, except Federal holidays.

Issued at Washington, DC, on December 30, 1986.

Donald L. Bauer,

Principal Deputy Assistant Secretary, Fossil Energy.

[FR Doc. 87-295 Filed 1-6-87; 8:45 am]

BILLING CODE 6450-01-M

Economic Regulatory Administration

[ERA Docket No. 86-56-NG]

Border-to-Border Pipeline Co. Order Approving Blanket Authorization To Import Natural Gas From Canada

AGENCY: Economic Regulatory Administration, DOE.

ACTION: Notice of Order Approving a Blanket Authorization to Import Natural Gas from Canada.

SUMMARY: The Economic Regulatory Administration (ERA) of the Department of Energy (DOE) gives notice that it has issued an order granting blanket authorization to Border-to-Border Pipeline Company (Border-to-Border) to import Canadian natural gas on a short-term basis. The order issued in ERA Docket No. 86-56-NG authorizes Border-to-Border to import up to 400,000 Mcf of Canadian natural gas per day over a two-year term beginning on the date of first delivery of the import.

A copy of this order is available for inspection and copying in the Natural Gas Division Docket Room, GA-076, Forrestal Building, 1000 Independence Avenue SW., Washington, DC 20585, (202) 252-9478. The docket room is open between the hours of 8:00 a.m. and 4:30 p.m., Monday through Friday, except Federal holidays.

Issued in Washington, DC., December 30, 1986.

Robert L. Davies,

Director, Office of Fuels Programs, Economic Regulatory Administration.

[FR Doc. 87-249 Filed 1-6-87; 8:45 am]

BILLING CODE 6450-01-M

[ERA Docket No. 86-58-NG]

CanadianOxy Marketing Inc., Order Granting Blanket Authorization To Import Natural Gas From Canada

AGENCY: Economic Regulatory Administration, DOE.

ACTION: Notice of Order Granting Blanket Authorization to Import Natural Gas From Canada.

SUMMARY: The Economic Regulatory Administration (ERA) of the Department of Energy (DOE) gives notice that it has issued an order granting CanadianOxy Marketing, Inc. (CanadianOxy) blanket authorization to import natural gas from Canada. The order issued in ERA Docket No. 85-58-NG authorizes CanadianOxy to import up to 140 MMcf of Canadian gas per day, not to exceed 100 Bcf over a two-year period, for sale in the domestic spot market.

A copy of this order is available for inspection and copying in the Natural Gas Division Docket Room, GA-076, Forrestal Building, 1000 Independence Avenue SW., Washington, DC, 20585, (202) 586-9478. The docket room is open between the hours of 8:00 a.m. and 4:30 p.m., Monday through Friday, except Federal holidays.

Issued in Washington, DC, December 30, 1986.

Barton R. House,

Deputy Director, Office of Fuels Programs, Economic Regulatory Administration.

[FR Doc. 87-250 Filed 1-6-87; 8:45 am]

BILLING CODE 6540-01-M

Federal Energy Regulatory Commission

[Docket Nos. ER87-186-000, et al.]

Electric Rate and Corporate Regulation Filings; Arkansas Power & Light Co. et al.

January 2, 1987.

Take notice that the following filings have been made with the Commission:

1. Arkansas Power & Light Company

[Docket No. ER87-186-000]

Take notice that Arkansas Power & Light Company (AP&L) filed on December 23, 1986, a proposed First Amendement to Peaking Power Agreement amending the Peaking Power Agreement dated September 16, 1985 which is a supplement to the Power Coordination, Interchange & Transmission Agreement between City of Osceola, Arkansas and Arkansas Power & Light Company, dated December 22, 1982. The Amendment

extends the term of the Peaking Power Agreement and allows the amount of Peaking Capacity and associated energy to vary for each annual period beginning October 1, 1991 and each year thereafter dependent on the City's peak demand in the previous peak period May through September.

The proposed Amended Agreement will effect a savings of approximately $1.2 million in the proposed twelve month period ending September 30, 1992.

Comment date: January 15, 1987, in accordance with Standard Paragraph E at the end of this notice.

2. Boston Edison Company

[Docket No. ER87-183-000]

Take notice that on December 23, 1986, Boston Edison Company (Boston Edison) of Boston, Massachusetts, submitted a Support Agreement with Cambridge Electric Light Company (Cambridge) for Improvements to Boston Edison's Brighton Station 329.

Boston Edison requests waiver of the sixty day notice period. Boston Edison states that copies of this filing have been served on Commonwealth and on the Massachusetts Department of Public Utilities.

Comment date: January 15, 1987, in accordance with Standard Paragraph E at the end of this notice.

3. Delmarva Power & Light Company

[Docket No. El86-11-002]

Take notice that on December 22, 1986, Delmarva Power & Light Company (the Company) tendered for filing a compliance report in accordance with the Commission's Order issued December 10, 1986.

The Company states that pursuant to such order, it has refunded the excess revenues collected with interest through December 18, 1986. Interest was refunded in accordance with § 35.19a of the Commission's Regulations.

Comment date: January 15, 1987, in accordance with Standard Paragraph E at the end of this notice.

4. Gulf States Utilities Company

[Docket No. ER87-53-000]

Take notice that on November 26, 1986, Gulf States Utilities Company tendered for filing in journal form the accounting entries made to effect the treatment of the test energy approved in Docket No. ER85-582-001.

Comment date: January 15, 1987, in accordance with Standard Paragraph E at the end of this notice.

5. Monongahela Power Company, The Potomac Edison Company, West Penn Power Company

[Docket No. ER87-188-000]

Take notice that Allegheny Power Service Corporation tendered for filing on December 24, 1986, a modification dated December 15, 1986 to an Agreement concerning limited term and supplemental power service among Monongahela Power Company (Monogahela), The Potomac Edison Company (Potomac), West Penn Power Company (West Penn), and Potomac Electric Power Company (PEPCO). The Commission has previously designated the agreement as MP 38, PE 43, and WP 38.

Section 1 of the Modification revises the parties' Limited Term Power service schedule by providing for a demand rate of up to $7.70 per kilowatt per month.

Section 2 of the Modification revises the rate for Limited Term operating capacity and energy by inserting "up to" before the present formula (the lesser of (i) out-of-pocket costs (OPC) plus 2 mills or (ii) 110% of OPC).

Section 3 of the Modification establishes a lower limit to the total revenue realization for any transaction as 110% of OPC.

The parties have requested an effective date of January 1, 1987, and therefore request waiver of the Commission's notice requirements.

Comment date: January 15, 1987, in accordance with Standard Paragraph E at the end of this document.

Monongahela Power Company, The Potomac Edison Company, West Penn Power Company

[Docket No. ER87-189-000]

Take notice that Allegheny Power Service Corporation tendered for filing on December 24, 1986, a modification dated December 15, 1986 to an Agreement concerning limited term and supplemental power service among Monongahela Power Company (Monongahela), The Potomac Edison Company (Potomac), West Penn Power Company (West Penn), and Public Service Electric and Gas Company (PSEG). The Commission has previously designated the agreement as MP 43, PE 47, and WP 42.

Section 1 of the Modification revises the parties' Limited Term Power service schedule by providing for a demand rate of up to $7.70 per kilowatt per month.

Section 2 of the Modification revises the rate for Limited Term operating capacity and energy by inserting "up to" before the present formula (the lesser of (i) out-of-pocket costs (OPC) plus 2 mills or (ii) 110% of OPC).

Section 3 of the Modification establishes a lower limit to the total revenue realization for any transaction as 110% of OPC.

The parties have requested an effective date of January 1, 1987 and, therefore, request waiver of the Commission's notice requirements.

Comment date: January 15, 1987, in accordance with Standard Paragraph E at the end of this notice.

Monongahela Power Company, The Potomac Edison Company, West Penn Power Company

[Docket No. ER87-190-000]

Take notice that Allegheny Power Service Corporation tendered for filing on December 24, 1986, a modification dated December 15, 1986 to an Interconnection Agreement dated February 1, 1986 between West Penn Power Company and Duquesne Light Company (DUQ). The Commission has previously designated the Agreement as:

Section 1 of the Modification revises the parties' Short Term Power service schedule by providing for a demand rate of up to $1.777 per kilowatt per week.

Section 2 of the Modification revises the rate for OE Short Term power from 110% to "up to" 110% of out-of-pocket costs (OPC).

Section 3 of the Modification revises the rate for APS Short Term operating capacity and energy by inserting "up to" before the present formula (the lesser of (i) OPC plus 2 mills or (ii) 110% of OPC).

Section 4 of the Modification establishes a lower limit to the total revenue realization for any transaction as 110% of OPC.

The parties have requested an effective date of January 1, 1987, and therefore request waiver of the Commission's notice requirements.

Comment date: January 15, 1987, in accordance with Standard Paragraph E at the end of this notice.

Monongahela Power Company, The Potomac Edison Company, West Penn Power Company

[Docket No. ER87-192-000]

Take notice that Allegheny Power Service Corporation tendered for filing on December 24, 1986, a modification dated December 15, 1986 to an Interchange Agreement dated October 17, 1968 between Monongahela Power Company, Ohio Power Comany and Ohio Edison Company (OE). The Commission has previously designated the Agreement as:

Section 1 of the Modification revises the parties' Short Term Power service schedule by providing for a demand rate of up to $1.777 per kilowatt per week.

Section 2 of the Modification revises the rate for OE Short Term power from 110% to "up to" 110% of out-of-pocket costs (OPC).

Section 3 of the Modification revises the rate for APS Short Term operating capacity and energy by inserting "up to" before the present formula (the lesser of (i) OPC plus 2 mills or (ii) 110% of OPC).

Section 4 of the Modification establishes a lower limit to the total revenue realization for any transaction as 110% of OPC.

The parties have requested an effective date of January 1, 1987, and therefore request waiver of the Commission's notice requirements.

Comment date: January 15, 1987, in accordance with Standard Paragraph E at the end of this notice.

9. Monongahela Power Company, The Potomac Edison Company, West Penn Power Company

[Docket No. ER 87-193-000]

Take notice that Allegheny Power Service Corporation tendered for filing on December 24, 1986, a modification dated December 15, 1986 to an Agreement concerning limited term and supplemental power service among Monongahela Power Company (Monongahela), The Potomac Edison Company (Potomac), West Penn Power Company (West Penn), and Philadelphia Electric Company (PECO). The Commission has previously designated the agreement as MP 45, PE 49, and WP 44.

Section 1 of the Modification revises the parties' Limited Term Power service schedule by providing for a demand rate of up to $7.70 per kilowatt per month.

Section 2 of the Modification revises the rate for Limited Term operating capacity and energy inserting "up to" before the present formula (the lesser of (i) out-of-pocket costs (OPC) plus 2 mills or (ii) 110% of OPC).

Section 3 of the Modification establishes a lower limit to the total revenue realization for any transaction as 110% of OPC.

The parties have requested an effective date of January 1, 1987, and therefore request waiver of the Commission's notice requirements.

Comment date: January 15, 1987, in accordance with Standard Paragraph E at the end of this notice.

10. Monongahela Power Company, The Potomac Edison Company, West Penn Power Company

Docket No. ER87-194-000]

Take notice that Allegheny Power Service Corporation tendered for filing on December 24, 1986, a modification dated December 15, 1986 to an Agreement concerning limited term and supplemental power service among Monongahela Power Company (Monongahela), The Potomac Edison Company (Potomac), West Penn Power Company (West Penn), and Philadelphia Electric Company (PECO). The Commission has previously designated the agreement as MP 42, PE 46, and WP 41.

Section 1 of the Modification revises the parties' Limited Term Power service schedule by providing for a demand rate of up to $7.70 per kilowatt per month.

Section 2 of the Modification revises the rate for Limited Term operating capacity and energy inserting "up to" before the present formula (the lesser of (i) out-of-pocket costs (OPC) plus 2 mills or (ii) 110% of OPC).

Section 3 of the Modification establishes a lower limit to the total revenue realization for any transaction as 110% of OPC.

The parties have requested an effective date of January 1, 1987, and therefore request waiver of the Commission's notice requirements.

Comment date: January 15, 1987, in accordance with Standard Paragraph E at the end of this notice.

11. Monongahela Power Company, The Potomac Edison Company, West Penn Power Company

Docket No. ER87-195-000]

Take notice that Allegheny Power Service Corporation tendered for filing on December 24, 1986, a modification dated December 15, 1986 to an Agreement concerning limited term and supplemental power service among Monongahela Power Company (Monongahela), The Potomac Edison Company (Potomac), West Penn Power Company (West Penn), an Philadelphia Electric Company (PECO). The Commission has previously designated the agreement as MP 46, PE 50, and WP 45.

Section 1 of the Modification revises the parties' Limited Term Power service schedule by providing for a demand rate of up to $7.70 per kilowatt per month.

Section 2 of the Modification revises the rate for Limited Term operating capacity and energy inserting "up to" before the present formula (the lesser of (i) out-of-pocket costs (OPC) plus 2 mills or (ii) 110% of OPC).

Section 3 of the Modification establishes a lower limit to the total revenue realization for any transaction as 110% of OPC.

The parties have requested an effective date of January 1, 1987, and therefore request waiver of the Commission's notice requirements.

Comment date: January 15, 1987, in accordance with Standard Paragraph E at the end of this Document.

12. Monongahela Power Company, The Potomac Edison Company, West Penn Power Company

Docket No. ER87-196-000]

Take notice that Allegheny Power Service Corporation tendered for filing on December 24, 1986, a modification dated December 15, 1986 to an Agreement concerning limited term and supplemental power service among Monongahela Power Company (Monongahela), The Potomac Edison Company (Potomac), West Penn Power Company (West Penn), an Philadelphia Electric Company (PECO). The Commission has previously designated the agreement as MP 44, PE 48, and WP 43.

Section 1 of the Modification revises the parties' Limited Term Power service schedule by providing for a demand rate of up to $7.70 per kilowatt per month.

Section 2 of the Modification revises the rate for Limited Term operating capacity and energy inserting "up to" before the present formula (the lesser of (i) out-of-pocket costs (OPC) plus 2 mills or (ii) 110% of OPC).

Section 3 of the Modification establishes a lower limit to the total revenue realization for any transaction as 110% of OPC.

The parties have requested an effective date of January 1, 1987, and therefore request waiver of the Commission's notice requirements.

Comment date: January 15, 1987, in accordance with Standard Paragraph E at the end of this notice.

13. Nevada Power Company

Docket No. ER87-184-000]

Take notice that on December 23, 1986, Nevada Power Company (NPC) tendered for filing a Notice of Cancellation of the Power Coordination Agreement between Arizona Public Service Company (APS) NPC, FERC Rate Schedule No. 43, which provides for power coordination with APS.

NPC requests to cancel said Agreement effective January 31, 1987.

Copies of this filing have been served upon APS, Public Service Commission of Nevada, the Arizona Corporation Commission, and the Public Service Commission of Nevada.

Comment date: January 15, 1987, in accordance with Standard Paragraph E at the end of this notice

14. New England Power Company

[Docket No. ER87-197-000]

Take notice that on December 24, 1986, New England Power Company (NEP) tendered for filing amendments to the Service Agreements of the Towns of Merrimac and Groveland, Massachusetts (Towns) who receive firm all-requirements power service under NEP's FERC Electric Tariff, Original Volume No. 1.

NEP submits that these amendments modify the terms of NEP's service to the Towns in order to facilitate the Towns' receipt of the benefits of their allocations of power from the New York Power Authority. NEP requests waiver of the Commission's notice requirements so that these amendments may become effective, as contemplated under the amendments, July 1, 1985. As good cause for this request, NEP submits that waiver is necessary for the Towns to receive the full benefit of the terms of the amendment and that extensive negotiations delayed the timely filing of the amendments.

Comment date: January 15, 1987, in accordance with Standard Paragraph E at the end of this notice.

15. Oklahoma Gas and Electric Company)

[Docket No. ER87-191-000]

Take notice that on December 24, 1986, Oklahoma Gas and Electric Company (OG&E) tendered for filing a modification to its Fuel Cost Adjustment provision that is included in its Rate Schedule WM-1, Firm Power (Municipalities), Rate Schedule WC-1, Firm Power (Cooperatives), Rate Schedule WM-2, Supplemental Service (Municipalities), and a revised Index of Purchasers (Municipalities), all of which is included in the Oklahoma Gas and Electric Company FERC Electric Tariff, 1st Revised Volume No. 1.

The modification to the Fuel Cost Adjustment provision is necessary so that the benefits of the TEGR (Trade Electricity for Gas Rider) program that is now in effect for certain retail customers in Oklahoma and Arkansas will flow through to the benefit of the wholesale customers even though such wholesale customers are non-participants in such program. The Index of Purchasers (Municipalities) is being revised to accurately reflect those towns to whom the Company now supplies wholesale electric service.

Copies of this filing have been served on Arkansas Valley Electric Cooperative, KAMO Electric Cooperative, each wholesale municipality to whom the Company supplies electric service, the Oklahoma Corporation Commission and the Arkansas Public Service Commission.

Comment date: January 15, 1987, in accordance with Standard Paragraph E at the end of this notice.

16. Portland General Electric Company

Docket No. ER87-198-000]

Take notice that on December 29, 1986, Portland General Electric Company (PGE) tendered for filing a new Service Agreement with the City of Santa Clara made under the Company's second revised Electric Service Tariff, Volume No. 1.

PGE requests an effective date of August 1, 1986 and, therefore, requests a waiver of the Commission's notice requirements.

Copies of this filing were served upon parties having Service Agreements with PGE, parties to the Intercompany Pool Agreement (Revised), the intervenors in Docket No. ER77-131, and the Oregon Public Utility Commissioner.

Comment date: January 15, 1987, in accordance with Standard Paragraph E at the end of this notice.

17. Wisconsin Public Service Corporation

[Docket No. ER87-187-000]

Take notice that Wisconsin Public Service Corp. On December 24, 1986, tendered for filing a new service agreement for all requirements service to the City of Wisconsin Rapids ("the city"), Wisconsin. The new agreement revises the initial term of service, and provides for a change from a single 115 Kv delivery point to two 46 Kv delivery points. The delivery point change results from the company's leasing certain electric facilities from the city under a lease agreement included with the filing, and converts the city from the non-totalized to the totalized service provisions of the W-1 tariff. The company, with the support of the city, has requested an effective date of January 1, 1987, for the new service agreement.

The company states that copies of the executed service agreement were sent to the city and the Public Service Commission of Wisconsin.

Comment date: January 15, 1987, in accordance with Standard Paragraph E at the end of this notice.

18. The Washington Water Power Company

[Docket No. ER87-185-000]

Take notice that on December 23, 1986, The Washington Water Power Company (Washington) tendered for filing copies of First Revised Sheet No. 4 Superseding Original Sheet No. 4 to Washington's FERC Electric Tariff Original Volume No. 3 (Tariff 3). The revised W-1.3 rate, up to 22.2 mills per kilowatt-hour during all hours of the year for energy delivered from noncontrollable hydroelectric resources, will allow sales at less than 22.2 mills. Washington also included the Original Index of Purchasers that have executed Service Agreements under Tariff 3, and requested that it be accepted by the Commission.

Washington proposes that the Tariff 3 supersede Washington's Rate Schedule FPC No. 88 "Wholesale Nonfirm Energy for Export" to become effective 60 days following the Commission's receipt of this filing.

Washington also proposes that the Tariff 3 rates supersede the specified rates in Washington's Rate Schedule FPC No. 88 as applied within Washington's Rate Schedules FPC/FERC Nos. 86 (City of Pasadena), 87.1 (Service Schedule W-1 under the Intercompany Pool Agreement), 88.1 (Pacific Gas and Electric Company), 111 (San Diego Gas & Electric Company), 114 (Southern California Edison Company), and 115 (San Diego Gas & Electric Company).

Washington requests that (i) the First Revised Sheet No. 4 of Tariff 3, (ii) the proposal that Tariff 3 supersede Washington's Rate Schedule FPC No. 88, and (iii) the above proposal regarding Tariff 3 rates superseding Washington's FPC No. 88 rates as applied within designated Rate Schedules be accepted by the Commission to become effective 60 days following the Commission's receipt of the filing.

Comment date: January 15, 1987, in accordance with Standard Paragraph E at the end of this notice.

Standard Paragraphs

E. Any person desiring to be heard or to protest said filing should file a motion to intervene or protest with the Federal Energy Regulatory Commission, 825 North Capital Street, NE., Washington, D.C. 20426, in accordance with Rules 211 and 214 of the Commission's Rules of Practice and Procedure (18 CFR 385.211 and 385.214). All such motions or protests should be filed on or before the comment date. Protests will be considered by the Commission in

determining the appropriate action to be taken, but will not serve to make protestants parties to the proceeding. Any person wishing to become a party must file a motion to intervene. Copies of this filing are on file with the Commission and are available for public inspection.

Kenneth F. Plumb,

Secretary.

[FR Doc. 87-282 Filed 1-6-87; 8:45 am]

BILLING CODE 6717-01-M

[Project Nos. 6947-001 4644-001 8914-000 8045-001 9887-000]

F. & T. Services Corp. et al; Availability of Environmental Assessment and Finding of No Significant Impact

In the matter of F. & T. Services Corporation, Stevens & Thompson Paper Company Colorado River Water-Conservation District & the Water Users' Association No. 1, James River Paper Company, Inc., Northern Colorado Water Conservancy District

January 2, 1987.

In accordance with National Environmental Policy Act of 1969, the Office of Hydropower Licensing, Federal Energy Regulatory Commission (Commission), has reviewed the applications for major and minor licenses (or exemptions) listed below and has assessed the environmental impacts of the proposed developments.

Project No.	Project name	State	Water body	Nearest town or county	Applicant
6947-001	Lake Claiborne Dam	LA	Bayou D'Arbonne/Lake Claiborne	Homer	F. & T. Services Corporation
4644-000	Dehowa	NY	Batten Kill River	Greenwich	Stevens & Thompson Paper Company.
8914-000	Taylor Draw	CO	White River	Rangely	Colorado River Water Conservation Dist. and the Water Users' Association No. 1.
8045-000	Brooklyn	NH	Upper Ammonoosuc River	Groveton	James River Paper Company, Inc.
8987-000	Horsetooth Dam No. 1	CO	Charles Hansen Supply Canal	Fort Collins	Northern Colorado Water Conservancy District.

Environmental assessments (EA's) were prepared for the above proposed projects. Based on independent analyses of the above actions as set forth in the EA's, the Commission's staff concludes that these projects would not have significant effects on the quality of the human environment. Therefore, environmental impact statements for these projects will not be prepared. Copies of the EA's are available for review in the Commission's Division of Public Information, Room 1000, 825 North Capitol Street NE., Washington, DC 20426.

Kenneth F. Plumb,

Secretary.

[FR Doc. 87-278 Filed 1-6-87; 8:45 am]

BILLING CODE 6717-01-M

State of New Mexico, Section 108 NGPA Determination Tenneco Oil Co., Hughes LS No. 19 Well, of Petition to Withdraw Well Category Determination

[Docket No. GP86-60-000; FERC No. JD86-15972]

January 2, 1987.

On July 11, 1986, the Bureau of Land Management, Albuquerque, New Mexico District Office (BLM) petitioned the Commission to reopen and vacate a final determination[1] obtained by Tenneco Oil Company, operator of the Huges LS No. 19 Well, that the well continued to qualify as an NGPA 108 stripper gas well, even though it produced more than 60 Mcf per production day during a 90-day production period ending August 31, 1985. The determination was on the ground that the increased production was a result of pressure build-up caused by the well being temporarily shut-in. Gas from the well is sold to El Paso Natural Gas Company.

At the time Tenneco filed its above-mentioned application for continuing qualification with BLM, the Hughes LS No. 19 well stripper gas well, and Tenneco's application therefor was pending before BLM. Subsequent to the continuing qualification filing, the well failed to qualify for NGPA section 108 status during a deferred determination period provided for by § 271.807 of the Commission's regulations,[2] and the application was withdrawn by Tenneco.

Any person desiring to be heard or to protest this petition should file a motion to intervene or protest in accordance with Rules 214 [3] or 211 [4] of the Commission's Rules of Practice and Procedure. All motions to intervene or protests should be submitted to the Federal Energy Regulatory Commission, 825 North Capitol Street, NE., Washington, DC 20426, not later than 15 days following publication of this notice in the **Federal Register**. All protests will be considered by the Commission, but will not serve to make protestants parties to the proceeding. Any person wishing to become a party must file a motion to intervene in accordance with Rule 214. Copies of the petition are on file with the Commission and available for public inspection.

Kenneth F. Plumb,

Secretary.

[FR Doc. 87-277 Filed 1-6-87; 8:45 am]

BILLING CODE 6717-01-M

[1] FERC No. JD86-15972, BLM Docket No. NM-2083-85-PB. The determination, dated February 24, 1986, was received by the Commission March 3, 1986.

[2] 18 CFR 271.807 (1986).

[3] 18 CFR 385.214 (1986).

[4] 18 CFR 285.211 (1986).

[Docket Nos. QF86-147-000 et al.]

Small Power Production and Cogeneration Facilities; Qualifying Status; Certificate Applications, etc.; McKittrick CoGen, Inc., et al.

December 31, 1986.

Comment date: Thirty days from publication in the **Federal Register**, in accordance with Standard Paragraph E at the end of this notice.

Take notice that the following filings have been made with the Commission.

1. McKittrick CoGen, Inc.

[Docket No. QF86-147-000]

On December 15, 1986, McKittrick CoGen, Inc. (Applicant), of P.O. Box 19398, Houston, Texas 77224 submitted for filing an application for certification of a facility as a qualifying cogeneration facility pursuant to § 292.207 of the Commission's regulations. No determination has been made that the submittal constitutes a complete filing.

The topping-cycle cogeneration facility will be located in Kern County, California. The facility will consist of one (1) combustion turbine-generator and one (1) heat recovery steam generator. Steam recovered from the facility will be used for enhanced oil recovery by Cities Service Oil and Gas Corporation. The net electric power production capacity will be 44,204

kilowatts. The primary energy source will be natural gas. Installation of the facility will begin in March 1988.

2. Foster Wheeler Hunterdon, Inc.

[Docket No. QF87-134-000]

On December 10, 1986, Foster Wheeler Hunterdon, Inc. (Applicant), of 110 South Orange Avenue, Livingston, New Jersey 07039, submitted for filing an application for certification of a facility as a qualifying cogeneration facility pursuant to § 292.207 of the Commission's regulations. No determination has been made that the submittal constitutes a complete filing.

The topping-cycle cogeneration facility will be located in Clinton, New Jersey and will consist of two combustion turbine generators, two heat recovery steam generators, and an extraction/condensing steam turbine generator. Thermal energy recovered from the facility in the form of steam will be sold to the Hunterdon Developmental Center to provide space heating. The net electric power production capacity will be 67.82 MW. The primary source of energy will be natural gas. Construction of the facility is scheduled to begin in 1987.

3. Granite Road CoGen, Inc.

[Docket No. QF86-146-000]

On December 15, 1986, Granite Road Cogeneration, Inc. (Applicant), of P.O. Box 19398, Houston, Texas 77224 submitted for filing an application for certification of a facility as a qualifying cogeneration facility pursuant to § 292.207 of the Commission's regulations. No determination has been made that the submittal constitutes a complete filing.

The topping-cycle cogeneration facility will be located in Kern County, California. The facility consists of one (1) combustion turbine-generator and one (1) heat recovery steam generator. Steam recovered from the facility will be used for enhanced oil recovery by Cities Service Oil and Gas Corporation. The net electric power production capacity will be 44,370 kilowatts. The primary energy source will be natural gas. Installation of the facility will begin in April 1988.

4. Long Lake Energy Corp., Moose River Corp. and Prudential Interfunding Corp.

[Docket No. QF86-515-001]

On December 9, 1986, Long Lake Energy Corporation, Moose River Corporation, and Prudential Interfunding Corporation (Applicants) of 420 Lexington Avenue, Suite 440, New York, New York 10170, c/o Long Lake Energy Corporation, 420 Lexington Avenue, Suite 440, New York, New York 10170, and Three Gateway Center, 100 Mulberry Street, Newark, New Jersey 01702 respectively, submitted for filing an application for recertification of a facility as a qualifying small power production facility pursuant to § 292.207 of the Commission's regulations. No determination has been made that the submittal constitutes a complete filing.

The 11.8 MW hydroelectric facility (FERC P. 4349-000) will be located in Lewis County, New York.

Recertification of the facility is requested due to the change in ownership. Under the instant application, the ownership of the facility will be transferred in two stages from Long Lake Energy Corporation, the previous owner to Moose River Corporation and Prudential Interfunding Corporation.

A separate application is required for a hydroelectric project license, preliminary permit or exemption from licensing. Comments on such applications are requested by separate public notice. Qualifying status serves only to establish eligibility for benefits provided by PURPA, as implemented by the Commission's regulations, 18 CFR Part 292. It does not relieve a facility of any other requirements of local, State or Federal law, including those regarding siting, construction, operation, licensing and pollution abatement.

5. Energenics/Glendon, Inc.

[Docket No. QF87-165-000]

On December 16, 1986, Energenics/Glendon, Inc. (Applicant), of 711 Lehigh Street, Easton, Pennsylvania 18042 submitted for filing an application for certification of a facility as a qualifying small power production facility pursuant to § 292.207 of the Commission's regulations. No determination has been made that the submittal constitutes a complete filing.

The small power production facility will be located in Northhampton County, Pennsylvania. The net electric power production capacity will be approximately 11 megawatts. The primary energy source will be biomass in the form of municipal solid waste. Natural gas or oil will be used in the facility for required start-up and control purposes. However, these fossil fuel uses will not exceed 25 percent of the total energy input to the facility in any calendar year.

6. Richmond Cogeneration Ltd. Partnership

[Docket No. QF87-145-000]

On December 15, 1986, Richmond Cogeneration Limited Partnership (Applicant), of 25 Eagle Street, Albany, New York 12207, submitted for filing an application for certification of a facility as a qualifying cogeneration facility pursuant to § 292.207 of the Commission's regulations. No determination has been made that the submittal constitutes a complete filing.

The topping-cycle cogeneration facility will be located in Staten Island, New York and will consist of a combustion turbine generator, a heat recovery steam generator, and an extraction/condensing steam turbine generator. Steam recovered from the facility will be used for district heating and cooling and industrial drying and heating. The electric power production capacity of the facility will be 80 MW. The primary source of energy will be natural gas. Construction of the facility is scheduled to commence in 1987.

Standard Paragraphs

E. Any person desiring to be heard or to protest said filing should file a motion to intervene or protest with the Federal Energy Regulatory Commission, 825 North Capitol Street, NW., Washington, DC 20426, in accordance with Rules 211 and 214 of the Commission's Rules of Practice and Procedure (18 CFR 385.211 and 385.214). All such motions or protests should be filed on or before the comment date. Protests will be considered by the Commission in determining the appropriate action to be taken, but will not serve to make protestants parties to the proceeding. Any person wishing to become a party must file a motion to intervene. Copies of this filing are on file with the Commission and are available for public inspection.

Kenneth F. Plumb,

Secretary.

[FR Doc. 87-284 Filed 1-6-87; 8:45 am]

BILLING CODE 6717-01-M

[Docket No. TA87-1-20-003]

Algonquin Gas Transmission Co.; Proposed Changes in FERC Gas Tariff

January 2, 1987.

Take notice that Algonquin Gas Transmission Company ("Algonquin Gas") on December 19, 1986, tendered for filing Substitute Ninth Revised Sheet No. 205 to its FERC Gas Tariff, Second Revised Volume No. 1.

Algonquin Gas states that Substitute Ninth Revised Sheet No. 205 is being filed pursuant to the provisions of section 7 of its Rate Schedule F-4 to reflect in its rates, effective December 4, 1986, and adjustment in the Contract

Adjustment Demand Rate to be charged by its pipeline supplier, Texas Eastern Transmission Corporation ("Texas Eastern"), as set forth in Texas Eastern's December 2, 1986 filing.

Algonquin Gas requests that the Commission accept the above tariff sheet to be effective as proposed.

Algonquin Gas notes that a copy of this filing is being served upon each affected party and interested state commission.

Any person desiring to be heard or to protest said filing should file a motion to intervene or protest with the Federal Energy Regulatory Commission, 825 North Capital Street, NW., Washington, DC 20426, in accordance with Rules 211 and 214 of the Commission's Rules of Practice and Procedure (18 CFR 385.211, 385.214). All such motions or protests should be filed on or before January 9, 1987. Protests will be considered by the Commission in determining the appropriate action to be taken but will not serve to make protestants parties to the proceeding. Any person wishing to become a party must file a motion to intervene. Copies of this filing are on file with the Commission and are available for public inspection.

Kenneth F. Plumb,

Secretary.

[FR Doc. 87-279 Filed 1-6-87; 8:45 am]

BILLING CODE 6717-01-M

[Docket No. TA87-1-61-000, 001]

Bayou Interstate Pipeline System; Tariff filing

January 2, 1987.

Take notice that Bayou Interstate Pipeline System (Bayou), on December 24, 1986 tendered for filing Second Revised Sheet No. 4, Fifth Revised Sheet No. 4A and Fourth Revised Sheet No. 5 of its FERC Gas Tariff, Original Volume No. 1. The tariff sheets were filed pursuant to the Purchased Gas Cost Adjustment and Incremental Pricing Adjustment provisions contained in sections 15 and 16 of Bayou's tariff. Copies of the filing were served upon Bayou's jurisdictional customer and interested state regulatory agencies.

Any person desiring to be heard or to protest said filing should file a motion to intervene or protest with the Federal Energy Regulatory Commission, 825 North Capitol Street, NE., Washington, DC 20426, in accordance with Rules 211 and 214 of the Commission's rules of practice and procedure (18 CFR 385.211, 385.214). All such motions or protests should be filed on or before January 9, 1987. Protests will be considered by the Commission in determining the appropriate action to be taken, but will not serve to make protestants arties to the proceeding. Any person wishing to become a party must file a motion to intervene. Copies of this filing are on file with the Commission and are available for public inspection.

Kenneth F. Plumb,

Secretary.

[FR Doc. 87-280 Filed 1-6-87; 8:45 am]

BILLING CODE 6717-01-M

[Docket No. SA87-14-000]

Chevron U.S.A. Inc.; Petition for Adjustment and Extension of Time to Refund BTU Obligations

Issued January 2, 1987.

On November 3, 1986, Chevron U.S.A. Inc. filed with the Federal Energy Regulatory Commission a petition for waiver pursuant to Commission Order No. 399-A,[1] section 502(c) of the Natural Gas Policy Act of 1978,[2] and Subpart K of the Commission's Rules of Practice and Procedure.[3] Petitioner seeks waiver of that portion of its Btu refund obligation attributable to royalties paid by petitioner to (1) the Minerals Management Service of the U.S. Department of the Interior (MMS) prior to November 9, 1981, and (2) the State of Louisiana for sales of gas from state-owned leases. Under Order No. 399, these refunds were due by November 5, 1986,[4] but this deadline has been postponed.[5]

Petitioner bases its request for waiver relative to Federal leases on grounds that MMS has taken the position that such refunds are barred by the statute of limitations under section 10 of the Outer Continental Shelf Lands Act.[6] Petitioner bases its request for waiver relative to leases owned by the State of Louisiana on grounds that the Louisiana State Minerals Board has adopted a resolution prohibiting producers from recovering Btu refund amounts attributable to state royalty payments by deductions from current royalty payments.

The procedures applicable to the conduct of this adjustment proceeding are found in Subpart K of the Commission's Rules of Practice and Procedure. Any person desiring to participate in this adjustment proceeding must file a motion to intervene in accordance with the provision of such Subpart K. All motions to intervene must be filed within 15 days after publication of this notice in the **Federal Register.**

Kenneth F. Plumb,

Secretary.

[FR Doc. 87-281 Filed 1-6-87; 8:45 am]

BILLING CODE 6717-01-M

[Docket No. SA87-23-000]

Cockrell Oil Corp.; Petition for Adjustment

January 2, 1987.

Take notice that on November 5, 1986, Cockrell Oil Corporation (Cockrell) filed with the Commission on behalf of itself and the working interest owners, a petition for adjustment under section 502(c) of the Natural Gas Policy Act of 1978 (NGPA) requesting relief from the Btu refund obligations of Order Nos. 399, 399-A, and 399-B. Cockrell requests the Commission to waive Cockrell's obligation to make Btu refunds attributable to royalty payments previously made by Cockrell to certain royalty interest owners.

Cockrell states that amounts owed by royalty interest owners for which it is responsible under Order Nos. 399, *et al.* are uncollectible. Cockrell claims that all but two of its wells were plugged and abandoned prior to the issuance of the Commission's final order regarding Btu refunds. Furthermore, Cockrell states it has no ongoing relationship with the royalty owners and that the refund obligation would impose upon it a grave financial hardship.

The procedures applicable to the conduct of this adjustment proceeding are found in Subpart K of the Commission's Rules of Practice and Procedure. Any person desiring to participate in this adjustment proceeding must file a motion to intervene in accordance with the provisions in Rule 214. All motions to intervene must be filed with 15 days

---

[1] Refunds Resulting from Btu Measurement Adjustments, 49 FR 46353 (November 26, 1984); FERC Stats. & Regs. [Regulations Preambles 1982-1985] ¶ 30,612.

[2] 15 U.S.C. 3412(c) (1982).

[3] 18 CFR 385.1101 through 385.1117 (1986).

[4] 49 Fed. Reg. 37,735 at 37,740 (September 26, 1984), FERC Stats. & Regs. [Regulations Preambles 1982-1985] ¶ 30,597 at p. 31,150. In Order No. 399, the Commission established refund procedures for charges for natural gas that exceeded NGPA ceilings as a result of Btu measurements based on the water vapor content of the gas "as delivered," rather than on a water-staturated basis. In so doing, the Commission was implementing the decision in Interstate Natural Gas Association of America v. Federal Energy Regulatory Commission, 716 F.2d 1 (D.C. Cir. 1983), *cert. denied*, 465 U.S. 1108 (1984).

[5] In Order No. 399-C, issued November 5, 1986, the Commission postponed the November 5, 1986 deadline for payment of Btu refunds attributable to royalty payments for any first seller that has a petition on file with the Commission seeking waiver of or postponement of the deadline to pay Btu refunds attributable to royalty payments.

[6] 43 U.S.C. 1339 (1982).

after publication of this notice in the **Federal Register.**

Kenneth F. Plumb,

Secretary.

[FR Doc. 87-268 Filed 1-6-87; 8:45 am]

BILLING CODE 6717-01-M

[Docket No. SA87-5-000]

Crystal Oil Co.; Petition for Adjustment

January 2, 1987.

Take notice that on October 3, 1986, Crystal Oil Company (Crystal) filed with the Federal Energy Regulatory Commission a petition for waiver of Btu refund obligations resulting from the promulgation of Order Nos. 399[1] and 399-A[2].

Crystal states that its liabilities exceed its assets and that it has filed a voluntary petition with the United States Bankruptcy Court. Crystal states further that payment of Btu refunds, under its current financial condition, would subject it to special hardships, inequities, or an unfair distribution of burdens.

The procedures applicable to the conduct of this adjustment proceeding are set forth in Rules 1101-1117 (18 CFR 385.1101 through 385.1107 (1986)) of the Commission's Rules of Practice and Procedure. Any person desiring to participate in this adjustment proceeding must file a motion to intervene in accordance with Rule 1105. All motions to intervene must be filed within 15 days after publication of this notice in the **Federal Register.**

Kenneth F. Plumb,

Secretary.

[FR Doc. 87-269 Filed 1-6-87; 8:45 am]

BILLING CODE 6717-01-M

[Docket No. SA87-9-000]

Mr. and Mrs. Robert Fisher; Petition for Adjustment

January 2, 1987.

Take notice that on October 21, 1986, Mr. and Mrs. Robert Fisher filed with the Commission a petition for adjustment pursuant to section 502(c) of the Natural Gas Policy Act of 1978 and Part 385 (Subpart K) of the Commission's regulations. The Fishers seek a waiver of their obligations under Commission Order Nos. 399, 399-A and 399-B requiring payment to purchasers of Btu adjustment refunds by first sellers of natural gas. In Order No. 399, the Commission established refund procedures for charges for natural gas above NGPA ceilings as a result of Btu measurements based on the water vapor content of the gas "as delivered," rather than on a water-saturated basis. In so doing, the Commission was implementing the decision in Interstate Natural Gas Association of America v. Federal Energy Regulatory Commission.[1]

The Fishers have both a royalty and a working interest in five wells located in DeSoto Parish, Louisiana. The gas is sold to Mich-La Oil. The Fishers state that they have outstanding Btu refund obligations of approximately $850 and that payment of these refunds will result in special hardship to them.

The procedures applicable to the conduct of this waiver proceeding are found in Subpart K of the Commission's Rules of Practice and Procedure. Any person desiring to participate in this adjustment proceeding must file a motion to intervene in accordance with the provisions of Rules 214 and 1105 of the Commission's Rules of Practice and Procedure. All motions to intervene must be filed within 15 days after publication of this notice in the **Federal Register.**

Kenneth F. Plumb,

Secretary.

[FR Doc. 87-270 Filed 1-6-87; 8:45 am]

BILLING CODE 6717-01-M

[Docket No. SA87-17-000]

High Chapparal Oil Co.; Petition for Adjustment

January 2, 1987.

Take notice that on November 4, 1986, High Chapparal Oil Company (High Chapparal) filed with the Federal Energy Regulatory Commission a petition for waiver of Btu refund obligation resulting from the promulgation of Order Nos. 399,[1] 399-A,[2] and 399-B.[3]

In support of its petition, High Chapparal states that, in its effort to comply with the above-mentioned three orders, it has made reimbursements except for those with respect to the other one-half working interest in the lease and one royalty interest amount; High Chapparal states that these reimbursements remain outstanding because the other one-half working interest owner has declared bankruptcy and is unable to pay his share of the refunds, and that High Chapparal has no contractual relationship with which to effect a billing adjustment. Further, High Chapparal states that a portion of the refund amount would be subject to the statutes of limitation. In sum, High Chapparal states that because of the above-described circumstances and because of its financial condition, it requests waiver of the refund obligations.

The procedures applicable to the conduct of this adjustment proceeding are set forth in Rules 1101-1117 (18 CFR 385.1101 through 385.1107 (1986)) of the Commission's Rules of Practice and Procedure. Any person desiring to participate in this adjustment proceeding must file a motion to intervene in accordance with Rule 1105. All motions to intervene must be filed within 15 days after publication of this notice in the **Federal Register.**

Kenneth F. Plumb,

Secretary.

[FR Doc. 87-271 Filed 1-6-87; 8:45 am]

BILLING CODE 6717-1-M

[Docket No. RP86-165-001]

Kentucky West Virginia Petition for Waiver and for Direct Billing Authorization

January 2, 1987

On September 30, 1986, Kentucky West Virginia Gas Company (Kentucky West) filed with Federal Energy Regulatory Commission a petition for waiver of sections 271, 273, and 284 of the Commission's regulations (18 CFR Parts 271, 273 and 284 (1986)) so that it can retroactively qualify 1,875 wells for Natural Gas Policy Act of 1978 (NGPA) section 107(c)(4) and section 108 incentive prices (15 U.S.C. 3317(c)(4) and 3318 (1982)). Also, Kentucky West Virginia seeks authorization to direct bill its customers once the above-mentioned wells have been qualified for NGPA incentive pricing.

In support of its request for waiver, Kentucky West states that the grant of such waiver comes within the contemplation of current Commission regulations and that it should not be penalized for relying on earlier Commission regulations which denied first sale status to most pipeline production and which the courts subsequently determined to be erroneous. Finally, with regard to this request, Kentucky West states that the grant of waiver is consistent with Commission precedent.

---

[1] 49 FR 37735 (September 26, 1984), FERC Stats. & Regs. [Regs. Preambles 1982-1985] ¶ 30,597.

[2] 49 FR 46353 (November 26, 1984), FERC Stats. & Regs. [Regs. Preambles 1982-1985] ¶ 30,612.

[1] 716 F.2d 1 (D.C. Cir. 1983), *cert. denied* 465 U.S. 1108 (1984).

[1] 49 FR 37,735 (September 26, 1984), FERC Stats. & Regs. [Regs. Preambles 1982-1985] ¶ 30,597.

[2] 49 FR 46,353 (November 26, 1984), FERC Stats. & Regs. [Regs. Preambles 1982-1985] ¶ 30,612.

[3] 50 FR 30,141 (July 24, 1985), FERC Stats. & Regs. [Regs. Premables 1982-1985] ¶ 30,651.

In support of its request for direct billing authorization, Kentucky West states that court and Commission precedents, and the NGPA mandate such authorization. Also, Kentucky West states that its customers will suffer an undue burden if direct billing authorization is denied.

Any person desiring to be heard or to protest this petition should file a motion to intervene or protest in accordance with Rule 214 or 211 of the Commission's rules of practice and procedure.[1] All motions to intervene or protests should be submitted to the Federal Energy Regulatory Commission, 825 North Capitol Street, NE., Washington, DC 20426, not later than 30 days following publication of this notice in the **Federal Register**. All protests will be considered by the Commission but will not serve to make protestants parties to the proceeding. Any person wishing to become a party must file a motion to intervene in accordance with Rule 214. Copies of the petition filed in this proceeding are on file with the Commission and available for public inspection.

Kenneth F. Plumb,

Secretary.

[FR Doc. 87-276 Filed 1-6-87; 8:45 am]

BILLING CODE 6717-01-M

[Docket No. SA87-7-000]

Tenneco Oil Co.; Petition for Adjustment

January 2, 1987.

On October 17, 1986, Tenneco Oil Company filed with the Federal Energy Regulatory Commission a petition for waiver pursuant to Commission Order No. 399-A,[1] section 502(c) of the Natural Gas Policy Act of 1978,[2] and Subpart K of the Commission's Rules of Practice and Procedure.[3] Petitioner seeks waiver of that portion of its Btu refund obligation attributable to royalties paid by petitioner to (1) the Minerals Management Service of the U.S. Department of the Interior (MMS) prior to November 9, 1981, and (2) the State of Louisiana for sales of gas from state-owned leases. Under Order No. 399, these refunds were due by November 5, 1986,[4] but this deadline has been postponed.[5]

Petitioner bases its request for waiver relative to Federal leases on grounds that MMS has taken the position that such refunds are barred by the statute of limitations under section 10 of the Outer Continental Shelf Lands Act.[6] Petitioner bases its request for waiver relative to leases owned by the State of Louisiana on grounds that the Louisiana State Minerals Board has adopted a resolution prohibiting producers from recovering Btu refund amounts attributable to state royalty payments by deductions from current royalty payments.

The procedures applicable to the conduct of this adjustment proceeding are found in Subpart K of the Commission's Rules of Practice and Procedure. Any person desiring to participate in this adjustment proceeding must file a motion to intervene in accordance with the provisions of such Subpart K. All motions to intervene must be filed within 15 days after publication of this notice in the **Federal Register**.

Kenneth F. Plumb,

Secretary.

[FR Doc. 87-272 Filed 1-6-87; 8:45 am]

BILLING CODE 6717-01-M

[Project No. 8314-005]

Town of Index, WA; Surrender of Preliminary Permit

January 2, 1987.

Take notice that the Town of Index, Washington, permittee for the proposed Deer Creek Project No. 8314, has requested that its preliminary permit be terminated. The preliminary permit was issued on December 24, 1984, and would have expired on November 30, 1987. The project would have been located on Deer Creek in Snohomish County, Washington.

The permittee filed the request on December 4, 1986, and the preliminary permit for Project No. 8314 shall remain in effect through the thirtieth day after issuance of this notice unless that day is a Saturday, Sunday or holiday as described in 18 CFR 385.2007, in which case the permit shall remain in effect through the first business day following that day. New applications involving this project site, to the extent provided for under 18 CFR Part 4, may be filed on the next business day.

Kenneth F. Plumb,

Secretary.

[FR Doc. 87-274 Filed 1-6-87; 8:45 am]

BILLING CODE 6717-01-M

[Docket No. SA87-33-000]

TXO Production Corp.; Petition for Adjustment

January 2, 1987.

On December 8, 1986, TXO Production Corporation (TXO) filed with the Federal Energy Regulatory Commission a petition for waiver pursuant to Order No. 399-A,[1] section 502(c) of the Natural Gas Policy Act of 1978,[2] and Subpart K of the Commission's Rules of Practice and Procedure.[3] Petitioner seeks a waiver of that portion of its Btu refund obligation under Order No. 399[4] attributable to the royalty intrest of Omni Exploration, Inc. (Omni) in certain wells located in Jackson County, Texas. Under Order No. 399-C,[5] these refunds are due 30 days after issuance of an order by the Commission or the Director of the Office of Pipeline and Producer Regulation disposing of the pending petition.

TXO bases its request for waiver on grounds that Omni has filed for a Chapter 11 reorganization in the U.S. Bankruptcy Court for the Eastern District of Pennsylvania. TXO states that the Bankruptcy Court has

---

[1] 18 CFR 385.214 and 385.211 (1986).

[1] 49 FR 46353 (November 26, 1984); FERC Stats. & Regs. [Regulations Preambles 1982-1985] ¶30,612

[2] 15 U.S.C. 3412(c) (1982).

[3] 18 CFR 385.1101 through 1117 (1986).

[4] 49 FR 37735 at 37,740 (September 26, 1984), FERC Stats. & Regs. [Regulations Preambles 1982-1985] ¶30,597 at p. 31,150. In Order No. 399, the Commission established refund procedures for charges for natural gas that exceeded NGPA ceilings as a result of Btu measurements based on the water vapor content of the gas "as delivered," rather than on a water saturated basis. In so doing, the Commission was implementing the decision in Interstate Natural Gas Association of America v. Federal Energy Regulatory Commission, 716 F.2d 1 (D.C. Cir. 1983), *cert. denied*, 465 U.S. 1108 (1984).

[5] In Order No. 399-C, issued November 5, 1986, the Commission postponed the November 5, 1986 deadline for payment of Btu refunds attributable to royalty payments for any first seller that has a petition on file with the Commission seeking waiver of or postponement of the deadline to pay Btu refunds attributable to royalty payments.

[6] 43 U.S.C. 1339 (1982).

[1] 49 FR 46353 (Nov. 26, 1984), FERC Stats. & Regs. [Regulations Preambles 1982-1985] ¶ 30,612.

[2] 15 U.S.C. 3412(c) (1982).

[3] 18 CFR 385.1101 through 385.1117 (1986).

[4] 49 FR 37735 (Sept. 26, 1984); FERC Stats. & Regs. [Regulation's Preambles 1982-1985] ¶ 30,597. In Order No. 399, the Commission established refund procedures for charges for natural gas above NGPA ceilings as a result of Btu measurements based on the water vapor content of the gas "as delivered," rather than on a water-saturated basis. In so doing, the Commission was implementing the decision in Interstate Natural Gas Association of America v. Federal Energy Regulatory Commission, 716 F.2d 1 (D.C. Cir. 1983), *cert. denied*, 465 U.S. 1108 (1984).

[5] 51 FR 41080 (Nov. 13, 1986), 37 FERC ¶ 61,091.

transferred Omni's oil and gas properties free and clear of any liens and encumbrances to a bank group, thus rendering that portion of TXO's Btu refund obligation attributable to Omni uncollectible.

The procedures applicable to the conduct of this adjustment proceeding are found in Subpart K of the Commission's Rules of Practice and Procedure. Any person desiring to participate in this adjustment proceeding must file a motion to intervene in accordance with the provisions of Subpart K. All motions to intervene must be filed within 15 days after publication of this notice in the **Federal Register.**

Kenneth F. Plumb,

Secretary.

[FR Doc. 87-273 Filed 1-6-87; 8:45 am]

BILLING CODE 6717-01-M

[Project No. 8216-002]

Upper San Joaquin River Water and Power Authority; Surrender of Preliminary Permit

January 2, 1987

Take notice that the Upper San Joaquin River Water and Power Authority, permittee for the Granite Creek Project No. 8216 located on the North Fork of the San Joaquin River, Granite Creek, Jackass Creek, and Chiquito Creek in Madera County, California, has requested that its preliminary permit be terminated. The preliminary permit was issued on December 31, 1985, and would have expired on November 30, 1988. The permittee states that analysis of the Granite Creek Project indicated that it was not economically feasible for development.

The permittee filed the request on December 1, 1986, and the preliminary permit for Project No. 8216 shall remain in effect through the thirtieth day after issuance of this notice unless that day is a Saturday, Sunday or holiday as described in 18 CFR 385.2007, in which case the permit shall remain in effect through the first business day following that day. New applications involving this project site, to the extent provided for under 18 CFR Part 4, may be filed on the next business day.

Kenneth F. Plumb,

Secretary.

[FR Doc. 87-275 Filed 1-6-87; 8:45 am]

BILLING CODE 6717-01-M

[Project Nos. 10158-000, et al.]

Hydroelectric Applications (R and D Power Co.) et al.; Applications Filed With the Commission

Take notice that the following hydroelectric applications have been filed with the Federal Energy Regulatory Commission and are available for public inspection:

1 a. Type of Application. Preliminary Permit.

b. Project No.: 10158-000.

c. Date Filed: October 31, 1986.

d. Applicant: R and D Power Company.

e. Name of Project: Northern California No. 2 Power Project.

f. Location: On Eagle Creek, near town of Trinity Center, within Shasta—Trinity National Forest, in Trinity County, California. (In Sections 8, 9, 16 and 21 of T38N, R7W, MDB&M.)

g. Filed Pursuant to: Federal Power Act, 16 U.S.C. 791(a)-825(r).

h. Contact Person: Mr. William D. Coldiron, Jr., P.O. Box 4254, Mountain View, CA 94040, (415) 969-9157.

i. Comment Date: January 22, 1987.

j. Competing Application: Project No. 10116-000, Date Filed: 10/06.86.

k. Description of Project: The proposed project would consist of: (1) A 4-foot-high, 40-foot-long diversion dam at elevation 3,250 feet m.s.l.; a 30-inch-diameter, 10,000-foot-long steel penstock, (3) a powerhouse with a total installed capacity of 950 kW operating under a head of 500 feet; and (4) a 5,000-foot-long, 12-kV transmission line from the powerhouse to an existing Pacific Gas and Electric Company (PG&E) transmission line. The applicant estimates the average annual energy generation at 2.9 GWh to be sold to PG&E. The applicant estimates that the cost of the work to be performed under the preliminary permit would be $29,000.00.

l. This notice also consists of the following standard paragraphs: A8, A10, B, C and D2.

2 a. Type of Application. Preliminary Permit.

b. Project No.: 10026.000.

c. Date Filed: July 1, 1986.

d. Applicant: Wayne County Water Conservancy District.

e. Name of Project: Fremont River Water Power Project.

f. Location: On Fremont River in Wayne County, Utah: Sections 2, 3, 4, 5, 6, 7, 8, 9, 10, 13, 14, 24, T29S, R4E; Sections 19, 20, 21, 22, 23, 24, 25, 26, 27, 28, 29, T29S, R5E; Sections 19, 30, T29S, R6E: SLB&M.

g. Filed Pursuant to: Federal Power Act, 16 U.S.C. 791(a)-825(r).

h. Contact Person: Dwight S. Williams, Teasdale, Utah 84773, Telephone: 801-425-3458.

i. Comment Date: February 13, 1987.

j. Description of Project: The proposed project would utilize lands in the Fishlake Naitonal Forest and lands administered by the U.S. Department of the Interior, Bureau of Land Management. Applicant proposes to study alternate schemes for developing the hydropower potential of a 12-mile reach of the Fremont River between elevations 6893 and 6052 feet (m.s.l.). The project may incorporate a 104-foot-high dam, a storage reservoir, a diversion dam and pumping station, penstocks up to 9 miles in length, a small powerhouse at the base of the high dam and a large one at the lower elevation. New transmission lines would connect the project to the existing lines of the Garkane Power Association, Inc. The Applicant estimates that with 8.1 MW of installed capacity the project's average annual energy production would be about 37,500,000 kWh. The Applicant estimates the cost of the studies under the permit at $139,500.

k. Purpose of Project: Project energy would be sold to the Garkane Power Association, Inc.

l. This notice also consists of the following standard paragraphs: A5, A7, A9, A10, B, C, D2.

3 a. Type of Application: Preliminary Permit.

b. Project No.: 10075-000.

c. Date Filed: September 2, 1986.

d. Applicant: Louis P. Migliozzi.

e. Name of Project: Holyoke Project.

f. Location: Holyoke Canal System in Hampden County, Massachusetts.

g. Filed Pursuant to: Federal Power Act, 16 U.S.C. 791(a)-825(r).

h. Contact Person: Mr. Louis P. Migliozzi, P.O. Drawer 2530, Holyoke, MA 01041, (617) 632-9009.

i. Comment Date: February 12, 1987.

j. Description of Project: The applicant proposes to utilize the existing unlicensed facility owned by the Xidex Corporation, Mountain View, California. The project retains water rights from the Holyoke Water Power Company, which owns and operates Project No. 2004.

The project would consist of: (1) An existing 22-foot-wide, 355-foot-long stone and concrete intake flume; (2) two existing 8-foot-diameter, 100-foot-long riveted iron penstocks; (3) an existing 39-foot-wide, 35-foot-long brick and timber powerhouse containing two (one existing, one proposed) generating units with a capacity of 175 kW each for a total installed capacity of 350 kW; (4) an existing 15-foot-wide, 50-foot-long wood tailrace; (5) an existing transmission

line; and (6) appurtenant facilities. The applicant estimates the average annual generation would be 1,500,000 kWh. The applicant estimates that the cost of the work to be performed under the preliminary permit would be $5,000.

k. Purpose of Project: Project power would be sold to either the Western Massachusetts Electric Company or the Massachusetts Municipal Wholesale Electric Company.

l. This notice also consists of the following standard paragraphs: A5, A7, A9, A10, B, C, and D2.

4 a. Type of Application: Preliminary Permit.

b. Project No.: P-10118-000.

c. Date Filed: October 9, 1986.

d. Applicant: Southern Connecticut Hydro.

e. Name of Project: Bunnell's Pond.

f. Location: On the Pequonnock River in Fairfield County, Connecticut.

g. Filed Pursuant to: Federal Power Act, 16 U.S.C. 791(a)-825(r).

h. Contact Person: Mr. Stefan M. Abelin, 42 Rexview Circle, Trumbull, Ct 06611, (203) 452-0754.

i. Comment Date: February 5, 1987.

j. Description of Project: The proposed project would consist of: (1) An existing 20-foot-high and 100-foot-long concrete dam with an existing spillway at elevation 26 feet msl owned by the City of Bridgeport; (2) an existing 14-acre surface area reservoir with a storage capacity of 150 acre-feet with a maximum surface elevation of 26 feet msl; (3) two new 4-foot-diameter penstocks approximately 50 feet long; (4) a proposed powerhouse to contain two new turbine/generators for a total installed capacity of 200 kW; (5) an existing 70-foot-wide tailrace which narrows down to 20 feet approximately 200 feet long; (6) a .6-kV transmission line approximately 2,500 feet long; and (7) appurtenant facilities.

The estimated average annual energy produced by the project would be about 1,200,000 kWh operating under a net hydraulic head of 19 feet. The Applicant estimates that the cost of the work to be performed under the preliminary permit would be $15,000.

k. Purpose of Project: Project power will be sold to the United Illuminating Company.

l. This notice also consists of the following standard paragraphs: A5, A7, A9, A10, B, C, and D2.

5 a. Type of Application: Preliminary Permit.

b. Project No.: 10190-000.

c. Date Filed: November 24, 1986.

d. Applicant: Saulk River Hydro.

e. Name of Project: Lower and Upper Dan Creek.

f. Location: In Snoqualmie-Mt. Baker National Forest, on Dan Creek, in Snohomish County, Washington. Township 32N and Range 10E.

g. Filed Pursuant to: Federal Power Act, 16 U.S.C. 791(a)-825(r).

h. Contact Person: Lawrence J. McMurtrey, Saulk River Hydro, 12122—196th N.E., Redmond, WA 98052, (206) 885-3986.

i. Comment Date: February 26, 1987.

j. Description of Project: The proposed project would consist of the following:

(A) The Lower Dan Creek Development would consist of: (1) A diversion structure with an inlet elevation of 1,400 feet msl; (2) a penstock 10,000 feet long and 48 inches in diameter leading to; (3) a powerplant at elevation 600 feet msl containing a single turbine/generator unit with a capacity of 5,832 kW operating at 800 feet of hydraulic head; and (4) a 1-mile-long, 115-kV transmission line.

(B) The Upper Dan Creek Develoment would consist of: (1) a diversion structure with an inlet elevation of 2,400 feet msl; (2) a penstock 16,000 feet long and 30 inches in diameter leading to; (3) a powerplant at elevation 1,400 feet msl containing a single turbine/generator unit with a capacity of 2,270 kW operating at 1,000 feet of hydraulic head; and (4) a 3-mile-long, 115-kV transmission line.

The applicant estimates the average annual energy production to be 35.46 GWh. The approximate cost of the studies under the permit would be $40,000.

k. Purpose of Project: Applicant proposes to sell the power generated at the proposed facility.

l. This notice also consists of the following standard paragraphs: A5, A7, A9, A10, B, C, and D2.

6 a. Type of Application: Preliminary Permit.

b. Project No.: 10173-000.

c. Date Filed: November 19, 1986.

d. Applicant: The City of Libby, Montana.

e. Name of Project: Jennings Rapids.

f. Location: On the Kootenai River in T30N, R29W, near Libby, in Lincoln County, Montana.

g. Filed Pursuant to: Federal Power Act, 16 U.S.C. 791(a)-825(r).

h. Contact Person: Mr. Fred Brown, Mayor, P.O. Box Z, Libby, MT 59923, (406) 293-2731.

i. Comment Date: March 6, 1987.

j. Description of Project: The proposed project would consist of: (1) A dam consisting of an earth and rock-fill embankment section, a concrete spillway and an integral powerhouse section; (2) a 1,450-acre reservoir with a storage capacity of 37,500 acre-feet at a normal reservoir surface elevation of 2,130 feet; (3) a powerhouse containing one generating unit with a rated capacity of 55,000 kW; and (4) a 1-mile-long transmission line. Applicant estimates the average annual energy production to be 300,000,000 kWh per year. The applicant estimates that the cost of the work to be performed under the preliminary permit would be $700,000.

k. Purpose of Project: The power produced is to be sold to the local power company.

l. This notice also consists of the following standard paragraphs: A5, A7, A9, A10, B, C and D2.

7 a. Type of Application: Preliminary Permit.

b. Project No.: 10180-000.

c. Date Filed: November 24, 1986.

d. Applicant: A & J Construction, Inc.

e. Name of Project: Deep Creek Hydropower.

f. Location: On Deep Creek, within Payette National Forest in Adams County, Idaho. Township 22 North, Range 3 West, Boise Meridian.

g. Filed Pursuant to: Federal Power Act, 16 U.S.C. 791(a)-825(r).

h. Contact Person: Mr. Carl L. Myers, 750 Warm Springs Avenue, Boise, ID 83712, (208) 336-1425.

i. Comment Date: March 6, 1987.

j. Description of Project: The proposed project would consist of: (1) 2-foot-high diversion dams at elevation 2,400 feet on Oxbow and Deep Creeks; (2) a 30-inch-diameter buried steel penstock totalling 10,000 feet in length; (3) a 500-square-foot concrete powerhouse at elevation 1,520 feet containing a generating unit rated at 1,646 kW, producing an average annual output of 8.6 GWh; and (4) a 0.25-mile-long buried transmission line connecting to the substation at Hells Canyon Dam. The estimated cost of permit activities is $60,000.

k. Purpose of Project: Project power would be sold.

l. This notice also consists of the following standard paragraphs: A5, A7, A9, A10, B, C, and D2.

8 a. Type of Application: Transfer of License.

b. Project No.: 6972-002.

c. Date Filed: November 12, 1986.

d. Applicant: Power Resources Development Corporation (Licensee) and Hollow Dam Power Company (Transferee).

e. Name of Project: Hollow Dam.

f. Location: On the West Branch of the Oswegatchie River in St. Lawrence County, New York.

g. Filed Pursuant to: Federal Power Act, 16 U.S.C. 791(a)-825(r).

h. Contact Person: Ralph K. Merzbach, Esq, Woods, Oviatt, Gilman, Sturman & Clarke, 44 Exchange Street, Rochester, NY 14614, (716) 454–5370.

i. Comment Date: February 13, 1987.

j. Description of Project: Power Resources Development Corporation (Licensee) filed an application to transfer its license to Hollow Dam Power Company (Transferee). The Licensee is a general partner of the Transferee and will maintain a substantial interest in the development and operation of the project. The purpose of the transfer is to facilitate the financing and construction of the project through a traditional partnership structure.

The proposed transfer would not result in any changes in the proposed development. The Transferee accepts all the terms and conditions of the license and the Federal Power Act, and agrees to be bound thereby to the same extent as though it were the original licensee.

k. This notice also consists of the following standard paragraphs: B and C.

9 a. Type of Application: License (Under 5 MW).

b. Project No.: 7660–001.

c. Date Filed: October 9, 1986.

d. Applicant: Borough of Point Marion, Pennsylvania and Noah Corporation.

e. Name of Project: Point Marion Lock and Dam.

f. Location: On the Monongahela River in Fayette County, Pennsylvania.

g. Filed Pursuant: Federal Power Act, 16 U.S.C. 791(a)–825(r).

h. Contact Person: Mr. William Ross, President, Borough of Point Marion, Point Marion Borough Building, Point Marion, Pennsylvania 15474

Mr. James B. Price, President, Noah Corporation, 120 Calumet Ct., Aiken, SC 29801

i. Comment Date: March 5, 1987.

j. Description of Project: The proposed project will utilize the existing U.S. Army Corps of Engineers' Point Marion Lock and Dam and consist of: (1) A proposed powerhouse to contain an installed generating capacity of 5 MW; (2) a proposed one-mile-long, 25-kV transmission line to be overbuilt onto existing West Penn Power Company Poles; and (3) appurtenant facilities. The Applicant estimates that the average annual energy generation to be 22.5 GWh.

k. Purpose of Project: The Applicant intends to sell all power produced to Allegheny Power System or an interconnected utility.

l. This notice also consists of the following standard paragraphs: A3, A9, B, C and D1.

10 a. Type of Application: Minor License.

b. Project No.: 9399–002.

c. Date Filed: July 31, 1986.

d. Applicant: Orange Cove Irrigation District.

e. Name of Project: Kings River Siphon Hydroelectric Project.

f. Location: On the United States Bureau of Reclamation's Friant-Kern Canal in Fresno County, California, in Section 26, T13S, R23E, M.D.M.&B.

g. Filed Pursuant to: Federal Power Act, 16 U.S.C. 791(a)–825(r).

h. Contact Person: Mr. James Chandler, Orange Cove Irrigation District, 1130 Park Blvd., P.O. Box 308, Orange Cove, CA 93646, (209) 626–4461.

i. Comment Date: March 9, 1987.

j. Description of Project: The proposed project would utilize the existing Friant-Kern Canal and would consist of two rectangular reinforced concrete structures located on each side of the canal at invert elevation 4,340 feet msl conveying water to two Leroy Somers turbine/generator units rated at 400 kW each, operating under an average head of 11 feet and returning flows to the canal. A new 1,000-foot-long, 12-kV transmission line would interconnect the project with an existing Pacific Gas and Electric Company transmission line. The project would generate an average annual output of 3.4 GWh.

k. Purpose of Project: Project power will be sold to Pacific Gas and Electric Company.

l. This notice also consists of the following standard paragraphs: A3, A9, B, C, and D1.

11 a. Type of Application: Conduit Exemption.

b. Project No.: 10085–000.

c. Date Filed: September 16, 1986.

d. Applicant: City of Banning.

e. Name of Project: San Gorgonio Upper Basin.

f. Location: On the City of Banning Water Supply System in the San Gorgonio Canyon in Riverside County, California.

g. Filed Pursuant to: Section 408 of the Act of 1980 (16 U.S.C. 2705 and 2708 as amended).

h. Contact Person: Eldridge W. Sinclair, Public Utilities, Director, P.O. Box 998, 176 East Lincoln, Banning, CA 92220, (714) 849–4511 (Ext. 43).

i. Comment Date: February 17, 1987.

j. Description of Project: The proposed project would consist of a new turbine-generator unit with an installed capacity of 350 kW at Well #7 of the City of Banning Water Supply System and a 4,160-volt transmission line from Well #7 to Well #1. Applicant estimates an average annual generation of 2,180,000 kWh.

Purpose of Exemption—An exemption, if issued, gives an exemptee priority of control, development, and operation of the project under the term of the exemption from licensing, and protects the exemptee from permit or license applicants that would seek to take or develop the project.

k. Purpose of Project: Project power would be used by the applicant.

l. This notice also consists of the following standard paragraphs: A3, A9, B, C, and D3b.

12 a. Type of Application: Preliminary Permit.

b. Project No.: 10145–000.

c. Date Filed: October 30, 1986.

d. Applicant: Skykomish River Hydro.

e. Name of Project: Lowe Creek Project.

f. Location: In Snoqualmie—Mt. Baker National Forest, on Lowe Creek, King County, Washington. Township 26N and Range 10E.

g. Filed Pursuant to: Federal Power Act, 16 U.S.C. 791(a)–825(r).

h. Contact Person: Mr. Lawrence J. McMurtrey, 12122—196th N.E., Redmond, WA 98052, (206) 885–3986.

i. Comment Date: March 5, 1987.

j. Description of Project: The proposed project would consist of: (1) A concrete diversion structure 18-inches wide with an inlet elevation of 2,400 feet msl; (2) a penstock 6,000 feet long and 18-inches in diameter leading to; (3) a powerplant at elevation 1,000 feet msl containing a single turbine/generator unit with a capacity of 1,720 kW operating at 1,400 feet of hydraulic head; and (4) a one-mile-long, 115-kV transmission line. The applicant estimates the average annual energy production to be 7.57 GWh. The approximate cost of the studies under the permit would be $40,000.

k. Purpose of Project: Applicant intends to sell the power generated at the proposed facility to Puget Sound Power and Light Company, Snohomish County PUD, BPA or Tacoma Light.

l. This notice also consists of the following standard paragraphs: A5, A7, A9, A10, B, C, & D2.

13 a. Type of Application: Preliminary Permit.

b. Project No.: 10188–000.

c. Date Filed: November 24, 1986.

d. Applicant: Stillaguamish River Hydro.

e. Name of Project: French Creek Project.

f. Location: In Snoqualmie—Mt. Baker National Forest, on French Creek, in Snohomish County, Washington. Township 31N and Range 8E.

g. Filed Pursuant to: Federal Power Act, 16 U.S.C. 791(a)–825(r).

h. Contact Person: Mr. Lawrence J. McMurtrey, Stillaguamish River Hydro,

12122—196th N.E., Redmond, WA 98052, (206) 885-3986.

i. Comment Date: March 5, 1987.

j. Description of Project: The proposed project would consist of: (1) A diversion structure with an inlet elevation of 2,400 feet msl; (2) a penstock 9,896 feet long and 24 inches in diameter leading to; (3) a powerplant at elevation 800 feet msl containing a single turbine/generator unit with a capacity of 2,300 kW operating at 1,600 feet of hydraulic head; and (4) a 2-mile-long, 115-kV transmission line. The applicant estimates the average annual energy production to be 12.24 GWh. The approximate cost of the studies under the permit would be $40,000.

k. Purpose of Project: Applicant proposes to sell the power generated at the proposed facility.

l. This notice also consists of the following standard paragraphs: A5, A7, A9, A10, B, C, & D2.

Standard Paragraphs

A3. Development Application

Any qualified development applicant desiring to file a competing application must submit to the Commission, on or before the specified comment date for the particular application, a competing development application, or a notice of intent to file such an application. Submission of a timely notice of intent allows an interested person to file the competing development application no later than 120 days after the specified comment date for the particular application. Applications for preliminary permit will not be accepted in response to this notice.

A4. Development Application

Public notice of the filing of the initial development application, which has already been given, established the due date for filing competing applications or notices of intent. In accordance with the Commission's regulations, any competing development applications or notices of intent to file competing development applications, must be filed in response to and in compliance with the public notice of the initial development application. No competing applications or notices of intent may be filed in response to this notice.

A5. Preliminary Permit

Anyone desiring to file a competing application for preliminary permit for a proposed project must submit the competing application itself, or a notice of intent to file such an application, to the Commission on or before the specified comment date for the particular application (see 18 CFR 4.36 (1985)). Submission of a timely notice of intent allows an interested person to file the competing preliminary permit application no later than 30 days after the specified comment date for the particular application.

A competing preliminary permit application must conform with 18 CFR 4.30(b) (1) and (9) and 4.36.

A7. Preliminary Permit

Any qualified development applicant desiring to file a competing development application must submit to the Commission, on or before the specified comment date for the particular application, either a competing development application or a notice of intent to file such an application. Submission of a timely notice of intent to file a development application allows an interested person to file the competing application no later than 120 days after the specified comment date for the particular application.

A competing license application must conform with 18 CFR 4.30(b)(1) and (9) and 4.36.

A8. Preliminary Permit

Public notice of the filing of the initial preliminary permit application, which has already been given, established the due date for filing competing preliminary permit and development applications or notices of intent. Any competing preliminary permit or development application, or notice of intent to file a competing preliminary permit or development application, must be filed in response to and in compliance with the public notice of the initial preliminary permit application. No competing applications or notices of intent to file competing applications may be filed in response to this notice.

A competing license application must conform with 18 CFR 4.30(b)(1) and (9) and 4.36.

A9. Notice of intent

A notice of intent must specify the exact name, business address, and telephone number of the prospective applicant, include an unequivocal statement of intent to submit, if such an application may be filed, either (1) a preliminary permit application or (2) a development application (specify which type of application), and be served on the applicant(s) named in this public notice.

A10. Proposed Scope of Studies Under Permit

A preliminary permit, if issued, does not authorize construction. The term of the proposed preliminary permit would be 36 months. The work proposed under the preliminary permit would include economic analysis, preparation of preliminary engineering plans, and a study of environmental impacts. Based on the results of these studies the Applicant would decide whether to proceed with the preparation of a development application to construct and operate the project.

B. Comments, Protests, or Motions to Intervene

Anyone may submit comments, a protest, or a motion to intervene in accordance with the requirements of the Rules of Practice and Procedure, 18 CFR 385.210, 385.211, 385.214. In determining the appropriate action to take, the Commission will consider all protests or other comments filed, but only those who file a motion to intervene in accordance with the Commission's Rules may become a party to the proceeding. Any comments, protests, or motions to intervene must be received on or before the specified comment date for the particular application.

C. Filing and Service of Responsive Documents

Any filings must bear in all capital letters the title "COMMENTS", "NOTICE OF INTENT TO FILE COMPETING APPLICATION", "COMPETING APPLICATION", "PROTEST" or "MOTION TO INTERVENE", as applicable, and the Project Number of the particular application to which the filing is in response. Any of the above named documents must be filed by providing the original and the number of copies required by the Commission's regulations to: Kenneth F. Plumb, Secretary, Federal Energy Regulatory Commission, 825 North Capitol Street NE., Washington, DC 20426. An additional copy must be sent to: Mr. Fred E. Springer, Director, Division of Project Management, Federal Energy Regulatory Commission, Room 203-RB, at the above address. A copy of any notice of intent, competing application or motion to intervene must also be served upon each representative of the Applicant specified in the particular application.

D1. Agency Comments

Federal, State, and local agencies that receive this notice through direct mailing from the Commission are requested to provide comments pursuant to the Federal Power Act, the Fish and Wildlife Coordination Act, the Endangered Species Act, the National Historic Preservation Act, the Historical and Archeological Preservation Act, the

National Environmental Policy Act, Pub. L. 88-29, and other applicable statutes. No other formal requests for comments will be made.

Comments should be confined to substantive issues relevant to the issuance of a license. A copy of the application may be obtained directly from the Applicant. If an agency does not file comments with the Commission within the time set for filing comments, it will be presumed to have no comments. One copy of an agency's comments must also be sent to the Applicants representatives.

D2. Agency Comments

Federal, State, and local agencies are invited to file comments on the described application. (A copy of the application may be obtained by agencies directly from the Applicant.) If an agency does not file comments within the time specified for filing comments, it will be presumed to have no comments. One copy of an agency's comments must also be sent to the Applicant's representatives.

D3a. Agency Comments

The U.S. Fish and Wildlife Service and the State Fish and Game agency(ies) are requested, for the purposes set forth in section 408 of the Energy Security Act of 1980, to file within 60 days from the date of issuance of this notice appropriate terms and conditions to protect any fish and wildlife resources or to otherwise carry out the provisions of the Fish and Wildlife Coordination Act. General comments concerning the project and its resources are requested; however, specific terms and conditions to be included as a condition of exemption must be clearly identified in the agency letter. If an agency does not file terms and conditions within this time period, that agency will be presumed to have none. Other Federal, State, and local agencies are requested to provide any comments they may have in accordance with their duties and responsibilities. No other formal requests for comments will be made. Comments should be confined to substantive issues relevant to the granting of an exemption. If an agency does not file comments within 60 days from the date of issuance of this notice, it will be presumed to have no comments. One copy of an agency's comments must also be sent to the Applicant's representatives.

D3b. Agency Comments

The U.S. Fish and Wildlife Service and the State Fish and Game agency(ies) are requested, for the purposes set forth in section 30 of the Federal Power Act, to file within 45 days from the date of issuance of this notice appropriate terms and conditions to protect any fish and wildlife resources or otherwise carry out the provisions of the Fish and Wildlife Coordination Act. General comments concerning the project and its resources are requested; however, specific terms and conditions to be included as a condition of exemption must be clearly identified in the agency letter. If an agency does not file terms and conditions within this time period, that agency will be presumed to have none. Other Federal, State, and local agencies are requested to provide comments they may have in accordance with their duties and responsibilities. No other formal requests for comments will be made. Comments should be confined to substantive issues relevant to the granting of an exemption. If an agency does not file comments within 45 days from the date of issuance of this notice, it will be presumed to have no comments. One copy of an agency's comments must also be sent to the Applicant's representatives.

Dated: December 31, 1986, Washington, DC.

Kenneth F. Plumb,

Secretary.

[FR Doc. 87-265 Filed 1-6-87; 8:45 am]

BILLING CODE 6717-01-M

[Docket Nos. CP87-120-000 et al.]

Natural Gas Certificate Filings; Southern Natural Gas Co. et al.

December 31, 1986.

Take notice that the followings filings have been made with the Commission:

1. Southern Natural Gas Co.

[Docket No. CP87-120-000]

Take notice that on December 9, 1986, Southern Natural Gas Company (Southern), P.O. Box 2563, Birmingham, Alabama 35202, filed in Docket No. CP87-120-000 an application pursuant to section 7(c) of the Natural Gas Act for a limited-term certificate authorizing the transportation of natural gas for the City of Phenix City, Alabama (Phenix City), acting as agent for Southern Phenix Textiles, Inc. (SPT), all as more fully set forth in the application which is on file with the Commission and open to public inspection.

Southern proposes to transport up to 2.5 billion Btu equivalent of natural gas per day for Phenix City, acting as agent for SPT, on an interruptible basis, for a one-year term. It is indicated that SPT would purchase the gas from SNG Trading, Inc. Southern states that it would receive the gas for the account of SPT at various existing points onshore and offshore Louisiana. Southern proposes to redeliver equivalent volumes of gas, less 3.25 percent for compressor fuel and company-use gas, and less Phenix City's pro-rata share of any gas delivered for Phenix City's account which is lost or vented, at existing delivery points to Phenix City in Alabama for use in SPT's plant.

Southern proposes to charge Phenix City a transportation rate of 39.9 cents per million Btu equivalent where the aggregate of the volumes transported by Southern for Phenix City under any and all transportation agreements between Southern and Phenix City, when added to the volumes of gas delivered under Southern's Rate Schedule OCD, does not exceed Phenix City's daily contract demand from Southern. For those volumes that exceed Phenix City's daily contract demand, Southern proposes to charge 64.9 cents per million Btu equivalent. In addition Southern proposes to collect the GRI surcharge of 1.35 cents per Mcf.

It is asserted that Southern would obtain take-or-pay credit for all volumes of gas transported.

Comment date: January 21, 1987, in accordance with Standard Paragraph F at the end of this notice.

2. Columbia Gulf Transmission Co.

[Docket No. CP77-521-003]

Take notice that on December 5, 1986, Columbia Gulf Transmission Company (Columbia Gulf), P.O. Box 683, Houston, Texas 77001, filed in Docket No. CP77-521-003 a petition to amend the order issued in Docket No. CP77-521, on September 22, 1977, pursuant to section 7(c) of the Natural Gas Act so as to authorize the transportation of gas for Texas Eastern Transmission Company (Texas Eastern) from West Cameron Block 648, offshore Louisiana, all as more fully set forth in the petition to amend which is on file with the Commission and open to public inspection.

Columbia Gulf states that it is authorized, by order issued September 22, 1977, in Docket No. CP77-521, to transport a contract demand volume of 90,000 Mcf per day of gas available to Texas Eastern from West Cameron Blocks 620 and 606, offshore Louisiana. Such gas, it is said, is transported from a point of receipt in West Cameron Block 606, offshore Louisiana, to the point of delivery in West Cameron Block 601, offshore Louisiana.

Columbia Gulf now requests the Commission to authorize the transportation, as part of the presently

authorized contract demand volumes, of Texas Eastern's West Cameron Block 648 volumes. It is said that Texas Eastern would deliver this gas to Columbia Gulf at the point of receipt in West Cameron Block 606 for redelivery by Columbia Gulf at point of delivery in West Cameron Block 601.

Comment date: January 21, 1987, in accordance with the first subparagraph of Standard Paragraph F at the end of this notice.

3. Arkla Energy Resources, a Division of Arkla, Inc.

[Docket No. CP87-121-000]

Take notice that on December 10, 1986, Arkla Energy Resources, a division of Arkla, Inc. (Arkla), 525 Milam Street, P.O. Box 21734, Shreveport, Louisiana 71151, filed in Docket No. CP87-121-000 a request pursuant to § 157.205 of the Regulations under the Natural Gas Act for authorization to construct and operate two taps and related jurisdictional facilities necessary to deliver gas to residential customers served by Arkansas Louisiana Gas Company (ALG), a division of Arkla, Inc., under the certificate issued in Docket Nos. CP82-384-000 and CP82-384-001 pursuant to section 7 of the Natural Gas Act, all as more fully set forth in the request which is on file with the Commission and open to public inspection.

Arkla proposes to construct and operate a tap in Crittenden County, Arkansas at an estimate cost of $9,540 to deliver gas to ALG for ultimate distribution to residential customers. Arkla estimates that these customers would use approximately 1,400 Mcf per year and 8 Mcf on a peak day.

Arkla also proposes to construct and operate a tap in Cowley County, Kansas at an estimated cost of $2,035 to deliver gas to ALG for resale to a domestic customer. It is estimated that the customer would use approximately 140 Mcf per year and about 2 Mcf on a peak day.

Arkla states that the gas would be delivered from its general system supply, which it is stated is adequte to provide the service.

Comment date: February 17, 1987, in accordance with Standard Paragraph G at the end of this notice.

4. Northwest Central Pipeline Corp.

[Docket No. CP87-133-000]

Take notice that on December 18, 1986, Northwest Central Pipeline Corporation (Northwest Central), P. O. Box 3288, Tulsa, Oklahoma 74101, filed in Docket No. CP87-133-000 an application pursuant to section 7 of the Natural Gas Act for a certificate of public convenience and necessity authorizing the installation of compression facilities in Creek County, Oklahoma; the construction of approximately 17.2 miles of 12-inch pipeline in Osage and Washington Counties, Oklahoma; the replacement of approximately 14.1 miles of 16- and 18-inch pipeline in Washington County, Oklahoma, and Montgomery County, Kansas; and the abandonment of compression facilities in Creek County, Oklahoma, all as more fully set forth in the application which is on file with the Commission and open to public inspection.

Specifically, Northwest Central seeks authority to replace four obsolete 1000 horsepower horizontal compressor units and appurtenant facilities with three 800 horsepower compressor units and appurtenant facilities; construct approximately 17.2 miles of 12-inch pipeline, and replace approximately 14.1 miles of 16- and 18-inch pipeline with 16-inch pipeline. The proposals herein would allegedly enable Northwest Central to more efficiently meet the changing operating conditions on its pipeline system and provide for future automation of its compressor stations.

Northwest Central states that the estimated cost of the proposed facilities is $8,656,000, which would be paid from treasury cash. It is asserted that the total cost for the proposed abandonment is $205,000 with an estimated salvage value of $168,000.

Comment date: January 21, 1987, in accordance with Standard Paragraph F at the end of this notice.

5. Southern Natural Gas Co.

[Docket No. CP87-119-000]

Take notice that on December 9, 1986, Southern Natural Gas Company (Southern), P.O. Box 2563, Birmingham, Alabama, 35202-2563, filed in Docket No. CP87-119-000 an application pursuant to section 7 of the Natural Gas Act for permission and approval to abandon one compressor unit and for a certificate of public convenience and necessity authorizing the installation of compression facilities at Southern's Gallion Compressor Station in Hale County, Alabama (Gallion), all as more fully set forth in the application which is on file with the Commission and open to public inspection.

Southern proposes to abandon one 2,500 horsepower turbine-driven compressor unit located at Gallion. Southern states that this unit has become obsolete and is in need of replacement in order for its system to run more efficiently and reliably. Southern further requests a certificate of public convenience and necessity authorizing the construction, installation and operation of a reciprocating compressor unit at Gallion.

Southern proposes to install a 4,000 horsepower reciprocating compressor unit as a replacement for the proposed abandoned unit. The incremental 1,500 horsepower would be used to provide standby horsepower at Gallion, which is one of Southern's largest compressor stations on its transmission system, it is stated.

Southern states that this standby horsepower is necessary since six of the eight compressor units at the station were installed before 1960, and because no backup horsepower is available to maintain daily design capacity at Gallion if one of these older units malfunctions. Southern submits that it is more economical to include the incremental standby horsepower now as a part of the system replacement since the installation of the proposed reciprocating unit would improve the operational efficiency and reliability of its system and would avoid future additional expenditures that would be required if the standby horsepower was installed separately. The installation of the reciprocating unit at the proposed location would not reduce the capacity of Southern's pipeline system or require termination of any service to Southern customers, Southern indicated.

Southern states that the estimated cost of the proposed facilities is $4,421,000, which is expected to be financed initially by short-term financing and/or cash from current operations.

Comment date: January 21, 1986, in accordance with Standard Paragraph F at the end of this notice.

Standard Paragraphs

F. Any person desiring to be heard or make any protest with reference to said filing should on or before the comment date file with the Federal Energy Regulatory Commission, 825 North Capitol Street, NE., Washington, DC 20426, a motion to intervene or a protest in accordance with the requirements of the Commission's Rules or Practice and Procedure (18 CFR 385.211 and 385.214) and the Regulations under the Natural Gas Act (18 CFR 157.10). All protests filed with the Commission will be considered by it in determining the appropriate action to be taken but will not serve to make the protestants parties to the proceeding. Any person wishing to become a party to a proceeding or to participate as a party in any hearing therein must file a motion to

intervene in accordance with the Commission's Rules.

Take further notice that, pursuant to the authority contained in and subject to jurisdiction conferred upon the Federal Energy Regulatory Commission by sections 7 and 15 of the Natural Gas Act and the Commission's Rules of Practice and Procedure, a hearing will be held without further notice before the Commission or its designee on this filing if no motion to intervene is filed within the time required herein, if the Commission on its own review of the matter finds that a grant of the certificate is required by the public convenience and necessity. If a motion for leave to intervene is timely filed, or if the Commission on its own motion believes that a formal hearing is required, further notice of such hearing will be duly given.

Under the procedure herein provided for, unless otherwise advised, it will be unnecessary for the applicant to appear or be represented at the hearing.

G. Any person or the Commission's staff may, within 45 days after the issuance of the instant notice by the Commission, file pursuant to Rule 214 of the Commission's Procedural Rules (18 CFR 385.214) a motion to intervene or notice of intervention and pursuant to § 157.205 of the Regulations under the Natural Gas Act (18 CFR 157.205) a protest to the request. If no protest is filed within the time allowed therefor, the proposed activity shall be deemed to be authorized effective the day after the time allowed for filing a protest. If a protest is filed and not withdrawn within 30 days after the time allowed for filing a protest, the instant request shall be treated as an application for authorization pursuant to section 7 of the Natural Gas Act.

Kenneth F. Plumb,

Secretary.

[FR Doc. 87-283 Filed 1-6-87; 8:45 am]

BILLING CODE 6717-01-M

[Docket No. G-12015-000 et al.]

The George R. Brown Partnership; Application

December 31, 1986.

Take notice that on December 9, 1986, The George R. Brown Partnership (Brown Partnership) of 4700 First City Tower Building, 1001 Fannin Street, Houston, Texas 77002-6708, filed an application pursuant to and in accordance with the provisions of section 7 of the Natural Gas Act (NGA), as amended, and the Rules and Regulations of the Federal Energy Regulatory Commission (Commission) issued thereunder, for permission and approval to continue the sale of natural gas in interstate commerce to those purchasers listed on the attached Exhibit "A" as successor-in-interest to George R. Brown (Brown), deceased, Cryogen, Inc. (Cryogen), and Highland Resources, Inc. (Highland) and for redesignation of rate schedules as shown on the attached Exhibit "A", which is on file with the Commission and open to public inspection.

By Act of Sale effective January 22, 1983, the legatees under the Will of George R. Brown, Deceased, conveyed all right, title and interest in and to certain properties to Cryogen, Inc. George R. Brown died testate on January 22, 1983. Alice Pratt Brown, individually and as Independent Executrix of the Estate of George R. Brown, Deceased, conveyed all right, title and interest in certain other properties to the Brown Partnership and Cryogen, Inc. by Assignments effective April 1, 1983 and February 1, 1984, respectively. Effective November 1, 1984, the properties which has been assigned to Cryogen, Inc. were assigned by Cryogen to the Brown Partnership. Effective December 31, 1985, Highland assigned all its rights, title and interest in and to its properties to the Brown Partnership.

Any person desiring to be heard or to make any protest with reference to said applications should on or before January 15, 1987, file with the Federal Energy Regulatory Commission, Washington, DC 20426, a petition to intervene or a protest in accordance with the requirements of the Commission's Rules of Practice and Procedure (18 CFR 385.211, 385.214). All protests filed with the Commission will be considered by it in determining the appropriate action to be taken but will not serve to make the protestants parties to the proceeding. Any person wishing to become a party in any proceeding herein must file a petition to intervene in accordance with the Commission's rules.

Under the procedure herein provided for, unless otherwise advised, it will be unnecessary for Applicant to appear or to be represented at the hearing.

Kenneth F. Plumb,

Secretary.

EXHIBIT A TO GEORGE R. BROWN PARTNERSHIP APPLICATION FOR CERTIFICATES OF PUBLIC CONVENIENCE AND NECESSITY AS SUCCESSOR IN INTEREST TO GEORGE R. BROWN, CRYOGEN, INC., AND HIGHLAND RESOURCES, INC.

Exhibit No.	Assignor	Effective date of assignment	FERC Cert. docket No.	Current FERC gas rate schedule No.	Purchaser	Contract date	Property	Proposed rate schedule designation No.
A-1	G.R. Brown	2/1/84	G-12015	17	Colorado Interstate Gas Co.	1/11/57	SW/4, Section 28, SW/4, Section 20, SW/4, Section 21, Keyes Field, Cimarron Cty., OK	[1] 4
A-2	Cryogen [2]	10/31/84	G-8751	2	Arkansas Louisiana Gas Co.	2/24/76	SE Mayfield Field, Beckham Cty., OK	5
A-3	Cryogen [3]	11/1/84	CI 60-580	3	United Gas Pipe Line Co.	6/10/80	Abbeville Field, Vermilion Parish, LA	6
A-4	HRI [4]	12/31/85	CI 68-649	[5] 6	Texan Eastern Transmission.	7/19/72	Brushy Creek Field, DeWitt/Lavace Cty's., TX	7
A-5	HRI [4]	12/31/85	CI 68-917	7	ANR Pipeline Co., successor to Michigan-Wisconsin PL Co.	1/2/68	Ship Shoal Area, Blocks 204, 207, 216, Offshore LA, OCS	8

EXHIBIT A TO GEORGE R. BROWN PARTNERSHIP APPLICATION FOR CERTIFICATES OF PUBLIC CONVENIENCE AND NECESSITY AS SUCCESSOR IN INTEREST TO GEORGE R. BROWN, CRYOGEN, INC., AND HIGHLAND RESOURCES, INC.—Continued

Exhibit No.	Assignor	Effective date of assignment	FERC Cert. docket No.	Current FERC gas rate schedule No.	Purchaser	Contract date	Property	Proposed rate schedule designation No.
A-6	HRI [4]	12/31/85	CI 72-583	10	do	9/3/71	Eugene Island Area, Block 296, Offshore LA, OCS	9
A-7	HRI [4]	12/31/85	CI 65-997	12	do	9/27/72	Eugene Island Area, Block 306, Offshore LA, OCS	10
A-8	HRI [4]	12/31/85	CI 65-733	13	Trunkline Gas Co	5/31/74	S. Marsh Island Area, Blocks 268, 269, 281, Offshore LA, OCS	11
A-9	HRI [4]	12/31/85	CI 65-261	14	ANR Pipeline Co., successor to Michigan-Wisconsin PL C..	1/26/77	Ship Shoal Area, Blocks 290, 291, Offshore LA, OCS	12
A-10	HRI [4]	12/31/85	CI 77-165	15	do	12/3/76	Eugene Island Area, Block 296 (X & 10 Sand Reservoirs) Offshore LA, OCS	13
A-11	HRI [4]	12/31/85	CI 78-7	16	Colorado Interstate Gas Co.	6/20/74	Natural Buttes Unit Area, Uintah Cty., UT	14

[1] Next numerical designation. Succession documents previously filed by George R. Brown Partnership ("GRBP") and Rate Schedules designated as GRBP Rate Schedules Nos. 1, 2 and 3.

[2] Properties conveyed to Cryogen Inc. by Alice Pratt Brown, as Executrix of Estate of George R. Brown, deceased. Succession application approved by FERC Order issued 6/18/84 in Docket G-8751-000, et al. Rate Schedule designated Cryogen R/S No. 2.

[3] Properties conveyed to Cryogen Inc. by Brown legatees under Act of Sale effective 1/22/83. Succession application approved by FERC Order issued 6/13/84 in Docket 60-580-000, et al. Rate Schedule designated as Cryogen R/S No. 3.

[4] Properties conveved by Highland Resources, Inc. ("HRI") to George R. Brown Partnership effective 12/31/85.

[5] Concurrently herewith, GRBP as successor-in-interest to HRI's R/S No. 6 in filing the 9/28/78 Lacy et al. Ratification of the 7/19/72 gas purchase contract as a supplement to its rate schedule.

[FR Doc. 87-266 Filed 1-6-87; 8:45 am]

BILLING CODE 6717-01-M

[Docket No. GP87-16-000]

Yukon Pacific Corp.; Petition for Declaratory Order

December 30, 1986.

Take notice that on December 19, 1986, Yukon Pacific Corporation (Yukon Pacific), P.O. Box 101700, Anchorage, Alaska 99510, filed in docket No. GP87-16-000 a petition for a declaratory order requesting that the Commission determine whether it has jurisdiction under sections 3 and 7 of the Natural Gas Act over the siting, construction, maintenance, and operation of Yukon Pacific's proposed natural gas transportation and liquefaction facilities, all as more fully described in the petition on file with the Commission and open to public inspection.

In its petition, Yukon Pacific states that it is an investor-owned corporation organized under the laws of the State of Alaska and has been formed to construct, operate, and maintain the Trans-Alaska Gas System (TAGS). The petition states that TAGS will consist of: (i) A 796.5-mile, buried, chilled natural gas pipeline which will have a 36-inch outside diameter and is designed to transport 2.3 billion cubic feet of gas per day from the north slope of Alaska to a tidewater site in Port Valdez, Alaska; (ii) ten compressor stations located along the pipeline to maintain operating pressures between 1,100 and 2,200 psig, and to maintain operating temperatures compatible with ground temperatures; (iii) a liquefied natural gas (LNG) plant designed to reduce the temperature of the gas to −259° (−161° C.), condensing it to a liquid state for storage and shipping; (iv) a marine terminal to simultaneously berth and load two LNG tankers, plus support vessels; and (v) associated LNG tankers for the export of the gas to Asian markets.

Yukon Pacific states that the TAGS pipeline, and all appurtenant facilities, will be located wholly within the state boundaries of Alaska. Yukon Pacific further states that all of the natural gas that flows through TAGS will be exported exclusively into foreign commerce and will not reach markets in other states of the United States. Yukon Pacific has not, as yet, constructed any facilities, but has applied to the U.S. Department of the Interior for a right-of-way permit for the pipeline to the extent it would cross Federal lands.

Any person desiring to be heard or to make any protest with reference to said petition should on or before February 13, 1987, file with the Federal Energy Regulatory Commission, Washington, DC 20426, a motion to intervene or protest in accordance with the requirements of the Commission's Rules of Practice and Procedure (18 CFR 385.214 or 385.211). All protests filed with the Commssion will be considered by it in determining the appropriate action to be taken, but will not serve to make protestants parties to the proceeding. Any person wishing to become a party to a proceeding or to participate as a party in any hearing therein must file a motion to intervene in accordance with the Commission's Rules.

Kenneth F. Plumb,

Secretary.

[FR Doc. 87-267 Filed 1-6-87; 8:45 am]

BILLING CODE 6717-01-M

ENVIRONMENTAL PROTECTION AGENCY

[OPP-36131; FRL-3139-8]

Pesticide Registration Standards Scheduled For FY 87

AGENCY: Environmental Protection Agency (EPA).

ACTION: Notice.

SUMMARY: This notice lists pesticide Registration Standards which are scheduled to be issued or under development during FY 87 and early FY88. The Agency requests the submission of comments and information on the pesticides scheduled for Registration Standard development in FY 87. The Agency has established a public docket for each Registration Standard.

DATE: Written comments on scheduled pesticides should be submitted on or before March 9, 1987.

ADDRESS: Comments should be identified with the docket number listed with each pesticide chemical and should be submitted by mail to: Information Services Section, Program Management and Support Division (TS-757C), Office of Pesticide Programs, Environmental Protection Agency, 401 M St., SW., Washington, DC 20460.

In person, bring comments to: Rm. 236, CM #2, 1921 Jefferson Davis Highway, Arlington, VA.

Information submitted as a comment concerning this notice may be claimed confidential by marking any part or all of that information as "Confidential Business Information" (CBI). Information so marked will not be disclosed except in accordance with procedures set forth in 40 CFR Part 2. A copy of a comment that does not contain CBI must be submitted for inclusion in the public docket. Information not designated "confidential" may be disclosed publicly by EPA without prior notice to the submitter. The public docket will be available for public inspection and copying in Rm. 236 at the address given above, from 8 a.m. to 4 p.m., Monday through Friday excluding legal holidays.

FOR FURTHER INFORMATION CONTACT: By mail: Jean Frane, Registration Division (TS-767C), Office of Pesticide Programs, Environmental Protection Agency, 401 M St. SW., Washington, DC 20460.

Office location and telephone number: Rm. 1114, CM #2, 1921 Jefferson Davis Highway, Arlington, VA, (703) 557-0944.

SUPPLEMENTARY INFORMATION: The Registration Standards program is EPA's approach to the reassessment and reregistration of pesticides as mandated by Congress in section 3(g) of the Federal Insecticide, Fungicide, and Rodenticide Act (FIFRA). The 48,000 pesticide products currently registered by EPA contain some 600 distinct active ingredients. Under this program the scientific data base underlying each active ingredient is thoroughly reviewed, and essential but missing scientific studies are identifed.

The reassessment may result in requirements for submission of data needed to evaluate fully the safety of the compound according to contemporary scientific standards. The results of the review are reflected in a Registration Standard, which states the Agency's regulatory positions regarding the products containing an active ingredient and the rationale for each position, as well as requirements for submission of additional data needed to complete the assessment, and label warnings or other regulatory rstrictions needed to protect health and the environment.

The purpose of this notice is to inform the public of Registration Standards currently under development. It also serves to provide the public with an opportunity to submit additional data pertinent to these reviews. EPA encourages the public to provide information relevant to the review of individual active ingredients for which Registration Standards are scheduled in FY 87. The Agency is particuarly interested in receiving the following types of information: human toxicology, residue chemistry, product chemistry, environmental fate, human exposure, or ecological effects.

Registration Standards for the pesticides listed below will be under development in FY 87. The notation "FRSTR" indicates that the Agency is re-reviewing the chemical based on information submitted as a result of an earlier Registration Standard.

Name of pesticide	Docket No.	Approximate date of issuance
Coal tar/creosote	8007-45-2/8021-39-4	[1] 10/86
Methyl parathion	298-00-0	[1] 11/86
Heptachlor	76-44-8	12/86
Chlordane	12789-03-6	12/86
Aluminum tris (O-ethylphosphonate) (FRSTR)	39148-24-8	12/86
Pentachloronitrobenzene (PCNB)	82-68-8	12/86
Folpet	133-07-3	12/86
Mancozeb	12001-34-2	1/87
Nabam	142-59-6	1/87
Dodine	2439-10-3	2/87
Phenmedipham	13684-63-4	2/87
Propham	122-42-9	2/87
Dichlobenil	1194-65-6	2/87
Diazinon	333-41-5	3/87
Prometryn	7287-19-6	3/87
Oxydemeton-methyl	301-12-2	3/87
Methiocarb	3566-00-5	4/87
Hexakis[2-methyl-2-phenylpropyl] distannoxane	13356-08-6	4/87
Fenamiphos	2224-92-6	5/87
Bendiocarb	22781-23-3	5/87
Oxamyl	23135-22-0	6/87
Diphenamid	957-51-7	6/87
Tebuthiuron	34014-18-1	7/87
Dalapon	75-99-0	7/87
Phosalone (FRSTR)	2310-17-0	7/87
Fenitrothion	122-14-5	8/87
Sumithrin	26002-80-2	8/87
p-Dichlorobenzene	106-46-7	8/87
Dichlorvos	62-73-7	9/87
Fenthion	55-38-9	9/87
Propoxur	114-26-1	9/87
d-trans-Allethrin	28057-48-9	9/87
Isocyanurates	2893-78-9	9/87
Dimethyl tetrachloro-terephthalate	1861-32-1	10/87
Propazine	139-40-2	10/87
Metalaxyl (FRSTR)	57837-19-1	10/87
Phosphamidon	297-99-4	11/87
Malathion	121-75-5	12/87

—Continued

Name of pesticide	Docket No.	Approximate date of issuance
Chlorpropham	101-21-3	12/87
Propanil	709-98-8	12/87

Issued.

The Agency solicits the submission of relevant information on these pesticides.

Dated: December 30, 1986.

Douglas D. Campt,

Director, Office of Pesticide Programs.

[FR Doc. 87-242 Filed 1-6-87; 8:45 am]

BILLING CODE 6560-50-M

[OPP-30000/46A; FRL-3139-9]

Preliminary Determination To Cancel Registrations of Cyanazine Products Unless the Terms and Conditions of the Registration Are Modified; Availability of Technical Support Document and Draft Notice of Intent To Cancel

AGENCY: Environmental Protection Agency (EPA).

ACTION: Notice of preliminary determination.

SUMMARY: This Notice sets forth EPA's preliminary determination regarding the continued registration of pesticide products containing cyanazine and discusses the Agency's assessment of the risks and benefits associated with the pesticidal uses of cyanazine. On April 10, 1985, EPA issued a Notice of Initiation of Special Review of Registrations of Products Containing Cyanazine. This Notice announces the Agency's preliminary determination to allow continued use of registered cyanazine pesticide products only if registrants modify certain terms and conditions of registration as noted herein. In addition, this Notice announces the availability of the Cyanazine Technical Support document and a draft Notice of Intent to Cancel. The Technical Support Document and accompanying science reviews comprise the technical documents in support of this preliminary determination.

DATE: Written comments must be received on or before March 9, 1987.

ADDRESS: Submit three copies of written comments, bearing the document control number "OPP-30000/46A, by mail to: Information Services Section, Program Management and Support Division (TS-757C), Office of Pesticide Programs, Environmental Protection Agency, 401 M St., SW., Washington, DC 20460. In person bring comments to: Rm. 236, Crystal Mall Building #2, 1921 Jefferson Davis Highway, Arlington, VA.

Information submitted in any comment concerning this Notice may be claimed confidential by marking any part or all of that information as "Confidential Business Information" (CBI). Information so marked will not be disclosed except in accordance with procedures set forth in 40 CFR Part 2. A copy of the comment that does not contain CBI must be submitted for inclusion in the public docket. Information not marked CBI may be disclosed publicly by EPA without prior notice to the submitter. The cyanazine public docket, which contains all non-CBI written comments, and the corresponding index, will be available for public inspection in Rm. 236 at the Virginia address given above, from 8 a.m. to 4 p.m., Monday through Friday, excluding legal holidays.

FOR FURTHER INFORMATION CONTACT: For general information, contact by mail: Joanna Dizikes, Registration Division (TS-767C), Office of Pesticide Programs, Environmental Protection Agency, 401 M St., SW., Washington, DC 20460.

Office location and telephone number: Rm. 1006, Crystal Mall Building #2, 1921 Jefferson Davis Highway, Arlington, VA, (703-557-5096).

For a copy of the Technical Support Document, to request information concerning the Special Review public docket, or to request indices to the Special Review public docket, contact Frances Mann (703-557-2805). It is suggested that such material be requested no later than February 6, 1987 to allow sufficient time for the requestor to receive the material before the close of the comment period.

SUPPLEMENTARY INFORMATION: This Notice is organized in the following units. Unit I provides the background on cyanazine and the initiation of the Special Review. Unit II provides the legal background. Unit III provides a summary of the risk and benefit determinations and proposed regulatory actions. Unit IV sets forth procedural matters. Unit V discusses the opportunity for public comment. Unit VI includes information on the public docket.

I. Background

Cyanazine is the accepted, common name for 2-(4-chloro-6-ethylamino-s-triazine-2-ylamino)-2 methyl propionitrile, and its trade name is Bladex®. Pesticide products containing cyanazine have been registered since 1971; there have been three registrants of cyanazine products in the United States: Shell Chemical Company; R. F. Lindsey & Sons: and Setre Chemical Company. With the exception of Shell's registered, cyanazine products, all other registered, cyanazine products have been canceled voluntarily.

Cyanazine is a pre- or postemergent herbicide, registered for use to control annual grasses and broadleaf weeds in corn, cotton, grain sorghum (milo), and fallow cropland which may subsequently be planted to wheat. Approximately 95 percent of the total domestic usage is on corn. Cotton (3 percent) is the second most common use, and grain sorghum (1 percent) and wheat fallow (<1 percent) are the other use sites.

On January 3, 1985, EPA issued a Registration Standard for pesticide products containing cyanazine. In addition to requiring certain data be submitted, the Standard announced the Agency's position on continued registration including certain labeling changes which should be made. These changes included, among others, making the pesticide a restricted use pesticide and the addition of a statement that it causes birth defects in laboratory animals.

EPA issued a Notice of Special Review (also called Position Document 1 or "PD 1") for pesticide products containing cyanazine which was published in the **Federal Register** of April 10, 1985 (50 FR 14151). EPA initiated the Special Review on pesticide products containing cyanazine following the determination that cyanazine met or exceeded the risk criterion in 40 CFR 162.11(a)(3)(ii)(B), which were in effect at that time. The new, revised risk criterion for chronic or delayed toxic effects, issued in the **Federal Register** of November 27, 1985 (50 FR 49003) incorporate oncogenicity, mutagenicity, and teratogenic effects, as well as other chronic or delayed toxic effects. [See 40 CFR 154.7(a)(2).] The risks of cyanazine use, as described in Unit III of this Notice, exceed the new criterion as well.

The Special Review was based on teratology studies showing that

cyanazine was teratogenic and fetotoxic in laboratory animals. Specifically, a study with Fisher 344 rats showed orally administered cyanazine to be teratogenic at 25 mg/kg (No-Observed-Effect Level (NOEL)= 10 mg/kg). The teratogenic effects were anophtalmia (no eyes), micro-phthalmia (small eyes), and diaphragmatic hernia. Cyanazine also was shown to cause fetotoxic effects when fed to New Zealand rabbits at 2 mg/kg (low litter weights), with dilated brain ventricles, anophthalmia, and microphthalmia at 4 mg/kg. The NOEL for this study was 1 mg/kg. Additionally, the Agency determined that the teratogenic potential of cyanazine posed a significant risk through dermal exposure to mixers/loaders and applicators who use pesticide products containing cyanazine.

The basis of EPA's decision to initiate the Special Review on cyanazine is further detailed in a document entitled "Guidance for the Reregistration of Pesticide Products Containing Cyanazine" (Guidance Document) which was issued in December 1984. In the PD 1, which was issued in April 1985, EPA solicited comments on the risks and benefits associated with all uses of cyanazine.

Based on information received in the public comments, as well as on additional data and analyses (including a dermal absorption study and two dermal teratology studies) which have become available since initiation of the Special Review, EPA has made a preliminary determination to cancel the registration of product containing cyanazine unless certain modifications of the terms and conditions of registration are made by registrants. EPA's position and a summary of the rationals underlying that position is set forth in this Notice. The basis for EPA's actions are explainned more fully in the cyanazine Technical Support Document, copies of which are available upon request from the contact person identified earlier.

In accordance with the Federal Insecticide, Fungicide, and Rodenticide Act, EPA is sending a copy of this Notice, the Technical Support Document, and the draft Notice of Intent to Cancel to the Secretary of Agriculture and the Scientific Advisory Panel for the required 30-day review. EPA is also providing a 60-day public comment period on these documents. After reviewing any comments received within the applicable time limits, EPA will determine what final regulatory actions are appropriate.

II. Legal Background

A. The Statute

A pesticide product may be sold or distributed in the United States only if it is registered or exempt from registration under the Federal Insecticide, Fungicide, and Rodenticide Act (FIFRA) as amended (7 U.S.C. 136 et seq.). Before a product can be registered, it must be shown that it can be used without "unreasonable adverse effects on the environment" (FIFRA section 3(c)(5)), that is, without causing "any unreasonable risk to man or the environment, taking into account the economic, social, and environmental costs and benefits of the use of the pesticide" (FIFRA section 2(bb)). The burden of proving that a pesticide meets this standard for registration is, at all times, on the proponent of initial or continued registration. If at any time the Agency determines that a pesticide no longer meets this standard for registration, then the Administrator may cancel this registration under section 6 of FIFRA.

B. The Special Review Process

The Special Review process, formerly called the Rebuttable Presumption Against Registration (RPAR) is a mechanism by which the Agency collects information on the risks and benefits associated with the uses of pesticides to determine whether any use causes unreasonable adverse effects to human health or the environment. The Special Review process is currently governed by 40 CFR Part 154.

Through the Special Review process the Agency (1) announces and describes the Agency's finding that use of a pesticide meets one or more of the risk criteria; (2) establishes a public docket; (3) solicits comments from the public and, under certain circumstances, from the Secretary of Agriculture and the Scientific Advisory Panel regarding the Agency's analysis and proposed regulatory decisions; (4) reviews and responds to all significant comments submitted in a timely manner; and (5) makes a final regulatory decision based on a balancing of risks and benefits associated with a pesticide's use.

Issuance of this Notice means that potential adverse effects and benefits associated with the use of pesticide products containing cyanazine have been assessed and that the Agency has preliminarily determined that, unless the terms and conditions of registration are modified as proposed in this Notice, the risks from exposure to cyanazine outweigh the benefits of its use.

As noted in the unit of this Notice entitled **FOR FURTHER INFORMATION CONTACT**, a document entitled "Cyanazine Technical Support Document" (Technical Support Document) has been developed and is available to the public. The Technical Support Document provides a detailed explanation of the basis for EPA's preliminary decision and also contains references, background information, and other information pertinent to the registration of pesticide products containing cyanazine.

In addition, copies of a draft Notice of Intent to Cancel Registrations of Cyanazine Products are also available from the contact person listed above. Preparation of the draft Notice of Intent to Cancel is required by 40 CFR 154.31(b)(1). This draft Notice must be forwarded to the Scientific Advisory Panel and the Secretary of Agriculture to permit their review of the Agency's action. The draft Notice of Intent to Cancel, together with the Cyanazine Technical Support Document and this Notice prepared pursuant to 40 CFR 154.31, are being sent to all registrants and applicants for registration of cyanazine products. The draft Notice of Intent to Cancel contains the provisions regarding disposition of existing stocks, compliance by intrastate producers, and procedures for requesting a cancellation or denial hearing.

III. Summary of the Risk and Benefit Determinations and Proposed Regulatory Actions

A. Determinations on Risks

The margins of safety presented in the Registration Standard and Notice of Initiation of Special Review (PD 1), with respect to dermal exposure, were based on a NOEL from an oral developmental toxicity study. A dermal developmental toxicity study was not available at the time the Special Review was initiated. A dermal developmental toxicity study has since been submitted and was used to determine risks to mixers/loaders and applicators from dermal exposure.

As noted earlier, after the Special Review was initiated on cyanazine, the Agency received two dermal teratology studies. The first developmental toxicity study was in New Zealand rabbits using the Bladex® 4L formulation and resulted in maternal toxicity at all dose levels, including the lowest dose used; therefore, a NOEL for maternal toxicity could not be established for this study, and the lowest-effect-level (LEL) was established at the lowest dose used, 0.2 ml/kg. Because the study did not permit establishment of a NOEL and because the number of litters per test group was

not sufficient, the study was not used for a quantitative risk assessment.

The second dermal teratology study submitted was a repeat study of the study discussed in the prior paragraph. In this repeat study, a maternal NOEL was demonstrated at <96 mg/kg (lowest dose tested), and the developmental toxicity NOEL was established at 573 mg/kg.

As demonstrated by these studies, the dermal route of exposure did not lead to frank teratogenic effects, although developmental toxicity was demonstrated. The reduced effects seen via the dermal route are probably related to the low observed rate of dermal absorption; only 2 percent of the applied dose of Bladex® was absorbed in a dermal absorption study conducted on rats, which also was submitted following initiation of the Special Review.

Additionally, following initiation of the Special Review, the Agency received two workers exposure studies conducted with cyanazine. These studies were used to estimate the dermal exposure to individuals when mixing and loading cyanazine while wearing gloves and using a closed tractor cab and dermal exposure when utilizing gloves and an open cab tractor. Surrogate exposure studies were used to estimate the dermal exposure during mixing/loading operations for aerial application and chemigation when no protection is used, only protective gloves are used, and when both protective gloves and closed loading systems are used.

Based on the NOEL (573 mg/kg) from the dermal developmental toxicity study in rabbits and the exposure estimates determined above, the margin-of-safety (MOS's) were developed using the following formula:

$$\text{MOS} = \frac{\text{Dermal Developmental Toxicity NOEL}}{\text{Exposure Level}}$$

The Agency generally considers an MOS above 100 to be acceptable. The resulting MOS's for the various uses of cyanazine are given below:

a. *Ground boom application*—i. *Corn.* The MOS's given in Table 1 represent the risks to applicators, mixers, and loaders. (The risk assessments for ground boom use assume that the mixer/loader and the applicator are the same person.)

While, the MOS's vary depending on use rate and acreage treated, as shown in Table 1, the MOS's are adequate for all application rates to corn when protective gloves are worn during mixing and loading operations and when adjusting, repairing, or cleaning equipment.

ii. *Cotton, milo, and wheat fallow.* The usage of cyanazine on cotton, milo and wheat fallow amounts to less than 5 percent of all cyanazine use. As noted in Table 1, the MOS's are adequate for all application rates to these crops when protective gloves are worn during mixing and loading operations and when adjusting, repairing, or cleaning equipment.

TABLE 1.—MARGINS OF SAFETY FOR GROUND BOOM APPLICATION*

	Corn	Cotton	Wheat fallow	Milo
Applicator**:				
No protection	7	21	11	21

TABLE 1.—MARGINS OF SAFETY FOR GROUND BOOM APPLICATION*—Continued

	Corn	Cotton	Wheat fallow	Milo
Gloves	670	1,980	990	1,980
Gloves/closed cab	4,240	12,730	6,370	12,730

* The MOS's in this table are for the highest use rates.
** Assumes that mixer/loader and applicator are the same person.

b. *Aerial application.* Aerial application to corn is minimal. There are no data showing that cyanazine is being aerially applied to cotton, wheat fallow, or sorghum.

As shown in Table 2, the MOS's for mixer/loaders during aerial use are not acceptable unless protective gloves are worn during mixing and loading operations and when adjusting, repairing, or cleaning equipment and a closed loading system is used. Product formulations which cannot be used in a closed loading system would have to prohibit aerial application.

TABLE 2.—MARGINS-OF-SAFETY FOR AERIAL APPLICATION [1]

	Grain sorghum	Corn	Wheat fallow
Applicator (Pilot)	320	170	250
Mixer/loader:			
No Protection (open pour)	5	2	2
Gloves (open pour)	24	11	12
Gloves/closed system	1,000	440	520

[1] The MOS's in this table are for the highest use rates.

c. *Chemigation.* Corn is the only crop for which chemigation is listed on the label as an application method. As shown in Table 3, the MOS's for chemigation are not acceptable unless both protective gloves are worn during mixing and loading operations and when adjusting, repairing, or cleaning equipment and a closed loading system is used. Product formulations which cannot be used in a closed loading system would have to prohibit use of chemigation.

TABLE 3.—MARGINS OF SAFETY FOR CHEMIGATION [1]

	Corn
Applicator:	
No protection (open pour)	13
Gloves (open pour)	59
Gloves/closed system	2,490

[1] The MOS's in this table are for the highest use rates.

d. *Spray drift and secondary exposure.* Surrogate exposure studies were used to estimate exposure to cyanazine through spray drift. Based on these exposure estimates, the MOS for a population exposed to cyanazine by spray drift would be over 1,000. Secondary exposure may also occur when contaminated clothes are brought home. Although data are not available to quantify such exposure, data do show that cross-contamination does occur when contaminated clothes are washed with household laundry. The Agency, therefore, believes that cyanazine-contaminated clothes should be washed separately from household laundry to prevent cross-contamination of other laundry.

e. *Chemical resistant aprons.* While the risk of dermal exposure to the body from leaning against tanks during mixing or loading operations, a common practice, and accidental spills cannot be quantified, they may be significant in light of the teratogenic effects of cyanazine. The Agency, therefore, believes that a chemical-resistant apron should be worn when mixing or loading cyanazine.

f. *Washing of protective gloves.* Because hands receive the largest percentage of the dermal exposure during mixing/loading, it is assumed that the protective gloves will be contaminated on the outside with a large percentage of the cyanazine being handled. Therefore, the Agency believes that language should be added to all cyanazine labels which states that protective gloves must be washed with soap and water after use and before being removed from the hands.

g. *Restricted use.* All cyanazine products are already required to be classified for restricted use. Furthermore, Agency policy states that when a pesticide is classified for

restricted use the reason for that classification must be printed in the "Restricted Use" statement which appears on the label. Therefore, all cyanazine labels are required to add to their "Restricted Use" statement that cyanazine products have been classified for restricted use because cyanazine has caused birth defects in laboratory animals and has been found in ground water.

B. Determination of Benefits

1. Ground Boom Application

The largest use of cyanazine is on corn, accounting for about 95 percent of its total annual usage. Approximately 4.6 million acres (14 to 16 percent of the total U.S. corn acreage) of corn were treated in 1982 with cyanazine as the sole active ingredient. Cyanazine is applied to corn as a pre-emergence or postemergence broadcast application by ground equipment in the spring. Growers select cyanazine over currently available herbicides for the following reasons: (1) It has a wide annual broadleaf and grass weed control spectrum; (2) it can be tank-mixed with a number of herbicides to broaden its weed control spectrum; (3) it has relatively short persistence in the soil; and (4) it has no rotational crop restrictions.

There are several alternatives to cyanazine, and the Agency assumes that there would be no significant increase in production costs if they are used. A limited number are registered which control as wide a spectrum of weeds as cyanazine. Atrazine is the major alternatives to cyanazine for pre- or postemergent control. Also, atrazine is the most widely used herbicide on corn; however, residues may carry over in the soil to the next crop and limit the growers' options for rotational crops.

Cyanazine is reported to be better than alachlor for the control of grasses and is often recommended when grassy weeds are a concern. Atrazine does not adequately control foxtail and other annual grasses at lower rates or under low rainfall conditions as well as does cyanazine. Other herbicides which compete with cyanazine are simazine, a tank mix of butylate and atrazine, and package mixes of metolachlor and atrazine and atrazine and propachlor. These tank mixes have a smaller weed control spectrum, and those mixed with atrazine still produce a carry-over effect.

Cyanazine rates above 2.5 lbs active ingredient (ai) per acre are used on high organic matter soils (above 3 percent organic matter), on soils with a pH greater than 7.0, and on wet/cool soils, because atrazine cannot be used at effective rates on these soils without excessive phytotoxicity to rotational crops. In the following areas, only cyanazine is available as a pre-emergence control for the cyanazine grass/broadleaf weed complex: North Central Iowa; South East Minnesota; parts of Wisconsin, Michigan, New York, and Pennsylvania; and the Blackland soils area of Texas. Generally, one pound of triazine is needed for each percent of organic matter for effective weed control.

Atrazine is the most likely chemical alternative to cyanazine for weed control. However, cyanazine has short soil persistence when compared to atrazine. Thus, phytotoxicity may result from atrazine carry-over when atrazine is used on certain soil types.

Only 1 percent of the wheat fallow acreage grown in the United States is treated with cyanazine. Mechanical tillage is still the most common form of weed control and is used on 50 to 90 percent of the total fallow wheat acreage.

Cyanazine is valuable in most wheat fallow programs involving the use of chemicals because of its broad spectrum weed control and short term soil residual activity. Atrazine is an alternative soil active herbicide that, unlike cyanazine, is highly persistent. Under those conditions that favor herbicide persistence, atrazine residues are often still available in the soil at the fall planting of the wheat, resulting in crop phytotoxicity. Atrazine can sometimes be applied at reduced rates to minimize the carry-over problem, but weed control consequently becomes less reliable.

The weed control spectra of cyanazine and atrazine are generally considered to be similar. Cyanazine does not provide good control of pigweed but generally provides better control of grasses, especially fall panicum and crabgrasses.

In cotton, cyanazine may be applied pre-emergent, directed early postemergent or as a layby (late) postemergent directed treatment. It can be tank mixed with norflurazon as a pre-emergent treatment or with MSMA as a postemergence directed spray. Both cyanazine and the tank mix with norflurazon are recommended as the best treatment to control spotted spurge. Possible alternatives to cyanazine use in cotton would be prometryn, fluometuron, and diuron; however, cyanazine is registered for control of more weeds than any of the other three herbicides. Diuron has more rotational crop restrictions than does cyanazine. Approximately 84 percent of the cyanazine used on cotton is reported to be applied as a directed postemergence treatment. The remaining 16 percent is applied as pre-emergent treatments.

Cyanazine may be applied to grain sorghum as a pre-emergent application but only when tank mixed with propachlor or with propazine. These tank mixes cannot be used on sand, sandy loam, loamy sand, and peat or muck soils. Also, these tank mixes have several geographical restrictions because of possible crop injury under stress conditions. Potential alternatives to cyanazine include propachlor and atrazine as a tank or package mix, and the package mix of metolachlor and atrazine. These alternatives except for propachlor also carry crop rotational or regional restrictions. The cyanazine tank mixes appear to control more broadleaf weeds than the alternatives. Generally, the tank mix of cyanazine and propazine is believed to give better control of broadleaf weeds than the cyanazine and propachlor tank mix. However, cyanazine tank mixes are generally less effective on cocklebur and morningglory.

2. Aerial Application

Cyanazine is most frequently applied for pre-emergent weed control in corn. Pre-emergent chemicals are rarely applied aerially since it is relatively easy for a grower to apply these types of herbicides during other agricultural operations. Available data indicate that approximately 70,000 acres of corn are treated aerially with cyanazine. There are no data showing that cyanazine is being applied aerially to cotton, wheat fallow or sorghum.

3. Chemigation

No significant usage of cyanazine through chemigation has been reported.

C. Risk/Benefit Analysis

The Agency has determined that, with current label restrictions, the risks posed to applicators, mixers and loaders outweigh the benefits from use of cyanazine to corn, cotton, wheat fallow, and sorghum.

There are several registered, alternative pesticides for ground boom use on sorghum, cotton, and wheat fallow, as well as mechanical tillage for weed control in wheat fallow. There are several, registered alternatives pesticides for use on corn at the lower use rates (<2.5 lbs a.i. per acre), which the Agency assumes can be used with no significant increase in production costs. For rates above 2.5 lbs a.i. per acre, atrazine is the only available alternative for ground boom use on corn

to control some weeds, and under certain conditions it cannot be used.

The Agency believes the risks posed from ground boom use of cyanazine can be lowered to acceptable margins with the use of protective gloves during mixing and loading and adjusting, repairing or cleaning equipment and the use of chemical resistant aprons during mixing and loading operations. The costs involved to comply with these restrictions are minimal in comparison to the risks involved. Such compliance will allow continued availability of cyanazine for use through ground boom application and preserve the benefits of its use.

The Agency has determined that, under current restrictions, the risks posed to applicators, mixers, and loaders outweigh the benefits from use of cyanazine through aerial application and chemigation.

Cyanazine is rarely applied aerially since it is relatively easy for a grower to apply it via ground boom during other agricultural operations. There is an insignificant acreage of corn treated aerially (approximately 70,000 acres). There are no data showing that cyanazine is being applied aerially to cotton, wheat fallow, or sorghum. No significant usage of cyanazine through chemigation has been reported.

The Agency believes the risks posed from aerial and chemigation uses of cyanazine can be lowered to acceptable margins with the use of: (1) Protective gloves during mixing and loading and adjusting, repairing or cleaning equipment; (2) the use of chemical-resistant aprons during mixing and loading operations; and (3) the use of a closed loading system. Product formulations which cannot be used in a closed loading system would have to prohibit aerial use and chemigation. The costs involved to comply with these restrictions are minimal in comparison to the risks involved. Such compliance will allow continued availability of cyanazine for use through aerial application and chemigation and preserve the benefits of its use.

The Agency has determined that secondary exposure may also occur when contaminated clothes are brought home. Available data show that cross-contamination does occur when contaminated clothes are washed with household laundry. Although data are not available to quantify such exposure, the Agency believes it prudent that a precautionary statement be added to the label concerning the need to wash cyanazine-contaminated clothes separately from other household laundry. There are minimal costs involved to the user from such a precaution.

Because hands receive the largest percentage of the dermal exposure during mixing/loading, it is assumed that the protective gloves will be contaminated on the outside with a large percentage of the cyanazine being handled. Therefore, the Agency believes that language should be added to all cyanazine labels which states that protective gloves must be washed with soap and water after use and before being removed from the hands.

All cyanazine products are already required to be classified for restricted use. Furthermore, Agency policy states that when a pesticide is classified for restricted use the reason for that classification must be printed in the "Restricted Use" statement which appears on the label. Therefore, all cyanazine labels are required to add to their "Restricted Use" statement that cyanazine products have been classified for restricted use because cyanazine has caused birth defects in laboratory animals and has been found in ground water.

D. Proposed Regulatory Actions

The proposed regulatory actions specified herein are based on the assumption that registered products are in compliance with Agency regulatory positions announced in the cyanazine registration standard.

1. Ground Boom Application

It is proposed that cyanazine labels require the use of protective gloves when mixing or loading, or when adjusting, repairing, or cleaning equipment. Furthermore, because dermal exposure to the body results commonly from leaning against tanks during mixing or loading operations and because accidental spills may occur, it is further proposed that cyanazine labels require the use of a chemical-resistant apron when mixing or loading cyanazine for ground boom use.

2. Aerial Application and Chemigation

It is proposed that cyanazine labels require both the use of protective gloves (i.e. when mixing or loading, or when adjusting, repairing or cleaning equipment) and the use of a closed loading system, when applying cyanazine through aerial or chemigation methods. Product formulations which cannot be used in a closed loading system would have to prohibit aerial use and chemigation. In addition, it is further proposed that cyanazine labels require the use of a chemical-resistant apron when mixing and loading cyanazine to protect against accidental spills and closed loading system failures. Closed loading systems may break down and hoses may rupture, sending a hard spray of the pesticide onto the mixer or loader. Also, as during ground boom operations, dermal exposure to the body from leaning against tanks during mixing and loading is also very common during aerial use and chemigation.

3. Laundering of Contaminated Clothes

It is proposed that the cyanazine labels require the following precaution concerning laundering of the contaminated clothing:

Cyanazine-contaminated clothes should be laundered separately from household laundry to prevent cross contamination of other laundry. Heavily contaminated or drenched clothing and protective equipment must be discarded or destroyed in accordance with State and local regulations.

4. Washing of Protective Gloves

It is proposed that cyanazine labels require the following precaution concerning the washing of protective gloves:

Protective gloves must be washed with soap and water after use and before removing from the hands.

5. Restricted Use

All cyanazine products have been required to be classified for restricted use. Furthermore, all cyanazine labels are required to add to their "Restricted Use" statement that cyanazine products have been classified for restricted use because cyanazine has caused birth defects in laboratory animals and has been found in ground water.

IV. Procedural Matters

A. Referral to the Secretary of Agricultural and the Scientific Advisory Panel

As required by FIFRA sections 6(b) and 25(d), and 40 CFR 154.31(b), EPA will transmit copies of this Notice, a draft Notice of Intent to Cancel and the support documents, to the Secretary of Agricultural and the Scientific Advisory Panel for comment. If either the Secretary or the Panel comments in writing on EPA's proposed action within 30 days of receipt of the draft Notice and support documents, the Agency must publish any comments received from the Secretary or the Panel, and EPA's responses, in the Notice of Final Determination.

B. Intrastate Products

Pursuant to 40 CFR 162.17, EPA hereby notifies producers of all

cyanazine products registered solely for intrastate sale and distribution that they are required to submit a complete application for Federal registration. These applications must be submitted within 60 days of the date on which this Notice is published in the **Federal Register** or the date on which the intrastate producer receives a copy of this Notice, whichever is later. If an intrastate producer fails to submit a timely application, EPA will consider his Notice of Intent to Apply as an application for Federal registration for purposes of the review described below.

EPA will review all applications submitted. If EPA decides, in light of comments received in response to this Notice, to issue a final notice allowing continued use of cyanazine products under certain circumstances, EPA will notify intrastate producers of that decision and allow them at least 30 days in which to make changes that would allow EPA to approve the application for Federal registration. If the application has not been corrected in the prescribed manner within the period allowed, the application may be denied. On the other hand, if EPA issues a final notice cancelling the registrations of cyanazine products, that notice will also include a final Notice of Denial for all applications for Federal registration of intrastate pesticide products containing cyanazine for uses subject to that Notice.

Under FIFRA section 3(c)(6), the issuance of a denial notice entitles an applicant, or other interested person with the concurrence of the applicant, to request an adjudicatory hearing to challenge the denial decision. The procedures for requesting a hearing and the consequences of not filing a request are discussed below in Unit IV.C.1.

C. Procedures for Responding to Notice of Final Determination

1. Hearing Request

Registrants, applicants, and other interested parties who would be adversely affected by any decision to cancel or deny applications for the registration of cyanazine products would be entitled to request a hearing in which to contest EPA's final decision to cancel registrations and deny applications for failure to comply with the modifications to registration listed in Unit III.D of this notice. Under FIFRA, such persons must submit their requests for a hearing within 30 days either of receipt of the final Notice of Intent to Cancel or Notice of Denial or of its publication in the **Federal Register**, whichever is later. As EPA will explain in detail in any final Notice of Intent to Cancel or Notice of Denial, a hearing request must contain information concerning the basis of the request. If a timely, properly formulated hearing request is submitted and a hearing is initiated, the product registrations which are the subject of the request will remain in effect during the cancellation hearing. Similarly, applications for registrations with respect to which valid and timely hearing requests have been filed remain pending unless and until they are denied or granted by order of the Administrator at the conclusion of the hearing.

If a proper and timely hearing request is not submitted for a product, registration of that product would be cancelled, or in the case of intrastate products, the application would be finally denied by operation of law 30 days after the final Notice was issued. A final cancellation or denial would have the effect or prohibiting further sale and distribution, except as specified in any existing stocks provision included in the final notice.

2. Amendment of Registration or Application

Registrants who would be affected by any final decision to cancel the registrations of cyanazine products unless the terms and conditions of the registrations are modified may avoid cancellation, without requesting a hearing, by filing an application for an amended registration that contains the label modifications detailed in the Notice of Final Determination. This application must be filed within 30 days of receipt of the final notice, or within 30 days of publication of the final notice, whichever occurs later. Similarly, applicants for a registration that would be subject to the final notice would have to file an amended application for registration within the applicable 30-day period to avoid denial of the application.

It should be noted that registrants (and applicants) are not required to request a hearing or to amend their registrations (or applications) at this time in order to be allowed to continue to sell and distribute their products within this period.

V. Public Comment Opportunity

The Agency is providing a 60-day period to comment on this Notice and on the cyanazine Technical Support Document. The Agency is particularly soliciting comments on the issue discussed in Unit III above. Comments must be submitted by March 9, 1987. All comments and information should be submitted in triplicate to the address given in this Notice under **ADDRESS**, to facilitate work of EPA and others interested in inspecting them. The comments and information should bear the identifying notation OPP-30000/46A. All comments, information, and analysis which come to the attention of EPA may serve as a basis for final determination of regulatory action during the Special Review.

During the comment period, interested members of the public or registrants may request a meeting to discuss factual information available to the Agency, to present any factual information, to respond to presentations by other persons, or to discuss what regulatory actions should be taken regarding cyanazine. Persons interested in arranging such meetings should contact the Review Manager listed in this Notice under **FOR FURTHER INFORMATION CONTACT.**

VI. Public Docket

Pursuant to 40 CFR 154.15, the Agency has established a public docket (OPP-30000/46A) for the Cyanazine Special Review. This public docket includes (1) this Notice; (2) any other notices pertinent to the Cyanazine Special Review; (3) non-CBI documents and copies of written comments or other materials submitted to the Agency in response to this Notice, and any other Notice, regarding cyanazine submitted at any time during the Special Review process by any person outside government; (4) a transcript of any public meeting held by the Agency for the purpose of gathering information on cyanazine; (5) memoranda describing each meeting held during the Special Review process between Agency personnel and any person outside government pertaining to cyanazine; and (6) a current index of materials in the cyanazine public docket.

On a monthly basis, the Agency will distribute a compendium of indices for newly received comments and documents that have been placed in the public docket for this Special Review. This compendium will be distributed by mail to those members of the public who have specifically requested such material for this Special Review, pursuant to 40 CFR 154.15(f)(3).

Dated: December 29, 1986.

Victor J. Kimm,

Acting Assistant Administrator, Office of Pesticides and Toxic Substances.

[FR Doc. 87-241 Filed 1-6-87; 8:45 am]

BILLING CODE 6560-50-M

[OPP-36134; FRL-3136-3]

Toxicology Data Call-In for Antimicrobial Pesticides

AGENCY: Environmental Protection Agency (EPA).

ACTION: Notice of toxicology data requirements for antimicrobial pesticide active ingredients and availability of toxicology data call-in letter.

SUMMARY: This Notice announces EPA's strategy for obtaining toxicology data for active ingredient (AI) chemicals used in antimicrobial pesticide formulations. Under the authority of section 3(c)(2)(B) of the Federal Insecticide, Fungicide, and Rodenticide Act (FIFRA), as amended, EPA is requiring subchronic and chronic toxicology data on AIs from registrants of antimicrobial pesticides. EPA is presenting registrants of most antimicrobial pesticides the following options: (1) Develop all subchronic and chronic toxicology data required under 40 CFR 158.135 consistent with the exposure category into which EPA has placed each respective product use pattern. (2) Develop the Tier 1 toxicology data and participate in a joint effort with other antimicrobial pesticide registrants to develop representative exposure data on the major antimicrobial use sites and application methods. (3) Develop the Tier 1 toxicology data and provide the required exposure data for each of the individual end-use products. EPA will send each registrant a Data Call-In letter.

FOR FURTHER INFORMATION CONTACT:

By mail: Linda Lyon, Registration Division (TS-767C), Office of Pesticide Programs, Environmental Protection Agency, 401 M St. SW., Washington, DC 20460.

Office location and telephone number: Rm. 711H, CM #2, 1921 Jefferson Davis Highway, Arlington, VA 22202, (703-557-7470).

Contact Ms. Lyon for a copy of the Data Call-In letter.

SUPPLEMENTARY INFORMATION: 40 CFR Part 158 specifies the data that EPA requires to make regulatory judgments about the safety of pesticide products. EPA will reregister a pesticide product only if EPA has sufficient information to make the statutory risk and benefit determinations. The Part 158 regulations are flexible to accommodate the wide range of factors attendant to the regulation of such diverse products. In implementing Part 158, EPA intends to require only those data necessary to assess hazards properly and make decisions about the safety of the pesticide and its uses.

In the past, EPA has assumed that exposure to most antimicrobial pesticides involved only short term exposure to low concentrations of the AI. Consequently, EPA has required only acute toxicity data to register most antimicrobial pesticide products. However, in reviewing the data for registration standard development and other program activities, EPA has concluded that more data are needed to evaluate properly the potential hazards associated with the use of antimicrobial pesticides. Rather than address data requirements for antimicrobial pesticides on a chemical-by-chemical basis, EPA has reassessed the general use patterns of antimicrobial pesticides (Appendix A to Part 158, Use Pattern Index) to determine potential applicator and post application exposure, routes of exposure, and frequency of exposure resulting from pesticide use. As a result, EPA has identified the toxicology data required to support or maintain the registration of antimicrobial pesticides, based on environmental characteristics, physicochemical properties, and qualitative estimations of exposure.

Options for Fulfilling Data Requirements

EPA is allowing registrants a choice of 3 options for fulfilling the toxicology data requirements. These options are described below.

Option 1

EPA has examined the General Pesticide Use Site Groups in Appendix A to Part 158. EPA identified the major use patterns which pertain to antimicrobials and evaluated the type and estimated level of exposure experienced by the respective user populations. Exposure occurring frequently at a high rate is classified as high exposure. Exposure occurring either infrequently at a high rate or frequently at a low rate is classified as medium exposure. Exposure occurring infrequently at a low rate is classified as low exposure. Each exposure category triggers a defined set of data requirements consistent with § 158.135. All exposure categories require a 90-day dermal or inhalation study, a teratology study in one species, and a battery of mutagenicity tests. Medium exposure also requires a subchronic feeding study, a teratology study in a second species, and a dermal absorption study. High exposure triggers the aforementioned studies plus chronic feeding, oncogenicity, reproduction, and metabolism studies.

Option 2

EPA is concerned about the economic impacts that imposing full data requirements would have on the antimicrobial pesticide industry, the user community, and the Agency. Therefore, EPA is providing registrants the option of conducting exposure studies and Tier 1 toxicology testing (90-day dermal or inhalation study, teratology in one species, and a battery of mutagenicity tests) as a first step toward fulfilling the toxicology data requirements. This option will lessen the financial impact on antimicrobial manufacturers while providing EPA with data necessary to evaluate the potential hazards of the AIs.

The exposure based options require registrants to develop inhalation and dermal exposure data bases for applicator scenarios that are relevant to various use patterns. These data will facilitate the estimation of occupational and post application exposure to antimicrobial pesticides. These exposure models and the minimal required toxicity data will, in turn, provide an indication of the amount of subchronic and chronic toxicology testing needed to support the registration of antimicrobial AIs. This may obviate the need for EPA to impose all toxicology data requirements for each AI. EPA will review the exposure and Tier 1 toxicology data to determine the degree and nature of toxicological concern pertaining to the use of each AI. If the results of the Tier 1 toxicology tests and exposure data show no cause for concern, then EPA will not require further testing. However, if results of the exposure or toxicology studies raise concerns, EPA will impose further toxicology data requirements as appropriate.

Option 2 provides registrants the opportunity to collaboratively develop generic exposure data. This will facilitate consistency in the design and results of the studies and lessen the financial impact on industry. EPA is encouraging registrants to pursue agreements for the joint development of the exposure studies through a single organization. Registrants are invited to consult with EPA to develop procedures for obtaining the necessary data, developing appropriate protocols, and selecting products for conducting exposure tests.

Option 3

Option 3 is the same as Option 2 except that each registrant must independently develop exposure data for the use patterns of its registered products.

For registrants choosing Option 2 or 3, EPA will review the results of the Tier 1 toxicology data and exposure studies,

and then determine what, if any, additional toxicology data are required for these antimicrobial AIs.

It must be noted that some high exposure uses of antimicrobial AIs (e.g., swimming pools, metal working) are not amenable to exposure monitoring via the passive dosimetry methods described in the Subdivision U of the proposed Pesticide Assessment Guidelines (Applicator Exposure Monitoring). For these uses registrants must submit all subchronic and chronic toxicology data required for high exposure unless registrants can develop suitable alternative protocols for exposure monitoring.

Dated: December 19, 1986.

John A. Moore,

Assistant Administrator for Pesticides and Toxic Substances.

[FR Doc. 87-109 Filed 1-6-87; 8:45 am]

BILLING CODE 6560-50-M

FEDERAL COMMUNICATIONS COMMISSION

[MM Docket No. 86-484; FCC 86-549]

Reexamination of the Commission's Comparative Licensing, Distress Sales and Tax Certificate Policies Premised on Racial, Ethnic or Gender Classifications; Notice of Inquiry

Adopted: December 17, 1986. Released: December 30, 1986.

By the Commission: Commissioner Quello issuing a separate statement.

Introduction

1. Over the past decade, the Commission has administered three regulatory policies designed to achieve diversity in broadcast programming by fostering an increase in the number of broadcast facilities owned by minority group members and women. These policies are, first, the application of racial, ethnic, and gender preferences in comparative licensing proceedings for broadcast stations; second, the administration of the Commission's distress sale policy to permit minority acquisition of broadcast stations designated for hearing on basic qualifications issues; and third, the issuance of tax certificates for sales of broadcast properties to minorities. This proceeding was prompted by concerns as to the continuing legality of these policies as a result of the *Steele* case [1] and several recent Supreme Court cases. The Commission asked for a remand in order to determine whether a record can be established that would support the constitutionality of its preference scheme. The Commission also has decided that this is an appropriate occasion to determine whether comparative preferences, distress sales and tax certificates are appropriate as a matter of policy.

Background

A. Comparative Preference Policies for Minorities and Women

2. In a comparative licensing proceeding, the Commission selects the applicant best able to serve the public interest. *See, e.g., Johnston Broadcasting v. FCC,* 175 F.2d 351 (D.C. Cir. 1949). To make this choice, the Commission has set out standard criteria to be considered in every comparative proceeding. *See Policy Statement on Comparative Broadcast Hearings,* 1 FCC 2d 393 (1965) [hereinafter *1965 Policy Statement].*

The Commission explained in the *1965 Policy Statement* that there are two principal objectives on which it would focus in selecting among qualified applicants: (1) Best practicable service to the public; and (2) maximum diffusion of control of the media of mass communications, generally referred to as diversification, in order to maximize diversity of programming. *Id.* at 394. *See generally West Michigan Broadcasting Co. v. FCC,* 735 F.2d 601, 603-07 (D.C. Cir. 1984), *cert. denied,* 105 S. Ct. 1392 (1985). Integration of ownership and management is the single most important factor in evaluating best practicable service. Certain qualitative attributes of participating owners, such as local residence, participation in civic activities and broadcast experience have been used to enhance integration credit. *Id.* at 395-96.

3. Minority and female ownership were not specifically addressed in the *1965 Policy Statement.* Instead, the Commission's current comparative preference policies had their origin in the Court of Appeals decision in *TV 9, Inc. v. FCC,* 495 F.2d 929 (D.C. Cir. 1973), *cert denied,* 419 U.S. 986 (1974). *See also Garrett v. FCC,* 513 F.2d 1056 (D.C. Cir. 1975). In *TV-9,* the Court stated that "we hold that when minority ownership is likely to increase diversity of content, especially of opinion and viewpoint, merit should be awarded." The Court, however, reversed the Commission's decision that minority preferences should be granted only after the minority applicant demonstrated a nexus to program diversity. The court concluded that it could be assumed that minority ownership would foster program diversity when there is integration of ownership and management. It therefore found that the Commission should have awarded merit to the minority owner in *TV 9* without first requiring a demonstration of a nexus between minority ownership and increased program diversity.[2] In 1975 in *Garrett,* the court clarified its *TV 9* holding, stating that the "entire thrust of *TV 9* is that black ownership and participation together are themselves likely to bring about programming that is responsive to the needs of black citizenry and that 'reasonable expectation' without 'advance demonstration' gives them relevance." *Id* at 1063. *See also West Michigan Broadcasting Co.,* 735 F.2d at 606-616. Based on these directives from the court, the Commission concluded that minority ownership and participation should receive credit in the comparative process; it decided to treat this factor as an enhancement to the standard comparative criterion of integration of management, an element used to evaluate which competing applicant is likely to provide the best practicable service to the public. *WPIX, Inc.,* 68 FCC 2d 381 (1978).[3]

4. In a subsequent decision, the Commission's Review Board applied the preference policy to women, concluding that "merit for female ownership and participation is warranted upon essentially the same basis as the merit given for black ownership and participation, but that it is a merit of lesser significance." *Mid-Florida Television Corp.,* 69 FCC 2d 607, 652 (Rev. Bd. 1978), *set aside on other grounds,* 87 FCC 2d 203 (1981). Finding the rationale of *TV 9* and *Garrett* applicable to women as well, the Board concluded that, if it were correct to assume that minority ownership promotes diversity, then the goal of diversification of programming would by the same logic likely be furthered by a policy that gives some comparative credit for female ownership of broadcast

[1] *Steele v. FCC,* Case No. 84-1176 (D.C. Cir. *motion for remand granted* October 9, 1986).

[2] For the Commission's decision, see *Mid-Florida Television Corp.,* 33 FCC 2d 1, 17-18 (Rev. Bd.), *rev. denied,* 37 FCC 2d 559 (1972). Unless modified otherwise, references to "diversity" herein refer to program diversity.

[3] The *TV 9* opinion and supplemental opinion were careful to point out the difference between a "preference," which the court viewed as determinative *per se,* and an "enhancement" or "merit," which was not. The Commission's implementation of the *TV 9* order in the *WPIX* case was intended to observe this distinction. For ease of discussion herein, the term "preference" shall be deemed to encompass both enhancement and merit, without legal distinction.

stations, given that women, like minorities, were infrequent owners of broadcast operations. However, based on the observation that women, unlike minorities, had not been "excluded from the mainstream of society" due to prior discrimination, the merit accorded integrated female ownership is of lesser weight than that awarded minority ownership.[4] The Board followed the court's ruling in *TV 9* and did not require a showing of a nexus between female ownership and program diversity before awarding the preference.

5. Minority and female preference policies have been applied in numerous cases. In *Cannon's Point Broadcasting Co.*, 93 FCC 2d 643 (Rev. Bd. 1983), *reconsid. denied*, 94 FCC 2d 72 (Rev. Bd. 1983), *review denied*, FCC 84-161 (April 13, 1984), *appealed sub nom. Steele v. FCC*, No. 84-1176 (D.C. Cir. *motion for remand granted* October 9, 1986), a comparative application proceeding for a new FM broadcast station, the Commission's Review Board found that, between two competing applicants, neither of whom owned any other media properties and both of whom were to be sole owner-operators of the station, the woman's qualitative enhancement credits for 100% female integration and past local residence prevailed over the nonminority male applicant with an enhancement for prior broadcast experience. The Commission affirmed this decision and the losing applicant appealed, challenging the constitutionality of the female preference policy.

6. A majority of a divided three-judge panel of the Court of Appeals held that the gender preference was invalid because it exceeded the Commission's statutory authority, *Steele v. FCC*, 770 F.2d 1192, 1199 (D.C. Cir. 1985), and it reversed the Commission's decision. The majority stated that the assumptions underlying the preference policies "run counter to the fundamental constitutional principle that race, sex, and national origin are not valid factors upon which to base government policy." *Id.* at 1198. The majority added:

> [T]he Commission has been unable to offer any evidence other than statistical underrepresentation to support its bald assertion that more women station owners would increase programming diversity. Instead, a few Commission employees without any evidence, reasoning, or explanation, gratuitously decreed one day that female preferences would henceforth be awarded. . . . Presumably, the Board thought that it was a Good Idea and would lead to a Better World. Contrary to the Commission's apparent supposition, however, a mandate to serve the public interest is not a license to conduct experiments in social engineering conceived seemingly by whim and rationalized by conclusory dicta.

770 F.2d at 1199.

7. The court, *en banc*, granted a rehearing and vacated the panel opinion in an order released October 31, 1985. In a subsequent order on November 22, 1985, the court asked the parties to file supplemental briefs addressing the Commission's statutory authority to grant gender-based preferences and the constitutionality of such grants. The Commission responded with a brief that expressed its concern that both the female and minority preference policies do not at present satisfy statutory and constitutional requirements, because the Commission had never undertaken a proceeding to determine whether there is a nexus between the preference scheme and enhanced diversity, but instead had assumed such a nexus. At the same time, the Commission sought a remand so that it could conduct such a proceeding. *Steele v. FCC*, No. 84-1176 (D.C. Cir. *motion for remand filed* September 12, 1986). That motion was granted in an order released October 9, 1986.

B. Tax Certificate and Distress Sale Policies

8. Applying the reasoning of *TV 9* and in response to concerns raised in the Federal Communications Commission's Minority Ownership Task Force, *Minority Ownership Report* (1978), the Commission has adopted two additional minority ownership policies to encourage broadcasters to seek out minority purchasers. *Policy on Minority Ownership of Broadcasting Facilities*, 68 FCC 2d 979, 982-983 (1978). First, the Commission used its authority under 28 U.S.C. 1071 to grant tax certificates to assignors or transferors whose voluntary sales of their broadcast stations would increase minority ownership where it determined that "there is substantial likelihood that diversity of programming will be increased." *Id.* The Commission contemplated issuing tax certificates where minority ownership would be controlling, and it would consider issuing certificates in other cases where "minority ownership [would be] significant enough to justify the certificate in light of the purpose of the policy. . . ." *Id.* at 983 n.20.[5] Section 1071 authorizes the Commission to issue tax certificates whenever a sale of a broadcast property is found to be "necessary or appropriate to effectuate a change in policy of, or the adoption of a new policy by, the Commission with respect to ownership and control of radio broadcasting stations." Tax certificates allow the seller to defer capital gains taxation on the proceeds of the sale.

9. Second, the Commission extended its existing distress sale policy, which as originally adopted allowed incapacitated or bankrupt broadcasters to sell their stations, to include distress sales to prospective purchasers with significant minority ownership interests. *Id.* at 983. Under this policy, the Commission permits a licensee whose license or whose renewal application is designated for hearing on basic qualifications issues to transfer or assign its license to a qualified minority applicant at a distress sale price, if the sale occurs before the hearing is initiated and the parties "demonstrate how the sale would further the goals" underlying the policy. *Id.* The goals are described simply as "fostering the growth of minority ownership," *id.* at 982, because of the assumption in *TV 9* that minority ownership and participation in management can be expected to increase diversity of program content as well as diversity of control of the media. *Id.*[6]

10. The application of this distress sale policy is the subject of a pending appeal in *Shurberg Broadcasting of Hartford, Inc. v. FCC*, No. 84-1600 (D.C. Cir. *supplemental brief ordered* Sept. 18, 1986). Recognizing that the minority distress sale policy may implicate some of the same statutory and constitutional concerns as the comparative preference policy in *Steele*, the Commission asked the court to remand *Shurberg* for further Commission consideration after the Commission's Motion for Remand of the *Steele* case was granted. The Motion for Remand, filed October 23, 1986, is pending before the court.

11. The minority tax certificate policy, adopted in the same decision as the distress sale policy, was premised on

[4] *Mid-Florida, supra* at 652.

[5] *See Policy Regarding the Advancement of Minority Ownership in Broadcasting*, Gen. Docket No. 82-797, 92 FCC 2d 849 (1982), regarding the availability of tax certificates for limited partnerships and "start-up" financing.

[6] In a *Notice of Inquiry* in MM Docket No. 85-299, the Commission proposed to permit distress sales of broadcast properties to minorities after a revocation or renewal hearing has commenced, provided the transaction is entered into prior to the filing of proposed findings of fact and conclusions of law and the sale price is no more than 50 percent of the fair market value. *Distress Sale Policy for Broadcast Licenses*, 50 Fed Reg. 42047 (1985). Because the issues there will be affected by the Commission's decision in this proceeding, we will hold in abeyance our consideration of MM Docket No. 85-299 until this proceeding is concluded.

the same diversity assumption, and therefore must necessarily be addressed in the instant proceeding.

C. Commission Concerns

12. The Commission adopted its policies fostering minority ownership and applied racial and gender preferences in comparative hearings to respond to the court's mandates in *TV 9* and *Garrett, supra,* that the FCC should assume that minority ownership affects content diversity. Thus, in compliance with the court's holdings, the Commission has applied its comparative policy solely on the basis of the amount of minority or female ownership reflected in management. Likewise, the Commission, in its *Policy on Minority Ownership of Broadcasting Facilities, supra,* based its distress sale and tax certificate decisions on the nature of the minority interests, *i.e.,* whether they were controlling.

13. As indicated previously, the Supreme Court decided several cases involving affirmative action programs that may implicate the Commission's comparative preference, minority distress sale and minority tax certificate programs. *See, e.g., Wygant* v. *Jackson Board of Education,* 90 L. Ed. 2d 260 (1986); *Fullilove* v. *Klutznik,* 448 U.S. 448 (1980); *Regents of University of California* v. *Bakke,* 438 U.S. 265 (1978). *See also Mississippi University for Women* v. *Hogan,* 458 U.S. 718 (1982) ("heightened scrutiny" applied to gender-based classifications). Although these cases are primarily concerned with quota or set-aside affirmative action remedies for past discrimination,[7] collectively these cases at a minimum establish the proposition that classifications based on race or sex are inherently suspect, presumptively invalid, and subject to strict or heightened scrutiny. Because there is no factual predicate against which to apply such cases, the Commission has initiated this proceeding to reexamine its policies based on racial or gender classifications and preferences.

14. As stated previously, the purpose behind each of these policies has been to expand program diversity. We find program diversity a compelling governmental interest within the Commission's authority. Although we do not interpret the Supreme Court opinions to preclude consideration of race or gender in the licensing process under all circumstances, we do read these cases to mean that the use of minority/gender status must include a determination of whether their use is necessary and narrowly tailored to achieve their goals. The Commission's brief concluded, in response to the *Steele* court's questions, that racial or gender classifications may not be based on the assumption alone that integrated minority/female owners will result in increased content diversity. The Commission concluded, therefore, that an inquiry should be conducted to reexamine the legal and factual predicates of our policies. To this end, we seek to determine whether there is a nexus between minority/female ownership and viewpoint diversity, and whether such ownership is necessary to achieve this goal. The questions that follow are designed to elicit evidence on these points. They are also designed to focus attention on the effectiveness of these policies in achieving their intended goals and on other alternatives the Commission might or should consider. We also seek to determine whether, as a matter of policy, these preference schemes should be retained.

Specific Questions and Request for Comments

I. The Constitutionality of the Policies

15. The overarching question that must be addressed is, of course, whether the preference, distress sale, and tax certificate policies as presently constituted and administered are constitutional. In addressing this question, commenters should submit analyses of relevant case law in support of their reasoning and specific data to support their factual conclusions. In the course of this analysis, particular consideration of the questions outlined below also will be helpful.

16. The "strict scrutiny" test applied in cases involving race classifications and the heightened scrutiny test applied in gender classifications require that government actions be premised on a clearly established factual record. Furthermore, in assessing the constitutionality of race or gender-conscious remedies, courts have required that the remedy chosen be "narrowly tailored" to achieve the government's legitimate, articulated purpose. In assessing these issues, commenters should focus on the following questions.[8]

a. Is a demonstrated relationship between minority/female ownership and minority/female-oriented programming necessarily required as a matter of law to support the constitutionality of the Commission's comparative preference, distress sale, and tax certificate policies? If not, please cite relevant case law in support of this position. Are there any circumstances under which such a relationship can be presumed? On what basis? May the Commission rely upon reasonable expectation or its own export judgment on these matters, even in part? Is increased minority or female ownership in and of itself a sufficient governmental interest and does it pass constitutional muster?

b. To what extent is the relationship between integrated minority/female ownership and increased availability of minority/female perspectives and programming empirically demonstrable? Is there, for example, a demonstrable difference in the amount or nature of minority-oriented programming broadcast by minority-owned stations and that broadcast by nonminority-owned stations under similar market conditions, such as where there is a significant minority population? How should minority or female-oriented programming be defined for purposes of this analysis? Do these definitions apply to all media?

c. Is the evidence relating to the nexus between ownership and programming any different when minority and female ownership are combined with significant management roles, as is required under the comparative preference policy, as contrasted with ownership that is not integrated into management, as is permitted under the tax certificate and distress sale policies?

d. The Supreme Court precedent suggests that a higher level of scrutiny may apply to race-based classifications than to gender-based classifications. If that is true, what is the effect of this difference on the constitutionality of our policies?

17. Equal protection concerns generally require that there be no reasonable way to achieve the state's goals by means of imposing a lesser limitation on the rights of the group disadvantaged by the classification.

a. Are there effective means of achieving increased program diversity that do not require the use of race/gender classifications? For example, to what extent do market forces

[7] In *Bakke,* Justice Powell addressed the University's interest in selecting a diverse student body. 438 U.S. at 315.

[8] Commenters should be as specific as possible in presenting data supporting their responses. We encourage parties to submit original empirical studies to support their positions. Where such analyses are submitted, the methodologies employed should be described in detail. Studies submitted should attempt to control for other factors which may also affect viewpoint diversity, such as market size or demographic characteristics. We recognize, of course, that not all of these questions raise issues that are susceptible to empirical study, but for those that are, we would ask commenters to submit the best data available.

independently produce a mix of programming serving the varied needs and interests of broadcast audiences?

b. Should the Commission continue to grant preferences to minorities and women in comparative licensing proceedings, but permit nonminorities and men to overcome such preferences by making a showing that they will make an equal or superior contribution to diversity? Would this affect the constitutionality of the policy? How could such showings be made? Should the tax certificate and distress sale policies be similarly altered?

c. Should the Commission, for example, return to its original position in the *TV 9* case, under which all applicants seeking a diversity preference make individual showings to demonstrate a specific contribution to program diversity? Should this showing be open to any individual or limited to minorities and women? Should an analogous approach for distress sales and tax certificates be adopted? Is there a way for the Commission to evaluate such individual showings without having to directly analyze program content, for example, by linking any preference to demonstration of past involvement with minority/female issues which may be a more reliable indicator than race or gender *per se*?

d. If race and gender classifications are used in the Commission's ownership policies, how long should they be employed? What monitoring mechanisms should be used? What are the First Amendment ramifications of any such monitoring? If a demonstrable nexus is found, is the comparative process constitutional as presently administered? Distress sales? Tax certificates?

e. Please comment upon the Commission's present practice of granting integrated female owners an enhancement of lesser weight than that granted integrated minority owners in the comparative process. Is there an adequate constitutional basis for these gradations of enhancement? Is there a factual basis for these gradations of enhancement relevant to the Commission's public interest mandate?

Significance of Legislative History of Lottery Statute

18. In enacting the lottery licensing provisions of section 309(i) of the Communications Act in 1982, Congress explicity incorporated a mandatory minority preference scheme. In connection with that enactment and in other proceedings, Congress has made various statements that relate ownership diversity to diversity of programming and that find a substantial underrepresentation of minorities and women among owners of mass media. Parties are invited to comment on the referenced Congressional record as a basis, in constitutional terms, for Commission action in continuing to apply the subject ownership policies. We solicit comment on whether the Commission is bound by, or may rely upon, Congressional findings of constitutionality, until directed otherwise by a court, or whether the Commission must independently assess the constitutional issues.

II. Effectiveness of Current Policies and Alternatives

19. In re-evaluating the existing policies, it is necessary to ascertain the extent to which they have been effective. For this purpose, interested parties are asked to address the following questions.

a. To what extent have the subject policies resulted in minority and female ownership? Is there anything in the comparative process that acts as a barrier to the entry of minorities and women into broadcasting? In practice, have integration proposals been carried out? How long have owners benefiting from the policies continued their ownership roles? Has the number of minority and female-owned stations increased, and by how much, since the adoption of each policy? What percentage of stations have been acquired by utilizing these policies?

b. What are the major impediments to increasing minority ownership of the broadcast media? Does financing continue to be a substantial problem? To what extent is lack of information on ownership opportunities a problem? What part might the Commission play in eliminating these and other extrinsic problems?

c. What social or other costs might result from continuing these policies? Are these costs outweighted by the benefits to be derived from continuing these policies?

20. Commenters are invited to respond to the above questions and to address any other matters raised herein or that the parties deem relevant to a careful reexamination of the subject policies. We encourage parties to submit empirical evidence and hard data wherever possible to support their positions. Where such evidence or data is filed, parties should describe fully the methodology utilized in its compilation and analysis. Parties submitting comments on the constitutional issues presented in the Commission's brief in *Steele* or in this *Notice* are requested to include citations to relevant statutes and case law. Finally, we request that parties identify the question to which they are responding in their comments.

Procedural Matters

21. Authority for this *Notice of Inquiry* is contained in sections 4(i) and 303(r) of the Communications Act of 1934, as amended. Pursuant to applicable provisions set forth in §§ 1.415 and 1.419 of the Commission's Rules, interested parties may file comments on or before May 7, 1987, and reply comments on or before July 6, 1987. All submissions by parties to this proceeding or persons acting on behalf of such parties must be made in written comments, reply comments, or other appropriate pleadings. Reply comments shall be served on the person(s) who filed comments to which the reply is directed.

22. It is our intention at the conclusion of this inquiry proceeding to adopt a final policy statement. Therefore, for purposes of this nonrestricted notice of inquiry proceeding, members of the public are advised that *ex parte* contacts are permitted from the time the Commission adopts a notice of inquiry until the time a public notice is issued stating that a substantive disposition of the matter is to be considered at a forthcoming meeting or until a final order disposing of the matter is adopted by the Commission, whichever is earlier. In general, an *ex parte* presentation is any written or oral communication (other than formal written comments/pleadings and formal oral arguments) between a person outside the Commission and a Commissioner or a member of the Commission's staff which addresses the merits of the proceeding. Any person who submits a written *ex parte* presentation must serve a copy of that presentation on the Commission's Secretary for inclusion in the public file. Any person who makes an oral *ex parte* presentation addressing matters not fully covered in any previously filed written comments for the proceeding must prepare a written summary of that presentation on the day of oral presentation. That written summary must be served on the Commission's Secretary for inclusion in the public file, with a copy to the Commission official receiving the oral presentation. Each *ex parte* presentation described above must state on its face that the Secretary has been served, and must also state by docket number the proceeding to which it relates. *See generally*, § 1.1231 of the Commission's Rules, 47 CFR 1.1231. Parties are advised, however, that the specific proceedings involved in the *Steele* and *Shurberg* cases are restricted adjudicatory proceedings and remain subject to the strict *ex parte* provisions

of § 1.1203, *et seq.* of our rules, 47 CFR 1.1203, *et seq.*

23. In accordance with the provisions of § 1.419 of the Commission's Rules, an original and 5 copies of all comments, reply comments, pleadings, briefs or other documents shall be furnished to the Commission. Members of the general public who wish to participate informally in the proceeding may submit one copy of their comments, specifying the docket number in the heading. All filings in this proceeding will be available for public inspection by interested persons during regular business hours in the Commission's Public Reference Room at its headquarters, 1919 "M" Street, NW., Washington, DC 20554.

24. In view of the fact that we have asked the court to remand the *Steele* case, because of doubts as to the constitutionality of the minority and female enhancement credits, and more particularly, in view of the fact that we are holding that case in abeyance pending completion of this proceeding, we believe it might be arbitrary and capricious to continue to award licenses in other comparative licensing proceedings where the effect of such credits is dispositive. We, therefore, are directing administrative law judges to make findings as to all issues in dispute, including entitlement to a racial/gender preference, and to hold in abeyance all decisions where such credits are dispositive. We see no need, however, to delay action on cases the outcome of which would not be affected by awards of such preferences. Thus, an administrative law judge hearing a comparative licensing case in which a minority/female credit is claimed should make findings and reach conclusions based on application of these credits and, in the alternative, should determine which applicant would prevail if the credits were disallowed. If the credit would not be dispositive, the case should be decided. If, on the other hand, award of the credit would be dispositive, the case should be held in abeyance pending final resolution of this proceeding. The Review Board and Office of General Counsel are also directed to hold in abeyance any cases within their purview where such credits are dispositive.

25. Similarly, because the Commission has requested that the Court of Appeals remand *Shurberg* for reconsideration, and is now holding that application in abeyance pending completion of this docket, the Mass Media Bureau will hold in abeyance all other pending or future applications for distress sales pursuant to the minority ownership policy until such time as a decision in the *Shurberg* proceeding has become final. In the event the Court decides not to grant a remand, applications should be held until the court disposes of the case on the merits; in the event a remand is granted, applications should be held pending the final resolution of this proceeeding.

26. Although the Commission's tax certificate policy raises some of the same questions as the award of race or gender-based credits in comparative licensing proceedings and the grant of distress sale relief, the Commission has not been presented with a specific case challenging that policy and has had no occasion to consider the validity of that policy. Unlike the comparative preference and distress sale cases, no specific tax certificate application is being held in abeyance. Therefore, we are not constrained by the same equitable considerations present in comparative licensing and distress sale cases to hold pending and future tax certificate requests in abeyance. Accordingly, in the event an application for a tax certificate is filed,[9] the Bureau, unless otherwise directed by the Commission, should process the request and grant the tax certificate, if warranted.

27. Accordingly, It Is Ordered, That in all comparative licensing cases where a racial, ethnic or gender preference would be awarded in the absence of concerns as to the constitutionality of those preferences, the presiding administrative law judge (after having made findings as to all disputed issues of fact), the Review Board, or the Office of the General Counsel, as the case may be, Shall Determine whether award of the preference would be dispositive of the outcome of the proceeding and, if so, Shall Defer action on such cases pending final resolution of this proceeding.

28. It Is Further Ordered, That the Mass Media Bureau Shall Hold In Abeyance all applications for preferential treatment under the Commission's distress sale policy pending the earlier of (a) a final judicial determination upholding the validity of the distress sale policy or (b) the final resolution of this proceeding.

[9] At the moment, there are no pending requests for issuance of tax certificates premised on the sale of licensed facilities to a minority or minority-controlled group.

Federal Communications Commission.

William J. Tricarico,

Secretary.

Separate Statement by Commissioner James H. Quello

December 17, 1986.

Re: Inquiry into the Commission's Comparative Licensing, Distress Sales and Tax Certificate Policies.

Today the Commission launches an inquiry into its comparative licensing, distress sales and tax certificate policies. The primary focus of this inquiry is on the legality of those policies. However, the Commission has also decided that this is an appropriate occasion to assess the success of those policies during the eight years since their adoption. I support these efforts because I believe that both are necessary and proper concerns to the Commission's fulfillment of its public interest obligations.

As I have emphasized before, I remain committed to the Commission's longstanding goal of encouraging and assisting minority and female entry into broadcasting. I have also stated, on other occasions, that I am not inclined to question the wisdom of continuing our minority policies if they are constitutional. To the extent that this Notice of Inquiry contains conclusory statements relating to the legality of our policies, I am not necessarily in accord with those statements and will reserve judgment until I have a record before me. I cannot quarrel, however, with my colleagues' desire to seek comment on whether these policies are indeed accomplishing the worthy objectives that they were designed to achieve. I do, however, place a heavy burden on those that challenge either the constitutionality or the wisdom of our longstanding Commission policy of minority preferences. I intend to study this record very closely before reaching any conclusions on these sensitive issues.

[FR Doc. 87-147 Filed 1-6-87; 8:45 am]

BILLING CODE 6712-01-M

FEDERAL DEPOSIT INSURANCE CORPORATION

Information Collection Submitted to OMB for Review

AGENCY: Federal Deposit Insurance Corporation.

ACTION: Notice of information collection submitted to OMB for review and approval under the Paperwork Reduction Act of 1980.

Title of Information Collection: Consolidated Reports of Income and Condition (Insured State-Charted Savings Banks) (OMB No. 3064–0054).

Background: In accordance with requirements of the Paperwork Reduction Act of 1980 (44 U.S.C. Chapter 35), the FDIC hereby gives notice that it has submitted to the Office of Management and Budget a request for OMB review for the information collection system identified above.

ADDRESSES: Written comments regarding the submission should be addressed to Robert Neal, Office of Information and Regulatory Affairs, Office of Management and Budget, Washington, DC 20503, and to John Keiper, Assistant Executive Secretary (Administration), Federal Deposit Insurance Corporation, Washington, D.C. 20429.

Comments: Comments on this collection of information should be submitted on or before January 22, 1987.

FOR FURTHER INFORMATION CONTACT: Requests for a copy of the submission should be sent to John Keiper, Assistant Executive Secretary (Administration), Federal Deposit Insurance Corporation, Washington, DC 20429, telephone (202) 898–3810.

SUMMARY: The FDIC is submitted for OMB review changes to the Consolidated Reports of Income and Condition (Call Reports) filed quarterly by insured state-chartered savings banks. This request is being made because of the recent passage of the Tax Reform Act of 1986. Provisions of that statute will affect the tax treatment of certain bank assets and expenses and the types of such assets banks may tend to acquire. As a result of the proposed changes it is estimated that 57,623 hours will be sent annually by insured state-chartered savings banks, collectively, in preparing Call Reports.

Dated: December 31, 1986.

Federal Deposit Insurance Corporation.

Hoyle L. Robinson,

Executive Secretary.

[FR Doc. 87–209 Filed 1–6–87; 8:45 am]

BILLING CODE 6714–01–M

FEDERAL RESERVE SYSTEM

The Bank of Tokyo, Ltd.; Application To Engage de Novo in Permissible Nonbanking Activities

The company listed in this notice has filed an application under § 225.23(a)(1) of the Board's Regulation Y (12 CFR 225.23(a)(1)) for the Board's approval under section 4(c)(8) of the Bank Holding Company Act (12 U.S.C. 1843(c)(8)) and § 225.21(a) of Regulation Y (12 CFR 225.21(a)) to commence or to engage *de novo,* either directly or through a subsidiary, in a nonbanking activity that is listed in § 225.25 of Regulation Y as closely related to banking and permissible for bank holding companies. Unless otherwise noted, such activities will be conducted throughout the United States.

The application is available for immediate inspection at the Federal Reserve Bank indicated. Once the application has been accepted for processing, it will also be available for inspection at the offices of the Board of Governors. Interested persons may express their views in writing on the question whether consummation of the proposal can "reasonably be expected to produce benefits to the public, such as greater convenience, increased competition, or gains in efficiency, that outweigh possible adverse effects, such as undue concentration of resources, decreased or unfair competition, conflicts of interests, or unsound banking practices." Any request for a hearing on this question must be accompanied by a statement of the reasons a written presentation would not suffice in lieu of a a hearing, identifying specifically any questions of fact that are in dispute, summarizing the evidence that would be presented at a hearing, and indicating how the party commenting would be aggrieved by approval of the proposal.

Unless otherwise noted, comments regarding the application must be received at the Reserve Bank indicated or the offices of the Board of Governors not later than January 14, 1987.

A. **Federal Reserve Bank of New York** (William L. Rutledge, Vice President) 33 Liberty Street, New York, New York 10045:

1. *The Bank of Tokyo, Ltd.,* Tokyo, Japan; to engage *de novo* through its subsidiary, BOT Securities, Inc., New York, New York;, in underwriting, dealing in and brokering obligations of the United States, general obligations of states and their political subdivisions, and other obligations that state member banks of the Federal Reserve System may be authorized to underwrite and deal in under 12 U.S.C. 24 and 335, including bankers' acceptances and certificates of deposit, and, as an incident thereto employing hedging devices to manage rate risk.

Board of Governors of the Federal Reserve System, December 23, 1986.

James McAfee,

Associate Secretary of the Board.

[FR Doc. 87–358 Filed 1–6–87; 8:45 am]

BILLING CODE 6210–01–M

John Massey; Change in Bank Control Notice; Acquisition of Banks or Bank Holding Companies

The notificant listed below has applied under the Change in Bank Control Act (12 U.S.C. 1817(j)) and § 225.41 of the Board's Regulation Y (12 CFR 225.41) to acquire a bank or bank holding company. The factors that are considered in acting on notices are set forth in paragraph 7 of the Act (12 U.S.C. 1817(j)(7)).

The notices are available for immediate inspection at the Federal Reserve Bank indicated. Once the notices have been accepted for processing, they will also be available for inspection at the offices of the Board of Governors. Interested persons may express their views in writing to the Reserve Bank indicated for that notice or to the offices of the Board of Governors. Comments must be received not later than January 15, 1987.

A. **Federal Reserve Bank of Kansas City** (Thomas M. Hoenig, Vice President) 925 Grand Avenue, Kansas City, Missouri 64198:

1. *John Massey,* Massey Management Company, Inc. Employees' Pension Trust, Massey Management Company, Inc. Employees' Profit Sharing Trust, and Massey Investment Company, all of Durant, Oklahoma; to acquire 28.60 percent of the voting shares of Durant Bancorp, Inc., Durant, Oklahoma, and thereby indirectly acquire Durant Bank and Trust Company, Durant, Oklahoma.

Board of Governors of the Federal Reserve System, December 23, 1986.

James McAfee,

Associate Secretary of the Board.

[FR Doc. 87–359 Filed 1–6–87; 8:45 am]

BILLING CODE 6210–01–M

Old Town Bancshares Corp.; Formation of, Acquisition by, or Merger of Bank Holding Companies

The company listed in this notice has applied for the Board's approval under section 3 of the Bank Holding Company Act (12 U.S.C. 1842) and § 225.14 of the Board's Regulation Y (12 CFR 225.24) to become a bank holding company or to acquire a bank or bank holding company. The factors that are considered in acting on the applications are set forth in section 3(c) of the Act (12 U.S.C. 1842(c)).

The application is available for immediate inspection at the Federal Reserve Bank indicated. Once the application has been accepted for processing, it will also be available for inspection at the offices of the Board of

Governors. Interested persons may express their views in writing to the Reserve Bank indicated for that application or to the offices of the Board of Governors. Any comment on an application that requests a hearing must include a statement of why a written presentation would not suffice in lieu of a hearing, identifying specifically any questions of fact that are in dispute and summarizing the evidence that would be presented at a hearing.

Comments regarding this application must be received not later than January 15, 1987.

A. **Federal Reserve Bank of Boston** (Robert M. Brady, Vice President) 600 Atlantic Avenue, Boston, Massachusetts 02106:

1. *Old Town Bancshares Corp.*, Abington, Massachusetts; to become a bank holding company by acquiring 100 percent of the voting shares of The Abington National Bank, Abington, Massachusetts.

Board of Governors of the Federal Reserve System, December 23, 1986.

James McAfee,

Associate Secretary of the Board.

[FR Doc. 87-360 Filed 1-6-87; 8:45 am]

BILLING CODE 6210-01-M

Merchants National Corp. et al.; Formations of; Acquisitions by; and Mergers of Bank Holding Companies

The companies listed in this notice have applied for the Board's approval under section 3 of the Bank Holding Company Act (12 U.S.C. 1842) and § 225.14 of the Board's Regulation Y (12 CFR 225.14) to become a bank holding company or to acquire a bank or bank holding company. The factors that are considered in acting on the applications are set forth in section 3(c) of the Act (12 U.S.C. 1842(c)).

Each application is available for immediate inspection at the Federal Reserve Bank indicated. Once the application has been accepted for processing, it will also be available for inspection at the offices of the Board of Governors. Interested persons may express their views in writing to the Reserve Bank or to the offices of the Board of Governors. Any comment on an application that requests a hearing must include a statement of why a written presentation would not suffice in lieu of a hearing, identifying specifically any questions of fact that are in dispute and summarizing the evidence that would be presented at a hearing.

Unless otherwise noted, comments regarding each of these applications must be received not later than January 26, 1987.

A. **Federal Reserve Bank of Chicago** (Franklin D. Dreyer, Vice President) 230 South LaSalle Street, Chicago, Illinois 60690:

1. *Merchants National Corporation*, Indianapolis, Indiana; to merge with Fayette Bancorp, Connersville, Indiana, and thereby indirectly acquire Fayette Bank & Trust Company, Connersville, Indiana.

B. **Federal Reserve Bank of Kansas City** (Thomas M. Hoenig, Vice President) 925 Grand Avenue, Kansas City, Missouri 64198:

1. *Weatherford Bancorporation, Inc.*, Weatherford, Oklahoma; to become a bank holding company by acquiring 99.9 percent of the voting shares of United Community Bank, Weatherford, Oklahoma. Comments on this application must be received by January 23, 1987.

Board of Governors of the Federal Reserve System, December 31, 1986.

James McAfee,

Associate Secretary of the Board.

[FR Doc. 87-203 Filed 1-6-87; 8:45 am]

BILLING CODE 6210-01-M

United Security Bancorporation; Application To Engage de Novo in Permissible Nonbanking Activities

The company listed in this notice has filed an application under § 225.23(a)(1) of the Board's Regulation Y (12 CFR 225.23(a)(1)) for the Board's approval under section 4(c)(8) of the Bank Holding Company Act (12 U.S.C. 1843(c)(8)) and § 225.21(a) of Regulation Y (12 CFR 225.21(a)) to commence or to engage *de novo*, either directly or through a subsidiary, in a nonbanking activity that is listed in § 225.25 of Regulation Y as closely related to banking and permissible for bank holding companies. Unless otherwise noted, such activities will be conducted throughout the United States.

The application is available for immediate inspection at the Federal Reserve Bank indicated. Once the application has been accepted for processing, it will also be available for inspection at the offices of the Board of Governors. Interested persons may express their views in writing on the question whether consummation of the proposal can "reasonably be expected to produce benefits to the public, such as greater convenience, increased competition, or gains in efficiency, that outweigh possible adverse effects, such as undue concentration of resources, decreased or unfair competition, conflicts of interests, or unsound banking practices." Any request for a hearing on this question must be accompanied by a statement of the reasons a written presentation would not suffice in lieu of a hearing, identifying specifically any questions of fact that are in dispute, summarizing the evidence that would be presented at a hearing, and indicating how the party commenting would be aggrieved by approval of the proposal.

Unless otherwise noted, comments regarding the application must be received at the Reserve Bank indicated or the offices of the Board of Governors not later than January 26, 1987.

A. **Federal Reserve Bank of San Francisco** (Harry W. Green, Vice President) 101 Market Street, San Francisco, California 94105:

1. *United Security Bancorporation*, Chewelah, Washington; to engage *de novo* through its subsidiary, USB Insurance Services, Chewelah, Washington, in general insurance agency activities in a place where Applicant or a subsidiary of Applicant has a lending office and that has a population of under 5,000 pursuant to § 225.25(b)(8)(iii) of the Board's Regulation Y.

Board of Governors of the Federal Reserve System, December 31, 1986.

James McAfee,

Associate Secretary of the Board.

[FR Doc. 87-202 Filed 1-6-87; 8:45 am]

BILLING CODE 6210-01-M

FEDERAL RETIREMENT THRIFT INVESTMENT BOARD

Employee Thrift Advisory Council; Open Meeting

In accordance with section 10(a)(2) of the Federal Advisory Committee Act (Pub. L. 92-463), a notice is hereby given of the following committee meeting:

Name: Employee Thrift Advisory Council
Time and Date: 1:30 p.m., January 23, 1987
Place: Conference Room 5141-A, General Services Administration Building 18th and F Streets NW., Washington, DC 20405
Status: Open.

Matters to be Considered: This first meeting of the Thrift Advisory Council will be an introductory and organizational meeting with the members of the Board and the Executive Director and will include a presentation by the Executive Director of the progress to date in establishing the Thrift Savings Plan.

Any interested person may attend, appear before, or file statements with the Council. For further information contact John O'Meara on (202) 653-2573.

Dated: January 2, 1987.

Francis X. Cavanaugh,

Executive Director.

[FR Doc. 87-251 Filed 1-6-87; 8:45 am]

BILLING CODE 6820-5B-M

DEPARTMENT OF HEALTH AND HUMAN SERVICES

Food and Drug Administration

Public Workshop; Surrogate Testing for Non-A, Non-B Hepatitis; Anti-HBc and ALT Testing

AGENCY: Food and Drug Administration.

ACTION: Notice.

SUMMARY: The Food and Drug Administration (FDA) is announcing a forthcoming public workshop to discuss surrogate testing for non-A, non-B hepatitis, specifically, anti-hepatitis B core (Anti-HBc) and alanine aminotransferase (ALT) testing.

DATES: The workshop will be held on January 20 and 21, 1987, 8:30 a.m.

ADDRESS: The workshop will be held at the Masur Auditorium, The Clinical Center, Bldg. 10, National Institutes of Health, 9000 Rockville Pike, Bethesda, MD.

FOR FURTHER INFORMATION CONTACT: Linda A. Smallwood, Center for Drugs and Biologics (HFN-830), Food and Drug Administration, 8800 Rockville Pike, Bethesda, MD 20892, 301-496-4288.

SUPPLEMENTARY INFORMATION: The workshop is being sponsored by FDA's Center for Drugs and Biologics, Office of Biologics Research and Review.

The topics will include: Non-A, non-B hepatitis, an overview of the public health problem; epidemiology of the disease, evaluation and analysis of the surrogate tests; current testing experience; and implications for donors and blood product recipients (legal, ethical, and medical).

The workshop will be open to the public. No registration is required.

Dated: December 31, 1986.

John M. Taylor,

Associate Commissioner for Regulatory Affairs.

[FR Doc. 87-200 Filed 1-6-87; 8:45 am]

BILLING CODE 4160-01-M

[Docket No. 86N-0445]

Quality Standards for Foods With no Identity Standards; Bottled Water

AGENCY: Food and Drug Administration.

ACTION: Notice.

SUMMARY: The Food and Drug Administration (FDA), because of current legal proceedings involving the Environmental Protection Agency (EPA) and its regulation of fluoride levels in public drinking water systems, is announcing that it will not issue regulations or amendments concerning fluoride in bottled drinking water until such time as those issues regarding EPA's regulation of fluoride are resolved. EPA recently promulgated regulations establishing Maximum Contaminant Levels for fluoride in public drinking water systems. Under the Federal Food, Drug, and Cosmetic Act (the act), FDA is required, whenever EPA prescribes interim or revised national primary drinking water regulations, to either promulgate amendments to regulations applicable to bottled drinking water or publish in the **Federal Register** reasons for not making such amendments.

FOR FURTHER INFORMATION CONTACT: Kennon Smith, Center for Food Safety and Applied Nutrition (HFF-312), Food and Drug Administration, 200 C St. SW., Washington, DC 20204, 202-485-0162.

SUPPLEMENTARY INFORMATION: Under section 410 of the act (21 U.S.C. 349), FDA is required, whenever EPA prescribes interim or revised national primary drinking water regulations under section 1412 of Title XIV of the Public Health Service Act (The Safe Drinking Water Act), to consult with EPA and within 180 days after EPA promulgates the drinking water regulations to "either promulgate amendments to regulations under this chapter applicable to bottled drinking water or publish in the **Federal Register** * * * reasons for not making such amendments."

In the **Federal Register** of April 2, 1986 (51 FR 11396; corrected July 3, 1986 (51 FR 24328)), EPA published a National Revised Drinking Water Regulation establishing a Maximum contaminant Level of 4.0 milligrams per liter for fluoride to protect the public health. In that same **Federal Register** document, EPA published a National Secondary Drinking Water Regulation establishing a Secondary Maximum Contaminant Level of 2.0 milligrams per liter for fluoride to protect the public welfare.

Although FDA began consideration of issues concerning fluoride levels in bottled drinking water, the current legal proceedings involving EPA and its regulation of fluoride in public drinking water systems make it inappropriate at this time for FDA to issue a regulatory response to EPA's recently promulgated drinking water regulations. Therefore, FDA is announcing that it will not issue regulations or amendments concerning fluoride in bottled drinking water until all related issues raised in current legal proceedings or EPA's regulation of fluoride in public drinking water systems are finally resolved.

Dated: December 31, 1986.

John M. Taylor,

Associate Commissioner for Regulatory Affairs.

[FR Doc. 87-198 Filed 1-6-87; 8:45 am]

BILLING CODE 4160-01-M

Health Resources and Services Administration

Advisory Committees; Meetings

In accordance with section 10(a)(2) of the Federal Advisory Committee Act (Pub. L. 92-463), announcement is made of the following National Advisory bodies scheduled to meet during the month of January 1987:

Name: National Advisory Council on Health Professions Education.

Date and Time: January 21 and January 23, 1987, 9:00 a.m.

Place: Conference Room E, Parklawn Building, 5600 Fishers Lane, Rockville, Maryland 20857.

Open on January 21, 9:00 a.m.-5:00 p.m.

Closed on January 23, 9:00 a.m.-5:00 p.m.

Purpose: The Council advises the Secretary with respect to the administration of programs of financial assistance for the health professions and makes recommendations based on its review of applications requesting such assistance. This also involves advice in the preparation of regulations with respect to policy matters.

Agenda: The open portion of the meeting will cover: welcome and opening remarks; report of the Director, Bureau of Health Professions, a Presentation on Issues and Strategies for Revitalizing Health Professions Education for Minorities and the Disadvantaged; a presentation on manpower needs and opportunities in Podiatry and in Optometry and future agenda items. The meeting will be closed to the public on January 23, 1987, for the remainder of the meeting for the review of grant application for Family Medicine Residency Training, Area Health Education Centers and Special Initiatives in Podiatric Medicine Training. The Closing is in accordance with the provisions set forth in section 552b(c)(6), Title 5, U.S. Code, and the Determination by the Administrator, Health Resources and Services Administration, pursuant to Pub. L. 92-463.

Anyone wishing to obtain a roster of members, minutes of meetings, or other relevant information should write to or contact Mr. Robert L. Belsley, Executive Secretary, National Advisory Council on Health Professions Education, Bureau of Health Professions, Health Resources and Services Administration, Room 8C-22, Parklawn Building, 5600 Fishers Lane,

Rockville, Maryland 20857, Telephone (301) 443-6880.

Name: National Advisory Council on Nurse Training.

Date and Time: January 21 and January 23, 1987, 9:00 a.m.

Place: Chesapeake Room, Parklawn Building, 3rd Floor, B Wing, 5600 Fishers Lane, Rockville, Maryland 20857.

Open January 21, 1987, 9:00 a.m. to 12:30 p.m.

Closed for remainder of meeting.

Purpose: The Council advises the Secretary and Administrator, Health Resources and Services Administration, concerning general regulations and policy matters arising in the administration of Title XXVII, National Health Service Corps, Health Professions Education, Nurse Training Omnibus Budget Reconciliation Act of 1981 (Pub. L. 97-35). The Council also performs final review of grant applications for Federal assistance, and makes recommendations to the Administrator, HRSA.

Agenda: Agenda items for the open portion of meeting will cover announcements; consideration of minutes of previous meeting; reports by the Director, Bureau of Health Professions (BHPr.), the Director, Division of Nursing, and staff reports. The meeting will be closed to the public on January 21 at 12:30 p.m. to 5:00 p.m.; and 9:00 a.m. to 5:00 p.m. on January 23 for the review of grant applications for Advanced Nurse Education applicants, Nurse Practitioner applications, and Special Project Grants applications. The closing is in accordance with the provision set forth in section 552b(c)(6), Title 5, U.S. Code and the Determination by the Administrator, Health Resources and Services Administration, pursuant to section 10(d) of Pub. L. 92-463.

Anyone wishing to obtain a roster of members, minutes of meeting, or other relevant information should write to or contact Dr. Mary S. Hill, Bureau of Health Professions, Health Resources and Services Administration, Room 5C-04, Parklawn Building, 5600 Fishers Lane, Rockville, Maryland 20857, Telephone (301) 443-6193.

Name: Joint meeting of the National Advisory Council on Health Professions Education and the National Advisory Council on Nurse Training.

Date and Time: Thursday, January 22, 1987, 9:00 a.m.

Place: Room 800, Hubert Humphrey Building, 200 Independence Avenue, SW., Washington, DC 20211.

The entire meeting is open.

Purpose: The Councils advise the Secretary concerning general regulations and policy matters arising in the administration of Title VII and VIII of the Public Health Service Act. The Council also preform final reviews of grant applications for Federal assistance and make recommendations to the Secretary.

Agenda: The morning session will cover administrative reports and exploration of special health problems of concern to Health Resources and Services Administration including AIDS, Organ Transplants and Nutrition, Fitness and Substance Abuses. The afternoon session will address Changing Directions in Delivery of Health Services: Implications for Clinical Education of Health Professionals.

Agenda items are subject to change as priorities dictate.

Dated: December 30, 1986.

Jackie E. Baum,

Advisory Committee Management Officer, HRSA.

[FR Doc. 87-357 Filed 1-6-87; 8:45 am]

BILLING CODE 4160-15-M

Public Health Service

Requirements for Certain Group Health Plans for Certain State and Local Government Employees—Continuation Coverage

AGENCY: Public Health Service (PHS), HHS.

ACTION: Notice

SUMMARY: This notice contains information about the recently enacted Title XXII of the PHS Act. Title XXII requires that certain State and local employers provide certain employees and their family members the opportunity to continue health care coverage under a group health plan in certain instances where coverage under the plan would otherwise be terminated.

DATE: As provided by law, the continuation of coverage requirement is effective for group health plan years beginning on/after July 1, 1986. A different effective date may apply for group health plans maintained pursuant to collective bargainning agreements. See the discussion under Supplementary Information, below.

FOR FURTHER INFORMATION CONTACT: Theodore J. Roumel, Chief, Grants Management Branch, PHS, Room 17A-45, 5600 Fishers Lane, Rockville, Maryland 20857, Telephne (301) 443-1874.

SUPPLEMENTARY INFORMATION: On April 7, 1986, the Consolidated Omnibus Budget Reconciliation Act of 1985 (COBRA) was signed into law (Pub. L. 99-272). Title X of COBRA amends the PHS Act, the Internal Revenue Code, and Title I of the Employee Retirement Income Security Act of 1974 (ERISA) to require that group health plans of covered employers provide employees and certain family members the opportunity to continue health care coverage under the plan at group rates in certain instances where coverage under the group health plan would otherwise be terminated.

The amendments in Title X of COBRA enacted a new Title XXII as part of the PHS Act, with provisions substantially similar to those in amendments to the Internal Revenue Code and ERISA. Under the Title X amendments, the Internal Revenue Service, the Department of Health and Human Services and the Department of Labor each have regulatory authority. In this regard, the Conference Report accompanying CORBA states:

> To avoid the issuance of duplicate and perhaps inconsistent regulations, the conferees authorized the Secretary of Labor to promulgate regulations implementing the disclosure and reporting requirements, and the Secretary of the Treasury to issue regulations defining required coverage deductions, and income inclusions. The Secretary of Health and Human Service is to issue regulations regarding the requirement that State and local governments provide continuation coverage for qualified beneficiaries. The conferees intend that any regulations issued by the Secretary of Health and Human Services will conform (in terms of actual requirements) with those regulations issued by the Secretary of the Treasury and Labor.

H.R. Rep. 453, 99th Cong., 1st Sess. (December 18, 1985) pp. 562-63.

The continuation coverage amendments set forth in Title X of COBRA apply, in the case of a non-collectively bargained plan, to plan years beginning on or after July 1, 1986. In the case of collectively bargained plans, the amendments do not apply to plan years beginning before the later of (1) the date on which the last collective bargaining agreement relating to the plan terminates (determined without regard to any extension thereof to after April 7, 1986), or (2) January 1, 1987. (Section 10003(b) of COBRA.)

The Conference Report further states that "pending the promulgation of regulations, employers are required to operate in good faith compliance with a reasonable interpretation of these substantive rules, notice requirements, etc." H.R. Rep. No. 453, at 563.

This Department intends to issue regulations under Title XXII as expeditiously as possible. However, because of the statutory provisions establishing effective dates and the Conference Report discussion of "good faith compliance" pending promulgation of regulations, the interim guidance of this notice becomes necessary.

The Department of Labor has issued its own interim guidance under the amendments to ERISA made by Title X of COBRA. On June 26, 1986, the Department of Labor issued ERISA Technical Release No. 86-2, focusing primarily on the disclosure and reporting requirements set forth in the ERISA amendments. Consistent with the Conference Report, this Department is adopting, in this notice, the guidance contained in ERISA Technical Release No. 86-2.

Section 10003(c) of COBRA requires that group health plans maintained by State and local governments that are subject to section 2201 of the PHS Act must notify each covered employee and his or her spouse (if any) of their continuation of coverage rights under the new Title XXII at such time as the plan becomes subject to Title XXII under the effective date provisions described above. Similarly, section 2206 of the PHS Act requires such notification for each new employee and the spouse of such employee (if any) at the time of commencement of coverage under the plan. The Department is aware that many plans will be affected by this notice requirement on or shortly after July 1, 1986, and the Department has received many requests for guidance from employers seeking to comply in good faith with this notification requirement.

The Department of Labor has prepared a model notice for the corresponding notification requirements under the ERISA amendments. We have adapted this notice for purposes of Title XXII. This Department will consider that the use of the model notice appended to this notice will demonstrate good faith compliance with a reasonable interpretation of the general notice requirement in Title X of COBRA and section 2206 of the PHS Act in the absence of regulations in this area. The model notice is designed to allow for insertion of names of the employer, plan, and plan administrator. Further, a bracketed sentence is provided for inclusion if the group health plan provides a conversion option which is made available to qualifying beneficiaries under section 2202(5).

The Department will also consider that an employer or a plan administrator has made a good faith effort at compliance in the absence of regulations if this notice is furnished to each covered employee and his or her spouse (if any) by first class mail to the covered employee's last known address. Where the spouse's last known address is the same as the covered employee's, the Department will consider a single mailing addressed to both the employee and the spouse to be in good faith compliance with these provisions. Special bracketed language is included in the model notice for use when a single mailing to both the employee and spouse is used. Where the employer (or plan administrator) determines that the spouse of a covered employee does not reside at the covered employee's last known address, good faith compliance will be achieved by a separate, first-class mailing to the spouse at his or her last known address.

It is not the Department's position that this model notice represents the only method for achieving good faith compliance with a reasonable interpretation of the general notification requirement. Such a determination must be made on a case-by-case basis in light of all relevant circumstances. However, it is the Department's intention that this model notice will provide State and local employers seeking good faith compliance in the absence of regulations in this area with a method for meeting this general notification requirement.

State and local employers and employees and their family members are cautioned, however, that neither this notice nor the model statement represents authority with respect to issues within the regulatory jurisdiction of the Department of the Treasury or the Department of Labor. Thus, to the extent that either document reflects a position on any such issue, that document should not be relied on.

This Department is also taking advantage of this opportunity to clarify an issue regarding the applicability to Title XXII. Section 2201(a) provides that the continuation coverage requirement applies to States that receive funds under the PHS Act, to their political subdivisions and to agencies or instrumentalities of such States and their political subdivisions. Accordingly, if a political subdivision does not receive PHS Act funds itself, it is nevertheless subject to Title XXII if it is located in a State that receives such funds. Except from the coverage of Title XXII are group health plans maintained by State and local governmental entities that employ fewer than 20 employees and group health plans maintained by the government of the District of Columbia or any territory or possession of the United States or any of its agencies or instrumentalities. (Section 2201(b).)

Dated: September 23, 1986.

Robert E. Windom,

Assistant Secretary for Health.

Approved: December 1, 1986.

Otis R. Brown,

Secretary.

Appendix—Model Statement—Continuation Coverage

*Very Important Notice**

On April 7, 1986, a new Federal law was enacted (Pub. L. 99–272, Title X) requiring that most State and local governments sponsoring group health plans offer employees and their families the opportunity for a temporary extension of health coverage (called "continuation coverage") at group rates in certain instances where coverage under the plan would otherwise end. This notice is intended to inform you, in a summary fashion, of your rights and obligations under the continuation coverage provision of the new law. [Both you and your spouse should take the time to read this notice carefully.]

If you are an employee of [employer's name] covered by [Group Health Plan Name], you have a right to choose this continuation coverage if you lose your group health coverage because of a reduction in your hours of employment or the termination of your employment (for reasons other than gross misconduct on your part).

If you are the spouse of an employee covered by [Group Health Plan Name], you have the right to choose continuation coverage for yourself if you lose group health coverage under [Group Health Plan Name] for *any* of the following four reasons:

(1) The death of your spouse;

(2) A termination of your spouse's employment (for reasons other than gross misconduct) or reduction in your spouse's hours of employment;

(3) Divorce or legal separation from your spouse; or

(4) Your spouse becomes entitled to Medicare benefits.

In the case of a dependent child of an employee covered by [Name of Group Health Plan], he or she has the right to continuation coverage if group health coverage under [Name of Group Health Plan] is lost for *any* of the following five reasons:

(1) The death of a parent;

(2) The termination of a parent's employment (for reasons other than gross misconduct) or reduction in a parent's hours of employment with [Name of Employer];

(3) Parents' divorce or legal separation;

(4) A parent becomes entitled to Medicare benefits; or

(5) The dependent ceases to be a "dependent child" under [Name of Group Health Plan].

Under the new law, the employee or a family member has the responsibility to inform [Name of Plan Administrator] of a divorce, legal separation, or a child losing dependent status under [Name of Group Health Plan]. [Name of Employer] has the responsibility to notify [Name of Plan Administrator] of the employee's death, termination of employment or reduction in hours, or entitlement to Medicare benefits.

When [Name of Plan Administrator] is notified that one of these events has

happened, [Name of Plan Administrator] will in turn notify you that you have the right to choose continuation coverage. Under the new law, you have at least 60 days from the date you would lose coverage because of one of the events described above to inform [Name of Plan Administrator] that you want continuation coverage.

If you do not choose continuation coverage, your group health insurance coverage will end.

If you choose continuation coverage, [Name of Employer] is required to give you coverage which, as of the time coverage is being provided, is identical to the coverage provided under the plan to similarly situated employees or family members. The new law requires that you be afforded the opportunity to maintain continuation coverage for 3 years unless you lost group health coverage because of a termination of employment or reduction in hours. In that case, the required continuation coverage period is 18 months. However, the new law also provides that your continuation coverage may be cut short for *any* of the following five reasons:

(1) [Name of Employer] no longer provides group health coverage to any of its employees;

(2) The premium for your continuation coverage is not paid;

(3) You become an employee covered under another group health plan;

(4) You become entitled to Medicare benefits; and

(5) You were previously married to a covered employee and subsequently remarry and are covered under your new spouse's group health plan.

You do not have to show that you are insurable to choose continuation coverage. However, under the new law, you may have to pay all or part of the premium for your continuation coverage. [The new law also says that, at the end of the 18 month or 3 year continuation coverage period, you must be allowed to enroll in an individual conversion health plan provided under [Name of Group Health Plan].]

This new law aplied to [Name of Group Health Plan] beginning on [applicable dated under section 10003(b) of COBRA]. If you have any questions about the new law, please contact [Plan Administrator name and business address]. Also, if you have changed marital status, or you or your spouse have changed addresses, please notify [Plan Administrator] at the above address.

[FR Doc. 87-277 Filed 1-6-87; 8:45 am]

BILLING CODE 4160-17-M

DEPARTMENT OF THE INTERIOR

Bureau of Indian Affairs

Water Charges and Related Information on the Fort Hall Irrigation Project, Idaho

This notice of proposed operation and maintenance rates and related information is published under the authority delegated to the Assistant Secretary—Indian Affairs by the Secretary of the Interior in 230 DM 1 and delegated by the Assistant Secretary—Indian Affairs to the Area Director in 10 BIAM 3.

This notice is given in accordance with § 171.1(e) of Part 171, Subchapter H, Chapter I, of Title 25 of the Code of Federal Regulations, which provide for the Area Director to fix and announce the rates for annual operation and maintenance assessments and related information of the Fort Hall Irrigation Project for Calendar Year 1987 and subsequent years. This notice is proposed pursuant to the authority contained in the Acts of March 1, 1907 (34 Stat. 1024), and August 31, 1954 (68 Stat. 1026).

The purpose of this notice is to announce an increase in the Fort Hall Project assessment rates proportionate with actual operation and maintenance costs. The proposed assessment rates for 1987 will amount to an increase ranging from 3.3 percent to 4.5 percent for the Michaud Unit due to 53.3% increase in power rates. The public is welcome to participate in the rule-making process of the Department of the Interior. Accordingly, interested persons may submit written comments, views and arguments with respect to the proposed rates and related regulations to the Area Director, Portland Area Office, Bureau of Indian Affairs, Post Office Box 3785, Portland, Oregon 97208, no later than 30 days after publication of this notice in the **Federal Register**.

Fort Hall Irrigation Project—Regulations and Charges

Administration

The Fort Hall Irrigation Project, which consists of the Fort Hall Unit including ceded area south of the Fort Hall Indian Reservation, the Michaud Unit and the Minor Units on the Fort Hall Indian Reservation, Idaho, is administered by the Bureau of Indian Affairs. The Superintendent of the Fort Hall Agency is the Officer-in-Charge and is fully authorized to carry out and enforce the regulations, either directly or through employee designated by him. The general regulations are contained in Part 171, Operation and Maintenance, Title 25—Indians, Code of Federal Regulations.

Irrigation Season

Water will be available for irrigation purposes from April 15 to September 30 of each year. These dates may be varied by 15 days depending on weather conditions and the necessity for doing maintenance work.

Methods of Irrigation

Where soil, topography, and other physical conditions are unfavorable for surface irrigation, and the project facilities are designed to deliver water to farm units for sprinkler irrigation, the Officer-In-Charge may limit deliveries to this type of irrigation.

Distribution and Apportionment of Water

(a) *Delivery:* Water for irrigation purposes will be delivered throughout the irrigation season by either the continuous flow or rotation method at the discretion of the Officer-in-Charge. If during a time when delivery is by the rotation method, a water user desires to loan his turn to another eligible water user, he shall notify either the watermaster or the ditch rider who may permit such exchange, if feasible.

(b) *Preparation and Submission of Water Schedule:* If the decision of the Officer-in-Charge is to deliver water by the rotation method, the watermaster will assist the water users on each lateral in preparing a rotation schedule should they choose to get together and prepare the schedule. In cases where the water users fail to exercise this right before March 1, the watermaster will prepare the schedule which shall be final for the seasons. Owners of 120 acres or more in one farm unit may elect between the continuous flow and rotation method of delivery, provided such choice does not interfere with delivery to other lands served by the lateral.

(c) *Application for Deliveries of Irrigation Water:* Requests for water changes will be made at least 24 hours in advance. Not more than one change will be made per day. Changes will be made only during the ditch rider's regular tour. Pump shut-down, regardless of duration, without the required notice will result in the delivery being closed and locked. Repeated violations of this rule will result in strict enforcement of rotation schedules. Water users will change their sprinkler lines without shutting off more than one-half of their lines at one time. Sudden and unexpected changes in ditch flow

results in operating difficulties and waste of water.

Duty of Water

Dependent upon available supplies of water for each unit of the Project, the duty of water is based on the delivery to the farm unit of 3.5 acre-feet of water per acre per irrigation season. This duty of water may be varied at the discretion of the Officer-in-Charge depending on supplies available, but each irrigable acre shall be entitled to its pro-rate share of the total water supply.

Charges

Bills covering irrigation charges will be issued to the owner of record taken from the Bannock, Bingham or Power County records as of December 31, preceding the due date. In the case of Indian-owned land leased to a non-Indian, when an approved lease contract is on file with the superintendent of the Fort Hall Agency, operation and maintenance charges will be billed to the lessee of record.

Basic and Other Water Charges

(a) The annual basic water charges for the operation and maintenance of the Fort Hall Irrigation Project lands in non-Indian ownership, and assessable Indian-owned lands leased to a non-Indian or a non-member of the Shoshone-Bannock Tribes of the Fort Hall Indian Reservation, Idaho, are fixed for the Calendar Year 1983 and subsequent years until further notice as follows:

(1) For Hall Unit basic rate..... $17.00 per acre.
(2) Michaud Unit basic rate.....$22.00 per acre.
Additional rate for sprinkler...$8.50 per acre.
(3) Minor Units basic rate.....$14.00 per acre.

(b) In addition to the foregoing charges there shall be collected a minimum charge of $5 for the first acre, or fraction thereof, on each tract of land for which operation and maintenance bills are prepared. The minimum bill issued for any Area will, therefore, be the basic rate per acre plus $5.

Payments

The water charges become due on April 1 of each year and are payable on or before that date. To all assessments on lands in non-Indian ownership, and lands in Indian ownership which do not qualify for free water, remaining unpaid on or after July 1 following the due date, there shall be added a penalty of one and one-half percent per month, or fraction thereof, from the due date until paid. No water shall be delivered to any farm unit until all irrigation charges have been paid.

Assessments on Indian Owned Land

When land owned by members of the Shoshone-Bannock Tribes of the Fort Hall Indian Reservation is first leased to non-Indians or non-members of the tribe, and an approved lease is on file at the Fort Hall Agency, the leased land is not subject to operation and maintenance assessments for three years. The three years the land is not subject to assessment need not run consecutively. When land has been leased for a total of three years, the land, when under lease to non-Indians or non-members of the tribe, is subject to operation and maintenance assessments the same as lands on non-Indian ownership and lands owned by non-members of the tribe within the project. (See Solicitor's Opinion M 28701, approved September 24, 1936, and the instructions of September 19, 1938, approved September 24, 1938, and instructions of December 1, 1938, approved December 17, 1938).

Stanley Speaks,
Area Director.

[FR Doc. 87-195 Filed 1-6-87; 8:45 am]
BILLING CODE 4310-02-M

Bureau of Land Management

[ID-943-07-4220-11; I-016758, I-2013]

Idaho; Proposed Continuation of Withdrawals

AGENCY: Bureau of Land Management, Interior.

ACTION: Notice.

SUMMARY: The Bureau of Reclamation proposes that two withdrawals be continued for an additional 100 years, which is the estimated remaining life of the improvements and the wildlife enhancement projects with which they are associated. Under the proposal, the 1,149.11 acres involved would remain closed to surface entry and the mining laws, but the entire acreage has been and would remain open to the mineral leasing laws.

DATE: Comments should be received April 7, 1987.

ADDRESS: Comments should be sent to: Idaho State Director, Bureau of Land Management, 3380 Americana Terrace, Boise, ID 83707.

FOR FURTHER INFORMATION CONTACT: William E. Ireland, Idaho State Office, 208-334-1597.

The Bureau of Reclamation proposes that two land withdrawals made by Public Land Order Nos. 4836 and 5221, be continued for a period of 100 years pursuant to section 204 of the Federal Land Policy and Management Act of 1976, 90 Stat. 2751; 43 U.S.C. 1714. The lands are described as follows:

Boise Meridian, Idaho

T. 1 N., R. 40 E.,
Sec. 2, lot 4, N½SW¼NW¼;
Sec. 3, lot 1, N½SE¼NE¼.
T. 2 N., R. 40 E.,
Sec. 2, lot 4;
Sec. 3, lots 1, 2 and 3;
Sec. 27, E½E½, SW¼SE¼;
Sec. 34, N½NE¼, SE¼SE¼,
Sec. 35, W½SW¼SW¼.
T. 3 N., R. 40 E.,
Sec. 27, W½E½;
Sec. 34, E½W½, NW¼NE¼, W½SE¼, SE¼SE¼.
T. 6 N., R. 39 E.,
Sec. 30, lots 15, 17, 18 and 19.

The total area described contains 1,149.11 acres more or less in Bonneville and Madison Counties. One land parcel, containing 43.93 acres, is located 5 miles west of Rexburg, adjacent to and west of Henrys Fork of the Snake River. It has been withdrawn as Wildlife Mitigation for the Ririe Dam Project and is being managed under cooperative agreement through the Corps of Engineers, the Idaho Department of Fish and Game and the Bureau of Reclamation for fish and wildlife conservation. The remaining lands, consisting of 1,105.18 acres, are located south of Ririe, adjacent to and under the Ririe Reservoir and along the Willow Creek Drainage. They were withdrawn for construction of the reservoir and as mitigation land for deer and elk habitat. No change is proposed in the purpose or segregative effect of the withdrawals.

For a period of 90 days from the date of publication of this notice, all persons who wish to submit comments in connection with the proposed withdrawal continuations may present their views in writing to the Idaho State Director at the address indicated above.

The authorized officer of the Bureau of Land Management will undertake such investigations as are necessary to determine the existing and potential demand for the land and its resources. A report will also be prepared for consideration by the Secretary of the Interior, the President and Congress, who will determine whether or not the withdrawals will be continued, and if so, for how long. The final determination of the withdrawals will be published in the **Federal Register**. The existing

withdrawals will continue until such final determination is made.

Dated: December 24, 1986.

William E. Ireland,

Chief, Realty Operations Section.

[FR Doc. 87-212 Filed 1-6-87; 8:45 am]

BILLING CODE 4310-GG-M

[NM-040-07-4212-24-ZGKD; OK NM-63435]

Issuance of Disclaimer of Interest to Lands in Oklahoma

AGENCY: Bureau of Land Management, Interior.

ACTION: Notice of intent to issue disclaimer of interest.

SUMMARY: Notice is hereby given that the United States of America, pursuant to the provisions of the Federal Land Policy and Management Act (FLPMA) of 1976, section 315, 43 U.S.C. 1745 (1976), does hereby disclaim and release to the Commissioners of the Land Office of the State of Oklahoma, and to Northern Michigan Exploration Company, all interests in both the surface and mineral estate for the following described property:

Indian Meridian, Oklahoma, Ellis County

T. 28 N., R. 25 W.,
Sec. 28, Lot 1.
Containing 29.15 acres plus accretions.

After review of the official records, it has been determined by the Bureau of Land Management that all of the described land was erroneously conveyed to Emeline Carper on January 30, 1980. The land should have been clearlisted to the State of Oklahoma. The issuance of a disclaimer to the respective parties will help to resolve the title conflict.

Any person wishing to submit a protest, claim, or comments on the above disclaimer, should do so in writing before the expiration of 90 days from the date of publication of this notice. If no protest is received, the disclaimer will become effective on or about February 28, 1987. Information concerning this land and the proposed disclaimer may be obtained from the Bureau of Land Management, 9522H East 47th Place, Tulsa, OK 74145.

Jim Sims,

District Manager.

Dated: December 17, 1986.

[FR Doc. 87-215 Filed 1-16-87; 8:45 am]

BILLING CODE 4310-FB-M

[ES-970-07-4121-14-2410]

Southern Appalachian Federal Coal Production Region—Alabama Subregion

AGENCY: Bureau of Land Management, Interior.

ACTION: Notice cancelling the Alabama Subregion of the Southern Appalachian Federal Coal Production Region and opening the three-county area to lease-by-application.

SUMMARY: On November 9, 1979, the Bureau of Land Management (BLM) established the Alabama Subregion of the Southern Appalachian Federal Coal Production Region for the management of federally owned coal (44 FR 65196-65197). Subsequent assessments indicate that industry interest, based on coal market conditions, do not justify the continued use of federally initiated regional coal activity planning lease sale procedures outlined in 43 CFR Part 3420. In accordance with 43 CFR 3400.5, this notice cancels the Alabama Subregion of the Southern Appalachian Federal Coal Production Region. Further, this notice designates Federal coal reserves in the three-county area of Alabama as open to lease by application in accordance with 43 CFR Part 3425.

EFFECTIVE DATE: February 6, 1987.

FOR FURTHER INFORMATION CONTACT: Dave Traudt, Eastern States Office, (703) 274-0142; or Ed Rodgers, Jackson District Office, (601) 965-4405.

SUPPLEMENTARY INFORMATION: On November 9, 1979, the BLM established the Alabama Subregion of the Southern Appalachian Federal Coal Production Region for the management of Federal coal (44 FR 65196-65197). The subregion originally included Fayette, Tuscaloosa, and Walker Counties and the western portion of Jefferson County. On March 10, 1982, the BLM announced the deletion of Jefferson County from the subregion and opened the county to leasing by application (47 FR 10295-10296).

The leasing of Federal coal resources in the Alabama Subregion has been the subject of two regional Environmental Impact Statements (EIS's). The first was finalized in January 1981 and resulted in a first round leasing effort. In that effort, three separate coal sales were held over a 15-month period which resulted in the leasing of 13 separate tracts and about 39 million tons of recoverable Federal coal. (The sales were held in June 1981, December 1981, and September 1982.)

The second round effort was commenced following the last first round sale in September 1982. The Southern Appalachian Coal Regional Final Environnmental Impact Statement—II was filed with the Environmental Protection Agency in December 1983. A decision on a second round lease sale was suspended by then Secretary Clark in early 1984. Former Secretary Clark suspended Federal coal leasing (except for emergency leasing and the processing of Preference Right Lease Applications) pending a review of the Federal coal leasing program and the development of an EIS supplement for the program. In October 1985, the Federal Coal Management Program Final EIS Supplement was completed, and on February 21, 1986, Secretary Hodel decided to resume the Federal coal leasing program as modified by several program changes adopted as a result of the coal program review.

During 1982, the Alabama coal industry was rapidly expanding to meet the anticipated demands for coal. Total production in the State peaked at 27.5 million tons. Industry interest in the Federal coal leasing program was strong. The next year (1983) saw a worldwide depressed coal market. Alabama coal production dropped to 22.7 million tons. The interst is acquiring additional reserves began to wane. During 1984 and 1985, the coal market began recovering, but production was still far below the earlier projections. In 1986, with the price of oil dropping to a 10-to-12 year low, the market for coal had not improved. At this time, only one company has shown interest in leasing Federal coal in the Alabama Subregion.

In light of the soft market conditions described above, the Governor of Alabama proposed that the Eastern States Director convert the region to lease by application procedures as soon as possible. Governor Wallace also requested that public input be considered prior to making the recommendation to the Director of the BLM. Finally, the Governor requested that the State of Alabama be retained as a member of the Federal-State Coal Advisory Board.

On September 4, 1986, the BLM announced a 30-day comment period on the proposal to decertify the subregion (51 FR 31752). No comments were received during that period.

In accordance with 43 CFR 3400.5, this notice is to advise the public that the Alabama Subregion, Southern Appalachian Federal Coal Production Region is decertified, and that the Federal coal reserves of the three-county area of Alabama will be leased under 43 CFR Part 3425 (lease by application) rather than under 43 CFR Part 3420. The expected benefits are a substantial savings in administrative

costs to both the Federal Government and the State of Alabama, while retaining a responsible leasing process for the coal industry. No additional social, economic, or environmental impacts are anticipated as a result of this change in the method of leasing.

Any applications for Federal coal leasing being processed prior to this notice shall continue to be processed according to the procedures in effect at the time of application.

Applications under 43 CFR 3425.1 shall be accepted by the BLM to lease Federal coal in the three counties named above. Three copies of the application shall be filed in the Eastern State Office of the BLM, 350 South Pickett Street, Alexandria, Virginia 22304.

Supportive information on Federal coal reserve areas is available for public inspection at the Jackson District Office, BLM, Jackson Mall Office Ceter, Suite 326, 300 Woodrow Wilson, Jackson, Mississippi 39213.

Dave O'Neal,

Acting Director, Bureau of Land Management.

December 31, 1986.

[FR Doc. 87-141 Filed 1-6-87; 8:45 am]

BILLING CODE 4310-GJ-M

Geological Survey

Information Collection Submitted to the Office of Management and Budget for Review Under the Paperwork Reduction Act

The proposal for the collection of information listed below has been submitted to the Office of Management and Budget for approval under the provisions of the Paperwork Reduction Act (44 U.S.C. Chapter 35). Copies of the proposed information collection requirement and related forms and explanatory material may be obtained by contacting the Bureau's Clearance Officer at the phone number listed below. Comments and suggestions on the requirement should be made directly to the Bureau Clearance Officer and the Office of Management and Budget, Office of Information and Regulatory Affairs, Washington, DC 20503, Attention: Desk Officer for Interior, Telephone: 202-395-7340.

Title: Inventory of Hydrologic Data Acquisition

Abstract: The information is needed by Federal, State, and local water scientists and water managers to locate water data collected as part of areal investigations. The information is used to characterize the chemical and biological quality of water and to describe water availability.

Bureau Form Number: 9-2081, A-1

Frequency: Annual

Description of Respondents: State, and local agencies and an occasional contractor

Annual Responses: 113 entities—678 new forms and updates.

Annual Burden Hours: 170

Bureau Clearance Officer: Geraldine A. Wilson; 703-648-7309.

Dated: December 1, 1986.

Philip Cohen,

Chief Hydrologist.

[FR Doc. 87-194 Filed 1-6-87; 8:45 am]

BILLING CODE 4310-31-M

Bureau of Mines

Information Collection Submitted to the Office of Management and Budget for Review Under the Paperwork Reduction Act

The proposal for the collection of information listed below has been submitted to the Office of Management and Budget for approval under the provisions of the Paperwork Reduction Act (44 U.S.C. Chapter 35). Copies of the proposed collection of information and related forms and explanatory material may be obtained by contacting the Bureau's clearance officer at the phone number listed below. Comments and suggestions on the requirement should be made within 30 days directly to the Bureau's clearance officer and to the Office of Management and Budget Interior Department Desk Officer, Washington, DC 20503, telephone 202-395-7313.

Title: Human Factors Laboratory Subject Testing

Abstract: The data collection is needed to provide necessary information regarding the physical stresses associated with working in underground mines. Data will be used to establish recommended work practices for the underground mining industry. Respondents will be miners or volunteers from the Bureau of Mines.

Bureau Form Number: 6-1628-A

Frequency: Annually

Description of Respondents: Individuals employed as miners who typically perform physical work in the mining environment, or employees of the Bureau of Mines who volunteer to act as subjects in pilot studies.

Annual Responses: 50

Annual Burden Hours: 25

Bureau clearance officer: James T. Hereford, 202-634-1125.

Robert C. Horton,

Director, Bureau of Mines.

December 24, 1986.

[FR Doc. 87-190 Filed 1-6-87; 8:45 am]

BILLING CODE 4310-53-M

Office of Surface Mining Reclamation and Enforcement

Information Collection Submitted to the Office of Management and Budget for Review Under the Paperwork Reduction Act

The proposal for the collection of information listed below has been submitted to the Office of Management and Budget for approval under the provisions of the Paperwork Reduction Act (44 U.S.C. Chapter 35). Copies of the proposed collection of information and related forms and explanatory material may be obtained by contacting the Bureau's clearance officer at the phone number listed below. Comments and suggestions on the requirement should be made within 30 days directly to the Bureau clearance officer and to the Office of Management and Budget Interior Department Desk Officer, Washington, DC 20503, telephone 395-7313.

Title: Requirements for Permits for Special Categories of Mining Part—785

Abstract: Section 515 and 711 of Pub. L. 95-85 requires applicants for special types of mining activities to provide the regulatory authority with specific information of plans for the activity. This information will be used by the regulatory authority to determine if the proposed mining and reclamation plan comply with the standards of the regulatory program and the Act.

Bureau Form Number: None

Frequency: Every 5 years

Description of Respondents: State Regulatory Authorities; Coal Mine Operators

Annual Responses: 6160

Annual Burden Hours 130,744

Bureau Clearance Officer: Darlene Grose Boyd 343-5447

Dated: December 17, 1986.

Donald L. Hinderliter,

Acting, Assistant Director for Budget and Administration.

[FR Doc. 87-193 Filed 1-6-87; 8:45 am]

BILLING CODE 4310-05-M

INTERNATIONAL TRADE COMMISSION

[Investigation No. 337-TA-242]

Certain Dynamic Random Access Memories, Components Thereof, and Products Containing Same; Initial Determination Terminating Respondents on the Basis of Settlement Agreement

AGENCY: International Trade Commission.

ACTION: Notice is hereby given that the commission has received an initial determination from the presiding officer in the above-captioned investigation terminating the following respondents on the basis of a settlement agreement: Sharp Corporation and Sharp Electronics Corporation, (collectively "Sharp").

SUPPLEMENTARY INFORMATION: This investigation is being conducted pursuant to section 337 of the Tariff Act of 1930 (19 U.S.C. 1337). Under the Commission's rules, the presiding officer's initial determination will become the determination of the Commission thirty (30) days after the date of its service upon the parties, unless the Commission orders review of the initial determination. The initial determination in this matter was served upon the parties on December 29, 1986.

Copies of the initial determination, the settlement agreement, and all other nonconfidential documents filed in connection with this investigation are available for inspection during official business hours (8:45 a.m. to 5:15 p.m.) in the Office of the Secretary, U.S. International Trade Commission, 701 E Street NW., Washington, DC 20436, telephone 202-523-0161. Hearing impaired individuals are advised that information on this matter can be obtained by contacting the Commission's TDD terminal on 202-724-0002.

WRITTEN COMMENTS: Interested persons may file written comments with the Commission concerning termination of the aforementioned respondents. The original and 14 copies of all such comments must be filed with the Secretary of the Commission, 701 E Street, NW., Washington, DC 20436, no later than 10 days after publication of this notice in the **Federal Register**. Any person desiring to submit a document (or portion thereof) to the Commission in confidence must request confidential treatment. Such requests should be directed to the Secretary to the Commission and must include a full statement of the reasons why confidential treatment should be granted. The Commission will either accept the submission in confidence or return it.

FOR FURTHER INFORMATION CONTACT: Ruby J. Dionne, Office of the Secretary, U.S. International Trade Commission, Telephone 202-523-0176.

Issued: December 29, 1986.
By order of the Commission.

Kenneth R. Mason,
Secretary.

[FR Doc. 87-261 Filed 1-6-87; 8:45 am]

BILLING CODE 7020-02-M

[Investigations Nos. 303-TA-18, 701-TA-275, 277, and 278, and 731-TA-327 through 334 (Final)]

Certain Fresh Cut Flowers From Canada, Chile, Colombia, Costa Rica, Ecuador, Israel, Kenya, Mexico, the Netherlands, and Peru

AGENCY: International Trade Commission.

ACTION: Revised schedule for the subject investigations.

EFFECTIVE DATE: December 19, 1986.

FOR FURTHER INFORMATION CONTACT: Dan Dwyer (202-523-4618), Office of Investigations, U.S. International Trade Commission, 701 E Street NW., Washington, DC 20436. Hearing-impaired individuals may obtain information on this matter by contacting the Commission's TDD terminal on 202-724-0002.

SUPPLEMENTARY INFORMATION: On October 27, 1986, the Commission instituted the subject investigations and established a schedule for their conduct (51 FR 41840, November 19, 1986). On December 18, 1986, the Commission received a request on behalf of 12 parties to postpone the hearing in the investigations from January 20, 1987 to February 2, 1987. The Commission granted this request, and is revising its schedule in the investigations.

The Commission's new schedule for the investigations is as follows: requests to appear at the hearing must be filed with the Secretary to the Commission not later than January 20, 1987; the prehearing conference will be held in room 117 of the U.S. International Trade Commission Building on January 26, 1987; the public version of the prehearing staff report will be placed on the public record on January 20, 1987; the deadline for filing prehearing briefs is January 28, 1987; [1] the hearing will be held in room 331 of the U.S. International Trade Commission Building on February 2, 1987; and the deadline for filing all other written submissions, including posthearing briefs, is February 6, 1987. In addition, a separate deadline will be established at the hearing for parties to comment in writing on the results of the final determination by the Commerce Department for any of the above investigations that are not the subject of such a final determination by the date of the Commission's hearing.

For further information concerning these investigations see the Commission's notice of investigation cited above and the Commission's Rules of Practice and Procedure, Part 207, Subparts A and C (19 CFR Part 207), and Part 201, Subparts A through E (19 CFR Part 201).

Authority: These investigations are being conducted under authority of the Tariff Act of 1930, title VII. This notice is published pursuant to § 207.20 of the Commission's rules (19 CFR 207.20).

Issued: December 29, 1986.

By order of the Commission.

Kenneth R. Mason,
Secretary.

[FR Doc. 87-255 Filed 1-6-87; 8:45 am]

BILLING CODE 7020-02-M

[Investigation No. 337-TA-183]

Certain Indomethacin; Determination of Violation of Section 337 and Issuance of General Exclusion Order and Cease and Desist Order

AGENCY: International Trade Commission.

ACTION: Determination of violation of section 337 of the Tariff Act of 1930 and issuance of a general exclusion order and a cease and desist order.

SUMMARY: The Commission has determined to reverse the initial determination (ID) of the presiding administrative law judge (ALJ) finding no violation of section 337 in the above-captioned investigation, and has determined that there is a violation of section 337 of the Tariff Act of 1930 (19 U.S.C. § 1337) and 19 U.S.C. 1337a in the unlawful importation into and sale in the United States of indomethacin manufactured outside of the United States by a process which, if practiced in the United States, would infringe claims 1, 2, 4, or 7 of U.S. Letters Patent

[1] Pursuant to the request by parties to postpone the hearing, the period between the placing of the prehearing staff report on the record and the deadline for filing prehearing briefs is 8 days. The Commission hereby waives § 207.22 of the Commission's Rules (19 CFR 207.22), which requires such a period to be 10 days.

3,619,284, the effect or tendency of which is to destroy or substantially injure an industry, efficiently and economically operated, in the United States. The Commission has also determined that a general exclusion order and a cease and desist order directed to respondent GYMA Laboratories of America, Inc., pursuant to sections 337(d) and (f) are the appropriate remedies for violations of sections 337 and 19 U.S.C. 1337a found to exist; that the public interest considerations enumerated in sections found to exist; that the public interest considerations enumerated in sections 337(d) and (f) do not preclude relief; and that the amount of bond during the Presidential review period under section 337(g) shall be 91 percent of the entered value of the subject articles.

FOR FURTHER INFORMATION CONTACT: Wayne Herrington, Esq., Office of the General Counsel, U.S. International Trade Commission, telephone 202-523-3395.

SUPPLEMENTARY INFORMATION: On August 13, 1986, the presiding ALJ issued an ID finding no violation of section 337 of the Tariff Act of 1930 (19 U.S.C. 1337). The ALJ's determination was based on a finding that the patent in controversy, U.S. Letters Patent 3,619,284 (the '284 patent), had expired under the terms of a terminal disclaimer filed with the U.S. Patent and Trademark Office. On September 29, 1986, the Commission determined to review the entire ID, except for that portion of the ID relating to the validity of the '284 patent. 51 FR 36072 (Oct. 8, 1986). The Commission requested briefs on two issues under review and on the issues of remedy, the public interest, and bonding. Submissions were received from complainant Merck & Co., Inc., the Commission investigative attorney, and respondents Fabbrica Italiana Sintetici S.p.A. and S.S.T. Corporation. No submissions from the public or government agencies were received.

This action is taken under the authority of section 337 of the Tariff Act of 1930 (19 U.S.C. 1337), 19 U.S.C. 1337a, and sections 210.54 through 210.58 of the Commission's Rules of Practice and Procedure (19 CFR 210.54 through 210.58).

Notice of this investigation was published in the **Federal Register** on February 23, 1984. 49 FR 6810-6811.

Copies of the Commission's action and order, the opinions issued in connection therewith, and all other nonconfidential documents filed in this investigation are available for inspection during official business hours (8:45 a.m. to 5:15 p.m.) in the Office of the Secretary, U.S. International Trade Commission, 701 E Street NW., Washington, DC 20436, telephone 202-523-0161. Hearing impaired individuals are advised that information on this matter can be obtained by contacting the Commission's TDD terminal on 202-724-0002.

Issued: December 24, 1986.

By order of the Commission.

Kenneth R. Mason,

Secretary.

[FR Doc. 87-258 Filed 1-6-87; 8:45 am]

BILLING CODE 7020-02-M

[Investigation No. 337-TA-183]

Certain Indomethacin; Commission Decision to Certify to the Administrative Law Judge Motions of Respondents Alleging Abuse of Commission Process by Complainant

AGENCY: International Trade Commission.

ACTION: Certification to the presiding administrative law judge (ALJ) of motions filed by respondents Lederle Laboratories, GYMA Laboratories of America, Industrie Chimiche Farmaceutiche Italiana S.p.A., ACIC Ltd., Ellis Pharmaceuticals, Inc., Henley & Co., B.T.B., Pharma Development Corp., Agvar Chemicals, and European Manufacturers Associates, and the response of the Commission investigative attorney (IA) requesting the assessment of fees and costs and other sanctions against complainant Merck & Co., Inc., for alleged abuse of Commission process.

SUMMARY: The Commission has certified to the ALJ the motions filed by the above-named respondents and the response of the IA alleging abuse of Commission process by complainant and requesting the imposition of costs and attorneys' fees, and other sanctions.

FOR FURTHER INFORMATION CONTACT: Wayne Herrington, Esq., Office of the General Counsel, U.S. International Trade Commission, tel. 202-523-3395.

SUPPLEMENTARY INFORMATION: This investigation was instituted on Feb. 14, 1984, based on a complaint filed by Merck & Co., Inc. (Merck) under section 337 of the Tariff Act of 1930 (19 U.S.C. 1337) alleging unfair acts in the importation and sale of indomethacin manufactured abroad by a process which, if practiced in the United States, would infringe claims of U.S. Letters Patent 3,629,284 with the effect or tendency to substantially injure an efficiently and economically operated domestic industry.

The presiding administrative law judge (ALJ) on Sept. 11, 1984, issued an initial determination (ID) (Order No. 41) granting respondent Mylan Pharmaceuticals Co.'s motion for summary determination and terminated the investigation based on a finding of no violation of section 337. The Commission determined not to review the ALJ's ID terminating the investigation. Merck appealed the Commission's decision to the U.S. Court of Appeals for the Federal Circuit (CAFC). The CAFC reversed the Commission's decision and remanded the investigation to the Commission.

On Oct. 3, 1984, respondent Lederle Laboratories (Lederle) filed a motion requesting a "*Prima Facie* Determination of Abuse of Commission Process by Merck and for Institution of Ancillary Proceedings for the Assessment of Lederle's Fees and Costs Against Merck." Fifteen of the twenty-three other respondents in the investigation filed motions joining Lederle's motion. The Commission investigative attorney filed a submission supporting, in part, Lederle's motion. Complainant Merck filed responses in opposition to the respondents' motions. Six of the sixteen moving respondents have withdrawn their motions.

Lederle and the other moving respondents allege that complainant Merck abused Commission process by filing a section 337 complaint containing misleading allegations and by prolonging the investigation through discovery abuse.

The authority for the Commission's disposition of this matter is contained in section 337 of the Tariff Act of 1930 (19 U.S.C. 1337) and in 19 U.S.C. 1337a.

Copies of the Commission's Action and Order and all other nonconfidential documents filed in connection with this investigation are available for inspection during official business hours (8:45 a.m. to 5:15 p.m.) in the Office of the Secretary, U.S. International Trade Commission, 701 E Street NW., Washington, DC 20436, telephone 202-523-0161.

Hearing-impaired individuals are advised that information on this matter can be obtained by contacting the Commission's TDD terminal on 202-724-0002.

By order of the Commission.

Issued: December 30, 1986.

Kenneth R. Mason,

Secretary.

[FR Doc. 87-260 Filed 1-6-87; 8:45 am]

BILLING CODE 7020-02-M

[Investigations Nos. 701-TA-285 and 286 (Preliminary) and 731-TA-365 and 366 (Preliminary)]

Industrial Phosphoric Acid From Belgium and Israel

Determinations

On the basis of the record[1] developed in the subject investigations, the Commission determines,[2] pursuant to section 703(a) of the Tariff act of 1930 (19 U.S.C. 167b(a)), that there is a reasonable indication that an industry in the United States is materially injured by reason of imports from Belgium[3] and Israel[4] of industrial phosphoric acid, provided for in item 416.30 of the Tariff Schedules of the United States, which are alleged to be subsidized by the Governments of Belgium and Israel. The Commission also determines,[5] pursuant to section 733(a) of the Tariff Act of 1930 (19 U.S.C. 1673b(a)), that there is a reasonable indication that an industry in the United States is materially injured by reason of imports from Belgium[6] and Israel[7] of industrial phosphoric acid, which are alleged to be sold in the United States at less than fair value (LTFV).

Background

On November 5, 1986, petitions were filed with the Commission and the Department of Commerce by counsel on behalf of FMC Corp., Chicago, IL, and Monsanto Co., St. Louis, MO alleging that an industry in the United States is materially injured or threatened with material injury by reason of subsidized and LTFV imports of industrial phosphoric acid from Belgium and Israel. Accordingly, effective November 5, 1986, the Commission instituted preliminary countervailing duty investigations Nos. 701-TA-285 and 286 (Preliminary) and preliminary antidumping investigations Nos. 731-TA-365 and 366 (Preliminary).

Notice of the institution of the Commission's investigations and of a public conference to be held in connection therewith was given by posting copies of the notice in the Office of the Secretary, U.S. International Trade Commission, Washington, DC, and by publishing the notice in the Federal Register of November 18, 1986 (51 FR 41674). The conference was held in Washington, DC, on November 26, 1986, and all persons who requested the opportunity were permitted to appear in person or by counsel.

The Commission transmitted its determinations in these investigations to the Secretary of Commerce on December 22, 1986. The views of the Commission are contained in USITC Publication 1931 (December 1986), entitled "Industrial Phosphoric Acid from Belgium and Israel: Determinations of the Commission in Investigations Nos. 701-TA-285 and 286 (Preliminary) Under the Tariff Act of 1930, Together With the Information Obtained in the Investigations and Determinations of the Commission in Investigations Nos. 731-TA-365 and 366 (Preliminary) Under the Tariff Act of 1930, Together With the Information Obtained in the Investigations."

Issued: December 22, 1986.

By order of the Commission.

Kenneth R. Mason,

Secretary.

[FR Doc. 87-256 Filed 1-6-87; 8:45 am]

BILLING CODE 7020-02-M

[Investigation No. 332-243]

Origin Rule for Proposed U.S.-Canada Free Trade Area

AGENCY: International Trade Commission.

ACTION: Institution of an investigation and scheduling of public hearing.

EFFECTIVE DATE: January 2, 1987.

FOR FURTHER INFORMATION CONTACT: Janis L. Summers, Esq., Office of Tariff Affairs and Trade Agreements, U.S. International Trade Commission, Washington, DC 20436 (202) 523-0326.

Background and Scope of Investigation

The Commission instituted the investigation, No. 332-243, under section 332(g) of the Tariff Act of 930 (19 U.S.C. 1332(g)), following the receipt of a request therefor from the United States Trade Representative (USTR), at the direction of the President.

In his letter requesting the investigation, Ambassador Clayton Yeutter noted the need for a detailed examination of particular country of origin rules which might be employed under a U.S.-Canada free trade area. He stated that the common rule of origin for the free trade area should confine its benefits to the intended products which contain sufficient U.S. and Canadian content to merit preferential tariff treatment, should be easily administered, and should produce consistent results. The two rules which he requested be the focus of the Commission's study are substantial transformation, which is used by the U.S. Customs Service, and change of tariff classification, which has been suggested as an origin criterion to be used in conjunction with the Harmonized System tariff nomenclature.

As requested by Ambassador Yeutter, this study will address the issues of (1) the suitability of either of the above two rules for use in the free trade area, (2) any administrative or other problems which would be associated with the above two rules, (3) how a shift to a change of classification rule of origin under the Harmonized System would affect U.S. industries and importers, (4) what percentage figure might be appropriate for a cost of national material/direct cost of processing element for the rule, and (5) the degree to which the two rules would achieve the goal of confining the free trade area benefits to actual products of the two countries while promoting transparency, ease of administration, and predictability of results.

A copy of the request letter received from Ambassador Yeutter is available for public inspection in the Office of the Secretary. As requested by the Ambassador, the Commission will transmit its completed report to the USTR not later than March 1, 1987.

Public Hearing and Written Submissions

In view of the Commission's previously instituted investigation No. 332-239, Standardization of Rules of Origin, the public hearing in that study will also cover any matters relating to the question of an apporpriate rule of origin for a U.S.-Canada free trade area. The public hearing is scheduled to be held in room 331 of the U.S. International Trade Commission Building at 9:30 a.m. on January 23, 1987. The deadline for filing pre-hearing briefs and requests to testify is January 13, 1987. Interested persons not wishing to testify in regard to the rule of origin for the free trade area are invited to submit written statements concerning the investigation, to be received by the close of business on February 2, 1987. Commercial or financial information which a submitter desires the Commission to treat as confidential must be submitted on separate sheets of paper, each clearly marked "Confidential Business Information" at the top. All submissions requesting confidential treatment must conform

---

[1] The record is defined in 207.2(i) of the Commission's Rules of Practice and Procedure (19 CFR 207.2(i)).

[2] Chairman Liebeler and Vice Chairman Burnsdale dissenting. Commissioner Stern did not participate in these investigations.

[3] Investigation No. 701-TA-285 (Preliminary).

[4] Investigation No. 701-TA-286 (Preliminary).

[5] Chairman Liebeler and Vice Chairman Burnsdale dissenting. Commissioner Stern did not participate in these investigations.

[6] Investigation No. 731-TA-365 (Preliminary).

[7] Investigation No. 731-TA-366 (Preliminary).

with the requirements of § 201.6 of the Commission's *Rules of Practice and Procedure* (19 CFR 201.6). All written submissions will be made available to the USTR upon his request; all written submissions, except for confidential business information, will be made available for inspection by interested persons. All submissions should be addressed to the Secretary at the Commission's office in Washington, DC.

Issued: January 2, 1987.

By order of the Commission.

Kenneth R. Mason,

Secretary.

[FR Doc. 87-257 Filed 1-6-87; 8:45 am]

BILLING CODE 7020-02-M

[Investigation No. 731-TA-336 (Final)]

Porcelain-on-Steel Cooking Ware From Spain

AGENCY: International Trade Commission.

ACTION: Institution of a final antidumping investigation.

SUMMARY: The Commission hereby gives notice of the institution of final antidumping investigation No. 731-TA-336 (Final) under section 735(b) of the Tariff Act of 1930 (19 U.S.C. 1673d(b)) to determine whether an industry in the United States is materially injured, or is threatened with material injury, or the establishment of an industry in the United States is materially retarded, by reason of imports from Spain of procelain-on-steel cooking ware,[1] provided for in item 654.08 of the Tariff Schedules of the United States, which have been found by the Department of Commerce, in a preliminary determination, to be sold in the United States at less than fair value (LTFV). The Commission will make its final injury determination within forty-five days after notification of Commerce's final determination (see sections 735(a) and 735(b) of the Act (19 U.S.C. 1673d(a) and 1673d(b))).

For further information concerning the conduct of this investigation, hearing procedures, and rules of general application, consult the Commission's Rules of Practice and Procedure, Part 207, Subparts A and C (19 CFR Part 207), and Part 201, Subparts A through E (19 CFR Part 201).

EFFECTIVE DATE: December 12, 1986.

[1] Cooking ware, including teakettles, not having self-contained electric heating elements, all the foregoing of steel and enameled or glazed with vitreous glasses, but not including kitchen ware (currently reported under item 654.0828 of the Tariff Schedules of the United States Annotated).

FOR FURTHER INFORMATION CONTACT: Martha Mitchell (202-523-6620), Office of Investigations, U.S. International Trade Commission, 701 E Street NW., Washington, DC 20436. Hearing-impaired individuals are advised that information on this matter can be obtained by contacting the Commission's TDD terminal on 202-724-0002.

SUPPLEMENTARY INFORMATION:

Background

This investigation is being instituted as a result of an affirmative preliminary determination by the Department of Commerce (51 FR 44825, December 12, 1986) that imports of procelain-on-steel cooking ware from Spain are being sold in the United States at less than fair value within the meaning of section 731 of the act (19 U.S.C. 1673). The investigation was requested in a petition filed on June 30, 1986, on behalf of General Houseware Corp., Terre Haute, IN. In response to that petition the Commission conducted a preliminary antidumping investigation and, on the basis of information developed during the course of that investigation, determined that there was a reasonable indication that an industry in the United States was materially injured by reason of imports of the subject merchandise (51 FR 29710, August 20, 1986).

Participation in the Investigation

Persons wishing to participate in this investigation as parties must file an entry of appearance with the Secretary of the Commission, as provided in § 201.11 of the Commission's rules (19 CFR 201.11), not later than twenty-one (21) days after the publication of this notice in the **Federal Register**. Any entry of appearance filed after this date will be referred to the Chairman, who will determine whether to accept the late entry for good cause shown by the person desiring to file the entry.

Service List

Pursuant to § 201.11(d) of the Commission's rules (19 CFR 201.11(d)), the Secretary will prepare a service list containing the names and addresses of all persons, or their representatives, who are parties to this investigation upon the expiration of the period for filing entries of appearance. In accordance with §§ 201.16(c) and 207.3 of the rules (19 CFR 201.16(c) and 207.3), each document filed by a party to the investigation must be served on all other parties to the investigation (as identified by the service list), and a certificate of service must accompany the document. The Secretary will not accept a document for filing without a certificate of service.

Hearing, staff report, and Written Submissions

The Commission will hold a hearing in connection with this investigation at the U.S. International Trade Commission Building, 701 E Street NW., Washington, DC; the time and date of the hearing will be announced at a later date. A public version of the prehearing staff report in this investigation will be placed in the public record prior to the hearing, pursuant to § 207.21 of the Commission's rules (19 CFR 207.21). The dates for filing prehearing and posthearing briefs and the date for filing other written submissions will also be announced at a later date.

Authority

This investigation is being conducted under authority of the Tariff Act of 1930, title VII. This notice is published pursuant to § 207.20 of the Commission's rules (19 CFR 207.20).

Issued: December 29, 1986.

By order of the Commission.

Kenneth R. Mason,

Secretary.

[FR Doc. 87-259 1-6-87; 8:45 am]

BILLING CODE 7020-02-M

INTERSTATE COMMERCE COMMISSION

[Finance Docket No. 30962]

Chicago and North Western Transportation Co.; Trackage Rights Exemption Granted by Des Moines Union Railroad Co.

Des Moines Union Railroad Company has agreed to grant overhead and limited local trackage rights to Chicago and North Western Transportation Company over 2.84 miles of its trackage in Des Moines, Iowa approximately between East 16th Street and the West 2000 block. The trackage rights will be effective on December 26, 1986.

This notice is filed under 49 CFR 1180.2(d)(7). Petitions to revoke the exemption under 49 U.S.C. 10505(d) may be filed at any time. The filing of a petition to revoke will not stay the transaction.

As a condition to use of this exemption, any employee affected by the trackage rights will be protected pursuant to *Norfolk and Western Ry. Co.—Trackage Rights—BN*, 354 I.C.C. 605 (1978), as modified in *Mendocino Coast Ry., Inc.—Lease and Operate*, 360 I.C.C. 653 (1980).

Dated: December 30, 1986.

By the Commission.

Noreta R. McGee,

Secretary.

[FR Doc. 87-347 Filed 1-6-87; 8:45 am]

BILLING CODE 7035-01-M

[Finance Docket No. 30237]

Maryland Midland Railway, Inc.; Exemption

AGENCY: Interstate Commerce Commission.

ACTION: Notice of exemption.

SUMMARY: The Commission exempts from the requirements of prior approval of (1) 49 U.S.C. 11343, the acquisition and operation by Maryland Midland Railway, Inc., of approximately 37.1 miles of track between Highfield and Westminster, MD, in Carroll, Frederick, and Washington Counties, MD and Franklin County, PA, subject to labor protection, and (2) 49 U.S.C. 11301, for the issuance of securities in an amount not to exceed $1,332,500 consisting of a note, and common and preferred shares of stock.

DATE: These exemptions are effective February 5, 1987.

ADDRESSES: Send pleadings referring to Finance Docket No. 30237 to:

(1) Office of the Secretary, Case Control Branch, Interstate Commerce Commission, Washington, DC 20423 and

(2) Petitioners' representatives: Henry E. Seaton, Suite 525 McLachlen Bank Bldg., 11th & G Sts., NW., Washington, DC 20423

FOR FURTHER INFORMATION CONTACT: Joseph H. Dettmar, (202) 275-7693.

SUPPLEMENTARY INFORMATION: This modifies a Notice of Exemption previously published at 48 FR 42877-42878 on September 20, 1983. Additional information is contained in the Commission's decision. To purchase a copy of the full decision, write to T.S. InfoSystems Inc., Interstate Commerce Commission Building, Room 2227, Washington, DC 20423, or call toll free (800) 424-5403, or 289-4357 (DC Metropolitan area).

Decided: December 18, 1986.

By the Commission, Chairman Gradison, Vice Chairman Simmons, Commissioners Sterrett, Andre, and Lamboley.

Noreta R. McGee,

Secretary.

[FR Doc. 87-248 Filed 1-6-87; 8:45 am]

BILLING CODE 7035-01-M

[Finance Docket No. 30945]

Walking Horse and Eastern Railroad Company, Inc.; Notice of Exemption Filed To Lease and Operate a Railroad Line From Illinois Central Gulf Railroad Company, Inc.

Walking Horse and Eastern Railroad Company, Inc. (WH&E) has filed a revised notice of exemption under 49 CFR 1180.2(d) [1] to lease and operate a railroad line owned by the Illinois Central Gulf Railroad Company (ICG). The line extends between Nashville and Ashland City, TN, and includes the North Nashville lead track between 26th Avenue and 1st Avenue, in the City of Nashville, a distance of approximately 29 miles.

ICG obtained authority to abandon the line in Docket No. AB-2 (Sub-No. 29F), *Louisville and Nashville Railroad Company—Abandonment Between Brenton and Rose Hill, TN, et al.* (not printed), served October 21, 1981. However, continued operation of the line by the Nashville and Ashland City Railroad Company (NAC) also was authorized. *See* Finance Docket No. 29382, *Tenmet, Inc. and Nashville and Ashland City Railroad Company—Acquisition and Operation* (not printed), served October 21, 1981. Recently, NAC's discontinuance of service over the line, effective December 19, 1986, was exempted from the prior approval requirements of 49 U.S.C. 10903, *et seq.*, in Docket No. AB-276X, *Nashville and Ashland City Railroad Company and Tenmet, Inc.—Exemption—Discontinuance of Service in Davidson and Cheatham Counties, TN* (not printed), served November 19, 1986.

Due to the loss of insurance, NAC has been unable to operate over the line since November 20, 1986. ICG and WH&E have entered into an agreement permitting WH&E to lease and operate the line until December 31, 1986.[2]

WH&E presently operates approximately 7.76 miles of railroad between Shelbyville and Wartrace, TN, pursuant to a modified certificate of public convenience and necessity served May 6, 1985, in Finance Docket No. 30653. This line is about 55 miles northwest of ICG's Nashville to Ashland City line. WH&E states that the lease and operation of ICG's line is not part of a series of transactions designed to connect the two rail lines, or any other railroads in its corporate family.

The transaction between WH&E and ICG is exempt from 49 U.S.C. 11343. See 49 CFR 1180.1(d)(1) and (2). Any employees affected by the lease and operation will be protected by the conditions in *New York Dock Ry.—Control—Brooklyn Eastern Dist.*, 360 I.C.C. 60 (1979). This will satisfy the statutory requirements of 49 U.S.C. 10505(g)(2).

Petitions to revoke the exemption under 49 U.S.C. 10505(d) may be filed at any time. The filing of a petition to revoke will not automatically stay the transaction.

Dated: December 31, 1986.

By the Commission, Jane F. Mackall, Director, Office of Proceedings.

Noreta R. McGee,

Secretary.

[FR Doc. 87-348 Filed 1-6-87; 8:45 am]

BILLING CODE 7035-01-M

[1] WH&E's notice of exemption was filed originally on November 20, 1986, under 49 CFR 1150.31. The notice of exemption was revised on December 15, 1986.

[2] WH&E also indicates that it may operate over the line until it is purchased by the local railroad authority. This notice of exemption will also encompass that possible future operation, thereby obviating the need for filing a second notice of exemption covering that operation.

NATIONAL AERONAUTICS AND SPACE ADMINISTRATION

[Notice (87-2)]

Intent To Prepare a Supplemental Environmental Impact Statement (EIS); Galileo and Ulysses Missions

AGENCY: National Aeronautics and Space Administration.

ACTION: Notice of intent to prepare a supplemental environmental impact statement.

SUMMARY: On September 5, 1985, NASA published a "Notice of Availability of Draft Environmental Impact Statement" for the Galileo and Ulysses missions (50 FR 36168). The proposed action presented in the Draft EIS included a proposal to use the newly designed Shuttle/Centaur G-Prime configuration for launching both missions. On June 19, 1986, development of the Shuttle/Centaur G-Prime Upper Stage was terminated, thus necessitating the definition and proposal of new launch configurations for the Galileo and Ulysses missions and preparation of a Supplemental Draft EIS. The Supplemental Draft EIS will address the decisions necessary for preparing the Galileo and Ulysses spacecraft for launch. A separate EIS will be prepared prior to the decision to launch both spacecraft. The Department of Energy (DOE) will be requested to participate as a cooperating agency in the NASA National Environmental Policy Act (NEPA) process.

For the Galileo mission, NASA is proposing to modify the spacecraft for use with the Shuttle/Inertial Upper Stage (STS/IUS). For the Ulysses mission, a Shuttle/IUS with a Payload Assist Module (PAM-S) launch configuration is proposed.

Both missions will use radioisotope thermoelectric generators (RTGs) and radioisotope heater units (RHUs) to supply spacecraft power and thermal control, respectively. Solar arrays, fuel cells and batteries are not power source options for either spacecraft because of their inability to satisfy mission power requirements at long distances from the sun for extended periods of time.

The Supplemental Draft EIS will address the use of the Titan IV expendable launch vehicle (ELV) as an alternative launch vehicle for the two missions. Additionally, the Supplemental Draft EIS will address alternative configurations for the missions' RTGs inside the Shuttle.

There are no adverse environmental impacts associated with the Galileo and Ulysses missions during a normal launch. In the event of a launch accident, there are potential adverse environmental effects associated with the possible release of plutonium-238 from the RTGs. The potential effects which will be considered in preparing the Supplemental Draft EIS include risks of: air and water quality impacts; local land area contamination by plutonium-238; adverse health and safety impacts; the disturbance of biotic resources; the occurrence of adverse impacts in wetland areas or in areas containing historical sites; and socio-economic impacts.

Associated with the launch of either mission are a number of environmental effects from the launch systems. Those resulting from the launch and landing of the Space Shuttle are detailed in the EIS's for the Space Shuttle Program (1978) and for the NASA Kennedy Space Center (Revision 1979).

A Supplemental Draft EIS is expected to be released for review and comment in March 1987. Written comments or suggestions are solicited as part of the EIS scoping process.

DATE: Comments in response to this notice must be received in writing within 30 days of publication in the **Federal Register.**

ADDRESS: Dr. Burton I. Edelson, Associate Administrator for Space Science and Applications, Code E, National Aeronautics and Space Administration, Washington, DC 20546.

FOR FURTHER INFORMATION CONTACT: Dr. Geoffrey Briggs, Code EL, NASA HQS., Washington, DC 20546, (202) 453-1588.

June Gibbs Brown,

Associate Administrator for Management.

[FR Doc. 87-186 Filed 1-6-87; 8:45 am]

BILLING CODE 7510-01-M

[Notice (87-1)]

NASA Advisory Council, Aeronautics Advisory Committee (AAC); Meeting

AGENCY: National Aeronautics and Space Administration.

ACTION: Notice of meeting.

SUMMARY: In accordance with the Federal Advisory Committee Act, Pub. L. 92-463, as amended, the National Aeronautics and Space Administration announces a forthcoming meeting of the NASA Advisory Council, Aeronautics Advisory Committee, Ad Hoc Review Team on Rotorcraft Noise and Vibration Research.

DATE AND TIME: January 26, 1987, 9 a.m. to 5 p.m.; January 27, 1987, 8 a.m. to 5 p.m.

ADDRESS: Boeing Company Offices, Management Information Conference Room, 20th Floor, Rosslyn Center, 1700 N. Moore Street, Rosslyn, VA 22209.

FOR FURTHER INFORMATION CONTACT: Mr. John Burks, Code RJ, Office of Aeronautics and Space Technology, National Aeronautics and Space Administration, Washington, DC 20546, 202/453-2807.

SUPPLEMENTARY INFORMATION: The NAC Aeronautics Advisory Committee (AAC) was established to provide overall guidance and direction to the aeronautics research and technology activities in the Office of Aeronautics and Space Technology (OAST). Special ad hoc teams were formed to address specific topics. The ad hoc team on Rotorcraft Noise and Vibration Research, chaired by Mr. Al Schoen, is comprised of 7 members. The meeting will be open to the public up to the seating capacity of the room (approximately 30 persons including the team members and other participants).

Type of meeting: Open

Agenda

January 26, 1987

9 a.m.—Presentation of Industry Vibration Study Results and Analyses

1 p.m.—Ad Hoc Review Team Discussion of Proposed Vibration Recommendations

5 p.m.—Adjourn

January 27, 1987

8 a.m.—Industry Presentations on Current Noise Prediction/Reduction State of the Art

1 p.m.—NASA/Army Presentations on Current and Future Government Noise Program

5 p.m.—Adjourn

Richard Daniels,

Advisory Committee Management Officer, National Aeronautics and Space Administration.

[FR Doc. 87-457 Filed 1-6-87; 8:45 am]

BILLING CODE 7510-01-M

NUCLEAR REGULATORY COMMISSION

[Docket Nos. 50-237/249/254/265]

Commonwealth Edison Co.; Withdrawal of Application for Amendments to Facility Operating Licenses

The U.S. Nuclear Regulatory Commission (the Commission) has granted the request of Commonwealth Edison Company (the licensee) to withdraw its March 31, 1982 application for amendments to Facility Operating Licenses Nos. DPR-19, DPR-25, DPR-29 and DPR-30 issued to the licensee for operation of the Dresden Nuclear Power Station Unit Nos. 2 and 3 and Quad Cities Nuclear Power Station, Units 1 and 2, respectively. Notice of consideration of issuance of these amendments was published in the **Federal Register** on October 26, 1983 (48 FR 49578).

The request proposed changes to the metal surveillance capsule program and the Appendix G minimum temperature requirements. The amendments were: (1) To reflect the incorporation of a 16 Effective Full-Power Years sample into Technical Specification Table 4.6.2 for the four units and (2) to revise the expiration date of the Figure 3.6.1, Appendix G minimum temperature requirements. The licensee indicated that new revised heat up and cool down curves are being developed for each unit, and it will resubmit a new application.

By letter dated December 6, 1986, the licensee requested, pursuant to 10 CFR 2.107, permission to withdraw its March 31, 1982 application. The Commission has considered the licensee's request and has determined that permission to withdraw the March 31, 1982 application for amendments should be granted.

For further details with respect to this action, see (1) the application for amendments dated March 31, 1982, (2)

the licensee's request for withdrawal dated December 6, 1986, and (3) the Commission's letter dated December 24, 1986. All of the above documents are available for public inspection at the Commission's Public Document Room, 1717 H Street NW., Washington, DC, at the Morris Public Library, 604 Liberty Street, Morris, Illinois 60450, and at the Moline Public Library, 507—17th Street, Moline, Illinois 61265.

Dated at Bethesda, Maryland, this 24th day of December 1986.

For the Nuclear Regulatory Commission.

John A. Zwolinski,

Director, BWR Project Directorate No. 1, Division of BWR Licensing.

[FR Doc. 87-252 Filed 1-6-87; 8:45 am]

BILLING CODE 7590-01-M

[Docket No. 030-29056; License No. 43-26821-01; EA 86-124]

Met-Chem Testing Laboratories of Utah, Inc.; Order Modifying License and Order To Show Cause

I

Met-Chem Testing Laboratories of Utah, Inc. (the licensee), 369 Gregson Avenue, Salt Lake City, Utah 84115, is the holder of both a general license pursuant to 10 CFR 150.20 and a specific license, License No. 43-26821-01, pursuant to 10 CFR Part 30, issued by the Nuclear Regulatory Commission (the Commission or NRC). The general license authorizes the licensee to conduct the same activity in non-Agreement States pursuant to the provisions of 10 CFR 150.20 as the licensee is authorized to conduct by its specific license from the State of Utah, an Agreement State. The NRC specific license authorizes the licensee to use the licensed materials in industrial radiography and replacement of sources, and to use an EON Model 64-764 calibrator for calibration of survey instruments at locations where NRC maintains jurisdiction.

II

In a written statement dated August 21, 1986, Mr. T. Pat James, a senior vice-president of the licensee, admitted that he typed a letter on or about June 28, 1984, and addressed it "To Whom It May Concern." He further admitted that he forged the signature of a radiographer to the letter and submitted the letter to Met-Chem Engineering Laboratories, Inc., the predecessor company to the current licensee, Met-Chem Testing Laboratories of Utah, Inc. The forged letter pertained to a radiation overexposure of that radiographer, which was reportable pursuant to 10 CFR 20.405. The letter falsely stated that the radiographer's dosimeter and badge were left in a shirt pocket and the shirt was placed in an area near a radiation source resulting in an overexposure reading, but not an overexposure to the radiographer himself. Mr. James stated that the reasons he wrote the foreged letter were (1) he did not want anything to stop the sale of certain Met-Chem Engineering Laboratories, Inc. properties to a third party and (2) he did not want the NRC to know about the overexposure since it would not have been desirable to have the NRC looking into the matter during the sale negotiation period. Furthermore, on August 13, 1986 Mr. James denied to an NRC inspector and an NRC investigator any knowledge of how the forged letter was generated. Thus, Mr. James deliberately forged the signature of a radiographer and made false statements to the NRC.

III

As stated above, false statements were made by a senior management employee of the licensee. Had the NRC been provided with correct information, inspection actions regarding the overexposure would have been taken. Further, had the NRC known that a senior management employee of the licensee had withheld reportable information concerning radiation exposures, the specific license, License No. 43-26821-01, would have been issued. The false statements made by Mr. James, a senior management employee of the licensee, call into question his candor in dealing with the NRC and demonstrate that there is no longer reasonable assurance that the licensee will comply with NRC requirements while Mr. James is involved in licensed activities. Because I have determined that the false statements and withholding of information were willful, pursuant to 10 CFR 2.201(c) and 2.202(f), no prior notice is required and I am ordering that the proposed action be immediately effective.

IV

Accordingly, pursuant to sections 81, 161b., 161i., 182, and 186 of the Atomic Energy Act of 1954, as amended, and the Commission's regulations in 10 CFR 2.202 and 10 CFR Part 30, it is hereby ordered, immediately effective, that:

A. License No. 43-26821-01 is amended by adding the following condition:

T. Pat James shall be removed from any assignment or position influencing or involving the performance or supervision of any licensed activities (e.g., as an authorized user), including the supervision of any Radiation Safety Officer.

B. The licensee shall show cause in the manner hereinafter provided why the license amendment set out in paragraph IV. A above should not become permanent.

C. T. Pat James shall be removed from any assignment or position influencing or involving the performance or supervision of any licensed activities permitted under the general license issued pursuant to 10 CFR 150.20.

D. The licensee shall show cause in the manner hereinafter provided why the provisions in paragraph C above should not become permanent.

E. Prior to conducting any licensed activities after receipt of this Order, the licensee shall (1) notify in writing all personnel involved in the performance and supervision of licensed activities at Met-Chem Testing Laboratories of Utah, Inc. of this Order and the importance of strict adherence to NRC requirements and complete candor with NRC personnel and (2) certify to the NRC that each Authorized User and RSO has read the notification and Order and understands its contents.

F. The NRC Region IV Regional Administrator may relax or rescind any of the above provisions for good cause shown by the licensee.

V

The licensee may show cause why this Order should not have been issued and should be vacated by filing a written answer under oath or affirmation within 30 days of the date of this Order which sets forth the matters of fact and the law on which the licensee relies. The licensee may answer as provided in 10 CFR 2.202(d) by consenting to this Order. If the licensee fails to answer within the specified time, this Order shall be final without further proceedings.

The licensee or any other person who has an interest adversely affected by this Order may request a hearing on this Order within 30 days of the date of its issuance. Any answer to this Order or any request for hearing shall be submitted to the Director, Office of Inspection and Enforcement, Nuclear Regulatory Commission, Washington, DC 20555. Copies shall be sent to the Assistant General Counsel for Enforcement at the same address and to the Regional Administrator, Nuclear Regulatory Commission, Region IV, 611 Ryan Plaza Drive, Suite 1000, Arlington, Texas 76011. If a person other than the licensee requests a hearing, that person shall set forth with particularity the

manner in which the petitioner's interest is adversely affected by this Order and should address the criteria set forth in 10 CFR 2.714(d). An answer to this Order or a request for hearing shall not stay the immediate effectiveness of section IV of this Order.

If a hearing is requested, the Commission will issue an Order designating the time and place of any hearing. If a hearing is held, the issue to be considered at such a hearing shall be whether this Order should be sustained.

Dated at Bethesda, Maryland, this 30th day of December 1986.

For the Nuclear Regulatory Commission.

James M. Taylor,

Director, Office of Inspection and Enforcement.

[FR Doc. 87-254 Filed 1-6-87; 8:45 am]

BILLING CODE 7590-01-M

[Docket No. 50-029]

Yankee Atomic Power Co. (Yankee Nuclear Power Station); Exemption

I

Yankee Atomic Power Company (the licensee) is holder of Facility Operating License No. DPR-3 which authorizes operation of the Yankee Nuclear Power Station (Yankee) (the facility) at steady-state reactor power levels not in excess of 600 megawatts thermal (rated power). Yankee consists of a pressurized water reactor (PWR) located at the licensee's site in Franklin County, Massachusetts. The license provides, among other things, that it is subject to all rules, regulations, and Orders of the Nuclear Regulatory Commission (the Commission) now or hereafter in effect.

II

Section 50.44(c)(3)(iii) of 10 CFR Part 50 requires a licensee to provide high point vents for the reactor coolant system and the reactor vessel head to provide improved operational capability to maintain adequate core cooling following an accident beyond the design basis of the plant. The vents are to be designed to remove noncondensible gases that might result in loss of function of cooling systems. The high point vents are to be remotely operated from the control room. Also, the vent system shall be designed to ensure a low probability that there would be inadvertent actuation.

When originally installed, the Yankee high point vents were operable from the control room, except in the event of loss of non-emergency power. Operator action outside the control room (in the switchgear room) was necessary to provide emergency power to the vent valves. It would have required about 30 minutes for an operator to complete the necessary actions for backfeeding of the buses from the emergency diesel generators. This design was approved by the staff as satisfying the requirements of TMI Action Plan Item II.B.1 Reactor Coolant System Vents, on September 14, 1983.

Subsequently, the licensee has changed the power supplies so the valves could be powered from emergency buses. However, there is a potential for a control room fire to cause inadvertent actuation of the valves. As part of their commitments to satisfy 10 CFR 50.48 and Appendix R to Part 50 (Fire Protection Requirements), the licensee has proposed to remove power from the valves during normal plant operations and to locate the power supply switches in an accessible area outside the control room (the switchgear room). Once the switches are closed, the vents can be remotely operated and controlled from the control room. The licensee's approach is not in strict compliance with the requirements of § 50.44(c)(3)(iii) that the vent valves be remotely operated from the control room. Therefore, by letter dated October 3, 1986, the licensee requested an exemption from the requirement for control room operability of the reactor coolant system high point vents.

In the October 3, 1986 submittal, the licensee provided information relevant to the "special circumstances" finding required by revised 10 CFR 50.12(a) (See 50 FR 50764). The licensee stated that strict interpretation of ". . . operated from the control room" is not necessary to accomplish the underlying purpose of the rule. The rule requires the vents to be remotely operated from the control room for accessibility, operational capability and ease of control and monitoring of the vent function. Once the operator action to restore power is complete, the vents can be operated and controlled from the control room. The power switches are located in the switchgear room, which would be easily accessible to the control room after an accident requiring operation of the valves. Modifying the system so that the valves could be continuously powered without the concern for inadvertent operation in the event of a fire, would require the expenditure of engineering and constuction resources that would represent an unwarranted burden on licensee resources without a corresponding significant increase in safety. Therefore, the staff concludes that special circumstances exist for the licensee's requested exemption in that application of the regulation in these particular circumstances is not necessary to achieve the underlying purposes of 10 CFR 50.44(c)(3)(iii). See 10 CFR 50.12(a)(2)(ii).

The Commission staff has found that the operability provisions for the reactor system vents, as described in the licensee's October 15, 1985 and October 3, 1986 letter, are acceptable because:

1. The power supplies for the valves will be located in the switchgear room, which is directly below the control room. In the event of an accident requiring operation of the vents, this room would be readily accessible.

2. The operator action required to restore power to the valves is very straightforward (operating four switches). Operators would have ample time following a severe accident to restore power to the vent line valves. This is because of the vents is not postulated until during the recovery phase of an accident when core cooling by natural circulation has been restored so that the reactor system can be cooled and depressurized. If a bubble of noncondensible gas were present in the reactor vessel head, the gas could be relieved through the vent lines to prevent its accumulating and entering the steam generators. If the gas entered the steam generators, natural circulation would be retarded. Since use of the events is not postulated until the recovery period after an accident when core cooling has been restored, the staff concludes that ample time will be available to restore power to the valves in the vent lines.

3. Once power is restored, the valves can be remotely operated from the control room.

4. The four vent valves will be directly powered from emergency buses so no additional operator actions are needed to allow operation of the valves in the event of loss of offsite power.

5. The proposed design would reduce the likelihood of spurious actuation of the vents in the event of a control room fire. Low probability of spurious actuation is also a requirement of § 50.44(c)(3)(iii).

Based on the above reasons the staff has concluded that, while the reactor coolant system high point vents do not meet the explicit requirements of 10 CFR 50.44(c)(3)(iii) regarding control room operability, the presently installed system provides an adequate level of safety and that the requested exemption should be granted.

III

Accordingly, the Commission has determined that, pursuant to 10 CFR 50.12(a)(i), the exemption requested by the licensee's letter of October 3, 1986, is

authorized by law, will not present an undue risk to the public health and safety, and is consistent with the common defense and security. In addition, the Commission has determined that, pursuant to 10 CFR 50.12(a)(2)(ii), special circumstances are present for this exemption in that application of the regulation in the particular curcumstances is not necessary to achieve the underlying purposes of the rule. The Commission hereby grants to the licensee an exemption from the requirements of 10 CFR 50.44(c)(3)(iii) with respect to control room operability requirements for the reactor coolant system high point vents.

Pursuant to 10 CFR 51.32, the Commission has determined that the issuance of the exemption will have no significant impact on the environment (October 28, 1986, 51 FR 39441).

For further details with respect to this action, see the licensee's requests dated October 15, 1985 and October 3, 1986, which are available for public inspection at the Commission's Public Document Room, 1717 H Street NW., Washington, DC 20555, and at the Greenfield Community College, 1 College Drive, Greenfield, Massachusetts 01301.

This exemption is effective upon issuance.

Dated at Bethesda, Maryland, this 29th day of December, 1986.

For the Nuclear Regulatory Commission.

Thomas M. Novak,

Acting Director, Division of PWR Licensing-A.

[FR Doc. 87-253-Filed 1-6-87; 8:45 am]

BILLING CODE 7590-01-M

State of Illinois; Staff Assessment of Proposed Agreement Between the NRC and the State of Illinois

Editorial Note: The following document was originally published at page 47327 in the issue of Wednesday, December 31, 1986. The document is being republished at the request of the agency.

AGENCY: Nuclear Regulatory Commission.

ACTION: Notice of proposed agreement with State of Illinois.

SUMMARY: Notice is hereby given that the U.S. Nuclear Regulatory Commission is publishing for public comment the NRC staff assessment of a proposed agreement received from the Governor of the State of Illinois for the assumption of certain of the Commission's regulatory authority pursuant to Section 274 of the Atomic Energy Act of 1954, as amended. Comments are requested on the public health and safety aspects of the proposal.

A staff assessment of the State's proposed program for control over sources of radiation is set forth below as supplementary information to this notice. A copy of the proposed agreement, program narrative, including the referenced appendices, applicable State legislation and Illinois regulations, is available for public inspection in the Commission's public document room at 1717 H Street NW., Washington, D.C., the Commission's Region III Office, 799 Roosevelt Road, Building No. 4, Glen Ellyn, Illinois, and the Illinois Department of Nuclear Safety, 1035 Outer Park Drive, Springfield, Illinois. Exemptions from the Commission's regulatory authority, which would implement this proposed agreement, have been published in the **Federal Register** and codified as Part 150 of the Commission's regulations in Title 10 of the Code of Federal Regulations.

DATE: Comments must be received on or before January 30, 1987.

ADDRESSES: Written comments may be submitted to the Rules and Procedures Branch, Division of Rules and Records, Office of Administration, U.S. Nuclear Regulatory Commission, Washington, DC 20555. Comments may also be delivered to Room 4000, Maryland National Bank Building, Bethesda, Maryland from 8:15 a.m. to 5:00 p.m. Monday through Friday. Copies of comments received may be examined at the NRC Public Document Room, 1717 H Street NW., Washington, DC.

FOR FURTHER INFORMATION CONTACT: Joel O. Lubenau, Office of State Programs, U.S. Nuclear Regulatory Commission, Washington, D.C. 20555, telephone: 301-492-9887.

SUPPLEMENTARY INFORMATION: Assessment of Proposed Illinois Program to Regulate Certain Radioactive Materials Pursuant to Section 274 of the Atomic Energy Act of 1954, as amended.

The Commission has received a proposal from the Governor of Illinois for the State to enter into an agreement with the NRC whereby the NRC would relinquish and the State would assume certain regulatory authority pursuant to Section 274 of the Atomic Energy Act of 1954, as amended.

Section 274e of the Atomic Energy Act of 1954, as amended, requires that the terms of the proposed agreement be published for public comment once each week for four consecutive weeks. Accordingly, this notice will be published four times in the **Federal Register.**

I. Background

A. Section 274 of the Atomic Energy Act of 1954, as amended, provides a mechanism whereby the NRC may transfer to the States certain regulatory authority over agreement materials [1] when a State desires to assume this authority and the Governor certifies that the State has an adequate regulatory program, and when the Commission finds that the State's program is compatible with that of the NRC and is adequate to protect the public health and safety. Section 274g directs the Commission to cooperate with the States in the formulation of standards for protection against radiation hazards to assure that State and Commission programs for radiation protection will be coordinated and compatible. Further, section 274j provides that the Commission shall periodically review such agreements and actions taken by the States under the agreements to ensure compliance with the provisions of this section.

B. In a letter dated October 2, 1986, Governor James P. Thompson of the State of Illinois requested that the Commission enter into an agreement with the State pursuant to section 274 of the Atomic Energy Act of 1954, as amended. The Governor certified that the State of Illinois has a program for control of radiation hazards which is adequate to protect the public health and safety with respect to the materials within the State covered by the proposed agreement, and that the State of Illinois desires to assume regulatory responsibility for such materials. The text of the proposed agreement is shown in Appendix A.

The specific authority requested is for (1) byproduct material as defined in section 11e.(1) of the Act, (2) source material, (3) special nuclear material in quantities not sufficient to form a critical mass and (4) permanent disposal of low-level waste containing one or more of the foregoing materials but not containing uranium and thorium mill tailings (byproduct material as defined in Section 11e.(2) of the Act. The State does not wish to assume authority over uranium recovery activities. The State, however, reserves the right to apply at a future date to NRC for an amended agreement to assume authority in this area. The nine articles of the proposed agreement cover the following areas:

[1] A. Byproduct materials as defined in 11e(1)
B. Byproduct materials as defined in 11e(2)
C. Source materials; and
D. Special nuclear materials in quantities not sufficient to form a critical mass

I. Lists the materials covered by the agreement.

II. Lists the Commission's continued authority and responsibility for certain activities.

III. Allows for future amendment of the agreement.

IV. Allows for certain regulatory changes by the Commission.

V. References the continued authority of the Commission for common defense and security for safeguard purposes.

VI. Pledges the best efforts of the Commission and the State to achieve coordinated and compatible programs.

VII. Recognizes reciprocity of licenses issued by the respective agencies.

VIII. Sets forth criteria for termination or suspension of the agreement.

IX. Specifies the effective date of the agreement.

C. Ill. Rev. Stat. 1985, ch. 127, par 63b17, the enabling statute for the Illinois Department of Nuclear Safety authorizes the Department to issue licenses to, and perform inspections of, users of radioactive materials under the proposed agreement and otherwise carry out a total radiation control program. Illinois regulations for radiation protection were adopted on September 25, 1986 under authority of the enabling statute and provide standards, licensing, inspection, enforcement and administrative procedures for agreement and non-agreement materials. Pursuant to § 330.360 the regulations will apply to agreement materials on the effective date of the agreement. The regulations provide for the State to license and inspect users of naturally-occurring and accelerator-produced radioactive materials.

D. Illinois is one of two States with a cabinet-level agency devoted exclusively to radiation safety and control. Illinois' role in radiation safety is traceable to 1955 when the Illinois General Assembly created the Atomic Power Investigating Commission. The Illinois Department of Nuclear Safety Program provides a comprehensive program encompassing radiation protection regulation for radioactive materials and machine produced radiation, lasers, low-level radioactive waste management, surveillance of transportation of radioactive materials and environmental radiation, coordination of State government functions concerning nuclear power and emergency preparedness.

E. The proposed Illinois Agreement will cover several unique facets. It will include (1) regulation of a low-level waste disposal site which is no longer accepting low-level radioactive waste for disposal (Sheffield), (2) regulation of a new regional low-level waste disposal facility, (3) regulation of one of only two licensed uranium conversion plants in the United States (Allied-Chemical) and (4) assumption of regulatory responsibility for off-site source material resulting from operation of the Kerr-McGee West Chicago Rare Earths Facility (including such material which is, or may be, stored on the Kerr-McGee site). Jurisdiction over the tailings materials at this site (by-product material as defined by Section 11e(2) of the Act) will remain with NRC. The State's proposed programs for low-level radioactive waste disposal and the Allied Chemical plant are assessed under Criteria nos. 9, "Radioactive Waste Disposal" and 20 "Personnel." The disposition of the regulatory responsibility for the Kerr-McGee radioactive materials resulting from the operation of the Rare Earths Facility is covered in the assessment under Criterion 25, "Existing NRC Licenses and Pending Applications."

Under the proposed agreement jurisdiction for health and safety for Allied Chemical's plant would be transferred to Illinois. The Allied Chemical plant is one of 2 plants in the United States licensed to convert uranium "yellowcake" to UF_6 NRC staff is reviewing the common defense and security significance of the Allied Chemical plant in consultation with appropriate Federal agencies. Section 274 agreements are approved by the Commission when, among other things, the proposed State program is adequate to protect the public health and safety. The NRC staff assessment finds the proposed Illinois program will provide adequately for public health and safety. The Atomic Energy Act, as amended, however, states that such agreements shall not affect the Commission's authority to protect the common defense and security. The decision on whether to exclude the Allied Chemical plant from the Agreement will be made by the Commission concurrent with its decision on the Illinois request for an Agreement.

II. NRC Staff Assessment of Proposed Illinois Program for Control of Agreement Materials

Reference: Criteria for Guidance of States and NRC in Discontinuance of NRC Regulatory Authority and Assumption Thereof by States Through Agreement.[2]

Objectives

1. Protection. A State regulatory program shall be designed to protect the health and safety of the people against radiation hazards.

Based upon the analysis of the State's proposed regulatory program the staff believes the Illinois proposed regulatory program for agreement materials is adequately designed to protect the health and safety of the public against radiation hazards.

Reference: Illinois Program Statement, Application for Agreement State Status.

Radiation Protection Standards

2. *Standards.* The State regulatory program shall adopt a set of standards for protection against radiation which shall apply to byproduct, source and special nuclear materials in quantities not sufficient to form a critical mass.

Statutory authority to formulate and promulgate rules for controlling exposure to sources of radiation is contained in the enabling statute. In accordance with that authority, the State adopted radiation control regulations on September 25, 1986 which include radiation protection standards which would apply to byproduct, source and special nuclear materials in quantities not sufficient to form a critical mass upon the effective date of an agreement between the State and the Commission pursuant to section 274b of the Atomic Energy Act of 1954, as amended.

Reference: 32 ILL. ADM. CODE Parts 310, 320, 330, 340, 341, 350, 351, 370, 400 and 601.

3. *Uniformity in Radiation Standards.* It is important to strive for uniformity in technical definitions and terminology, particularly as related to such things as units of measurement and radiation dose. There shall be uniformity on maximum permissible doses and levels of radiation and concentrations of radioactivity, as fixed by 10 CFR Part 20 of the NRC regulations based on officially approved radiation protection guides.

Technical definitions and terminology contained in the Illinois Radiation Control Regulations including those related to units of measurement and radiation doses are uniform with those contained in 10 CFR Part 20.

Reference: 32 ILL. ADM. CODE 310.20, 3410.20, 350.30, 351.30, 370.20, and 601.20.

4. *Total Occupational Radiation Exposure.* The regulatory authority shall consider the total occupational radiation

[2] NRC Statement of Policy published in the Federal Register January 23, 1981 (46 FR 7540–7546), a correction was published July 16, 1981 (46 FR 36969) and a revision of Criterion 9 published in the Federal Register July 21, 1983 (48 FR 33376).

exposure of individuals, including that from sources which are not regulated by it.

The Illinois regulations cover all sources of radiation within the State's jurisdiction and provide for consideration of the total radiation exposure of individuals from all sources of radiation in the possession of a licensee or registrant.

Reference: 32 ILL. ADM. CODE 340.1010 to 340.1060.

5. *Surveys, Monitoring.* Appropriate surveys and personnel monitoring under the close supervision of technically competent people are essential in achieving radiological protection and shall be made in determining compliance with safety regulations.

The Illinois requirements for surveys to evaluate potential exposures from sources of radiation and the personnel monitoring requirements are uniform with those contained in 10 CFR Part 20. Additionally, for personnel dosimeters (except extremity dosimeters and pocket ionization chambers) that require processing, the accreditation criteria in the January 1, 1985 revision of 15 CFR 7b and in American National Standards Institute N13.11–1983, 1983 edition, must be met.

References: 32 ILL. ADM. CODE 340.2010, 340.2020 and 340.2070.

6. *Labels, Signs, Symbols.* It is desirable to achieve uniformity in labels, signs, and symbols, and the posting thereof. However, it is essential that there be uniformity in labels, signs, and symbols affixed to radioactive products which are transferred from person to person.

The prescribed radiation labels, signs and symbols are uniform with those contained in 10 CFR Parts 20, 30 thru 32 and 34. The Illinois posting requirements are also uniform with those of Part 20.

References: 32 ILL. ADM. CODE 330.220(g), 330.220(i), 330.280(d), 330.280(g), 340.2030 and .2040, 350.1050.

7. *Instruction.* Persons working in or frequenting restricted areas shall be instructed with respect to the health risks associated with exposure to radioactive materials and in precautions to minimize exposure. Workers shall have the right to request regulatory authority inspections as per 10 CFR 19, Section 19.16 and to be represented during inspections as specified in Section 19.14 of 10 CFR 19.

The Illinois regulations contain requirements for instructions and notices to workers that are uniform with those of 10 CFR Part 19.

Reference: 32 ILL. ADM. CODE Part 400.

8. *Storage.* Licensed radioactive material in storage shall be secured against unauthorized removal.

The Illinois regulations contain a requirement for security of stored radioactive material.

Reference: 32 ILL ADM. CODE 340.2060.

9. *Radioactive Waste Disposal.* (a) Waste disposal by material users. The standards for the disposal of radioactive References: 32 ILL. ADM. CODE 340.1060, 340.3010 to 340. 3110, Part 601; Section 151(a)(2), Pub. L. 97–425.

10. *Regulations Governing Shipment of Radioactive Materials.* The State shall to the extent of its jurisdiction promulgate regulations applicable to the shipment of radioactive materials, such regulations to be compatible with those established by the U.S. Department of Transportation and other agencies of the United States whose jurisdiction over interstate shipment of such materials necessarily continues. State regulations regarding transportation of radioactive materials must be compatible with 10 CFR Part 71.

The Illinois regulations are uniform with those contained in NRC regulations 10 CFR Part 71.

References: 32 ILL. ADM. CODE Part 341.

11. *Records and Reports.* The State regulatory program shall require that holders and users of radioactive materials (a) maintain records covering personnel radiation exposures, radiation surveys, and disposals of materials; (b) keep records of the receipt and transfer of the materials; (c) report significant incidents involving the materials, as prescribed by the regulatory authority; (d) make available upon request of a former employee a report of the employee's exposure to radiation; (e) at request of an employee advise the employee of his or her annual radiation exposure; and (f) inform each employee in writing when the employee has received radiation exposure in excess of the prescribed limits.

The Illinois regulations require the following records and reports licensees and registrants:

(a) Records covering personnel radiation exposures, radiation surveys, and disposals of materials.

(b) Records of receipt and transfer of materials.

(c) Reports concerning incidents involving radioactive materials.

(d) Reports to former employees of their radiation exposure.

(e) Reports to employees of their annual radiation exposure.

(f) Reports to employees of radiation exposure in excess of prescribed limits.

Reference: 32 ILL. ADM. CODE 310.40, 340.4010, 340.4030, 340.4050 and 400.130.

12. *Additional Requirements and Exemptions.* Consistent with the overall criteria here enumerated and to accommodate special cases and circumstances, the State regulatory authority shall be authorized in individual cases to impose additional requirements to protect health and safety, or to grant necessary exemptions which will not jeopardize health and safety.

The Illinois Department of Nuclear Safety is authorized to impose upon any licensee or registrant by rule, regulation, or order such requirements in addition to those established in the regulations as it deems appropriate or necessary to minimize danger to public health and safety or property.

Reference: 32 ILL. ADM. CODE 310.70.

The Department may also grant such exemptions from the requirements of the regulations as it determines are authorized by law and will not result in undue hazard to public health and safety or property.

Reference: 32 ILL. ADM. CODE 310.30.

Prior Evaluation of Uses of Radioactive Materials

13. *Prior Evaluation of Hazards and Uses, Exceptions.* In the present state of knowledge, it is necessary in regulating the possession and use of byproduct, source and special nuclear materials that the State regulatory authority require the submission of information on, and evaluation of, the potential hazards and the capability of the user or possessor prior to his receipt of the materials. This criterion is subject to certain exceptions and to continuing reappraisal as knowledge and experience in the atomic energy field increase. Frequently there are, and increasingly in the future there may be, categories of materials and uses as to which there is sufficient knowledge to permit possession and use without prior evaluation of the hazards and the capability of the possessor and user. These categories fall into two groups—those materials and uses which may be completely exempt from regulatory controls, and those materials and uses in which sanctions for misuse are maintained without pre-evaluation of the individual possession or use. In authorizing research and development or other activities involving multiple uses of radioactive materials, where an institution has people with extensive training and experience, the State regulatory authority may wish to provide a means for authorizing broad

use of materials without evaluating each specific use.

Prior to the issuance of a specific license for the use of radioactive materials, the Illinois Department of Nuclear Safety will require the submission of information on, and will make an evaluation of, the potential hazards of such uses, and the capability of the applicant.

References: 32 ILL. ADM. CODE 330.240 to 330.340 and Part 601; Illinois Program Statement, Sections II.B.1(a)(1) "Licensing," II.C.1(a)(3) "Regulating Low-Level Waste Disposal" and III.B. "Licensing."

Provision is made for the issuance of general licenses for byproduct, source and special nuclear materials in situations where prior evaluation of the licensee's qualifications, facilities, equipment and procedures are not required. The regulations grant general licenses under the same circumstances as those under which general licenses are granted in the Commission's regulations.

References: 32 ILL. ADM. CODE 330.210 and 330.220.

Provision is made for exemption of certain source and other radioactive materials and devices containing radioactive materials. The exemptions for materials covered by the Agreement are the same as those granted by NRC regulations.

References: 32 ILL. ADM. CODE 330.30 and 330.40.

14. *Evaluation Criteria.* In evaluating a proposal to use radioactive materials, the regulatory authority shall determine the adequacy of the applicant's facilities and safety equipment, his training and experience in the use of the materials for the purpose requested, and his proposed administrative controls. States should develop guidance documents for use by license applicants. This guidance should be consistent with NRC licensing and regulatory guides for various categories of licensed activities.

In evaluating a proposal to use agreement materials, the Illinois Department of Nuclear Safety will determine that:

(1) The applicant is qualified by reason of training and experience to use the material in question for the purpose requested in accordance with the regulations in such a manner as to minimize danger to public health and safety or property;

(2) The applicant's proposed equipment, facilities, and procedures are adequate to minimize danger to public health and safety or property; and

(3) The issuance of the license will not be inimical to the health and safety of the public.

Other special requirements for the issuance of specific licenses are contained in the regulations.

References: 32 ILL. ADM. CODE 330.250 to 330.280 and Part 601; Illinois Program Statement, Sections II.B.1.a(1) "Licensing" II.C.1.(a) "Low-Level Radioactive Waste Management" and III.B "Licensing."

15. *Human Use.* The use of radioactive materials and radiation on or in humans shall not be permitted except by properly qualified persons (normally licensed physicians) possessing prescribed minimum experience in the use of radioisotopes or radiation.

The Illinois regulations require that the use of radioactive materials (including sealed sources) on or in humans shall be by a physician having substantial experience in the handling and administration of radioactive material and, where applicable, the clinical management of radioactive patients.

Reference: 32 ILL. ADM. CODE 330.260(a), (b), and (c).

Inspection

16. *Purpose, Frequency.* The possession and use of radioactive materials shall be subject to inspection by the regulatory authority and shall be subject to the performance of tests, as required by the regulatory authority. Inspection and testing is conducted to determine and to assist in obtaining compliance with regulatory requirements. Frequency of inspection shall be related directly to the amount and kind of material and type of operation licensed, and it shall be adequate to insure compliance.

Illinois materials licensees will be subject to inspection by the Department of Nuclear Safety. Upon instruction from the Department, licensees shall perform or permit the Department to perform such reasonable tests and surveys as the Department deems appropriate or necessary. The frequency of inspections is dependent upon the type and scope of the licensed activities and will be at least as frequent as inspections of similar licensees by NRC. Generally, inspections will be unannounced.

References: 32 ILL. ADM. CODE 310.50, 310.60, 310.70 and 400.140(a); Illinois Program Statement, Section II.B.1.(a)(2) "Inspection and Compliance," Section III.C, "Inspection and Enforcement" and Section IV.C., "Division of Responsibilities."

17. *Inspections Compulsory.* Licensees shall be under obligation by law to provide access to inspectors.

Illinois regulations state that licensees shall afford the Department at all reasonable times opportunity to inspect sources of radiation and the premises and facilities wherein such sources of radiation are used or stored.

Reference: 32 ILL. ADM. CODE 310.50.

18. *Notification of Results of Inspection.* Licensees are entitled to be advised of the results of inspections and to notice as to whether or not they are in compliance.

Following Department inspections, each licensee will be notified in writing of the results of the inspection. The letters and written notices indicate if the licensee is in compliance and if not, list the areas of noncompliance.

Reference: Illinois Program Statement, Section II.B.1.(a)(2), "Inspection and Compliance," Section III.C, "Inspection and Enforcement" and Section IV.C., "Division of Responsibilities."

Enforcement

19. *Enforcement.* Possession and use of radioactive materials should be amenable to enforcement through legal sanctions, and the regulatory authority shall be equipped or assisted by law with the necessary powers for prompt enforcement. This may include, as appropriate, administrative remedies looking toward issuance of orders requiring affirmative action or suspension or revocation of the right to possess and use materials, and the impounding of materials; the obtaining of injunctive relief; and the imposing of civil or criminal penalties.

The Illinois Department of Nuclear Safety is equipped with the necessary powers for prompt enforcement of the regulations. Where conditions exist that create a clear presence of a hazard to the public health that requires immediate action to protect human health and safety, the Department may issue orders to reduce, discontinue or eliminate such conditions. The department actions may also include impounding of radioactive material, imposition of a civil penalty, revocation of a license, and requesting the State Attorney General to seek injunctions and convictions for criminal violations.

References: 32 ILL. ADM. CODE 310.70, 310.80, 310.90, 330.500; Ill. Rev. Stat. 1985, ch. 111½, pars. 219, 222, 223 and 224; Illinois Program Statement, Section II.B.1.(a)(2), "Inspection and Compliance," Section III.C, "Inspection and Enforcement" and Section IV.C., "Division of Responsibilities."

Personnel

20. *Qualifications of Regulatory and Inspection Personnel.* The regulatory agency shall be staffed with sufficient trained personnel. Prior evaluation of applications for licenses or

authorizations and inspection of licensees must be conducted by persons possessing the training and experience relevant to the type and level of radioactivity in the proposed use to be evaluated and inspected.

To perform the functions involved in evaluation and inspection, it is desirable that there be personnel educated and trained in the physical and/or life sciences, including biology, chemistry, physics and engineering, and that the personnel have had training and experience in radiation protection. The person who will be responsible for the actual performance of evaluation and inspection of all of the various uses of byproduct, source and special nuclear material which might come to the regulatory body should have substantial training and extensive experience in the field of radiation protection.

It is recognized that there will also be persons in the program performing a more limited function in evaluation and inspection. These persons will perform the day-to-day work of the regulatory program and deal with both routine situations as well as some which will be out of the ordinary. These people should have a bachelor's degree or equivalent in the physical or life sciences, training in health physics, and approximately two years of actual work experience in the field of radiation protection.

The foregoing are considered desirable qualifications for the staff who will be responsible for the actual performance of evaluation and inspection. In addition, there will probably be trainees associated with the regulatory program who will have an academic background in the physical or life sciences as well as varying amounts of specific training in radiation protection but little or no actual work experience in this field. The background and specific training of these persons will indicate to some extent their potential role in the regulatory program. These trainees, of course, could be used initially to evaluate and inspect those applications of radioactive materials which are considered routine or more standardized from the radiation safety standpoint, for example, inspection of industrial gauges, small research programs, and diagnostic medical programs. As they gain experience and competence in the field, the trainees could be used progressively to deal with the more complex or difficult types of radioactive material applications. It is desirable that such trainees have a bachelor's degree or equivalent in the physical or life sciences and specific training in radiation protection. In determining the requirement for academic training of individuals in all of the foregoing categories, proper consideration should be given to equivalent competency which has been gained by appropriate technical and radiation protection experience.

It is recognized that radioactive materials and their uses are so varied that the evaluation and inspection functions will require skills and experience in the different disciplines which will not always reside in one person. The regulatory authority should have the composite of such skills either in its employ or at its command, not only for routine functions, but also for emergency cases.

a. *Radioactive Materials Program*

i. *Personnel*

There are approximately 890 NRC specific licenses in the State of Illinois. Under the proposed agreement, the State would assume responsibility for about 800 of these licenses. The Department's Division of Nuclear Materials is currently staffed with 13 professional persons and has one vacancy. Including the Manager of the Office of Radiation Safety (in which the Division of Nuclear Materials is located), four individuals will be assigned management and supervisory duties in the materials program. Exclusive of the low-level radioactive waste regulatory program and the regulatory oversight for a uranium conversion plant (discussed below) we estimate the State will need to apply between 7.9 to 12 staff-years of professional effort to the radioactive materials program. Illinois will apply about 14.4 staff-years to this program. The personnel together with summaries of their assigned responsibilities, training and experience are as follows (except as noted percentage of time devoted to the radioactive materials program will be 90% or more):

Terry R. Lash: Director, Illinois Department of Nuclear Safety, Governor's Designated Liaison to NRC. (10% of time devoted to materials program).

Training:

Ph.D.
—Yale University (1970)
—Molecular Biophysics and Biochemistry, Yale University

M.Ph.
—Molecular Biophysics and Chemistry
—Yale University (1967)

B.A.
—Reed College (1965)
—Physics Major

Experience:

1984–Present—Director, Illinois Department of Nuclear Safety
1983–1984—Deputy Director, Illinois Department of Nuclear Safety
1983–1983—Independent Consultant
1982–1983—Science Director, Scientists' Institute for Public Information, New York City
1981–1982—Independent Consultant
1980–1981—Director, Science and Public Policy, The Keystone Center, Dillon, Colorado
1972–1980—Staff Scientist, Natural Resources Defense Council, San Francisco, California
1970–1972—Postdoctoral Research Fellow, Yale University Medical School, New Haven, Connecticut

Paul D. Eastvold: Manager, Office of Radiation Safety. Responsible for managing the programs, functions and activities of four technical divisions: Nuclear Materials, Electronic Products, Radiologic Technologist Accreditation and Medical Physics (33% of time devoted to materials program).

Training:

B.S.
—University of Iowa (1970)
—General Science/Nuclear Medicine Technology

"Specific Topics in Licensing: Contingency Plans," US NRC, San Francisco, CA (1986)
"Impact of Proposed Changes to 10 CFR 20," Technical Management Services, Inc., Gaithersburg, Maryland (1986)
"Large Irradiation Radiation Safety Workshop," US NRC, New Jersey (1985)
"Incinertion of Radioactive Material Workshop," University of California (1984)
"Transportation of Radioactive Materials," US NRC, Illinois (1983)
"Recognition, Evaluation, and Control of Non-Ionizing Radiation," US Dept. of Labor, Illinois (1981)
"Inspection Procedures," US NRC, Illinois (1980)
"Safety Aspects of Industrial Radiography," US NRC, Louisiana (1980)
"Quality Assurance in Nuclear Medicine," US FDA, Maryland (1979)
"Health Physics in Radiation Accidents," Oak Ridge Associated Universities, Tennessee (1979)
"Laser Safety Seminar," US Food and Drug Admin., Wisconsin (1979)

"Radiological Response Operations Training Course," US NRC, Nevada (1978)
"Radiopharmacies—Problems and Solutions," Univ. of Southern California, California (1978)
"Radiological Emergency Response Planning Course," US NRC, Minnesota (1977)
"Health Physics and Radiation Protection," US NRC, Tennessee (1977)
"Fundamentals of Non-Ionizing Radiation Protection," U.S. Food and Drug Administration, Maryland (1973)
"Licensing Course—Byproduct, Source, and Special Nuclear Materials," US NRC, Maryland (1972)

Experience:

1980–Present—Illinois Department of Nuclear Safety
1971–1980—Illinois Department of Public Health, Division of Radiological Health
1970–1971—University of Iowa Radiation Protection Office

Michael Ewan: Chief, Division of Nuclear Materials. Manages the Division including supervision of staff and establishment of program objectives.

Training:

M.A.
—Sangamon State University, IL (1980)
—Business Administration
B.S.
—University of Iowa (1971)
—General Science/Nuclear Medicine Technology
"Uranium and Thorium: A Perspective on the Hazard," Radiation Safety Associates, Inc., Springfield, Illinois (1986)
"Special Topics in Licensing: Contingency Plans," US NRC, San Francisco, CA (1986)
"Incineration Basics," Univ. of California, Irvine, Charlotte, N.C. (1986)
"Basic Supervision," Keye Productivity Center, Springield, Illinois (1986)
"Impact of Proposed Changes to 10 CFR 20," Technical Management Services, Inc., Gaithersburg, Maryland (1986)
"Transportation of Radioactive Materials," US DOE, Illinois (1985)
"Technical Writing," Richmond Staff Development, Illinois (1985)
"Health Physics and Radiation Protection," Oak Ridge Associated Universities, Tennessee (1985)
"Gas and Oil Well Logging," US NRC, Texas (1984)
"Licensing Practices and Procedures," US NRC, Maryland (1984)
"Transportation of Radioactive Materials," US NRC, Illinois (1983)
"Current Applications of Nuclear Imaging," Siemens Gammasonics, Inc., Illinois (1981)
"Nuclear Cardiology," Univ. of Wisconsin, Wisconsin (1980)

Experience:

1982–Present: Illinois Department of Nuclear Safety
1973–1982: St. John's Hospital, Springfield, Illinois
1981: Lincoln Land Community College, Springfield, Illinois (Instructor)
1973–1977: Nuclear Medicine Institute, Ohio (Affiliate Instructor)
1971–1973: Wesley Medical Center, Kansas

Jou-Guang (Joe) Hwang: Licensing Section Head, Division of Nuclear Materials. Responsible for supervising the review of radioactive material license applications.

Training:

Ph.D.—Purdue University (1985)
—Health Physics
MSPH—University of South Carolina (1981)
—Industrial Hygiene and Environmental Quality Assessment
B.S.—National Taiwan University (1978)
—Pharmacy
"Uranium and Thorium: A Perspective on the Hazard," Radiation Safety Associates, Inc., Springfield, Illinois (1986)
"External Dosimetry," Health Physics Society, State College, Pennsylvania (1986)
"Introduction to Licensing Practices and Procedures," US NRC, Bethesda, Maryland (1986)
"Medical Uses of Radionuclides for State Regulatory Personnel," US NRC, Oak Ridge Tennessee (1986)

Experience:

1986–Present: Illinois Department of Nuclear Safety
1983–1986: Purdue University, Graduate Teaching Instructor, School of Pharmacy, Nursing and Health Sciences
1980–1982: Purdue University, Graduate Research Instructor, School of Health Sciences
1980–1981: University of South Carolina, Graduate Teaching Assistant, Department of Environmental Health Sciences
1980–1980: University of South Carolina, Graduate Research Assistant, Department of Environmental Health Sciences
1978–1979: The Church of Taipei, Minister, Taipei, Taiwan
1978–1979: Yun-Fu Pharmaceutical Ltd., Pharmacist, Taipei, Taiwan
1977–1977: National Taiwan University, Hospital, Pharmacy Intern, Taipei, Taiwan
1977–1977: Pfizer Pharmaceutical Company, Assistant Pharmacist (Intern), Tan-Shui, Taiwan ROC

Y. David La Touche: Radioactive Materials License Reviewer, Division of Nuclear Materials. Performs reviews of radioactive material license applications and performs inspections of radioactive materials licensees.

Training:

Ph.D.—Oregon State University (1981)
—Radiation Biology
M.S.—Oregon State University (1978)
—Biological Science
B.S.—Concordia University, Montreal, Canada (1976)
—Biology
"Special Topics in Licensing: Contingency Plans," US NRC, San Francisco, CA (1986)
"Health Physics and Radiation Protection," US NRC, Oak Ridge, Tennessee (1986)
"Uranium and Thorium: A Perspective on the Hazard," Radiation Safety Associates, Inc., Springfield, Illinois (1986)
"Introduction to Licensing Practices and Procedures," US NRC, Bethesda, Maryland (1986)

Experience:

1986—Present: Illinois Department of Nuclear Safety
1982–1986: Oregon State University, Corvallis, Oregon Research Associate
1979–1981: Oregon State University, Corvallis, Oregon Graduate Research Associate
1977–1979: Oregon State University, Corvallis, Oregon Graduate, Teaching Assistant

Yu-Ann Stephen Hsu: Radioactive Materials License Reviewer, Division of Nuclear Materials. Performs reviews of radioactive material license applications and performs inspections of radioactive materials licensees.

Training:

M.S.—Old Dominion University (1982)
—Norfolk, Virginia
—Physics
B.S.—Tam Kang College of Arts and Sciences
—Physics
"Introduction to Air Toxics," US EPA, Kansas City, Missouri (1985)
"Health Physics and Radiation Protection," US NRC, Oak Ridge, Tennessee (1984)
"Safety Aspects of Industrial Radiography for State Regulatory Personnel," US NRC, Baton Rouge, Louisiana (1984)

"Cobalt Teletherapy Calibration," US NRC, Houston, Texas (1984)
"Medical Use of Radionuclides for State Regulatory Personnel," US NRC, Tennessee (1984)
"Gas and Oil Well-Logging for State Regulatory Personnel," US NRC, (1983)
"Hazardous Waste Management," Old Dominion University, Virginia Beach, Virginia (1982)
"Inspection Procedures," US NRC, Atlanta, Georgia (1986)

Experience:

1986–Present: Illinois Department of Nuclear Safety
1985–1986: Iowa Electric Light & Power Company, Cedar Rapids, Iowa, Radiological Engineer
1982–1985: Kansas Department of Health and Environment, Topeka, Kansas, Radiation Control Inspector
1981–1982: Eastern Virginia Medical Authority, Norfolk, Virginia, Assistant Radiation Safety Officer
1980–1981: Eastern Virginia Medical Authority, Norfolk, Virginia, Radiation Safety Research Technician
1979–1980: Old Dominion University Norfolk, Virginia, Research Assistant

Steve Meiners: Radioactive Materials License Reviewer, Division of Nuclear Materials. Performs reviews of radioactive material license applications and performs inspections of radioactive materials licensees.

Training:

M.S.—University of Arkansas for Medical Sciences (1985)
—Radiation Health Physics
B.A.—Harding University (1981)
—Biology
"Medical Uses of Radionuclides for State Regulatory Personnel," US NRC, Oak Ridge, Tennessee (1986)

Experience:

1985–1986: Texas Tech University, Radiation Safety Officer
1984–1984: University of Arkansas, Graduate Assistant
1981–1984: University of Ankansas, Laboratory Technologist
1981–1983: University of Arkansas, Aquatic Ecologist
1980–1981: Harding University, Teaching Assistant

Sheryl O. Soderdahl: Support Services Section Head, Division of Nuclear Materials. Responsible for the Division's data processing system and registration program, assists in license reviews and inspections, assists in review and revision of regulations and standards and serves as the Department's Radiation Safety Officer.

Training:

B.S.—Purdue University, Indiana (1980)
—Health Physics
"Inspection Procedures," US NRC, Atlanta, Georgia (1985)
"Writing for Results," Sangamon State University, Springfield, Illinois (1985)
"Introduction to Licensing Practices and Procedures," US NRC, Washington, D.C. (1985)
"Environmental Health Practices," University of Massachusetts, Amherst, Massachusetts (1982)

Experience:

1985–Present: Illinois Department of Nuclear Safety
1980–1985: University of Massachusetts, Department of Environmental Health and Safety, Amherst, Massachusetts, Staff Health Physicist
1979–1979: Fermi National Accelerator Laboratory, Proton Department, Batavia, Illinois

Bruce J. Sanza: Inspection and Enforcement Section Head, Division of Nuclear Materials. Manages the inspection and enforcement program.

Training:

M.S.—Texas A & M University (1985)
—Nuclear Engineering (Health Physics)
B.S.—University of Virginia (1979)
—Nuclear Engineering
"Uranium and Thorium: A Perspective on the Hazard," Radiation Safety Associated, Springfield, Illinois (1986)
"Inspection Procedure," US NRC, Atlanta, Georgia (1986)
"Gas & Oil Well Logging for Regulatory Personnel," (Accepted for attendance at November, 1986 course, Houston, Texas)

Experience:

1986–Present: Illinois Department of Nuclear Safety
1983–1986: Texas A & M University, Health Physicist, College Station, Texas
1980–1983: Carolina Power & Light Company, Radiation Control Specialist, Hartsville, South Carolina

George E. Merrihew: Radioactive Materials License Inspector. Performs reviews of radioactive materials license applications and performs inspections of radioactive materials licensees.

Training:

M.A.—Sangamon State University (1972)
—Biology/Psychology
B.A.—Sangamon State University (1971)
—Biology/Psychology
A.A.—Springfield, College in Illinois (1969)
—General Science
"Radiological Emergency Response Operation," FEMA, Las Vegas, Nevada (1986)
"Medical Uses of Radionuclides," US NRC, Oak Ridge, Tennessee (1986)
"Gas and Well Logging for Regulatory Personnel," US NRC, Houston, Texas (1985)
"Radioactive Material Training Course: Hazardous Material Regulations of the United States Department of Transportation," Chicago, Illinois (1985)
"Safety Aspects of Industrial Radiography," US NRC, Baton Rouge, Louisiana (1985)
"Introduction to Licensing Practices and Procedures," US NRC, Bethesda, Maryland (1984)
"Inspection Procedures," US NRC, Atlanta, Georgia (1984)
"Health Physics and Radiation Protection," US NRC, Oak Ridge, Tennessee (1984)
"Radiation Protection Technology," Rockwell International, Energy Systems Group (1983)
"Transportation of Nuclear Materials," US NRC, Illinois (1983)
"Executive Development Academy," Illinois Department of Personnel, Illinois (1981)
"ANS Cobol Course," (1980); "Basic Systems Analysis: (1980); "General Introduction to Statistical Package for the Social Sciences" (1979); "DP Concepts" (1979); "IMS Environment Course" (1979); "Easytrieve/IMS Class" (1979); "Basics in Easytrieve," State of Illinois Data Processing Training Center (1977)
"Air Pollution Control Orientation," US EPA (1978)
"Community Hygiene," US HEW, Georgia (1978)
University of Illinois, School of Clinical Medicine, (1974)
University of Illinois, School of Basic Medical Sciences (1973)

Experience:

1983–Present: Illinois Department of Nuclear Safety
1974–1983: Illinois Department of Public Health, Division of Engineering
1971–1972: Sangamon State University, Department of Biology, Graduate Assistant
1965–1967: Memorial Medical Center, Clinical Laboratory

Lori Kim Podolak: Radioactive Materials License Inspector. Performs reviews of radioactive materials license applications and performs inspections of radioactive materials licensees.

Training:

M.S.—University of Lowell (1986)
—Radiological Sciences
B.S.—Kentucky Wesleyan College (1984)
—Physics

Experience:

1986–Present: Illinois Department of Nuclear Safety
1984–1986: University of Lowell
1985: Brookhaven National Laboratory
1983: Oak Ridge National Laboratory

Andrew S. Gulczynski: Chicago Inspection and Enforcement Section Head, Division of Nuclear Materials. Supervises Chicago office materials license inspectors.

Training:

B.S—Northeastern Illinois University (1981)
—Biology
"Five Week Health Physics and Radiation Protection Course," US NRC, Oak Ridge, Tennessee (1986)
"Internal Dose Assessment," Technical Management Services, Inc., Illinois (1985)
"Transportation of Radioactive Materials," US DOE, Chicago, Illinois (1985)
"Medical Uses of Radionuclides for State Regulatory Personnel," US NRC, Oak Ridge, Tennessee (1984)
"Safety Aspects of Industrial Radiography for State Regulatory Personnel," US NRC, Baton Rouge, Louisiana (1983)
"Inspection Procedures for State Regulatory Personnel," US NRC, Atlanta, Georgia (1983)
"Radiological Emergency Response Operations," FEMA, Las Vegas, Nevada (1983)

Experience:

1985–Present: Illinois Department of Nuclear Safety
1982–1985: Kansas Department of Health and Environment, Bureau of Radiation Control, Topeka, Kansas,
1981–1982: Argonne National Laboratory, Argonne, Illinois
1977–1981: Northeastern Illinois University, Chicago, Illinois

John D. Papendorf: Radioactive Materials License Inspector. Performs reviews of radiactive materials license applications and performs inspections of radioactive materials licensees.

Training:

N.M.T.—Oak Park Hospital (1975)
—Nuclear Medicine Technologist Certification
R.T.—Hines V.A. Hospital (1972)
—X-Ray Technologist Certification
A.S.—Central YMCA College (1972)
"Inspection of Transportation of Radioactive Materials," US NRC, Glen Ellyn, Illinois (1985)
"Nuclear Transportation for State Regulatory Personnel," US NRC, Columbia, South Carolina (1984)
"Hazardous Materials Training Course," US DOE, Chicago, Illinois (1983)
"Radiation Safety," Northwestern University, Evanston, Illinois (1982)
"Radiation Therapy Workshop, Medical Linear Accelerators," US Public Health Service, Chicago, Illinois (1981)
"Acceptance Testing of Radiological Imaging Equipment," American Association of Physicists in Medicine, American College of Radiology and Society for Radiological Engineering, Chicago, Illinois (1981)
"Safety Aspects of Industrial Radiography for State Programs," US NRC, Baton Rouge, Louisiana (1981)
"Inspection Procedures," US NRC, Glen Ellyn, Illinois (1980)
"Quality Assurance in Nuclear Medicine Departments," US Food and Drug Administration, Rockville, Maryland (1979)
"Radiological Emergency Response Operations Training Course for State and Local Government Emergency Preparedness Personnel," FEMA, Las Vegas, Nevada (1979)
"Special Procedures on CT Scanners," US Public Health Service, Chicago, Illinois (1976)
"Radiological Workshop," US Public Health Service, Chicago, Illinois (1976)

Experience:

1980–Present: Illinois Department of Nuclear Safety
1976–1980: Illinois Department of Public Health, Division of Radiological Health
1973–1976: Oak Park Hospital, Nuclear Medicine Technologist, Oak Park, Illinois
1972–1973: Oak Park Hospital, X-ray Technologist, Oak Park, Illinois

Robin Gehrhardt Bauer: Radioactive Materials License Inspector. Performs reviews of radioactive materials license applications and performs inspections of radioactive materials licensees.

Training:

M.S.—Emory University (1985)
—Radiological Physics
B.S.—University of Miami (1983)
—Biology
"Health Physics and Radiation Protection," US NRC, Oak Ridge, Tennessee (1986)

Experience:

1986–Present: Illinois Department of Nuclear Safety
1985–1985: Georgia Baptist Hospital, Internship, Medical Physics, Atlanta, Georgia
1985–1985: Emory University, X-ray, Nuclear Medicine, Calibration, Atlanta, Georgia
1983–1984: Loyola University, Research Technician, Maywood, Illinois

Joanne B. Kark: Radioactive Materials License Inspector. Performs reviews of radioactive materials license applications and performs inspections of radioactive materials licensees.

Training:

Graduate work toward M.S.—Colorado State University (1985)
—University of Tennessee (1982)
—Health Physics
B.S.—Villanova University (1975)
—Biology
Certificate—St. Joseph's Hospital and Medical Center School of Nuclear Medicine Technology, Paterson, New Jersey (1977)
"Inspection Procedures," US NRC, Atlanta, Georgia (1986)

Experience:

1986–Present: Illinois Department of Nuclear Safety
1981–1984: Oak Ridge National Laboratory, Health and Safety Research Division, Senior Laboratory Technician
1979–1981: Oak Ridge National Laboratory, Biology Division, Biological Technician
1977–1979: Radiology Associates, Albert Einstein Medical Center, No. Division, Nuclear Medicine Technologist.
1976–1977: SpectroChem Laboratories, Inc., Analytical Chemistry Technician

John W. Cooper: Manager, Office of Environmental Safety. Provides technical support to the Division of Nuclear Materials on an as needed basis.

Training:

Ph.D.—University of Iowa (1971)
—Radiation Biology
M.S.—University of Iowa (1966)
—Pharmacy
B.S.—Drake University (1960)
—Pharmacy
"Industrial Ventilation Systems," OSHA Training Institute, Illinois (1983)
"Respirator Safety for CSHO's," OSHA Training Institute, Illinois (1982)

Experience:

1981–Present: Illinois Department of Nuclear Safety
1975–1981: U.S. Nuclear Regulatory Commission, Region III, Inspector and license reviewer
1971–1975: Allegheny General Medical Center, Radiation Biology Laboratory
1964–1971: University of Iowa, Radiation research and teaching

Apparao Devata: Chief, Division of Medical Physics. Provides technical support to the Division of Nuclear Materials on an as needed basis.

Training:

Ph.D.—University of New Orleans (1975)—Physics
M.S.—University of New Orleans (1972)—Physics

MSc.—Andhra University (1968)—Applied Physics
BSc.—Andhra Loyola College (1965)—Mathematics
Experience:
1985–Present: Illinois Department of Nuclear Safety
1985: Medical Physics Consultant
1983–1985: St. James Hospital Medical Center, Chicago Heights, Illinois, Medical physicist
1975–1983: St. Joseph's Hospital, Elgin, Illinois, Medical physicist
1975: Mt. Sinai Hospital, Chicago, Illinois, Medical physicist
VA Hines Hospital, Hines, Illinois, Medical physicist
1969–1975: University of New Orleans Research and teaching

Reference: Illinois Program Statement, Section III, "Implementation of the Agreement State Program for Materials Licenses," Section IV.A.3, "Staff Requirements" and Appendix 5, "Current Agreement State Staff Positions: Byproduct Material, Source Material and Special Nuclear Materials in Quantities Not Sufficient to Form a Critical Mass."

b. Regulatory Oversight of Uranium Conversion Plant

i. *Personnel*

There are two plants in the United States which convert natural uranium oxide (yellowcake) to uranium hexafluoride. These activities are conducted pursuant to source materials licenses issued by the NRC. Under the proposed Agreement, the source material license for the Allied Chemical uranium conversion facility located in Metropolis will be transferred to Illinois.* The Office of Radiation Safety, Division of Nuclear Materials will be responsible for regulatory oversight with technical support from the Offices of Environmental Safety and Nuclear Facility Safety. Overall IDNS will commit 0.6 full-time equivalent professionals effort to this program. Key staff assigned to this program together with summaries of their duties and training and experience are:

(a) Staff previously identified in the materials program (Section 20.a)

Jou-Guang (Joe) Hwang, Y. David La Touche, Bruce J. Sanza, John W. Cooper.

(b) Other IDNS staff:

Lih-Ching Chu: Chief, Division of Radiochemistry Laboratories, Office of Environmental Safety. Supervises analytical support for all Department programs. Provides technical support in radiochemistry and radioanalysis.

Training:
Ph.D—Washington University (1981)—Chemistry
M.A.—Washington University (1978)
—Chemistry
M.S.—East Texas State University (1976)
—Chemistry
B.S.—Tamkang College of Arts and Sciences (1971)
—Chemistry
"Vax Applications Manager," Canberra Industries, Inc., CT, 1984
"Introduction to S-90-VMS Apogee System Operations," Canberra Industries, Inc., CT, 1984

Experience:
1984–Present: Illinois Department of Nuclear Safety
1981–1984: Illinois Department of Energy and Natural Resources
1976–1981: Washington University, St. Louis, Missouri
1974–1976: East Texas State University, Commerce, Texas
1973–1974: Young-Ho Middle School, Young-Ho, Taiwan, ROC
1971–1973: Military Service, Taiwan, ROC

David A. Filler: Assistance Chief, Division of Radiochemistry Laboratories, Office of Environmental Safety. Provides radiochemistry support.

Training:
Ph.D.—University of Michigan (1976)
—Biochemistry
M.S.—University of Michigan (1973)
—Biochemistry
B.S.—Purdue University (1969)
—Chemistry
"Vax Applications Manager," Canberra Industries, Inc., Connecticut (1984)
"Introduction to S-90-VMS Apogee System Operations," Canberra Industries, Inc., Connecticut (1984)
"Auditor Training," Gilbert/Commonweath (1984)
"Radiological Monitor," Indiana Department of Civil Defense and Emergency Management (1983)
"Radiochemistry for State Regulatory Personnel," NRC (1983)
"Radiological Monitoring, Sampling and Analysis of Nuclear Facilities," US DOE (1983)
"Radiological Emergency Response Training for State Government Emergency Preparedness Personnel," FEMA/US DOE (1982)

Experience:
1984–Present: Illinois Department of Nuclear Safety
1981–1984: Indiana State Board of Health, Radiochemistry Lab, Indianapolis, Indiana
1977–1981: Indiana University Medical Center, Indianapolis, Indiana
1976–1977: St. Jude Children's Research Hospital, Memphis, Tennessee

James F. Scheweitzer: Health Physicist, Office of Environmental Safety. Serves as a specialist in environmental monitoring and will provide technical support and guidance in this area.

Training:
Ph.D.—Purdue University (1985)
—Environmental Toxicology
M.S.—Purdue University (1981)
—Health Physics
B.S.—Randolph-Macon College (1976)
—Biology
Environmental Laws and Compliance Course
Short Course: Uranium and Thorium: A Perspective on the Hazard (1986)

Experience:
1986–Present: Illinois Department of Nuclear Safety
1985–1986: Purdue University, Office of Radiological and Chemical Control
1980–1980: Purdue University, Office of Radiological and Chemical Control

Michael H. Momeni: Chief, Low-Level Waste Siting Section, Office of Environmental Safety. Provides radiological and environmental support for the Office of Environmental Safety and will provide technical support for Allied Chemical regulatory actions.

Training:
Ph.D—University of Iowa
—Biophysics/Radiation Biology
M.S.—University of Iowa
—Nuclear Physics
B.A.—Luther College
—Physics-Mathematics

Experience:
1986–Present: Illinois Department of Nuclear Safety
1985–1986: Scientist, Oak Ridge Associated Universities, Oak Ridge, Tennessee
1983–1985: Professor-Director of Health Physics Program, San Diego State University, San Diego, California
1975–1983: Senior Scientist, Argonne National Laboratory, Argonne, Illinois
1970–1975: Biophysicist-Lecturer, The University of California, Davis, California
1962–1963: Science Teacher, Urbana Consolidated Schools, Iowa

Gary Wright: Manager, Office of Nuclear Facility Safety. Provides technical assistance concerning engineering principles and emergency planning and response.

*The Commission is considering whether continued NRC regulation of the Allied Chemical Plant is necessary in the interest of the common defense and security of the United States.

Training:
—Sangamon State University (1974)
—Degree approx. half complete in Public Administration
M.S.—University of Illinois (1965)
—Nuclear Engineering
B.S.—Millikin University (1964)
—Physics/Mathematics
"Management Education Workshop," Ill. Dept. of Personnel, Champaign (1978)
"International Symposium on Migration of Tritium in the Environment," International Atomic Energy Agency, California (1978)
"Radiological Emergency Response Operations," US NRC, Nevada (1977)
"Workshop on Collective Bargaining for Public Employees," Ill. Dept. of Personnel (1976)
"Administrative and Organizational Behavior," Ill. Dept. of Public Health (1975)
"Professional Engineering Review," Univ. of Ill. (1974)
"Response of Structures to External Forces, i.e., Earthquakes, Tornados, etc.," Penn. State Univ. (1968)

Experience:
1980–Present: Illinois Department of Nuclear Safety
1973–1980: Illinois Department of Public Health
1967–1973: Sangamo-Weston Electronics Company, Springfield, Illinois
1965–1967: Westinghouse Electric Company, Forrest Hills, Pennsylvania

Reference: Illinois Program Statement, Section III.D. "Allied Chemical Uranium Conversion Facility," Appendix 5, and Appendix 9, "Current Agreement State Staff Positions: Low-Level Radioactive Waste Management Program, Office of Environmental Safety."

c. Licensing and Regulation of Permanent Disposal of Low-Level Radioactive Waste

i. Personnel

The Office of Environmental Safety has responsibility for the low-level waste (LLW) management regulatory program which includes the Sheffield site and the regional waste disposal facility. The assessment of the regulatory framework is included under Criterion 9, "Radioactive Waste Disposal." The LLW and transportation management program is staffed by 13 technical staff members. The Manager of the Office of Environmental Safety will provide overall supervision and management and the Chief of the Office's Division of Nuclear Chemistry will provide laboratory support. Technical support will also be available from the Division of Nuclear Materials. These personnel and summaries of their duties are:

(a) Staff previously identified in the materials or uranium conversion plant regulatory oversight programs (Section 20 a and b):

Michael H. Momeni, Lih-Ching Chu, John W. Cooper, James F. Schweitzer.

(b) Other IDNS Staff:

Robert A. Lommler: Chief, Division of Waste and Transportation. Has responsibilities for implementing the Illinois LLW management act, supervises staff in the LLW program and manages the spent nuclear fuel and LLW shipment inspection program.

Training:
B.S.—Kent State University (1971)
—Chemistry
"10 CFR 61," US NRC, Springfield, Illinois (1986)
"Incinerator Basics," Univ. of California, Charlotte, N.C. (1986)
"Radioactive Material Transportation Workshop," US DOE, Chicago, Illinois (1985)
"10 CFR 61 Compliance," TMS, Inc., Washington, D.C. (1984)
"Radiological Protection Officer Course," U.S. Army (1978)
"Chemical Officer Advanced Course," U.S. Army (1978–1979)
"Transportation of Hazardous Materials by Air," US DOT (1972)
"Chemical Officer Basic Course," U.S. Army (1971)

Experience:
1984–Present: Illinois Department of Nuclear Safety
1979–1983: U.S. Army, Radiation Safety Officer, Ft. Riley, Kansas
1975–1978: U.S. Army, Mannehim, West Germany
1971–1975: U.S. Army, Edgewood, Maryland

Michael Klebe: Nuclear Safety Engineer. Serves as technical resource on LLW management environmental problems, decomissioning and disposal facility siting.

Training:
M.S.—Montana College of Mineral Science and Technology (1982)
—Mining Engineering
B.S.—Montana College of Mineral Science and Technology (1980)
—Mining Engineering

Experience:
1986–Present: Illinois Department of Nuclear Safety
1982–1986: Shell Mining Company, Houston, Texas and Elkhart, Illinois, Mining Engineer

David Flynn: Geologist. Evaluates geological and hydrologic factors relating to LLW management.

Training:
B.S.—Southern Illinois University (1979)
—Geology
"Uranium and Thorium: A Perspective on the Hazard," Radiation Safety Associates, Springfield, Illinois (1986)
"Corrective Actions for Containing and Controlling Ground Water Contamination," National Water Well Association, Columbus, Ohio (1986)
"A Standardized System for Evaluation of Groundwater Pollution Potential Using Hydrogeologic Setting," National Water Well Association, Denver, Colorado (1986)
"Groundwater Pollution and Hydrology," Princeton & Associates, Miami, Florida (1986)
"Engineering and Design of Waste Disposal Systems," Civil Engineering Department, Colorado State University, Fort Collins, Colorado (1985)
"Groundwater Monitoring Workshop," Illinois Department of Energy and Natural Resources, Champaign, Illinois (1984)
"Radiological Emergency Response Training for State and Local Government Emergency Preparedness Personnel," FEMA, Nevada Test Site (1983)

Experience:
1983–Present: Illinois Department of Nuclear Safety
1981–1983: Mine Geologist, Atlas Minerals Corporation, Moab, Utah
1980–1981: Associate Mine Geologist, Rancher's Exploration & Development Corporation, Albuquerque, New Mexico
1979–1980: Junior Geologist, Rancher's Exploration & Development Corporation, Albuquerque, New Mexico

Shannon M. Flannigan: Geologist. Reviews, interprets and evaluates geologic hydrologic, physical and environmental data related to environmental impact, design, location, construction and decommissioning of facilities.

Training:
B.S.—Drake University (1978)—Geology
A.A.—Springfield College in Illinois (1976)—Business
"Radiological Emergency Response," FEMA, Nevada (1986)
"Groundwater Contaminant Transport Modeling," Princeton University, Princeton, New Jersey (1986)
"A Standardized System for Evaluating Groundwater Pollution Using Hydrogeologic Settings," Denver, Colorado (1986)
"Groundwater Pollution & Hydrology," Princeton Associates, Princeton, New Jersey (1986)

"Borehole Geophysics Techniques for Solving Groundwater Problems," National Water Well Association, Denver, Colorado (1986)
"Soil Mechanics and Foundations," Lincoln Land Community College, Springfield, Illinois (1981)
"Environmental Risk Assessment," Sangamon State University, Springfield, Illinois (1985)
"Recognition, Evaluation, and Control of Ionizing Radiation," OSHA Training Institute, Illinois (1985)

Experience:

1985–Present: Illinois Department of Nuclear Safety
1984–1985: Hanson Engineers, Inc. Springfield, Illinois
1981–1984: Veesay Geoservice, Inc. Denver, Colorado
1978–1981: Hanson Engineers, Inc. Springfield, Illinois.

George T. FitzGerald: Nuclear Safety Engineer I. Principally responsible for geology.

Training:

B.A.–Humboldt State University, California (1968)—Geology
Post-Graduate Work: Education, Humboldt State University, Economic Evaluation, Colorado School of Mines, Golden, Colorado

Experience:

1986–Present: Illinois Department of Nuclear Safety
1984–1986: Boliden Minerals, Inc., Silver City, New Mexico
1980–1984: Minatome Corporation, Denver, Colorado
1975–1980: SOHIO, Seboyeta, New Mexico
1968–1975: Kerr McGee Corporation Grants, New Mexico

Dana M. Willaford: Nuclear Safety Supervisor. Responsible for overall operation of waste generator registration and inspection program.

Training:

M.P.A.—Sangamon State University (1983)
B.A.–University of Illinois (1981)—Political Science, Math/Physics Minor
"Radioactive Materials Transportation Course," US DOE, Kansas City, Missouri (1986)
"Uranium and Thorium: A Perspective on the Hazard," Radiation Safety Associates, Inc., Springfield, Illinois (1986)
"Recognition, Evaluation, and Control of Ionizing Radiation," OSHA, Des Plaines, Illinois (1985)
"Environmental Laws and Regulations Compliance Course," Government Institutes, Washington, D.C. (1985)
"Radiological Emergency Response Operations Course," FEMA, Nevada (1983)

Experience:

1983–Present: Illinois Department of Nuclear Safety
1981–1983: Illinois Department of Nuclear Safety/Sangamon State University (Graduate Public Service Intern)
1977–1981: University of Illinois (Student Worker)

Tim Runyon: Nuclear Safety Inspector. Assists the Chief, Waste & Transportation Management.

Training:

A.S.—Illinois Central College—Radiologic Technology
"Hazardous Materials Transportation Course," ISP, Illinois State Policy Academy, Springfield, Illinois (1985)
"Review of USDOT Regulations," US NRC, Hanford, Washington (1985)
"Evaluation and Control of Ionizing Radiation," OSHA, Argonne National Laboratory (1981)
"Emergency Response for Radiological Accidents," REECO, Las Vegas, Nevada (1981)

Experience:

1985–Present: Illinois Department of Nuclear Safety, Office of Environmental Safety
1979–1985: Illinois Department of Nuclear Safety, Office of Radiation Safety

Stephen B. Shafer: Nuclear Safety Inspector II. Performs inspections and health physics surveys.

Training:

Graduate Classes (non-degree) University of Illinois (1984)
B.S.—Western Illinois University (1983)—Geophysics
Hazardous Materials Transportation Enforcement Course, Illinois State Police, Springfield, Illinois (1986)
Radiological Emergency Response Operations Course, FEMA, Nevada (1986)
Short Course: Uranium and Thorium: A Perspective on the Hazard (1986)

Experience:

1986–Present: Illinois Department of Nuclear Safety
1984–1984: Illinois Department of Nuclear Safety, Summer Intern

Eric Schwing: Attorney. Provides legal counsel to the Director and technical staff in low-level radioactive waste management.

Training:

Ph.D. Candidate (presently enrolled), Michigan State University, Resource Development/Environmental Toxicology
Doctor of Laws (1982), Thomas M. Cooley Law School
B.A.—Michigan State University (1976)—Chemistry

Experience:

1986–Present: Illinois Department of Nuclear Safety
1978–1986: Michigan Department of Public Health
1973–1978: Michigan State University
1971–1972: William Beaumont General Hospital (U.S. Army)

Gregory P. Crouch: Chief, Division of Radioecology. Directs the Office's environmental surveillance program.

Training:

M.P.H.—University of Minnesota (1986)—Environmental Health
M.S.—Purdue University (1977)—Bionucleonics/Health Physics
B.S.—Purdue University (1975)—Biology
"Seminar on the Transportation of Nuclear Materials," US NRC, Springfield, Illinois (1983)
"Radiological Emergency Response Course," US DOE/FEMA, Nevada Test Site (1983)
"Inspection Procedures Course," US NRC, Atlanta, Georgia (1982)

Experience:

1986–Present: Illinois Department of Nuclear Safety
1981–1984: Illinois Department of Nuclear Safety
1977–1978: Indiana University Medical Center, Assistant Radiation Safety Officer
1976–1977: Purdue University, Radiological Services, Graduate Assistant

Gregory J. Shott: Nuclear Safety Supervisor. Supervises the Department's—Mobile Radiochemistry Laboratory.

Training:

M.S.—University of Michigan (1985), Fisheries
B.S.—University of New Hampshire (1981), Biology

Experience:

1986–Present: Illinois Department of Nuclear Safety
1985–1986: Environmental & Chemical Sciences, Inc.; Environmental Scientist
1984: Lawrence Livermore National Laboratory; Research Associate, Environmental Intern Program
1981–1984: University of Washington, Laboratory of Radiation Ecology, Research Assistant

David D. Ed: Assistant Manager, Office of Environmental Safety.

Training:

B.S.—University of Illinois, Urbana (1971)—Chemistry
"Radon Training for State Personnel," US EPA (1986)

"Comprehensive Health Physics," Rockwell International (1985)
"Biological Effects of Ionizing Radiation," Harvard University, School of Public Health (1982)
"Dose Projection, Accident Assessment and Protective Action Decision Making for Radiological Emergency Response," US NRC, FEMA (1980)
"Environmental Radiation Surveillance," Georgia Institute of Technology (1977)
"Radiological Emergency Response Operations Training," US NRC, ERDA (1977)
"Environmental Source Term Modeling," University of Chicago, Argonne National Laboratory (1971)

Experience:

1980–Present: Illinois Department of Nuclear Safety
1973–1980: Illinois Department of Public Health
1972–1973: Illinois Environmental Protection Agency

Abdul Khalique: Nuclear Safety Scientist I. Plans, implements and participates in radioanalytical programs.

Training:

Ph.D.—University of Birmingham, England (1976), Analytical Chemistry
M.S.—University of Karachi, Pakistan (1967), Chemistry
B.S.—University of Karachi, Pakistan (1964)
Quality Control Course, University of Business Administration, University of Karachi, Pakistan 1964)

Experience:

1986–Present: Illinois Department of Nuclear Safety
1981–1986: Department of Pharmacology, Southern Illinois University School of Medicine
1975–1980: Glaxo Laboratories (Pakistan), Ltd.
1968–1970: Opal Laboratories, Ltd. (Pakistan)

Melanie A. Hamel: Health Physicist. Functions as a health physics specialist in the environmental monitoring division.

Training:

B.S.—University of Lowell, MA (1977), Health Physics
University of Lowell, MA (1977), Environmental Monitoring and Surveillance, Health Physics Certification Review, Medical Health Physics
"Environmental Law and the Citizen," Sangamon State University, Springfield, Illinois
"Post-Accident Radiation Assessment," Northwestern University, Illinois
"Radiation Protection Instrumentation," Harvard University, Boston, MA
"Radon Training Session for State Personnel," US EPA

Experience:

1982–Present: Illinois Department of Nuclear Safety
1977–1981: Yankee Atomic Electric Company
1975: University of Lowell, Research Reactor Facility, Health Physics Technician

Michael V. Madonia: Nuclear Safety Associate. Performs technical duties concerning nuclear facility monitoring and environmental radiation control.

Training:

B.S.—University of Illinois
—Nuclear Engineering, Radiation Protection and Shielding
"Air Sampling for Radioactive Materials," Oak Ridge Associated Universities; Oak Ridge, Tennessee (1986)
"Personal Computer Applications in Health Physics," TMS, Inc.; Boston, MA (1986)
Nuclear-General Employee Training (NGET), Commonwealth Edison, Chicago, Illinois (1985)
"Radiation Detection and Measurement—Advanced Course," Eberline Analytical, Albuquerque, New Mexico (1985)
"Fundamentals of Ground Water Contamination," Geraghty & Miller, Chicago, Illinois (1985)

Experience:

1985–Present: Illinois Department of Nuclear Safety
1983–1984 (Summers): Illinois Department of Nuclear Safety

Richard Walker: Nuclear Policy Analyst. Performs review and analysis of Federal and State regulations.

Training:

Ph.D—Purdue University (1976)
—Sociology (Research Methods and Statistics)
M.S.—Purdue University (1974)
—Sociology
B.S.—Marietta College (1972)
—Sociology
Environmental Radiation Surveillance, Harvard University, Massachusetts (1985)
"Fundamentals of Radiation Safety," Radiation Safety Associates (1985)

Experience:

1985–Present: Illinois Department of Nuclear Safety
1978–1984: Chairman, Department of Sociology, Blackburn College, Carlinville, Illinois
1976–1978: Department of Sociology Muhlenberg College, Allentown, Pennsylvania

Teresa A. Adams: Nuclear Policy Analyst. Performs staff functions coordinating and assisting with the direction of office programs.

Training:

B.A.—Wellesley College (1981)
—German
Massachusetts Institute of Technology, Department of Urban Studies and Planning (1982–1984)
University of Hanover, West Germany; Department of Planning and Architecture (1981–1982)
Additional coursework in decision analysis, fundamentals of radiation protection, hazardous waste minimization

Experience:

1985–Present: Illinois Department of Nuclear Safety
1984: Parliamentary Research Service; Bonn, West Germany
1982–1984: Worked on a variety of projects dealing with policy development and dispute resolution in environmental issues

Paul E. Seidler: Nuclear Policy Analyst. Responsible for implementing the Illinois public participation plan, also performs as liaison with local government groups.

Experience:

M.A.—University of Chicago (1986)
—Public Policy
B.A.—University of Illinois (1983)
—Political Science, Communications Studies
Urban & Regional Information Systems Association, 1986 Annual Conference (1986)

Experience:

1986–Present: Illinois Department of Nuclear Safety
1985–1986: University of Chicago, Office of the Comptroller
1985–1985: Illinois Bureau of the Budget
1984–1985: Compass Health Plans
1984–1984: U.S. Senator Paul Simon
1982–1982: Creative Research Associates

Reference: Illinois Program Statement, (Section II.C.1.a), "Low-Level Waste Management," (Section II.C.1.b) "Sheffield Low-Level Waste Disposal Facility," Section IV.B, "Low-Level Radioactive Waste Management Program," and Appendices 5 and 9.

21. *Conditions Applicable to Special Nuclear Material, Source Material, and Tritium.* Nothing in the State's regulatory program shall interfere with the duties imposed on the holder of the materials by the NRC, for example, the duty to report to the NRC, on NRC prescribed forms (1) transfers of special nuclear material, source material, and tritium; and (2) periodic inventory data.

The State's regulations do not prohibit or interfere with the duties imposed by the NRC on holders of special nuclear material owned by the U.S. Department of Energy or licensed by NRC, such as the responsibility of licensees to supply to the NRC reports of transfer and inventory.

Reference: 32 ILL. ADM. CODE 310.10.

22. *Special Nuclear Material Defined.* The definition of special nuclear material in quantities not sufficient to form a critical mass, as contained in the Illinois regulations, is uniform with the definition in 10 CFR Part 150.

Reference: 32 ILL. ADM. CODE 310.20, Definition of Special Nuclear Material in Quantities Not Sufficient to Form a Critical Mass.

Administration

23. *Fair and Impartial Administration.* The Illinois statute and regulations provide for administrative and judicial review of actions taken by the Department of Nuclear Safety.

Reference: 32 ILL. ADM. CODE Part 200, 310.90, 310.110, 330.500, Part 400.

24. *State Agency Designation.* The Illinois Department of Nuclear Safety has been designated as the State's radiation control agency.

References: Enabling statute for Illinois Department of Nuclear Safety, Ill. Rev. Stat. 1985, ch. 127, par. 63b17.

25. *Existing NRC Licenses and Pending Applications.*

The Department has made provision to continue NRC licenses in effect temporarily after the transfer of jurisdiction. Such licenses will expire on the date of expiration specified in the NRC license.

With respect to the radioactive materials covered by the NRC license issued to Kerr-McGee Chemical Corporation for the West Chicago Rare Earth's Facility (Docket No. 40-2061-SC) the NRC staff has determined that the radioactive materials at the facility are most appropriately treated as thorium mill tailings, i.e., byproduct materials are defined in Section 11e.(2) of the Atomic Energy Act of 1954, as amended, whereas the thorium-bearing materials recovered from off-site residential properties and sewer treatment plant in West Chicago and stored at the Kerr-McGee facility are source material. The former material [11e(2) by product material] will not be subject to the Agreement and NRC will retain regulatory jurisdiction. The latter material will be regulated by IDNS when the Agreement becomes effective.

Radiologically contaminated materials in Kress Creek and in Reed-Keppler Part, West Chicago have also been determined by NRC staff to be source material. The former is the subject of an Atomic Safety and Licensing Board (ASLB) Proceeding ([Docket 40-2061-SC (ASLBP No 84-502-01-SC)]. In the Kress Creek proceeding, in which Kerr-McGee and the People of the State of Illinois are parties, the ASLB found that the presence of this material in Kress Creek and the West Branch of the DuPage River probably resulted from the conduct of an NRC (and AEC) licensed activity at the West Chicago Rare Earths Facility. The ASLB, however, declined to require clean-up of the Creek and River based upon its analysis of the hazard posed by the radiologically contaminated material. The NRC staff has appealed that decision to the Atomic Safety and Licensing Appeal Board, but a decision on appeal has not yet been issued. Jurisdiction over source material in Kress Creek and the West Branch of the DuPage River will be relinquished to Illinois when the Agreement becomes effective. At that time, the NRC staff will request termination of the ASLB proceeding. Jurisdiction over the source material in Reed-Keppler Park will also be relinquished to Illinois when the Agreement becomes effective.

With respect to the Sheffield low-level radioactive waste disposal site, jurisdiction will be relinquished by the NRC to Illinois when the Agreement becomes effective. At that time, NRC staff will request termination of the ASLB proceeding [Docket 27-39-SC (ASLB No. 78-374-01-OT)].

Reference: 32 ILL. ADM. CODE 330.360.

26. *Relations With Federal Government and Other States.* There should be an interchange of Federal and State information and assistance in connection with the issuance of regulations and licenses or authorizations, inspection of licensees, reporting of incidents and violations, and training and education problems.

The proposed agreement declares that the State will use its best efforts to cooperate with the NRC and the other Agreement States in the formulation of standards and regulatory programs for the protection against hazards of radiation and to assure that the State's program will continue to be compatible with the Commission's program for the regulation of like materials.

Reference: Proposed Agreement between the State of Illinois and the Nuclear Regulatory Commission, Article VI.

27. *Coverage, Amendments, Reciprocity.*

The proposed Illinois agreement provides for the assumption of regulatory authority over the following categories of materials within the State:

(a) Byproduct material, as defined by Section 11e(1) of the Atomic Energy Act, as amended.

(b) Source materials.

(c) Special nuclear materials in quantities not sufficient to form a critical mass.

(d) The land disposal of source, byproduct and special nuclear material received from other persons.

Reference: Proposed Agreement, Article I.

Provision has been made by Illinois for the reciprocal recognition of licenses to permit activities within Illinois of persons licensed by other jurisdictions. This reciprocity is like that granted under 10 CFR Part 150.

Reference: 32 ILL. ADM. CODE 330.900.

28. *NRC and Department of Energy Contractors.*

The State's regulations provide that certain NRC and DOE contractors or subcontractors are exempt from the State's requirements for licensing and registration of sources of radiation which such persons receive, possess, use, transfer, or acquire.

Reference: 32 ILL. ADM. CODE 310.30.

III. Staff conclusion

Section 274d of the Atomic Energy Act of 1954, as amended, states: The Commission shall enter into an agreement under subsection b of this section with any State if:

(1) The Governor of that State certifies that the State has a program for the control of radiation hazards adequate to protect the public health and safety with respect to the materials within the State covered by the proposed agreement, and that the State desires to assume regulatory responsibility for such materials; and

(2) The Commission finds that the State program is in accordance with the requirements of subsection o. and in all other respects compatible with the Commission's program for the regulation of such materials, and that the State program is adequate to protect the public health and safety with respect to the materials covered by the proposed amendment.

The staff has concluded that the State of Illinois meets the requirements of Section 274 of the Act. The State's statutes, regulations, personnel, licensing, inspection and administrative procedures are compatible with those of the Commission and adequate to protect the public health and safety with respect to the materials covered by the proposed agreement. Since the State is not seeking authority over uranium milling activities, subsection o. is not

applicable to the proposed Illinois agreement.

Dated at Bethesda, Maryland, this 24th day of December 1986.

For the U.S. Nuclear Regulatory Commission.

G. Wayne Kerr,

Director, Office of State Programs.

Appendix A—Proposed Agreement Between the United States Nuclear Regulatory Commission and the State of Illinois for Discontinuance of Certain Commission Regulatory Authority and Responsibility Within the State Pursuant To Section 274 of the Atomic Energy Act of 1954, as Amended

WHEREAS, the United States Nuclear Regulatory Commission (hereinafter referred to as the Commission) is authorized under Section 274 of the Atomic Energy Act of 1954, as amended (hereinafter referred to as the Act), to enter into agreements with the Governor of any State providing for discontinuance of the regulatory authority of the Commission within the State under Chapters 6, 7 and 8, and Section 161 of the Act with respect to byproduct materials as defined in Sections 11e.(1) and (2) of the Act, source materials and special nuclear materials in quantities not sufficient to form a critical mass; and,

WHEREAS, the Governor of the State of Illinois is authorized under Illinois Revised Statutes, 1985, ch. 111 ½, par. 216b and ch. 111 ½, par. 241–19 to enter into this Agreement with the Commission; and,

WHEREAS, the Governor of the State of Illinois certified on _____ that the State of Illinois (hereinafter referred to as the State) has a program for the control of radiation hazards adequate to protect the public health and safety with respect to the materials within the State covered by this Agreement, and that the State desires to assume regulatory responsibility for such materials; and,

WHEREAS, the Commission found on _____ that the program of the State for the regulation of the materials covered by this Agreement is compatible with the Commission's program for the regulation of such materials and is adequate to protect the public health and safety; and,

WHEREAS, the State and the Commission recognize the desirability and importance of cooperation between the Commission and the State in the formulation of standards for protection against hazards of radiation and in assuring that State and Commission programs for protection against hazards of radiation will be coordinated and compatible; and,

WHEREAS, the Commission and the State recognize the desirability of reciprocal recognition of licenses and exemptions from licensing of those materials subject to this Agreement; and,

WHEREAS, this Agreement is entered into pursuant to the provisions of the Atomic Energy Act of 1954, as amended;

NOW, THEREFORE, IT IS HEREBY AGREED between the Commission and the Governor of the State, acting in behalf of the State as follows:

Article I

Subject to the exceptions provided in Articles II, IV and V, the Commission shall discontinue, as of the effective date of this Agreement, the regulatory authority of the Commission in the State under Chapters 6, 7 and 8, and Section 161 of the Act with respect to the following:

A. Byproduct material as defined in section 11e.(1) of the Act;

B. Source materials;

C. Special nuclear materials in quantities not sufficient to form a critical mass; and,

D. The land disposal of source, byproduct and special nuclear material received from other persons.

Article II

This Agreement does not provide for discontinuance of any authority and the Commission shall retain authority and responsibility with respect to regulation of:

A. The construction and operation of any production or utilization facility;

B. The export from or import into the United States of byproduct, source or special nuclear material, or of any production or utilization facility;

C. The disposal into the ocean or sea of byproduct, source or special nuclear waste materials as defined in regulations or orders of the Commission;

D. The disposal of such other byproduct, source, or special nuclear material as the Commission from time to time determines by regulation or order should, because of the hazards or potential hazards thereof, not be so disposed of without a license from the Commission; and,

E. The extraction or concentration of source material from source material ore and the management and disposal of the resulting byproduct material.

Article III

This Agreement may be amended, upon application by the State and approval by the Commission, to include the additional area specified in Article II, paragraph E, whereby the State can exert regulatory control over the materials stated therein.

Article IV

Notwithstanding this Agreement, the Commission may from time to time by rule, regulation or order, require that the manufacturer, processor, or producer of any equipment, device, commodity, or other product containing source, byproduct or special nuclear material shall not transfer possession or control of such product except pursuant to a license or an exemption from licensing issued by the Commission.

Article V

This Agreement shall not affect the authority of the Commission under subsection 161 b. or i. of the Act to issue rules, regulations or orders to protect the common defense and security, to protect restricted data or to guard against the loss or diversion of special nuclear material.

Article VI

The Commission will use its best efforts to cooperate with the State and other Agreement States in the formulation of standards and regulatory programs of the State and the Commission for protection against hazards of radiation and to assure that State and Commission programs for protection against hazards of radiation will be coordinated and compatible. The State will use its best efforts to cooperate with the Commission and other Agreement States in the formulation of standards and regulatory programs of the State and the Commission for protection against hazards of radiation and to assure that the State's program will continue to be compatible with the program of the Commission for the regulation of like materials. The State and the Commission will use their best efforts to keep each other informed of proposed changes in their respective rules and regulations and licensing, inspection and enforcement policies and criteria and to obtain the comments and assistance of the other party thereon.

Article VII

The Commission and the State agree that it is desirable to provide reciprocal recognition of licenses for the materials listed in Article I licensed by the other party or by any Agreement State. Accordingly, the Commission and the State agree to use their best efforts to develop appropriate rules, regulations and procedures by which such reciprocity will be accorded.

Article VIII

The Commission, upon its own initiative after reasonable notice and opportunity for hearing to the State, or upon request of the Governor of the State, may terminate or suspend all or part of this Agreement and reassert the licensing and regulatory authority vested in it under the Act if the Commission finds that (1) such termination or suspension is required to protect the public health and safety, or (2) the State has not complied with one or more of the requirements of Section 274 of the Act. The Commission may also, pursuant to Section 274j of the Act, temporarily suspend all or part of this Agreement if, in the judgment of the Commission, an emergency situation exists requiring immediate action to protect public health and safety and the State has failed to take necessary steps. The Commission shall periodically review this Agreement and actions taken by the State under this Agreement to ensure compliance with Section 274 of the Act.

Article IX

This Agreement shall become effective on _____, and shall remain in effect unless and until such time as it is terminated pursuant to Article VIII.

Done at _____, in triplicate, this _____ day of _____.

For the United States Nuclear Regulatory Commission.

Chairman

For the State of Illinois.

Governor

[FR Doc. 86-29382 Filed 12-30-86; 8:45 am]

BILLING CODE 7590-01-M

RAILROAD RETIREMENT BOARD

Privacy Act of 1974; Proposed Changes to Systems of Records

AGENCY: Railroad Retirement Board.

ACTION: Notice of proposed changes to systems of records.

SUMMARY: The purpose of this document is to give notice of three different proposed routine uses for inclusion in four of the RRB's systems of records.

DATES: The new routine uses that are proposed shall be effective as proposed without further notice 30 calendar days from the date of this publication unless comments are received before this date which would result in a contrary determination.

ADDRESS: Send comments to Beatrice Ezerski, Secretary to the Board, Railroad Retirement Board, 844 Rush Street, Chicago, Illinois 60611.

FOR FURTHER INFORMATION CONTACT: LeRoy Blommaert, Privacy Act Officer, Railroad Retirement Board, 844 Rush Street, Chicago, IL 60611, (312) 751-4548 [FTS 387-4548].

SUPPLEMENTARY INFORMATION:

Part I: Proposed Routine Uses—General

One routine use proposed for inclusion in three systems of records (RRB-1, "t," RRB-21, "cc," and RRB-22 "kk") would permit the disclosure of entitlement data and benefit rates to any court, state agency or interested party, or to the representative of such court, state agency, or interested party, in connection with contemplated or actual legal or administrative proceedings concerning domestic relations and support matters. Presently, such information is routinely disclosed upon request pursuant to the Freedom of Information Act. Establishing a routine use for such disclosures and publishing same in the **Federal Register** is in the public interest in that such publication gives notice to the public of these routine disclosures. Currently, certain portions of an employee's annuity may be subject to garnishment in connection with community property distributions, divorce court decrees, and court-approved property settlements incident to such decrees as well as in connection with child support or alimony obligations. The Railroad Retirement Board has determined that this proposed routine use meets the compatibility requirement because it is a necessary and proper use.

The second routine use proposed for inclusion in one system of records (RRB-22, "11") would permit the disclosure of identifying information about annuitants and applicants to agencies and/or companies from which such annuitants and applicants are receiving or may receive worker's compensation, public pension, or public disability benefits in order to verify the amount by which Railroad Retirement benefits must be reduced, where applicable. The Railroad Retirement Board has determined that this proposed routine use meets the compatibility requirement because it is a necessary and proper use.

The third routine use proposed for inclusion in two systems of records (RRB-22, "mm", RRB-26, "d") would permit the disclosure of disability annuitant identifying information to state employment agencies for the purpose of determining whether such annuitants were employed during times they received disability benefits. The disclosure would be in conjunction with a computer matching program. The Railroad Retirement Board has determined that this proposed routine use meets the compatibility requirement because it is a necessary and proper use. Under the Railroad Retirement Act, disability annuitants are restricted in the amount that they may earn and still receive a full annuity. Additionally, for annuitants determined to be totally and permanently disabled for all regular work, the type of work in which the annuitant is engaged is a factor in determining whether the annuitant can continue to qualify to receive a disability annuity. To properly administer the Railroad Retirement Act and to ensure that those receiving benefits are lawfully entitled to them, the Railroad Retirement Board needs accurate and timely information on the earnings, if any, that disability annuitants receive.

Part II: Proposed Matching Program

As was stated above, the third proposed routine use is intended to allow for disclosures pursuant to a computer matching program. The RRB's Office of Inspector General has proposed that the RRB enter into an arrangement with the State of Pennsylvania under which the RRB would furnish that state a tape of SSN's of RRB disability annuitants residing in Pennsylvania. That state would match such a tape against its computerized records of wages earned in Pennsylvania.

If the match operation revealed that wages had been reported for the individual during the requested period, the state would notify the RRB of this fact and furnish the name and address of each employer who reported earnings for the individual. The RRB would then either write each such employer to verify the reported wages for the given period or contact the subject individual about the state report. Only if the employment were verified would the RRB take action to recover any erroneous payment of disability benefits that might have resulted from the employment.

If the first match with the State of Pennsylvania proves to be cost effective, it is expected that the RRB will seek to enter into arrangements with other states for the performance of computer matching programs along the same lines.

Important limitations to the RRB's supplying data to the states are that the states must (1) agree to follow the requirements of the OMB's "Guidelines

for Conducting Computerized Matching Programs"; (2) not retain the data the RRB furnished beyond 6 months with the tapes either being destroyed by the states or returned to the RRB; (3) not utilize the information for matching purposes other than those specifically agreed upon; (4) not use the file to extract information concerning "non-matching" individuals for any purpose: and (5) neither duplicate the RRB's file nor derivatively use the file or information contained therein without the RRB's specific permission.

Under the arrangement, the RRB would serve as the "source" agency and the states the "matching agency" as those terms are defined in the revised OMB Guidelines on the Conduct of Computer Matching Programs (47 FR 21656; May 19, 1982.)

This extended public notice of the planned matching program is given here because under the revised guidelines, matching program reports are not required to be published in the **Federal Register** when a federal agency is not the matching agency even though the matching program is being done at the request of the Federal agency and for its benefit.

The planned matching program will utilize the existing matching program mechanism with those states that have entered into agreement with the RRB under which the RRB furnishes them identifying information on the recipients or railroad unemployment or sickness insurance benefits and the states match against their records of unemployment and/or sickness benefits paid and their records of wages reported. This matching program was described at 48 FR 28378–79 (June 21, 1983).

Part III: Previous Federal Register Publications

RRB–1, Social Security Benefit Vouchering System, was last published in its entirety on August 12, 1981, at 46 FR 40842–43; RRB–21, Railroad Unemployment and Sickness Insurance Benefit System, was last published in its entirety on March 13, 1980, at 45 FR 16375–76; RRB–22, Railroad Retirement, Survivor, and Pensioner Benefit System was last published in its entirety on August 12, 1981, at 46 FR 40843–44; and RRB–26, Research Master Record for Retired Railroad Employees and their Dependents, was last published in its entirety on September 20, 1977, at 42 FR 47469–88.

Part IV: New or Altered System Report

The Proposed action is not within the purview of the provisions of 5 U.S.C. 552(o) which require the submission of a new or altered system report.

Dated: December 29, 1986.

By authority of the Board.

Beatrice Ezerski,

Secretary of the Board.

RRB–1

SYSTEM NAME:

Social Security Benefit Vouchering System—RRB

* * * * *

ROUTINE USES OF RECORDS MAINTAINED IN THE SYSTEM, INCLUDING CATEGORIES OF USERS AND THE PURPOSES OF SUCH USES:

* * * * *

Paragraph "t" is added to read as follows:

t. Entitlement data and benefit rates may be released to any court, state agency, or interested party, or to the representative of such court, state agency, or interested party, in connection with contemplated or actual legal or administrative proceedings concerning domestic relations and support matters.

* * * * *

RRB–21

SYSTEM NAME:

Railroad Unemployment and Sickness Insurance Benefit System—RRB

* * * * *

ROUTINE USE OF RECORDS MAINTAINED IN THE SYSTEM, INCLUDING CATEGORIES OF USERS AND THE PURPOSES OF SUCH USES:

* * * * *

Paragraph "cc" is added to read as follows:

cc. Entitlement data and benefit rates may be released to any court, state agency, or interested party, or to the representative of such court, state agency, or interested party, in connection with contemplated or actual legal or administrative proceedings concerning domestic relations and support matters.

* * * * *

RRB–22

SYSTEM NAME:

Railroad Retirement, Survivor and Pensioner Benefit System—RRB

* * * * *

ROUTINE USES OF RECORDS MAINTAINED IN THE SYSTEM, INCLUDING CATEGORIES OF USERS AND THE PURPOSES OF SUCH USES:

* * * * *

Paragraphs "kk," "ll," and "mm" are added to read as follows:

kk. Entitlement data and benefits rates may be released to any court, state agency, or interested party, or to the representative of such court, state agency, or interested party, in connection with contemplated or actual legal or administrative proceedings concerning domestic relations and support matters.

ll. Identifying information about annuitants and applicants may be furnished to agencies and/or companies from which such annuitants and applicants are receiving or may receive worker's compensation, public pension, or public disability benefits in order to verify the amount by which Railroad Retirement Act benefits must be reduced, where applicable.

mm. Disability annuitant identifying information may be furnished to state employment agencies for the purpose of determining whether such annuitants were employed during times they receive disability benefits.

* * * * *

RRB–26

SYSTEM NAME:

Research Master Record for Retired Railroad Employees and Their Families—RRB

* * * * *

Paragraph "d" is added to read as follows:

d. Disability annuitant identifying information may be furnished to state employment agencies for the purpose of determining whether such annuitants were employed during times they receive disability benefits.

* * * * *

[FR Doc. 87–214 Filed 1–6–87; 8:45 am]

BILLING CODE 7905–01–M

SECURITIES AND EXCHANGE COMMISSION

[Release No. 34–23945; File Nos. SR–CBOE–86–36; SR–Phlx–86–38]

Self-Regulatory Organizations; Chicago Board Options Exchange, Inc.; Philadelphia Stock Exchange, Inc.; Order Approving Proposed Rule Change

Pursuant to section 19(b)(1) under the Securities Exchange Act of 1934 ("Act") [1] and rule 19b–4 thereunder,[2] the Philadelphia Stock Exchange, Inc. ("Phlx") and the Chicago Board Options Exchange, Inc. ("CBOE") submitted to the Securities and Exchange Commission ("Commission") proposed rule changes to allow Australian dollar options trading.

Notice of the proposed rule changes was given by the issuance of Securities

[1] 15 U.S.C. 78s(b)(1) (1984).

[2] 17 CFR 240.19b–4 (1986).

Exchange Act Release Nos. 23809 (November 14, 1986), 51 FR 42317 (November 24, 1986) (File No. SR-CBOE-86-36) and 23810 (November 14, 1986), 51 FR 42318 (November 24, 1986) (File No. SR-Phlx-86-38).

The proposed rule changes will allow the CBOE and Phlx to begin trading options on the Australian dollar. Australian dollar option contracts will be traded in the same manner and will be subject to the same rules as foreign currency option contracts currently traded on the CBOE and Phlx.[3]

Australian dollar option trading will provide investors with a valuable hedging vehicle. As was noted in the Phlx filing,[4] the Australian dollar currently accounts for a major portion of interbank foreign exchange trading.

The Commission finds that the proposed rule changes are consistent with the requirements of the Act and the rules and regulations thereunder applicable to a national securities exchange, and, in particular, the requirements of section 6 [5] and the rules and regulations thereunder.

It is therefore ordered, pursuant to section 19(b)(2) of the Act,[6] that the proposed rule changes are approved.

For the Commission, by the Division of Market Regulation, pursuant to delegated authority.

Dated: December 30, 1986.

Jonathan G. Katz,

Secretary.

[FR Doc. 87-296 Filed 1-6-87; 8:45 am]

BILLING CODE 8010-01-M

(Release No. 34-23926; File No. SR-NASD-86-31)

Self-Regulatory Organizations; National Association of Securities Dealers, Inc.; Order Approving Proposed Rule Change

On October 17, 1986, the National Association of Securities Dealers, Inc. ("NASD"), submitted to the Securities and Exchange Commission ("Commission"), pursuant to section 19(b)(1) under the Securities Exchange Act of 1934 ("Act") and Rule 19b-4 thereunder, a proposed rule change to clarify that the definition of "options contract" found in section 2(e) of Appendix E of the NASD's Rules of Fair Practice ("Rules") is identical to the definition of "option" in Article III, section 33(d) of the Rules. The rule change does not alter, amend, or otherwise modify the substance of section 2(e), but simplifies the wording to enhance its clarity.

The proposed rule change was noticed in Securities Exchange Act Release No. 23820 (November 17, 1986), 51 FR 42959 (November 26, 1986). No comments were received on the proposed rule change.

The Commission finds that the proposed rule change is consistent with the requirements of the Act and the rules and regulations thereunder appliable to a national securities exchange, in particular, the requirements of Section 6, and the rules and regulations thereunder.

It is therefore ordered, pursuant to section 19(b)(2) of the Act, that the proposed rule change is approved.

For the Commission, by the Division of Market Regulation, pursuant to delegated authority.

Jonathan G. Katz,

Secretary.

[FR Doc. 87-297 Filed 1-6-87; 8:45 am]

BILLING CODE 8010-01

[Release No. 34-23948; File No. SR-PCC-86-08]

Self-Regulatory Organizations; Filing and Immediate Effectiveness of Proposed Rule Change by Pacific Clearing Corporation Amending Its Non-Exchange Clearing Participant's Application and Agreement

Pursuant to section 19(b)(1) of the Securities Exchange Act of 1934 (the "Act"), 15 U.S.C. 78s(b)(1), notice is hereby given that on December 4, 1986 Pacific Clearing Corporation ("PCC") filed with the Commission the proposed rule change described below. The Commission is publishing this notice to solicit comments on the proposed rule change.

PCC's proposed rule change amends its currently-used Non-Exchange Clearing Participant's Application and Agreement ("NECPAA") which was initially implemented for use in 1975. The Rules of PCC were then incorporated into the rules of the Pacific Stock Exchange ("PSE"). Non-PSE members who required PCC services were exempted from executing any agreement with PCC as they were governed by the PSE/PCC Rules. In 1980, the PCC Rules were deleted from the PSE Rules and appended to the PCC By-laws and Rules. Since 1980, however, no action has been taken to update the NECPAA as a result of the amendments made to PCC's By-laws, Rules, and Procedures. PCC states that the proposed rule change takes into consideration all the amendments made.

Furthermore, PCC states that the proposed rule change is consistent with section 17A(b)(3)(F) of the Securities Exchange Act of 1934 (the "Act") in that it promotes the prompt and accurate clearance and settlement of securities transactions and is not designed to permit unfair discrimination in the admission of participants or among participants in the use of the clearing agency.

The foregoing rule change has become effective pursuant to section 19(b)(3)(A) of the Act and subparagraph (e) of the Securities Exchange Act Rule 19b-4. At any time within 60 days of the filing of the proposed rule change, the Commission may summarily abrogate the change if it appears to the Commission that it is necessary or appropriate in the public interest, for the protection of investors, or otherwise in furtherance of the purposes of the Act.

Interested persons are invited to submit written data, views and arguments concerning the proposal. Persons making written submissions should file six copies with the Secretary, Securities and Exchange Commission, 450 Fifth St., NW., Washington, DC 20549. Copies of the filing, all subsequent amendments, all written communications relating to the proposed rule change between the Commission and any person other than those which may be withheld from the public in accordance with the provisions of 5 U.S.C. 552, will be available for inspection and copying at the Commission's Public Reference Section, 450 Fifth St., NW., Washington, DC 20549. Copies of the filing will also be available for inspection and copying at the principal office of PCC. All submissions should refer to File No. SR-PCC-86-08 and should be submitted by January 28, 1987.

For the Commission, by the Division of Market Regulation, pursuant to delegated authority.

Dated: December 31, 1986.

Jonathan G. Katz,

Secretary.

[FR Doc. 87-298 Filed 1-6-87; 8:45 am]

BILLING CODE 8010-01-M

---

[3] Australian dollar option contracts will be subject to the 4% margin requirement currently applied to all other foreign currency options. According to a CBOE study, a 4% margin will provide a 97% confidence level of coverage for a five day period (while providing for a 94.3% confidence level for a seven day period). *See* letter from Margaret E. Wiermanski, Supervisor, Department of Financial Compliance, CBOE, to David L. Underhill, Staff Attorney, Division of Market Regulation, SEC, dated December 1, 1986. These figures were confirmed in a December 8, 1986 telephone conversion between David L. Underhill, Staff Attorney, Division of Market Regulation, SEC, and Diane Anderson, Supervisor, Examination Department, Phlx.

[4] 51 FR at 42320.

[5] 15 U.S.C. 78f (1984).

[6] 15 U.S.C. 78s(b)(2) (1984).

[Release No. 34-23947; File No. SR-PSDTC-86-13]

Self-Regulatory Organizations Filing and Immediate Effectiveness of Proposed Rule Change by Pacific Securities Depository Trust Co. Amending Its Participant's Agreement

Pursuant to Section 19(b)(1) of the Securities Exchange Act of 1934 (the "Act"), 15 U.S.C. 78s(b)(1), notice is hereby given that on December 4, 1986 Pacific Securities Depository Trust Company ("PSDTC") filed with the Commission the proposed rule change described below. The Commission is publishing this notice to solicit comments on the proposed rule change.

PSDTC's proposed rule change amends its current Participant's Agreement which has been in use since 1975 and has never been updated to reflect changes made to its By-laws, Rules, and Procedures. PSDTC states that it currently uses two separate agreements—the PSDTC Participant's Agreement for broker/dealer applicants and the PSDTC Bank Participant's Agreement for bank applicants. The proposed rule change combines the two separate agreements into one.

Furthermore, PSDTC states that the proposed rule change is consistent with section 17A(b)(3)(F) of the Securities Exchange Act of 1934 (the "Act") in that it promotes the prompt and accurate clearance and settlements of securities transactions and is not designed to permit unfair discrimination in the admission of participants or among participants in the use of the clearing agency.

The foregoing rule has become effective pursuant to section 19(b)(3)(A) of the Act and subparagraph (e) of the Securities Exchange Act Rule 19b-4. At any time within 60 days of the filing of the proposed rule change, the Commission may summarily abrogate the change if it appears to the Commission that it is necessary or appropriate in the public interest, for the protection of investors, or otherwise in furtherance of the purposes of the Act.

Interested persons are invited to submit written data, views and arguments concerning the proposal. Persons making written submissions should file six copies with the Secretary, Securities and Exchange Commission, 450 Fifth St., NW., Washington, DC 20549. Copies of the filing, all subsequent amendments, all written communications relating to the proposed rule change between the Commission and any person other than those which may be withheld from the public in accordance with the provisions of 5 U.S.C. 552, will be available for inspection and copying at the Commission Public Reference Section, 450 Fifth St., NW., Washington, DC 20549. Copies of the filing will also be available for inspection and copying at the principal office of PSDTC. All submissions should refer to File No. SR-PSDTC-86-13 and should be submitted by January 28, 1987.

For the Commission, by the Division of Market Regulation, pursuant to delegated authority.

Dated: December 31, 1986.

Jonathan G. Katz,

Secretary.

[FR Doc. 87-299 Filed 1-6-87, 8:45 am]

BILLING CODE 8010-01-M

[Release No. 23946; File No. SR-PSDTC-86-07]

Self-Regulatory Organizations; Pacific Securities Depository Trust Co.; Order Approving Proposed Rule Change

The Pacific Securities Depository Trust Company ("PSDTC"), on September 9, 1986, filed a proposed rule change (File No. SR-PSDTC-86-07) under section 19(b)(1) of the Securities Exchange Act of 1934 (the "Act") concerning PSDTC's National Institutional Delivery System ("NIDS"). The proposal will require institutional trades to be affirmed by three business days after trade date ("T+3") to qualify for automated settlement on settlement day (five business days after trade date or "T+5"). The Commission published notice of the proposal in the **Federal Register** on October 30, 1986, to solicit public comment.[1] No public comment was received. This Order approves the proposal.

I. Description

The proposal will require institutions or their agents using NIDS services to affirm, by T+3, customer-side contractual delivery and payment obligations arising from regular-way trades [2] in order to qualify the trades for automated settlement on T+5. The affirm is issued by the institution or its agent to the custodian bank holding the institution's securities to authorize settlement of an institutional trade after the broker confirms the terms of the trade in writing. Previously, PSDTC participants could use PSDTC's automated NIDS settlement if delivery and payment obligations were affirmed as late as T+4. Under the proposal, trades not affirmed by T+3 must be settled through other methods (*i.e.*, automated book-entry delivery instruction or physical delivery.)

II. PSDTC's Rationale

PSDTC states that the proposal will promote the objective of prompt and accurate clearance and settlement of securities transactions under section 17A of the Act. PSDTC states that when a trade is affirmed in error on T+4, the settling parties discover the error only after the trade has gone to automated settlement on T+5. Resolving such erroneous trades is time-consuming. In addition, a broker may not become aware of the affirmation until T+5 if the institution or its agent affirms on T+4. The broker, therefore, may have to segregate customer securities positions needlessly because of uncertainty whether the trade will be affirmed in time for automated settlement. PSDTC states that requiring trades to be affirmed by T+3 will alleviate these problems.

III. Discussion

The Commission believes the proposed rule change is consistent with section 17A of the Act because the proposal will promote prompt and accurate clearance and settlement of securities transactions. Accordingly, the Commission is approving PSDTC's proposal. First, the proposal will make standard among the four depositories (Depository Trust Company, Midwest Securities Trust Company, Philadelphia Depository Trust Company and PSDTC) the T+3 affirmation date. This should eliminate some confusion among broker-dealers and banks that deal with participants in more than one depository.

Second, the Commission believes that refinements in PSDTC's procedures and technological improvements in the securities industry have made the cost of automated settlement of T+4 affirmed trades greater than the cost of "exception" book-entry settlement of those trades. Confirmation reports of the trade are set out on T+1. The institution or its agent, therefore, has two business days to affirm in order to enjoy the benefits of automated settlement. Affirmation of trades on T+4, however, will not delay settlement of those trades. Settlement of trades that are affirmed on T+4 can occur on T+5 if the participant due to delivery securities on T+5 (the institution, its agent bank or its broker-dealer) issues appropriate delivery instructions to PSDTC on T+4 or T+5.

---

[1] Securities Exchange Act Release No. 23742 (October 22, 1986), 51 FR 39725.

[2] Regular-way trades are purchases or sales of securities that settle on the fifth business day after the day the trades are executed.

IV. Conclusion

On the basis of the foregoing, the Commission finds the proposed rule change (File No. SR-PSDTC-86-07) consistent with the Act and, more specifically, with section 17A of the Act.

Accordingly, It Is Therefore Ordered, pursuant to section 19(b)(2) of the Act, that the proposed rule change (File No. SR-PSDTC-86-07) be, and it hereby is approved.

For the Commission, by the Division of Market Regulation pursuant to delegated authority.

Dated: December 30, 1986.

Jonathan G. Katz,

Secretary.

[FR Doc. 87-300 Filed 1-6-87; 8:45 am]

BILLING CODE 8010-01

[Release No. 34-23944 File No. SR-PSE-86-31]

Self-Regulatory Organizations; Filing and Order Granting Accelerated Approval to Proposed Rule Change by the Pacific Stock Exchange, Inc., Relating to the Extension of Its Pilot Program for the Appointment and Evaluation of Specialists

Pursuant to section 19(b) of the Securities Exchange Act of 1934, ("Act") 15 U.S.C. 78s(b)(1), notice is hereby given that on December 9, 1986, the Pacific Stock Exchange, Incorporated ("PSE") filed with the Securities and Exchange Commission ("Commission") the proposed rule change as described in Items I, II, and III below, which Items have been prepared by the self-regulatory organization. The Commission is publishing this notice to solicit comments of the proposed rule change from interested persons.

I. Self-Regulatory Organization's Statement of the Terms of Substance of the Proposed Rule Change

The PSE filed its Pilot Program for the Appointment and Evaluation of Specialists and the Creation of New Specialist Posts ("Pilot Program") with the Commission on May 4, 1981. The Pilot Program was amended in 1982 and 1985 when the criteria for the evaluation of specialist performance was modified. The Pilot Program is currently scheduled to terminate on December 31, 1986. To permit the PSE to properly evaluate the latest revision in the specialist evaluation criteria that were approved by the Commission in February, 1986[1] the Board of Governors of the PSE has voted to request that the Pilot Program be extended through the first and second quarters of 1987, until June 30, 1987, so as to allow for a proper evaluation of these changes in the Specialist Evaluation System. The rule change also proposes conforming amendments that would continue the due process and appellate rights of specialists and applicant specialists throughout the extended Pilot Program.

II. Self-Regulatory Organization's Statement of the Purpose of, and Statutory Basis for, the Proposed Rule Change

In its filing with the Commission, the self-regulatory organization included statements concerning the purpose of and basis for the proposed rule change and discussed any comments it received on the proposed rule change. The text of these statements may be examined at the places specified in Item IV below. The self-regulatory organization has prepared summaries, set forth in sections (A), (B) and (C) below, of the most significant aspects of such statements.

(A) Self-Regulatory Organization's Statement of the Purpose of, and Statutory Basis for, the Proposed Rule Change

The Pilot Program was initially filed with the Commission May 4, 1981, and approved for a period of one year on May 27, 1981. The term of the Pilot Program was subsequently extended several times by the Commission. In 1982, and 1985, the Pilot Program was amended. It is currently scheduled to terminate on December 31, 1986.

In 1985, the PSE submitted to the Commission certain modifications to the criteria utilized in the Specialist Evaluation Criteria. These changes were approved by the Commission in February, 1986, [2] and were instituted in the second quarter of 1986. The PSE now wishes to extend the term of the Pilot Program through the first and second quarters of 1987, until June 30, 1987 in order to continue to evaluate the adjustments in the Specialist Evaluation System.

The PSE believes that the proposed rule change is consistent with section 6(b) of the Act in general, and in particular, section 6(b)(5).

(B) Self-Regulatory Organization's Statement on Burden on Competition

The proposed rule change imposes no burden on competition.

(C) Self-Regulatory Organization's Statement on Comments on the Proposed Rule Change Received from Members, Participants or Others

Comments on the proposed rule change were neither solicited nor received by the Exchange.

III. Date of Effectiveness of the Proposed Rule Change and Timing for Commission Action

To permit the Pilot Program to remain in effect without interruption, the PSE has requested that this filing be approved on an accelerated basis effective January 1, 1987.

The Commission finds that the proposed rule change is consistent with the requirements of the Act and the rules and regulations thereunder applicable to a national securities exchange and, in particular, the requirements of section 6, and the rules and regulations thereunder.

The Commission finds good cause for approving the proposed rule change prior to the thirtieth day after the date of publication of notice of filing thereof, in that it will provide the Exchange with the additional time necessary to complete its review of proposed amendments to the Pilot Program and to submit appropriate filings to the Commission, while permitting the Pilot Program to remain in effect without interruption.

IV. Solicitation of Comments

Interested persons are invited to submit written data, views and arguments concerning the foregoing. Persons making written submissions should file six copies thereof with the Secretary, Securities and Exchange Commission, 450 Fifth Street, NW., Washington, DC 20549. Copies of the submission, all subsequent amendments, all written statements with respect to the proposed rule change that are filed with the Commission, and all written communications relating to the proposed rule change between the Commission and any person, other than those that may be withheld from the public in accordance with the provisions of 5 U.S.C. 552, will be available for inspection and copying in the Commission's Public Reference Section, 450 Fifth Street, NW., Washington, DC 20549. Copies of such filing will also be available for inspection and copying at the principal office of the PSE. All submissions should refer to the file number of the caption above should be submitted by January 28, 1987.

It is therefore, ordered, pursuant to section 19(b)(2) of the Act, that the

---

[1] See, Securities Exchange Act Release No. 22895 (February 12, 1986) 51 FR 6190.

[2] *See*, note 1, *supra*.

proposed rule change referred above be, and hereby is, approved.

For the Commission, by the Division of Market Regulation pursuant to delegated authority.[3]

Dated: December 30, 1986.

Jonathan G. Katz,

Secretary.

[FR Doc. 87-301 Filed 1-6-87; 8:45 am]

BILLING CODE 8010-01

[Release No. 34-23942; File No. SR-Philadep-86-04]

Self-Regulatory Orgranizations; Philadelphia Depository Trust Co.; Order Approving Proposed Rule Change Governing the Distribution of Unclaimed Dividends and Other Distributions

The Philadelphia Depository Trust Company ("Philadep"), on September 4, 1986, filed a proposed rule change (File No. SR-PHILADEP-86-04) under section 19(b) of the Securities Exchange Act of 1934 ("Act") concerning dividend and interest claims and disposition of unclaimed dividend and interest payments. The Commission published notice of the proposal in the **Federal Register** on October 17, 1986, to solicit public comment.[1] No comments were received. This Order approves the proposal.

I. Description

Philadep's proposal amends its rules to provide a general and a specific rule pertaining to unclaimed dividends and interest distribution funds. First, the proposal amends Philadep Rule 2 to provide generally that Participants waive all claims for cash dividend and interest distributions that have not been claimed for five years from the date of the dividend or distribution except as otherwise provided in Philadep's By-Laws and Rules. The Rule also authorizes access by Philadep to the amount of any such dividend or distribution.

Second, proposed new Philadep Rule 29 contains specific procedures for Particpants to make a claim on unclaimed dividends and distributions in Philadep's possession. The Rule provides that Philadep will recognize a claim submitted by a Participant for unclaimed dividends or distributions for a period of up to five years after the date of such dividend or distribution. A Participant may make a claim by filing a written application with Philadep for the return of the claimed amount. The application must include evidence of Participant's claim, indemnification to Philadep against competing future claims, expenses arising from the return of the amount to the Participant and other terms and conditions as Philadep may prescribe.[2]

Proposed new Philadep Rule 29 also provides that Participants shall be deemed to waive all claims for dividend and interest distributions funds that have not been claimed for five years, including those funds that have gone unclaimed for five years prior to the adoption of this Rule. In addition, Philadep is authorized to use these funds in various areas of its operations for the benefit of all its Participants. More specifically, Philadep intends to use these funds to cover the cost of replacing lost securities and deficits in the distributions accounts, and to reduce the magnitude and frequency of participant fee increases, among other things. Before using funds that already have gone unclaimed for five years prior to the effective date of this Rule, Philadep will notify all Participants, past or present, of the rule change and allow a reasonable time during which Participants may check their records for a missed dividend or distribution and file a claim.

II. Philadep's Rationale

Philadep states that the rule change is consistent with section 17A(b)(3)(F) of the Act in that it improves the operation of the depository and promotes the prompt and accurate clearance and settlement of securities transactions. Philadep believes the proposal provides fair procedures through which Participants can recover unclaimed dividends and distributions for up to five years and provides Philadep authority to use the funds if they are unclaimed after five years.

III. Discussion

The Commission believes that Philadep's proposal is consistent with section 17A of the Act in that it promotes the prompt and accurate clearance and settlement of securities transactions while ensuring the safeguarding of funds and securities in Philadep's custody and control. For the reasons discussed below, the Commission is approving Philadep's proposal.

The proposal establishes an orderly and efficient procedure for Participants to make claims against Philadep for unpaid dividends, interest and other cash distributions. By requiring a Participant to substantiate its claim, the proposal appears to be well designed to enable prompt resolution of outstanding claims. Moreover, by requiring indemnification from competing claims and expenses, the proposal also protects Philadep against erroneous payment on Participant claims.

The Commission believes that the proposed mechanism authorizing Philadep's use of unclaimed dividends, interest and other cash distributions is consistent with Philadep's obligation to safeguard Participant funds and securities. Among other things, the controls surrounding Philadep's dividend and interest distribution systems are designed to minimize, if not eliminate, the potential for unclaimed property. First, as a part of its system of internal accounting control, Philadep reconciles its position records with transfer agents and paying agents (from whom it receives cash distributions) as well as Philadep participants (to whom it remits cash distributions). Philadep's reconciliation procedures are subject to internal and external reviews, studies and audits.[3] Second, Philadep's participants have an independent obligation to balance and reconcile their accounts on a daily and monthly basis [4] and to make timely notice to Philadep in the event that they discover a missed dividend or distribution. Thus, unclaimed dividends, interest and other cash distributions that remain unpaid for five years should not be substantial.[5]

The Commission believes that the proposal affords Participants adequate As described above, Participants would have up to five years from the issuer's payment date to claim against Philadep for unpaid distributions. Philadep has agreed to notify all past and present participants of the intention to use funds that have gone unclaimed for five years prior to the adoption of the rule changes

---

[3] 17 CFR 200.30 through 200.3.

[1] Securities Exchange Act Release No. 23697 (October 9, 1986), 51 FR 37106 (October 17, 1986).

[2] In addition to unclaimed dividends or distributions whose payment date is after the effective date of this proposal, the claim procedures also will be used for unclaimed dividends or distributions whose payment date has passed upon the effective date, but is less than five years old.

[3] As discussed in Securities Exchange Act Release No. 20221 ((September 23, 1983), 48 FR 45167 (October 3, 1983)), Philadep's internal accounting control system is reviewed and evaluated on an annual basis by an independent public accountant. The scope of the review includes Philadep's operations, reconciliation of Participants' accounts and internal auditing.

[4] *See* Stock Clearing Corporation of Philadelphia Rule 21. Under state and federal law, Philadep's participants, as banks and broker-dealers, have an obligation to reconcile their books and records on a regular basis.

[5] For example, Philadep estimates that it currently holds approximately $50,000 in cash distributions that have gone unclaimed for more than 5 years.

and will allow six weeks for the filing of claims. In addition, in order to provide Participants a final opportunity to submit claims, Philadep, on a quarterly basis, will remind all Participants, past and present, of the intention to use unclaimed distributions.

Philadep intends to use any funds which are not claimed within the five year period to cover costs of depository functions, such as the costs of replacing lost securities and deficits in distribution accounts not covered by insurance. The Commission understands that under state law a participant may waive its claims to a cash dividend or distribution.[6] The Commission believes that waiver of unclaimed dividend, interest and other cash distributions and Participant authorization of the use of those funds to benefit all depository participants is an appropriate way to dispose of such funds.

It is therefore ordered, pursuant to Section 19(b)(2) of the Act, that Philadep's rule change be, and it hereby is, approved.

For the Commission, by the Division of Market Regulation pursuant to delegated authority.

Dated: December 29, 1986.

Jonathan G. Katz,

Secretary.

[FR Doc. 87-302 Filed 1-6-87; 8:45 am]

BILLING CODE 8010-01-M

[Release No. 34-23939; File No. SR-Phlx-86-27]

Self-Regulatory Organizations; Order Approving Proposed Rule Change by the Philadelphia Stock Exchange, Inc. Relating to Prompt Payment of Dues, Fines, Users' Fees, and Other Charges

The Philadelphia Stock Exchange, Inc. ("Phlx") submitted, on August 25, 1986, copies of a proposed rule change pursuant to section 19(b)(1) of the Securities Exchange Act of 1934 ("Act") and Rule 19b-4 thereunder, to amend its By-Law Article XIV, section 14-5, and Rule 50 to facilitate prompt payment by members, foreign currency options participants, and their broker-dealer organizations of dues, users' fees, fines, and other charges imposed by the Exchange.[1] The proposal gives the Phlx Board of Governors the authority to suspend any member who has not paid, in full, any fine within twenty days, or any other payment, within ninety days, of its assessment. The proposed rule change is intended to encourage timely remittance of dues, fees, fines, and other charges, and to deter the practice among members of paying only that portion of their account that is past due or in a delinquent status.[2]

Notice of the proposed rule change, together with the terms of substance of the proposal, was given by the issuance of a Commission release (Securities Exchange Act Release No. 23826, November 19, 1986) and by publication in the **Federal Register** (51 FR 42962, November 26, 1986). No comments were received regarding the proposal.

The Commission finds that the proposed rule changes are consistent with the requirements of the Act and the rules and regulations thereunder applicable to a national securities exchange. In particular, the proposed changes are consistent with section 6(b)(4) of the Act, in that they provide for the equitable allocation of reasonable dues, fees and other charges among members of the Exchange.

It is therefore ordered, pursuant to section 19(b)(2) of the Act, that the proposed rule change be, and hereby is, approved.

For the Commission, by the Division of Market Regulation, pursuant to delegated authority.

Dated: December 31, 1986.

Jonathan G. Katz,

Secretary.

[FR Doc. 87-290 Filed 1-6-87; 8:45 am]

BILLING CODE 8010-01-M

[Release No. IC-15517; (File No. 812-6539)]

Atlantic Financing Corp.; Application for Exemption

December 31, 1986.

AGENCY: Securities and Exchange Commission ("SEC").

ACTION: Notice of application for exemption under the Investment Company Act of 1940 ("Act").

Applicant: Atlantic Financing Corporation.

Relevant Section of Act: Exemption requested, pursuant to Section 6(c) of the Act, from all provisions of the Act.

Summary of Application: Applicant seeks a conditional order exempting it from all provisions of the Act in connection with its proposed issuance of collateralized mortgage obligations.

Filing Date: November 21, 1986.

Hearing or Notification of Hearing: If no hearing is ordered, an order disposing of the application will be issued. Any interested person may request a hearing on this application, or ask to be notified if a hearing is ordered. Any requests must be received by the SEC by 5:30 p.m., on January 26, 1987. Requests must be in writing, setting forth the nature of your interest, the reasons for the request, and the issues contested. Applicant should be served with a copy of the request, either personally or by mail, and the request should also be sent to the Secretary of the SEC, along with proof of service (by affidavit or, in the case of an attorney-at-law, by certificate). Notification of the date of a hearing should be requested by writing to the Secretary of the SEC.

ADDRESS: Secretary, Securities and Exchange Commission, 450 5th Street, NW., Washington, DC 20549; Atlantic Financing Corporation, 1209 Orange Street, Wilmington, Delaware 19801.

FOR FURTHER INFORMATION CONTACT: George Martinez, Attorney (202) 272-3024, or H. R. Hallock, Jr., Special Counsel (202) 272-3030. Office of Investment Company Regulation.

SUPPLEMENTARY INFORMATION: The following is a summary of the application. The complete application is available for a fee from either the Commission's Public Reference Branch in person or the Commission's commercial copier (800) 231-3282 (in Maryland (801), 258-4300).

Applicant's Representations

Applicant is a wholly-owned limited purpose finance subsidiary of Atlantic Financial Federal, incorporated under Delaware law for the purpose of investing in certain certificates representing interests in mortgage pools to be purchased principally with the proceeds of bonds ("Bonds") collateralized by such certificates. Applicant does not intend to engage in any business or investment activities other than issuing and selling Bonds collateralized primarily by certificates under an indenture, acquiring, owning, holding and pledging certificates, investing cash balances on an interim basis in certain short-term investments

---

[6] The Commission notes that approval of this proposal is not meant to preempt state escheat laws. Philadep is of the view, however, that its rule change is consistent with Pennsylvania escheat laws and has obtained an opinion of counsel to that effect.

[1] The language of the proposed change to Rule 50 was amended by a letter from the Phlx to the Division of Market Regulation, which clarified the different grace periods between fines and other payments. *See* Letter from Murray L. Ross, Secretary, Phlx, to Stephen Luparello, Staff Attorney, Division of Market Regulation, SEC, dated October 29, 1986.

[2] The Phlx cited an increase in accounts receivable due from members, participants, and their broker-dealer organizations during the fourth quarter of 1985 and the first quarter of 1986 as the motivation for the proposed changes. *See* File No. SR-Phlx-86-27.

and engaging in activities incidental to and necessary for such purposes.

Applicant proposes to issue and sell the Bonds in series ("Series") issued pursuant to one or more indentures ("Indentures") between Applicant and a qualified unaffiliated trustee ("Trustee"). The Indenture for each Series of Bonds will be qualified under the Trust Indenture Act of 1939. Applicant will only issue Bonds rated in the highest investment grade rating by an unaffiliated nationally recognized statistical rating organization. Each Series of Bonds will be secured separately by assignments to the Trustee of any combination of mortgage-backed certificates guaranteed by the Government National Mortgage Corporation; mortgage participation certificates issued by the Federal Home Loan Mortgage Corporation; and guaranteed mortgage pass-through certificates issued by the Federal National Mortgage Association (collectively, Certificates). The collateral for each Series of Bonds will secure only that Series and each Series of Bonds will be fully payable from the principal and interest payments on the collateral pledged to secure such Series. Under the Indenture, at the time a Series of Bonds is issued, the bond value of the collateral securing such Series will be at least equal to the principal amount of the Bonds. The cash flow on the Certificates, including the reinvestment income thereon, will always be adequate to pay the principal and interest on the Bonds when due to bondholders.

Except in the case of an event of default under an Indenture, bondholders will not have the right either to request redemption or to compel liquidation of the collateral in order to redeem Bonds prior to maturity. The Bonds may be subject to special redemption at 100% of their unpaid principal amount plus accrued interest, if, as a result of substantial prepayments on the mortgage loans underlying the Certificates and/or low reinvestment yields, the Trustee under the Indenture for such Bonds determines that current interest requirements on the Bonds cannot be met. Any such redemption would be limited to a principal amount of Bonds that would otherwise be required to be paid on the next payment date.

Applicant submits that the relief requested is necessary and appropriate in the public interest because: (1) Applicant is not the type of entity to which the provisions of the Act were intended to be applied; (2) Applicant may be unable to proceed with its proposed business if the uncertainties concerning the applicability of the Act are not removed; (3) Applicant's proposed business is intended to serve a recognized and critical public need; and (4) the granting of the requested exemption will not be inconsistent with the protection of investors and the purposes fairly intended by the policy and provisions of the Act.

As conditions to the granting of the requested relief, Applicant expressly agrees to be subject to the following:

(1) Each Series of Bonds will be registered under the Securities Act of 1933 ("1933 Act"), unless offered in a transaction excempt from registration pursuant to section 4(2) of the 1933 Act.

(2) The Bonds will be "mortgage related securities" within the meaning of section 3(a)(41) of the Securiteis Exchange Act of 1934. The collateral underlying the Bonds will be limited to Certificates guaranteed by the Government National Mortgage Association, the Federal National Mortgage Association or the Federal Home Loan Mortgage Corporation.

(3) If new collateral is substituted, the substitute collateral must: (i) Be of equal or better quality than the collateral replaced; (ii) have similar payment terms and cash flow as the collateral replaced; (iii) be insured or guaranteed to the same extent as the collateral replaced; and (iv) meet the conditions set forth in paragraphs (2), (4) and (6). In addition, new collateral may not be substituted for more than 40% of the aggregate face amount of the Certificates initialy pledged as collateral. In no event may any new collateral be substituted for any substitute collateral.

(4) All Certificates, funds or accounts securing a Series of Bonds will be held by the Trustee or on behalf of the Trustee by an independent custodian. In the event of employment of a custodian, such custodian may not be an affiliate (as the term "affiliate" is defined in the 1933 Act Rule 405, 17 CFR 230.405) of the Applicant. The Trustee will be provided with a first priority perfected security or lien interest in and to all collateral.

(5) Each Series of Bonds will be rated in the highest bond rating category by at least one nationally recognized statistical rating organization that is not affiliated with the Applicant. The Bonds will not be considered redeemable securities within the meaning of section 2(a)(32) of the Act.

(6) No less often than annually, an independent public accountant will audit the books and records of the Applicant and, in addition, will report on whether the anticipated payments of principal and interest on the Bonds continue to be adequate to pay the principal and interest on the Bonds in accordance with their terms. Upon completion, copies of the accountant's report(s) will be provided to the Trustee.

For the Commission, by the Division of Investment Management, pursuant to delegated authority.

Jonathan G. Katz,

Secretary.

[FR Doc. 87-303 Filed 1-6-87; 8:45 am]

BILLING CODE 8010-01-M

[File No. 22-16249]

Application and Opportunity for Hearing; American Express Credit Corp.

December 30, 1986.

Notice is Hereby Given that American Express Credit Corporation (the "Applicant") has filed an application under clause (ii) of section 310(b)(1) of the Trust Indenture Act of 1939 (the "Act") for a finding that the trusteeship of J. Henry Shroder Bank & Trust Company ("Schroder") under two existing Indentures is not so likely to involve a material conflict of interest as to make it necessary in the public interest or for the protection of investors to disqualify Schroder from acting as Trustee under the Indentures.

Section 310(b) of the Act provides in part that if a trustee under an indenture qualified under the Act has or shall acquire any conflicting interest it shall, within ninety days after ascertaining the conflicting interest, either eliminate such conflicting interest or resign as trustee. Subsection (1) of section 310(b) provides, with certain exceptions, that a trustee under a qualified indenture shall be deemed to have a conflicting interest if such trustee is trustee upon another indenture under which other securities of an obligor upon the indenture securities are outstanding. However, under clause (ii) of subsection (1), there may be excluded from the operation of the subsection another indenture under which other securities of the same obligor are outstanding, if the issuer shall have sustained the burden of proving, on application to the Commission and after opportunity for hearing thereon, that trusteeship under both the qualified indenture and such other indenture is not so likely to involve a material conflict of as to make it necessary in the public interest or for the protection of investors to disqualify such trustee from acting as trustee under one of such indentures.

The Applicant alleges that: (1) Applicant has issued and outstanding, as of November 7, 1986, $75,000,000 principal amount of 11.25% Subordinated Debentures Due 2000 under an Indenture dated as of June 15, 1980. The original trustee is resigning and Applicant is duly appointing Schroder as successor trustee. Applicant and Schroder are also parties to an Indenture dated as of April 1, 1972 under which $12,000,000 principal amount of Applicant's 7.80%. Subordinated Debentures Due 1992 are outstanding.

(2) The Applicant is not in default in any respect under the Indentures.

(3) The obligations of Applicant under the Indentures are wholly unsecured and rank pari passu. Any differences that exist between the provisions of the Indentures are unlikely to cause any conflict of interest among the trusteeships of Schroder as to make it necessary in the public interest or for the protection of investors to disqualify Schroder from acting as trustee under either of the Indentures.

Applicant has waived notice of hearing, hearing, and any and all rights to specify procedures under Rule 8(b) of the Commission's Rules of Practice in connection with this matter.

For a more detailed statement of the matters of fact and law asserted, all persons are referred to said application, File No. 11-16249, which is a public document on file in the office of the Commission's Public Reference Room, 450 Fifth Street, NW., Washington, DC 20549.

Notice is Further Given that any interested person may, not later than January 26, 1987 request in writing that a hearing be held on such matter, stating the nature of his interest, the reasons for such request, and the issues of law or fact raised by said application which he desires to controvert or may request that he be notified if the Commission should order a hearing thereon.

Any such request should be addressed to: Secretary, Securities and Exchange Commission, Washington, DC 20549. At any time after said date, the Commission may issue an order granting the application upon such terms and conditions as the Commission may deem necessary or appropriate in the public interest and for the protection of investors, unless a hearing is ordered by the Commission.

By the Commission, by the Division of Corporation Finance, pursuant to delegated authority.

Jonathan Katz,

Secretary.

[FR Doc. 87-304 Filed 1-6-87; 8:45 am]

BILLING CODE 8010-01-M

[Rel. No. IC-15506; 812-6528]

American International Life Assurance Co. of New York, et al.

December 29, 1986.

AGENCY: Securities and Exchange Commission ("SEC").

ACTION: Notice of Application for Exemption under the Investment Company Act of 1940 (the "1940 Act").

Applicant(s): American International Life Assurance Company of New York (the "Company"); AIG Variable Account A (the "Separate Account"); American International Fund Distributors, Inc. ("Distributors").

Relevant 1940 Act Sections: Exemption requested *under* section 6(c) from sections 26(a) and 27(c)(2).

Summary of Application: Applicants seek an order to permit them to issue deferred annuity contracts (the "Contracts") which will permit a deduction of Mortality and Expense Risk Charges.

Filing Date: The Application was filed on November 7, 1986.

Hearing or Notification of Hearing: If no hearing is ordered, the application will be granted. Any interested person may request a hearing on this application, or ask to be notified if a hearing is ordered. Any requests must be received by the SEC by 5:30 p.m., on January 23, 1987. Request a hearing in writing, giving the nature of your interest, the reason for the request, and the issues you contest. Serve the Applicant(s) with the request, either personally or by mail, and also send it to the Secretary of the SEC, along with proof of service by affidavit, or for lawyers, by certificate. Request notification of the date of a hearing by writing to the Secretary of the SEC.

ADDRESSES: Secretary, SEC, 450 5th Street, NW., Washington, DC 20549. The Company, Separate Account and Distributors, 70 Pine Street, New York, New York 10270.

FOR FURTHER INFORMATION CONTACT: Staff Attorney Jeffrey M. Ulness (202) 272-3027 or Special Counsel Lewis B. Reich (202) 272-2061 (Office of Insurance Products and Legal Compliance) (Division of Investment Management).

SUPPLEMENTARY INFORMATION: Following is a summary of the application; the complete application is available for a fee from either the SEC's Public Reference Branch in person or the SEC's commercial copier (800) 231-3282 (in Maryland (301) 258-4300).

Applicant's Representations:

1. The Company is a stock life insurance company organized under the laws of the State of New York in 1962. The Company is a wholly-owned subsidiary of American International Group, Inc. The Company is engaged in the business of providing employee benefit programs including group life, medical assistance, loss of income, accidental death and dismemberment, retirement income and pension plans.

2. The Company established the Separate Account on June 5, 1986, pursuant to the provisions of New York Insurance law. The Separate Account is a segregated investment account of the Company and is registered with the SEC as a unit investment trust. The Separate Account was established to act as the funding entity for the Contracts to be issued by the Company.

3. The net purchase payments under the Contracts are allocated to the Separate Account. (Net purchase payments are the purchase payments less any premium tax). The Separate Account is divided into Sub-accounts, with the assets of each Sub-account invested in one Portfolio of American International Life Series Trust (the "Series Trust").

4. The Series Trust is a Massachusetts business trust registered under the Act as a diversified open-end management investment company which is deemed to be of the series type. It is currently comprised of three portfolios: Money Market Portfolio, Fixed Income Portfolio and Equity Portfolio. The Company may, from time to time, add additional Portfolios to the Series Trust and, when appropriate, additional mutual funds to act as the funding vehicles for the Contracts. AIG Investment Advisors, Inc., an affiliate of the Company, manages the Series Trust.

5. The Contracts are individual single purchase payment deferred variable annuity contracts which provide for accumulation of contract values on a variable basis and payment of monthly annuity payments on a fixed and/or variable basis. The Contracts are designed for use by individuals for retirement planning. The Contracts may or may not qualify for any special tax treatment afforded qualified plans under the Internal Revenue Code. The minimum purchase payment the Company will accept is $10,000.

6. The Company assumes mortality and expense risks under the Contracts. The mortality risks assumed by the Company arise from its contractual

obligations to make annuity payments after the Annuity Date for the life of the Annuitant, to waive the Deferred Sales Charge in the event of the death of the Annuitant and to provide the death benefit prior to the Annuity Date. The expense risk assumed by the Company is that the costs of administering the Contracts and the Separate Account will exceed the amount received from the Administrative Charge.

7. The Company will assess the Separate Account with a daily asset charge for mortality and expense risks which amounts to an aggregate, on an annual basis, of 1.25% of the average daily net asset value of the Separate Account (consisting of approximately .90% for mortality risks and approximately .35% for expense risks). This charge is guaranteed by the Company and cannot be increased. If the Mortality and Expense Risk Charge is insufficient to cover the actual costs, the loss will be borne by the Company. Conversely, if the amount deducted proves more than sufficient, the excess will be profit to the Company. The Company expects a profit from this charge. Applicants represent that the 1.25% total for these charges, which it currently proposes to charge, is reasonable in relation to the risks assumed and guarantees provided in the Contract. This representation is based upon an analysis of the mortality risks, taking into consideration such factors as any contractual right to increase charges above current levels, the guaranteed annuity purchase rates, the expense risks taking into account the existence of charges for other than mortality and expense risks and the estimated costs, now and in the future, for certain product features. The Company will maintain at its principal office, available to the Commission, a memorandum setting forth in detail this analysis.

8. In the event that a contractowner withdraws all or a portion of the contract value in excess of the Free Withdrawal Amount for the first withdrawal in a contract year, a Deferred Sales Charge may be imposed. The Free Withdrawal Amount is equal to ten percent (10%) of the contract value at the time of withdrawal. The Deferred Sales Charge will vary in amount depending upon when the Purchase Payment was made. The Deferred Sales Charge is calculated against the amount withdrawn. The amount of any withdrawal which exceeds the Free Withdrawal Amount will be subject to the following charge:

Contract year	Applicable deferred sales charge percentage (percent)
1	6
2	5
3	4
4	3
5	2
6	1
7 and thereafter	0

The Deferred Sales Charge will not exceed 9% of purchase payments. In the event that the contractowner selects an annuity date within six (6) years from the date of issue, the Company will assess a Deferred Sales Charge, on the annuity date, as if a withdrawal had taken place. The Deferred Sales Change is intended to reimburse the Company for expenses incurred which are related to Contract sales. Such expenses are sales commissions, promotional expenses associated with the marketing of the Contracts, including costs associated with the printing and distribution of the prospectus, the Contracts, sales materials and any other relevant information concerning the Contracts. To the extent the charge is insufficient to cover all distribution costs, the Company may use any of its corporate assets, including potential profit which may arise from the Mortality and Expense Risk Charge, to make up any differences. Applicants acknowledge that the Deferred Sales Charge may be insufficient to cover all costs relating to the distribution of the Contracts and that if a profit is realized from the Mortality and Expense Risk Charge, all or a portion of such profit may be offset by distribution expenses not reimbursed by the Deferred Sales Charge. In such circumstances a portion of the Mortality and Expense Risk Charge might be viewed as providing for a portion of the costs relating to distribution of the Contracts. Notwithstanding the foregoing, the Company has concluded that there is a reasonable likelihood that the proposed distribution financing arrangements made with respect to the Contracts will benefit the Separate Account and the contractowners. The basis for such conclusion is set forth in a memorandum which will be maintained by the Company at its principal office and will be available to the Commission. Moreover, the Company represents that the Separate Account will invest only in an underlying mutual fund which undertakes, in the event it should adopt any plan under Rule 12b-1 to finance distribution expenses, to have such plan formulated and approved by a board of directors, a majority of the members which are not "interested persons" of such fund within the meaning of Section 2(a)(19) of the Act.

9. The Company deducts an annual Administrative Charge, which is currently $30 per year, from the contract value to reimburse it for administrative expenses relating to maintenance of the Contract and the Separate Account. The Company may increase this charge to an amount not to exceed $100 per year. Prior to the annuity date, the Administrative Charge is deducted from the contract value on each contract anniversary. If the annuity date is a date other than a contract anniversary, the Company will also deduct a pro-rata portion of the Administrative Charge from the contract value for the fraction of the contract year preceding the annuity date. This charge is also deducted on the date of any total withdrawal. After the annuity date, this charge is deducted on a pro-rata basis from each annuity payment.

For the Commission, by the Division of Investment Management, under delegated authority.

Jonathan G. Katz,

Secretary.

[FR Doc. 87-305 Filed 1-6-87; 8:45 am]

BILLING CODE 8010-01-M

[Release No. IC-15498; File No. 812-6547]

Continental Illinois Holding Corp.

AGENCY: Securities and Exchange Commission ("SEC").

ACTION: Notice of application for an order under the Investment Company Act of 1940 (the "1940 Act").

Applicant: Continental Illinois Holding Corporation ("Holding").

Relevant 1940 Act Sections: Order requested under section 3(b)(2) or, alternatively, under section 6(c) granting exemption from all provisions of the 1940 Act and all rules and regulations thereunder.

Summary of Application: Applicant seeks an order declaring it not to be an investment company, or alternatively, granting it an exemption from all provisions of the Act and rules and regulations thereunder.

Filing Date: The application was filed on December 1, 1986.

Hearing or Notification of Hearing: If no hearing is ordered, the application will be granted. Any interested person may request a hearing on this application, or ask to be notified if a hearing is ordered. Any requests must be received by the SEC by 5:30 p.m., on January 16, 1987. Request a hearing in

writing, giving the nature of your interest, the reason for the request, and the issue you contest. Serve the Applicant with the request, either personally or by mail, and also send it to the Secretary of the SEC, along with proof of service by affidavit, or, for lawyers, by certificate. Request notification of the date of a hearing by writing to the Secretary of the SEC.

ADDRESSES: Secretary, SEC, 450 Fifth Street NW., Washington, DC 20549. Holding, c/o Kevin J. Hallagan, 231 South LaSalle Street, Chicago, IL 60697, with a copy to Milton H. Cohen and Keith Shay, Schiff Hardin & Waite, 7200 Sears Tower, Chicago, IL 60606.

FOR FURTHER INFORMATION CONTACT: Denis R. Molleur, Staff Attorney (202) 272-2363 or Brion R. Thompson, Special Counsel (202) 272-3016 (Division of Investment Management, Office of Investment Company Regulation).

SUPPLEMENTARY INFORMATION: Following is a summary of the application; the complete application is available for a fee from either the SEC's Public Reference Branch in person, or the SEC's commercial copier (800) 231-3282 (in Maryland (301) 258-4300).

Applicant's Representations

1. Holding was created in August, 1984, solely as a vehicle to implement an important feature of a restructuring plan (the "Restructuring Plan") providing for (a) emergency financial assistance from the Federal Deposit Insurance Corporation ("FDIC") to the Continental Illinois National Bank and Trust Company of Chicago (the "Bank") and (b) the related restructuring of the Bank's parent, Continental Illinois Corporation ("CI Corp"). Holding was formed for the temporary and limited purpose of enabling the former stockholders of CI Corp to realize any residual value on the shares formerly held by them if an option (the "Option," described below) granted to the FDIC to purchase such shares at a nominal cost is not exercised in full. Holding will not engage in any activities other than the ownership of CI Corp common stock, and Holding's only source of income will be dividends from CI Corp.

2. Under the Restructuring Plan, which was implemented on September 26, 1984, the following transactions were consummated:

a. Each of the shares of CI Corp common stock outstanding prior to the consummation of the Restructuring Plan was converted into one share of common stock of Holding, and Holding became the owner of all the shares of CI Corp common stock outstanding after consummation of the Restructuring Plan.

b. The FDIC assumed $3.5 billion of the Bank's outstanding indebtedness to the Federal Reserve Bank of Chicago ("FRB-Chicago") pursuant to an agreement with the FRB-Chicago (the "FDIC-FRB Agreement").

c. The Bank (1) transferred to the FDIC certain poor-quality loans having a written-down book value of approximately $1.955 billion and (2) delivered to the FDIC the Bank's note in the amount of $1.5 billion, which the Bank could repay by transferring to the FDIC, over a three-year period expiring September 26, 1987, up to $1.5 billion in book value (not written-down) of additional poor-quality loans.

d. Holding granted the FDIC the Option, which is designed to compensate the FDIC in the event it realizes losses on the loans transferred to it by the Bank (the "Transferred Loans") pursuant to the Restructuring Plan. Thus, if on or prior to the fifth anniversary of the implementation of the Restructuring Plan (i.e., September 26, 1989), cash collections on the Transferred Loans plus any cash payments by the Bank on its $1.5 billion note and any recoveries by the FDIC on certain litigation claims assigned to it have not been sufficient to pay the principal and interest owing under the FDIC-FRB Agreement, as well as certain expenses of collection and administration, an appraisal will be made of the fair market value of the Transferred Loans. If the appraised value of the Transferred Loans is less than the sum of (1) the amount then owing by the FDIC to the FRB-Chicago pursuant to the FDIC-FRB Agreement and (2) the amount of such expenses of collection and administration (such difference being referred to as the "shortfall"), the FDIC will be entitled to purchase one share of CI Corp common stock for every $20 of shortfall at an exercise price of $0.00001 per share. A shortfall of $800 million would permit the FDIC Option to be exercised at an aggregate price of $400 for all of the shares of common stock of CI Corp owned by Holding, resulting in the complete elimination of Holding's equity interest in CI Corp. Holding believes it likely that the Option will be exercised in full.

e. The FDIC purchased (1) 32 million shares of Junior Perpetual Convertible Preference Stock ("Convertible Preference Stock") of CI Corp, each share of which will automatically convert into five shares of common stock of CI Corp (not of Holding) upon transfer by the FDIC to a third party, for a total of 160 million shares of common stock of CI Corp if all the Convertible Preference Stock is transferred and (2) 11.2 million shares of non-voting Adjustable-Rate Preferred Stock, Class A of CI Corp.

3. Holding, CI Corp and the Bank are all subject to special, comprehensive restrictions and commitments contained in contracts entered into in connection with the Restructuring Plan. Among other restrictions, neither Holding, CI Corp nor the Bank may, without the prior written approval of the FDIC, authorize or issue any shares of its capital stock; declare or pay dividends on its capital stock; or enter into certain fundamental corporate transactions such as mergers or substantial sales or purchases of assets. In addition, Holding may not incur any indebtedness unless such indebtedness is subordinated, on terms and conditions satisfactory to the FDIC, to all claims of the FDIC in respect of the Option. Holding is required (subject to the Option) to maintain record and beneficial ownership of 100% of the shares of common stock of CI Corp it received pursuant to the Restructuring Plan and may not, without the prior written approval of the FDIC, transfer or encumber any of these shares. Any dividends which Holding receives from CI Corp, and any earnings thereon, are subject to the FDIC Option and therefore must also be held for the benefit of the FDIC. The FDIC also has the power to remove CI Corp directors and to veto nominations of CI Corp directors.

4. Both Holding and CI Corp are registered bank holding companies and as such are subject to regulations by the Federal Reserve Board. The Bank is subject to regulation by the Comptroller of the Currency as a national bank. Further, the common stock of Holding and CI Corp is registered under the Securities Exchange Act of 1934 and is subject to the reporting requirements thereunder.

5. Prior to December 1, 1986, Holding's approximately 40.3 million shares of CI Corp common stock amounted to 73.3% of the approximately 55 million shares then outstanding. On December 1, 1986, the FDIC consummated the sale of 50 million shares of CI Corp common stock through the conversion of 10 million of the 32 million shares of Convertible Preference Stock it owns. As a result of such sale, the number of shares of common stock of CI Corp outstanding has increased to approximately 105 million and the interest represented by Holding's approximately 40.3 million shares has been reduced from 73.3% to 38.4%. Moreover, underwriters exercised an option on December 5, 1986, to purchase an additional 2.5 million

shares of CI Corp Common Stock to cover over-allocations further reducing Holding's percentage interest in CI Corp.

6. Subsequent to the FDIC's sale of 50 million shares of CI Corp common stock described above, Holding prima facie became an investment company within the meaning of section 3(a)(3) of the 1940 Act because (a) CI Corp ceased to be a majority-owned subsidiary of Holding as defined in section 2(a)(24) and (b) Holding's shares of CI Corp common stock, which constitute its only significant asset, therefore became "investment securities" for purposes of section 3(a)(3).

7. In light of the purposes for which Holding was created and its actual functions, Holding has requested that the Commission grant an order under section 3(b)(2) finding and declaring that Holding is primarily and directly engaged in a business other than that of investing, reinvesting, owning, holding or trading in securities, namely, the business of (a) acting in essence as an escrow agent with respect to the CI Corp common stock held by it, as a temporary means of accomplishing the Restructuring Plan, until the facts bearing on whether the FDIC Option will be exercised can be known, and (b) monitoring the collection of the Transferred Loans in the interim. Alternatively, Holding has requested an order under section 6(c) exempting it from all provisions of the Act and all rules and regulations thereunder on the grounds that (a) Holding is totally outside the ambit of abuses and problems to which the Act is directed, (b) the Act would impose a superfluous and inappropriate system on top of the pervasive regulatory systems to which Holding and its subsidiaries are already subject, (c) Holding's assets are static in nature and there is therefore no opportunity for the officers and directors of Holding to "manage" Holding's "portfolio" in a manner consistent with their own interest or that of their affiliates as opposed to the interest of Holding's stockholders, and (d) such exemption is therefore necessary and appropriate in the public interest and consistent with the protection of investors and the purposes fairly intended by the policy and provisions of the Act.

Applicant's Conditions: If the requested order is granted, the Applicant agrees to the following conditions:

1. The order will remain in effect until (a) September 26, 1990 or (b) such earlier time as (1) the affairs of Holding have been wound up and Holding has been dissolved or (2) the circumstances giving rise to the order no longer exist.

2. The proceeds of any dividends paid on the CI Corp common stock held by Holding will be invested only in government securities so long as the order is in force.

For the Commission, by the Division of Investment Management, under delegated authority.

Dated: December 24, 1986.

Jonathan G. Katz,

Secretary.

FR Doc. 87-306 Filed 1-6-87; 8:45 am]

BILLING CODE 8010-01-M

[Rel. No. IC-15515; 812-6492]

Lifetime Money Market et al.; Application for Exemption

December 31, 1986.

AGENCY: Securities and Exchange Commission ("SEC").

ACTION: Notice of application for exemption and approval under the Investment Company Act of 1940 ("the 1940 Act").

Applicants: Lifetime Money Market Trust, Lifetime Managed Municipal Bond Trust, Lifetime Government Income Plus Trust, Lifetime High Income Trust, Lifetime Capital Growth Trust, Lifetime Emerging Growth Trust, Lifetime Managed Sectors Trust, Lifetime Global Equity Trust and Lifetime Conservation Equity Trust (individually, "Applicant," and collectively, "Applicants").

Revelant 1940 Act Sections: Exemption requested under section 6(c) from the provisions of section 2(a)(32), 2(a)(35), 22(c) and 22(d) and Rule 22c-1, and approval of exchange offers requested under Section 11(a).

Summary of Application: Each Applicant seeks an order to permit it to assess and waive a contingent deferred sales charge on certain redemptions of its initials and future series or classes of shares, and to permit the imposition of a service charge of $5.00 on exchanges of Applicants' shares made pursuant to a continuing offer of exchange.

Filing Dates: The application was filed on October 3, 1986, and amended on November 20, December 2 and December 16, 1986.

Hearing or Notification of Hearing: If no hearing ordered, the application will be granted. Any interested person may request a hearing on this application, or ask to be notified if a hearing is ordered. Any request must be received by the SEC by 5:30 p.m., on January 26, 1987. Request a hearing in writing, giving the nature of your interest, the reason for the request, and the issues you contest. Serve each of the Applicants with the request, either personally or by mail, and also send it to the Secretary of the SEC, along with proof of service by affidavit, or, for lawyers, by certificate. Request notification of the date of a hearing by writing to the Secretary of the SEC.

ADDRESS: Secretary, SEC, 450 5th Street NW, Washington, DC 20549. Applicants, 200 Berkeley Street, Boston, Massachusetts 02116 Attention: Arnold D. Scott, Esq.

FOR FURTHER INFORMATION CONTACT: Victor R. Siclari, Staff Attorney (202) 272-2847 or Brion R. Thompson, Special Counsel (202) 272-3016 (Division of Investment Management).

SUPPLEMENTARY INFORMATION: Following is a summary of the application; the complete application is available for a fee from either the SEC's Public Reference Branch in person or the SEC's commercial copier who can be contacted at (800) 231-3282 (in Maryland (301) 258-4300).

Applicants' Representations

1. Each Applicant was organized as a business trust under the Laws of the Commonwealth of Massachusetts and is requested under the 1940 Act as an open-end, management investment company. Although none of the Applicants have any current intention to create and issue any additional series or classes of shares, each Applicant requests that the exemptive order extend to such shares which it offers at any time hereafter on substantially the same basis.

2. The principal underwriter of each Applicant is MFS Investment Services, Inc. (the "Distributor"), and the investment adviser of each Applicant is Lifetime Advisers, Inc. (the "Adviser"). Each of the Distributor and the Adviser is a subsidiary of Massachusetts Finaicial Services Company ("MFS"). MFS is a subsidiary of Sun Life Assurance Company of Canada (U.S.), which in turn is a subsidiary of Sun Life Assurance Company of Canada.

3. Each Applicant proposes to: (1) Offer its shares without an initial sales charge but subject to a contingent deferred sales charge (the "Charge") to be paid directly to the Distributor, (2) distribute its share pursuant to a plan of distribution adopted in accordance with Rule 12b-1 under the 1940 Act (the "Plan"), and (3) impose a service charge of $5.00 on exchange of Applicant's shares made pursuant to a continuing offer of exchange ("Exchange Offer").

4. Even though there is no initial sales charge, the Distributor compensates each dealer which sells shares of an

Applicant at the rate of 4% of the purchase price of Applicant's shares sold through such dealer. The Charge will only be imposed on investments in Applicant's shares upon which a dealer commission has been paid ("Direct Purchases"). Such investments will be subject to the Charge for a period of six years from the time of purchase. Solely for purposes of determining the number of years from the time of purchase of Applicant's shares, all such Direct Purchases will be aggregated on a calendar year basis, with the effect that all Direct Purchases made during a calendar year, regardless of when during the year they have occurred, will age one year on December 31 of that year and each subsequent year.

5. At the time of redemption, the amount by which the value of shareholder's account represented by Direct Purchases exceeds the sum of the six calendar year aggregations of Direct Purchases may be redeemed without Charge ("Free Amount"). No Charge will ever be assessed on additional shares acquired through reinvestment of dividends, interest or capital gain distributions which have been automatically reinvested in additional shares ("Reinvested Shares"). At the time of redemption, the amount of the redemption equal to the then-current value of Reinvested Shares and any Free Amount will not be subject to the Charge, but any amount of the redemption in excess of the aggregate of the then-current value of Reinvested Shares and such Free Amount will be subject to the Charge. In addition, no sales commissions will be paid by the Distributor on certain sales of Applicants' shares and thus, no Charge will be imposed on redemptions of such shares, as more fully described in the application.

6. The amount of any Charge will be calculated on the basis of the number of calendar years since the investor made the purchase from which an amount is being redeemed. The Charge will be 6% for redemptions in the first calendar year of purchase and will decline 1% for each calendar year thereafter until the seventh and following years when no Charge will be assessed on redemptions. The amount of the Charge will be calculated by first determining the date on which the Direct Purchase which is the source of the redemption was made, and then applying the appropriate percentage to the amount of the redemption that is subject to the Charge. In determining whether a Charge is payable and, if so, the percentage Charge applicable, it will be assumed that the amount invested first is the first to be redeemed. This will result in any such Charge being imposed at the lowest possible rate.

7. Under the proposed Exchange Offers, each Applicant will offer to exchange its shares for shares of any of the eight other Applicants at their relative net asset values without the imposition of the Charge at the time of the exchange. However, a $5.00 service fee will be deducted on each exchange and paid to Massachusetts Financial Service Center, Inc. (the "Shareholder Service Agent"). For purposes of calculating the Charge upon redemption of shares acquired in such an exchange, the purchase of shares acquired in one or more exchanges will be deemed to have occurred at the time of the original purchase of the exchanged shares.

8. Under the Plan of each Applicant, the Applicant will pay to the Distributor a distribution fee at an annual rate of 1.00% of the Applicant's average daily net assets to compensate the Distributor for distribution services provided to the Applicant. The Distributor will pay for expenses of printing prospectuses and reports used for sales purposes, expenses of the preparation and printing of sales literature, and other distribution related expenses, including the 4% dealers commission. Also, commencing in the second year of the Applicant's operation, the Distributor will pay each dealer which sells shares of an Applicant a maintenance fee equal to .25% per annum of such Applicant's average daily net assets represented by shares of such Applicant sold through such dealer. Thus, the Distributor will receive directly the proceeds of the Charge imposed upon any redemption, and the amounts of an Applicant's shares redeemed will be removed from the base upon which the distribution fee under the Applicant's Plan is calculated. In their review of the Plan pursuant to Rule 12b-1, the Trustees of each Applicant will consider, among other things, the use by the Distributor of revenues raised by the Charges.

9. The requested exemptions and the approval of the Exchange Offers are appropriate in the public interest and consistent with the protection of investors and the purposes fairly intended by the policy and provisions of the 1940 Act. The proposed Charge permits shareholders of each Applicant to have the advantage of greater investment dollars working for them from the time of their purchase of shares in the Applicant. Furthermore, the decision not to impose the Charge in connection with certain redemptions of Applicant's shares is appropriate and fair because such shares are sold at little or not selling expense to the Distributor, no sales commission to a dealer is involved in such sales, and the imposition of a Charge for an involuntary redemption is equivalent to imposing a penalty.

10. The imposition of the $5.00 service fee under the Exchange Offers is fair and will not harm shareholders or discriminate among shareholders of the Applicants. The Exchange Offers will provide shareholders the opportunity to change their investment objective from time to time. Furthermore, the $5.00 service fee is designed merely to compensate the Shareholder Service Agent for its costs incurred in facilitating exchanges between the Applicants.

Applicants' Proposed Conditions: If the requested order is granted, the Applicants agree to the following conditions:

1. The Applicants will comply with the provisions of Rule 22d-1 under the 1940 Act.

2. The Applicants will comply with the provisions of proposed Rule 11a-3 under the 1940 Act when and if it is adopted by the Commission.

For the Commission, by the Division of Investment Management, under delegated authority.

Jonathan G. Katz,

Secretary.

[FR Doc. 87-307 Filed 1-6-87; 8:45 am]

BILLING CODE 8010-01-M

[Rel. No. IC-15499; 812-6293]

Morgan Stanley Group Inc., et al.; Application for Exemption

December 24, 1986.

AGENCY: Securities and Exchange Commission ("SEC").

ACTION: Notice of application for exemption under the Investment Company Act of 1940 ("the 1940 Act").

Applicants: Morgan Stanley Group Inc. ("Morgan Stanley") and Morgan Stanley Capital I Inc. ("Subsidiary") (collectively, the "Applicants").

Relevant 1940 Act Section: Exemption requested under section 6(c) from all provisions of the 1940 Act.

Summary of Application: Applicants seek a conditional order exempting the Subsidiary and certain trusts that it has formed or may form from all provisions of the 1940 Act in connection with the Subsidiary's proposed issuance of collateralized mortgage obligations and sale of beneficial ownership interests in such trusts.

Filing Date: The application was filed on January 31, 1986, and amended on October 21 and December 19, 1986.

Hearing or Notification of Hearing: If no hearing is ordered the application will be granted. Any interested person may request a hearing on this application, or ask to be notified if a hearing is ordered. Any requests must be received by the SEC by 5:30 p.m., on January 16, 1987. Request a hearing in writing, giving the nature of your interest, the reason for the request, and the issues you contest. Serve either Applicant with the request, personally or by mail, and also send it to the Secretary of the SEC, along with proof of service by affidavit, or, for attorneys, by certificate. Request notification of the date of a hearing by writing to the Secretary of the SEC.

ADDRESSES: Secretary, SEC, 450 5th Street NW., Washington, DC 20549. Morgan Stanley Group Inc., 1251 Avenue of the Americas, New York, New York 10020. Morgan Stanley Capital I Inc., 1225 North Loop West, Suite 1050, Houston, Texas 77008.

FOR FURTHER INFORMATION CONTACT: Sherry Hutchins, Staff Attorney at (202) 272-2799 or Brion Thompson, Special Counsel at (202) 272-3016, Division of Investment Management, Office of Investment Company Regulation.

SUPPLEMENTARY INFORMATION: Following is a summary of the application; the complete application is available for a fee from either the SEC's Public Reference Branch in person or the SEC's commercial copier (800) 231-3282 (in Maryland (301) 253-4300.

Applicant's Representations

1. The Subsidiary is a direct, wholly-owned limited purpose financing subsidiary of Morgan Stanley. The Subsidiary, a Delaware corporation formed on January 28, 1985, was organized to facilitate the financing of mortgage loans through the issuance of one or more series of bonds collateralized primarily by Agency Certificates (as defined below) and it will not engage in any business or investment activities unrelated to such purpose.

2. The Subsidiary has formed and will form separate trusts ("Trusts") for the limited purpose of issuing one or more series ("Series") of collateralized mortgage obligations ("Bonds") and investing in certain Agency Certificates [1] which will be used to collateralized such Bonds.

3. Each Trust has been or will be formed pursuant to a separate deposit trust agreement ("Agreement") between the Subsidiary, acting as depositor, and a bank or trust company or other fiduciary acting as owner-trustee ("Owner Trustee"). Each Trust will issue one or more Series of Bonds under the terms of an indenture ("Indenture") between the Owner Trustee and an independent trustee ("Indenture Trustee"), as supplemented by one or more series supplements. The Indenture will be qualified under the Trust Indenture Act of 1939 unless an appropriate exemption is available.

4. In the case of each Series of Bonds: (a) Each Trust will hold no substantial assets other than the Agency Certificates and cash; (b) the Bonds will be secured by Agency Certificates or cash having a collateral value determined under the Indenture, at the time of issuance and following each payment date, equal to or greater than the outstanding principal balance of the Bonds; (c) distributions of principal and interest received on the Agency Certificates securing the Bonds and any applicable reserve funds, plus reinvestment income thereon, will be sufficient to pay all interest on the Bonds and to retire each class of Bonds by its stated maturity; and (d) the Agency Certificates will be assigned by the Owner Trustee to the Indenture Trustee and will be subject to the lien of the related Indenture.

5. In addition to the issue and sale of the Bonds, the Subsidiary intends to sell the beneficial interests in each Trust to a limited number, in no event more than one hundred, of sophisticated institutional investors in transactions exempt from the registration requirements of the Securities Act of 1933 ("1933 Act") under section 4(2) thereof. Such institutional investors may include one or more banks, savings and loan associations, insurance companies, and pension plans or other investors that would have prior experience in making investments in mortgage related securities or real estate ("Eligible Institutions"). Each Eligible Institution will be required to represent that it is purchasing such beneficial interests for investment purposes. In addition, the Agreement relating to each Trust will further prohibit the transfer of any certificates for such beneficial interests if there would be more than one hundred Eligible Institutions holding of such certificates at any time.

6. Neither the holders of the beneficial interests of any of the Trusts, the Owner Trustee nor the Indenture Trustee will be able to impair the security afforded by the Agency Certificates to the holders of the Bonds. That is, without the consent of each Bondholder to be affected, neither the holders of the beneficial interest of any of the Trusts, the Owner Trustee nor the Indenture Trustee will be able to: (1) Change the stated maturity on any Bonds; (2) reduce the principal amount or the rate of interest on any Bonds; (3) change the priority of payment on any class of any Series of Bonds; (4) impair or adversely affect the Agency Certificates securing a Series of Bonds; (5) permit the creation of a lien ranking prior to or on a parity with the lien of the related Indenture with respect to the Agency Certificates; or (6) otherwise deprive the Bondholders of the security afforded by the lien of the related Indenture.

7. The sale of the beneficial interests in each Trust will not alter the payment of cash flows under the Indenture, including the amounts to be deposited in the collection account or any reserve fund created pursuant to the Indenture to support payments of principal and interest on the Bonds.

8. No holder of a controlling interest in a Trust (as the term "control" is defined in Rule 405 under the 1933 Act), will be affiliated with either the custodian or any nationally recognized statistical rating agency rating the Bonds. At the time of its purchase of an equity certificate, none of the owners of the beneficial interests in the Trust will be affiliated with the Indenture Trustee.

9. The interests of the Bondholders will not be compromised or impaired by the ability of the Subsidiary to sell beneficial interests in each Trust, and there will not be a conflict of interest between the Bondholders and the holders of the beneficial interests for several reasons: (a) The collateral which initially will be deposited into a Trust and will be pledged to secure the Bonds issued by such Trust will not be speculative in nature because it will consist solely of GNMA Certificates,

[1] By definition, the "Agency Certificates" collateralizing the Bonds will consist of (1) "fully-modified" pass-through mortgage-backed certificates guaranteed by the Government National Mortgage Association ("GNMA Certificates"), (2) mortgage participation certificates issued by the Federal Home Loan Mortgage Corporation ("FHLMC Certificates"), and (3) guaranteed mortgage pass-through securities issued by the Federal National Mortgage Association ("FNMA Certificates"). All or a portion of the Agency Certificates securing a Series of Bonds may be "partial pool" Agency Certificates. Some of the GNMA Certificates securing a Series of Bonds may be backed by mortgage loans that provide for payments during the initial portion of their term that are less than the actual amount of principal and interest payable thereon on a level debt service basis ("GPM GNMA Certificates"). In addition to the Agency Certificates directly securing the Bonds, a Series may have additional collateral which may include certain collection accounts and reserve funds as specified in the related Indenture.

FNMA Certificates or FHLMC Certificates, which Agency Certificates are guaranteed as to timely payment of interest and timely or ultimate payment of principal by each respective agency; (b) the Bonds will only be issued provided an independent nationally recognized statistical rating agency has rated such Bonds in one of the two highest rating categories; which by definition means that the capacity of the issuing Trust to repay principal and interest on the Bonds is very strong; (c) the Indenture under which the Bonds will be issued subjects the collateral pledged to secure the Bonds, all income distributions thereon and all proceeds from a conversion, voluntary or involuntary, of any such collateral to a first priority perfected security interest in the name of the Indenture Trustee on behalf of the Bondholders [2]; and (d) the owners of the beneficial interests will be entitled to receive current distributions representing the residual payments on the collateral from each Trust in accordance with the terms of the applicable Agreement, which distributions are analogous to dividends payable to a shareholder of a corporate issuer of collateralized mortgage obligations. Furthermore, unless the Trust elects to be treated as a "real estate mortgage investment conduit" ("REMIC") under the Internal Revenue Code of 1986, the beneficial interest owners will be liable for the expenses, taxes and other liabilities of the Trust (other than the principal and interests on the Bonds) to the extent not previously paid from the Trust estate. The choice of the form of issuer for the Bonds and the identity of the owners of the beneficial interests in such issuer, however, will not alter in any way the payments made to the holders of such Bonds, which are payments governed by an Indenture which will meet the requirements of the Trust Indenture Act of 1939.

[2] The Indenture further specifically provides that no amounts may be released from the lien of the Indenture to be remitted to the issuing Trust (and any owner of beneficial interests thereof) until (i) the Trustee has made the scheduled payment of principal and interest on the Bonds, (ii) the Trustee has received all fees currently owed to it, (iii) the firm of independent accountants has received all fees owed to it for services rendered under the Indenture (iv) to the extent required by any supplemental indentures executed in connection with the issuance of the Bonds, deposits have been made to certain reserve funds which will ultimately be used to make payments of principal and interest on the Bonds and (v) any other persons have been paid the amounts due them as operating expenses of the Issuer. Once amounts have been released from the lien of the Indenture, the Owner Trustee under the Agreement is entitled to reasonable compensation out of such amounts.

10. Applicants do not anticipate that the Trust will incur any additional expenses if the Trust elects to be treated as a REMIC. Should the Trust make such election, the expenses of the Trust will be paid from the Trust estate as set forth in the Agreement.

11. The aggregate interests of the owners of the beneficial interests in the collateral and the expected returns earned by such owners will be far less than the aggregate payments made to Bondholders. Applicants do not intend to deposit in any Trust Agency Certificates with a collateral value which exceeds 110% of the aggregate principal amount of the related Bonds.

12. Except to the extent permitted by the limited right to substitute collateral, it will not be possible for the owners of the beneficial interests to alter the collateral initially deposited into a Trust, and in no event will such right to substitute collateral result in a diminution in the value or quality of such collateral. Although it is possible that any collateral substituted for collateral initially deposited into a Trust may have a different prepayment experience than the original collateral, the interests of the Bondholders will not be impaired because: (a) The prepayment experience of any collateral will be determined by market conditions beyond the control of the owners of the beneficial interests, which market conditions are likely to affect all mortgage certificates of similar payment terms and maturities in a similar fashion; (b) the interests of the holders of the beneficial interests are not likely to be greatly different from those of the Bondholders with respect to collateral prepayment experience; and (c) to the extent that it may be possible for the owners of the beneficial interests to cause the substitution of collateral that has a different prepayment experience than the original collateral, this situation is no different for Bondholders than the traditional collateralized mortgage obligation structure where bonds are issued by an entity that is a wholly-owned subsidiary. Further, due to the fact that there usually will be more than one owner of the Trust, it is not more likely that the owners will be able to agree on any desired substitution of collateral than if there were a single owner who could unilaterally decide on the timing and execution of the substitution.

13. The requested order is necessary and appropriate in the public interest because: (a) The Trusts should not be deemed to be entities to which the provisions of the 1940 Act were intended to be applied; (b) the Trusts may be unable to proceed with their proposed activities if the uncertainties concerning the applicability of the 1940 Act are not removed; (c) the Trusts' activities are intended to serve a recognized and critical public need; (d) granting of the requested order will be consistent with the protection of investors because they will be protected during the offering and sale of the Bonds by the registration or exemption provisions of the 1933 Act and thereafter by the Indenture Trustee representing their interests under the Indenture; and (e) the beneficial interests in the Trusts will be held entirely by Morgan Stanley Capital or offered only to a limited number of sophisticated institutional investors through private placements.

Applicants' Conditions: Applicants agree that if an order is granted it will be expressly conditioned on the following conditions:

1. Each Series of Bonds will be registered under the 1933 Act, unless offered in a transaction exempt from registration pursuant to section 4(2) of the 1933 Act.

2. The Bonds will be "mortgage-related securities" within the meaning of section 3(a)(41) of the Securities Exchange Act of 1934, as amended. In addition, the Mortgage Collateral underlying the Bonds will be limited to GNMA Certificates, FNMA Certificates, or FHLMC Certificates.

3. If new Agency Certificates are substituted, the substitute certificates will: (i) Be of equal or better quality than the collateral replaced; (ii) have similar payment terms and cash flow as the collateral replaced; (iii) be insured or guaranteed to the same extent as the collateral replaced; and (iv) meet the conditions set forth in paragraphs (2), (4) and (6). In addition, new collateral may not be substituted for more than 40% of the aggregate face amount of the Agency Certificates initially pledged as Mortgage Collateral. In no event may any new Mortgage Collateral be substituted for any substitute Mortgage Collateral.

4. All Agency Certificates, funds, accounts or other collateral securing a Series of Bonds ("Collateral") will be held by an Indenture Trustee, or on behalf of an Indenture Trustee by an independent custodian. The custodian may not be an affiliate (as the term "affiliate" is defined in Rule 405 under the 1933 Act, 17 CFR 230.405) of the Applicants. The Indenture Trustee will be provided with a first priority perfected security or lien interest in and to all Collateral.

5. Each Series of Bonds will be rated in one of the two highest bond rating

categories by at least one nationally recognized statistical rating organization that is not affiliated with the Applicants. The Bonds will not be considered "redeemable securities" within the meaning of section 2(a)(32) of the 1940 Act.

6. No less often than annually, an independent public accountant will audit the books and records of the Trust and, in addition, will report on wehter the anticipated payments of principal and interest on the Mortgage Collateral continue to be adequate to pay the principal and interest on the Bonds in accorance with their terms. Upon completion, copies of the auditor's reports will be provided to the Indenture Trustee.

7. In addition, the above representations regarding the equity interests (and more fully described in the application will be express conditions to the requested order.

For the commission, by the Division of Investment Management, under delegate authority.

Jonathan G. Katz,

Secretary.

[FR Doc. 87-308 1-6-87; 8:45 am]

BILLING CODE 8010-01-M

[Release No. IC-15516; File No. 812-6544]

Shearson Lehman Asset Allocation Fund L.P., Shearson Lehman Investment Strategy Advisors Inc.; Application

December 31, 1986.

AGENCY: Securities and Exchange Commission ("SEC").

ACTION: Notice of Application for Exemption under the Investment Company Act of 1940 ("Act").

Applicants: Shearson Lehman Asset Allocation Fund L.P. ("Fund") and Shearson Lehman Investment Strategy Advisors Inc. ("Strategy Advisors").

Relevant Sections of Act: Exemption requested under section 6(c) of the Act from the provisions of section 2(a)(19) of the Act.

Summary of Application: Applicants seek an order exempting the Fund and certain of its general partners from the provisions of section 2(a)(19) of the Act to the extent those general partners would be deemed "interested persons" of the Fund and Strategy Advisors, solely because of their status as general partners.

Filing Date: November 26, 1986.

Hearing or Notification of Hearing: If no hearing is ordered, an order disposing of the application will be issued. Any interested person may request a hearing on this application, or ask to be notified if a hearing is ordered. Any requests must be received by the SEC no later than 5:30 p.m., on January 23, 1987. Requests must be in writing, setting forth the nature of your interest, the reasons for the request, and the issues contested. Applicants should be served with a copy of the request, either personally or by mail, and the request should also be sent to the Secretary of the SEC, along with proof of service (by affidavit or, in the case of an attorney-at-law, by certificate). Notification of the date of a hearing should be requested by writing to the Secretary of the SEC.

ADDRESSES: Secretary, SEC, 450 Fifth Street NW., Washington, DC 20549; Fund, Two World Trade Center, New York, New York 10048; Strategy Advisors, American Express Tower, World Financial Center, New York, New York 10285.

FOR FURTHER INFORMATION CONTACT: Curtis R. Hilliard, Attorney, (202) 272-3026 or H.R. Hallock, Jr., Special Counsel (202) 272-3030, Office of Investment Company Regulation.

SUPPLEMENTARY INFORMATION: The following is a summary of the application. The complete application is available for a fee from either the SEC's Public Reference Branch in person or the SEC's commercial copier (800) 231-3282 (in Maryland (301) 258-4300).

Applicants' Representations

1. The Fund is an open-end, non-diversified management investment company that was organized as a limited partnership under the laws of the State of Delaware on October 29, 1986. The Fund's investment objective is to seek to maximize total return, consisting of capital appreciation and current income. The Fund will attempt to achieve its objective by investing in a wide range of equity and debt securities of both domestic and foreign issuers, options, commodity interests and money market instruments, and be using certain sophisticated investment strategies and techniques, including, for example, selling securities short. The Fund's contemplated use of commodity futures contracts and options on those contracts will result in its being deemed a commodity pool, the operators of which are subject to regulation by the Commodity Futures Trading Commission ("CFTC") under the Commodity Exchange Act ("CEA").

2. Strategy Advisors, a newly-formed subsidiary of Shearson Lehman Brothers Inc. ("Shearson Lehman"), serves as the Fund's investment adviser and in that capacity determines the manner in which the Fund's assets will be allocated among investments and market sectors. Strategy Advisors was incorporated on October 22, 1986 under the laws of the State of Delaware for the purpose of advising the Fund and has no other clients at this time. Strategy Advisers will seek in the near future to become (1) registered with the Commission under the Investment Advisers Act of 1940 as an investment adviser, (2) registered with the CFTC as a commodity pool operator under the CEA, and (3) a member of the National Futures Association. American Express Asset Management S.A., Bernstein-Macaulay, Inc., The Boston Company Advisors, Inc. ("Boston Advisors"), Lehman Management Co., Inc., Shearson Asset Management Inc. and Hayden Commodities Corp. each of which is an affiliate of Shearson Lehman, serve as the Fund's sub-investment advisors (collectively, "Sub-Advisors") and will be primarily responsible for the selection of the Fund's investments and the selection of brokers and dealers through which the Fund's portfolio transactions will be executed. Boston Advisors, in addition to serving as a Sub-Adviser, acts as the Fund's administrator, and Shearson Lehman acts as the distributor of shares representing the Fund's partnership interests ("Shares").

3. The Fund was structured as a partnership, rather than as a corporation or business trust, to afford the Fund flexibility to meet its investment objective, while enabling the Fund and its partners ("Partners") to receive, in effect, and "pass through" tax treatment typically available to mutual funds and their shareholders. In light of the limiting effects of the requirements of Subchapter M of the Internal Revenue Code, such as the 90% gross income from dividends requirements, the 30% limit on earnings from short sales and the diversification requirements, the Fund was structured as a limited partnership.

4. The Fund has two classes of Partners: general partners ("General Partners") and limited partners ("Limited Partners"). The General Partners will include five individuals ("Individual General Partners") and one corporate General Partner, Strategy Advisors ("Corporate General Partner"). Three of the Individual General Partners ("Independent General Partners") will be unaffiliated with Shearson Lehman and Strategy Advisors. The Individual General Partners will perform the same functions for the Fund as do the directors of a mutual fund organized as a corporation; the Individual General

Partners will have complete and exclusive control over the management, conduct and operation of the Fund's business. Under the terms of the Fund's Agreement of Limited Partnership ("Agreement"), Strategy Advisors, as the Corporate General Partner, is permitted to participate in the management of the Fund as a General Partner only in the event that no Individual General Partner remains to elect to continue the business of the Fund and then only for the limited period of time (not in excess of 60 days) necessary to convene a meeting of the Partners for the purpose of making such an election. In accordance with Delaware law, the General Partners will be in a fiduciary relationship with the Limited Partners similar to that of the directors of a corporation with its shareholders.

5. The Agreement provides that the General Partners are not personally liable to any holder of Shares or any Limited Partner for losses suffered by the Fund, so long as the General Partners acted in good faith and in the best interest of the Fund, and so long as the General Partners' conduct did not constitute negligence or misconduct. The Agreement also provides that the General Partners will not be liable to any Limited Partner by reason of any change in any federal or state income tax laws applicable to the Fund or to the Limited Partners, so long as the General Partners have acted in good faith and in a manner reasonably believed to be in the best interests of the Limited Partners. A General Partner is entitled to indemnification from the Fund against liabilities and expenses to which he may be subject in his capacity as a General Partner, so long as he has acted in good faith and for a purpose that he reasonably believed to be in the best interests of the Limited Partners. A General Partner is entitled to indemnification from the Fund against liabilities and expenses to which he may be subject in his capacity as a General Partner, so long as he has acted in good faith and for a purpose that he reasonably believed to be in the best interests of the Fund, and so long as the expenses were not the result of negligence or misconduct on the part of the General Partner.

6. The Agreement's provisions dealing with the liability and indemnification of General Partners will be supplemented by Shearson Lehman's obtaining a standard, commercially-available, liability insurance policy, which will cover the General Partners, including the Independent General Partners, against liabilities and expenses to which they may be subject in their capacity as General Partners, so long as the General Partners have not engaged in willful misfeasance, bad faith, gross negligence or reckless disregard of their duties. In the event an insurance policy providing this coverage cannot be obtained, or cannot be obtained in the full amount desired, Shearson Lehman will indemnify the General Partners, including the Independent General Partners, against the same liabilities and expenses, so long as the General Partners have not engaged in willful misfeasance, bad faith, gross negligence or reckless disregard of their duties.

7. To preserve the Fund's tax status as a partnership, rather than as an association taxable as a corporation, the Individual General Partners and the Corporate General Partner will at all times own as a group not less than 1% of the Shares outstanding. Under the Agreement, the Corporate General Partner is obligated to contribute to the Fund through the purchase of Shares from time to time amounts in the aggregate sufficient to enable the General Partners to meet the 1% requirement. Moreover, for so long as the Corporate General Partner continues to serve in that capacity it may not redeem or assign Shares it holds as the Corporate General Partner or otherwise accept distributions in cash or property if that action would result in the failure of the General Partners to maintain the required 1% interest in the Fund.

8. Under the Agreement, each Share held by a General Partner is not assignable except to another person who already is a General Partner, and then only with the consent of the Individual General Partners. Shares held by General Partners are redeemable by the Fund only in the event that (1) the holder of the Shares has ceased to be a General Partner or (2) in the opinion of the Fund's counsel, redemption of the Shares held by a General Partner would not jeopardize the status of the Fund as a partnership for Federal income tax purposes.

9. The Agreement provides that Limited Partners are not personally liable for obligations of the Fund unless they take part in the control of the Fund's business. Under the terms of the Agreement, the Limited Partners do not have the right to take part in the control of the Fund's business, but they may exercise the right to vote on matters requiring approval under the Act and on certain other matters, including amendments to the Agreement.

10. Limited Partners do not have the right to transfer or assign Shares voluntarily to other persons except to secure a loan. Limited Partners do have the right to redeem their Shares, however, in accordance with the redemption procedures described in the prospectus and statement of additional information included as part of the Registration Statement.

11. Each of the Individual General Partners is a partner of the Fund and a copartner of Strategy Advisors and, thus, under section 2(a)(3) of the Act, each may be deemed an affiliated person of the Fund and Strategy Advisors. As an affiliated person of the Fund and Strategy Advisors, each of the Individual General Partners, including each Independent General Partner, is an interested person of the Fund and Strategy Advisors under sections 2(a)(19)(A) and 2(a)(19)(B) of the Act. That all of the Individual General Partners would be deemed interested persons of the Fund and Strategy Advisors would preclude the Fund from meeting a number of requirements imposed on a registered investment company by the Act and various rules under the Act.

12. To enable the Fund to comply with the requirements of the Act relating to an investment company's non-interested directors, Applicants, in accordance with section 6(c), seek an exemption from section 2(a)(19) of the Act so that the Independent General Partners will not be considered interested persons of the Fund or Strategy Advisors solely because of their position as General Partners ("Exemption").

13. Applicants believe that the Exemption is consistent with the policies of section 2(a)(19) of the Act as reflected in the express language of the Section, which contains a proviso stating that "no person shall be deemed to be an interested person of an investment company solely by reason of . . . his being a member of its board of directors or advisory board or an owner of its securities . . .." As noted above, the Individual General Partners, including the Independent General Partners, will perform the same functions for the Fund as do the directors of a mutual fund organized as a corporation. Applicants assert that, as a result, the Individual General Partners generally should be subject, for purposes of the Act, to treatment analogous to that afforded to corporate directors of mutual funds, and that the Independent General Partners should be considered not to be interested persons of the Fund solely by virtue of being General Partners.

14. Applicants submit that the Exemption is not only consistent with the policies underlying the Act, but it is

also in the interest of the Fund and the Partners. The Exemption, if granted, will enable the Fund to operate as a limited partnership and thereby afford the Fund flexibility to meet its investment objective, while permitting the Fund and the Partners to receive pass through tax treatment similar to that typically available to mutual funds organized as corporations or business trusts.

Conditions

1. Strategy Advisors agrees, as a condition of the Exemption, to fulfill its obligation under the Agreement to contribute to the Fund through the purchase of Shares from time to time an aggregate amount sufficient to enable the General Partners to own as a group not less than 1% of the Shares outstanding.

For the Commission, by the Division of Investment Management, pursuant to delegated authority.

Jonathan G. Katz,

Secretary.

[FR Doc. 87-309 Filed 1-6-87; 8:45 am]

BILLING CODE 8010-01-M

[Release No. IC-15502 (File No. 813-72)]

Wicklow 1986 Fund; Application For Order Exempting Employees' Securities Companies

December 24, 1986.

Notice is hereby given that Wicklow 1986 Fund, a New York general partnership (the "Initial Partnership" or "Applicant"), c/o McKinsey & Company, Inc., Park Avenue Plaza, 55 East 52nd Street, New York, New York 10022, filed an application on November 19, 1985 and an amendment thereto on December 24, 1986, for an order pursuant to sections 6(b) and 6(e) of the Investment Company Act of 1940 (the "Act") exempting the Initial Partnership and subsequent partnerships meeting the same eligibility criteria ("Subsequent Partnerships") from each and every provision of the Act, or alternatively from sections 7(a), 8(a), 8(b), 10(a), 10(b), 10(f), 12(a), 12(d), 13(a), 14(a), 15(a), 15(c), 16(a), 17(a), 17(d), 17(e), 17(f), 17(g), 17(j), 18(a), 18(d), 18(i), 19(a), 19(b), 20(a), 21(b), 23(a), 23(b), 23(c), 30(a), 30(b), 30(d), 30(f), 31(a), 31(c), 32(a), 32(b), 34(a), and 34(b) of the Act and certain rules thereunder, in connection with their operations as employees' securities companies (The Initial Partnership and the Subsequent Partnerships are collectively referred to herein as the "Partnerships"). Applicant also requests an order, pursuant to section 45(a) of the Act, granting confidential treatment for certain reports to be filed with the Commission. All interested persons are referred to the application on file with the Commission for a statement of the representations contained therein, which are summarized below, and to the Act and the rules thereunder for the text of the applicable statutory provisions.

Applicant represents that the Initial Partnership is a general partnership under the laws of the State of New York, and that all the Partnerships will be general partnerships organized under laws of a State of the United States, which will be established on an annual basis. Applicant further represents that the Partnerships will be established as a means of rewarding and retaining key employees of McKinsey & Company, Inc. ("McKinsey"), and enabling such employees to pool their investment resources and to receive the benefit of certain investment opportunities which come to the attention of McKinsey.

Applicant states that, with one exception, the opportunity to become a partner in the Partnerships will be offered only to employees of McKinsey who are members of McKinsey's management group ("Partners"). At October 1, 1985, there were 213 management group members of McKinsey eligible to participate in the Initial Partnerships. The Partner who is not a management group member has been recently employed by McKinsey for the purpose of devoting a material portion of his time to the affairs of the Partnerships. Applicant further represents that a substantial number of the employees eligible to become Partners are "accredited investors" within the meaning of Rule 501(a)(7) under Regulation D under the Securities Act of 1933 (the "1933 Act"). Applicant also states that the limitations on the persons who may become Partners, in conjunction with other characteristics of Partnerships, will qualify each Partnership as an "employees' securities company" under section 2(a)(13) of the Act.

According to the application, the management of the Initial Partnership will be vested exclusively in a managing committee of the Partners (the "Management Committee"). While serving as members of the Management Committee, these Partners will continue their duties as employees of McKinsey, and only one of them will devote a material portion of his time to managing the affairs of the Partnerships. Applicant expects that Subsequent Partnerships will be managed in a similar manner and that the Management Committees will ordinarily consist of the same individuals for all Partnerships.

Applicant states that any management group member of McKinsey who wishes to join the Initial Partnership must make a capital commitment of at least $10,000 to the Initial Partnership ("Initial Capital Commitment"). An installment equal to 5% of the Initial Capital Commitment will be due on acceptance, with the rest payable upon notice by the Management Committee. At the discretion of the Management Committee, Partners may satisfy calls for subsequent portions of their Initial Capital Commitment by guaranteeing notes of the Initial Partnership issued to banks or other financial institutions. To the extent the 1933 Act might be deemed to apply, the offering of Partnership interests will be made under a section 4(2) exemption from the registration requirements of the 1933 Act. The Initial Partnership will not commence operations unless Initial Capital Commitments totaling $750,000 are received. Subsequent Partnerships will also not commence operations unless capital commitments are received totaling at least a specified minimum, which ordinarily will be not less than $750,000 but in any event will not be less than $100,000. The partnership agreement of each Partnership ("Agreement") will provide that interests in the Partnerships will be non-transferable, except that a Partner may, with the approval of the Management Committee, assign all or a portion of his interests to a member of his immediate family or to one or more Partners.

According to the application, the members of the Management Committee will be initially designated in the Agreement without a vote of the Partners. Applicant represents that the Management Committee will have exclusive control and management of the operation and affairs of the Initial Partnership and will make all investment decisions for the Initial Partnership. Applicant submits that the Management Committee shall observe the standards prescribed in sections 9, 36, 37 and 57(f)(3) and 57(h) of the Act. Applicant further states that no remuneration will be paid by the Initial Partnership to members of the Management Committee for their services to or on behalf of the Initial Partnership. Applicant states that the Subsequent Partnerships will be managed in the same manner.

Applicant asserts that each of the Partnerships will operate as a non-diversified, closed-end investment company of the management type within the meaning of the Act. Applicant states that the investment objectives of the Partnerships will be to seek investments offering long-term growth of capital and

which shelter other income of individual taxpayers from Federal and State income taxes.

Applicant requests exemption from the following provisions of the Act:

Section 7(a), 8 (a) and (b)

Applicant requests this exemption so it does not have to comply with the registration requirements of section 8 and the Partnerships will not be subject to the prohibitions of section 7(a).

Section 10(a)

Applicant requests this exemption to the extent necessary to permit all members of the Management Committee to be "interested persons" of the Partnerships as defined in the Act.

Section 10(b)

Applicant requests an exemption to the extent necessary to permit (i) the Partnerships to employ as broker any Partner or any person of which a Partner is an affiliated person as to any transaction, subject to the provisions of section 17 for which no exemption is sought in the application, (the "Applicable section 17 Provisions"), (ii) the Partnerships, members of the Management Committee or any other Partner, McKinsey or any subsidiary thereof or any other person of which a Partner is an "interested person" (as defined in the Act) to offer or sell interests in the Partnerships as described herein, and (iii) any Management Committee member to be an investment banker or an affiliated person of an investment banker.

Section 10(f)

Applicant requests an exemption to the extent necessary to permit the Partnerships to purchase investments as to which a member of the Management Committee or any other Partner, McKinsey or any subsidiary thereof or any other person of which a Partner is an affiliated person may be deemed to be a "principal underwriter", subject to the Applicable section 17 Provisions.

Section 12(a)

Applicant requests an exemption to the extent necessary to permit the Partnerships, when determined by the Management Committee to be appropriate, to purchase securities on margin, to participate jointly in a securities trading account and to effect short sales.

Section 12(d)

Applicant requests an exemption to the extent necessary to permit the Partnerships to invest in money market mutual funds, other pooled investment vehicles that the Management Committee determines is appropriate in light of the Partnerships' investment objectives, and securities of insurance companies and of "securities related businesses" (as defined in Rule 12d3-1(d)(3)).

Section 13(a)

Applicant requests an exemption to the extent necessary to permit the Partnerships to engage in their investment activities in accordance with their investment objectives but otherwise without any restrictions under than those described in the application.

Section 14(a)

Applicant requests an exemption to the extent necessary for interests in a Partnership to be offered and sold prior to the time such Partnership has a net worth of $100,000.

Section 15(a)(and (c)

Applicant requests an exemption to the extent necessary to permit the Management Committee to provide investment advisory services to the Partnerships without a written contract, and to retain investment advisors unrelated to McKinsey without a written contract, and to retain investment advisors unrelated to McKinsey for the Partnerships without a vote of the Partners.

Section 16(a)

Applicant requests an exemption to the extent necessary to permit the Management Committee members to be selected in accordance with the Agreement without a vote of the Partners. As Partners, the Management Committee members will maintain shared interests with the other Partners.

Section 17(a)

Applicant requests an exemption to the extent necessary to permit the Partnerships to invest, as appropriate, in securities of companies or investment vehicles and other investment properties offered by affiliates of McKinsey on a principal basis or purchase securities or investment properties from such companies or vehicles, to purchase interests in a company or other investment vehicle in which affiliates of McKinsey already own 5% or more of the voting securities of the company or vehicle where such company or vehicle is otherwise affiliated with a Partnership, and to effect borrowings guaranteed by Partners to fund such Partners' capital commitments. Applicant represents that these transactions will only be affected upon a determination by the Management Committee that the terms of the transaction are reasonable and fair to the Partners of the Partnerships involved in the transaction and do not involve overreaching of the Partnerships or their investors on the part of any person concerned. Applicant specifically represents and concedes that the Management Committee is subject to and will, at all times comply with, sections 36, 57(f)(3) and 57(h) of the Act.

Section 17(d)

Applicant requests an exemption to the extent necessary to permit the Partnerships to engage in certain joint transactions in which affiliated persons of the Partnerships may also be participants. Applicant undertakes that the Partnerships will not make any investment in which affiliates of McKinsey or any member of the Management Committee is a participant or plans, concurrently or otherwise, directly or indirectly to become a participant (other than through an investment in or relationship with a Partnership or Partnerships), except that this undertaking shall not be applicable to any transaction effected upon a determination by the Management Committee of a Partnership that the terms of the transaction are reasonable and fair to the Partners of the Partnership, do not involve overreaching of the Partners or the Partnership on the part of any person concerned and would not disadvantage the Partnership in the making, maintaining or disposing of its investment position relating to such transaction. Applicant represents that any investments which are made concurrently with an affiliate of McKinsey will be made by the Partnerships on the same basis as the affiliate of McKinsey. Applicant further represents that any joint investments will be made (i) by individual management group members making their own individual investment decisions apart from McKinsey and/or (ii) by employees of McKinsey who are not partners of the Partnership involved, subject to the following limitations: (i) The required Management Committee determinations as to joint investments stated above in this paragraph would apply if management group members who hold in the aggregate of 15% or more of the equity interest in McKinsey make a joint investment with a Partnership; and (ii) in the case of a joint investment with a Partnership (a) by management group members who hold in the aggregate 15% or more of the equity interest in McKinsey or (b) by management group members or employees of McKinsey who hold

individually or in the aggregate 10% or more of the equity interest of any joint investment with a Partnership, then in any such case referred to in sub-clause (a) or (b) of clause (ii), the Management Committee undertakes to obtain a commitment from each such person that such person will not dispose of his or her investment in such joint investment without giving sufficient, but not less than one day's, notice to the Mangement Committee so that the Partnership has the opportunity to dispose of its investment in the joint investment prior to or concurrently with such person and on the same terms as such person. In addition, the Applicant specifically represents and concedes that the Management Committee is subject to and will, at all times, comply with the requirements of sections 36, 57(f)(3) and 57(h) of the Act.

Section 17(e)

Applicant requests an exemption to the extent necessary to permit Partners of the Partnerships and affiliates of McKinsey who bring investment opportunities to the attention of, or make investment opportunities available to, the Partnerships to receive compensation for their duties at McKinsey or from any other source other than any compensation paid specifically on account of bringing investment opportunties to the attention of, or making investment opportunities available to, the Partnerships.

Section 17(f) and Rule 17f-2

Applicant requests an exemption to the extent a written contract is required if a Partnership acts as its own custodian pursuant to Rule 17f-2. Applicant also requests that compliance with Rule 17f-2 be deemed effected notwithstanding that employees of McKinsey who are not Management Committee members will be deemed employees of the Partnerships and Management Committee members will be deemed officers of the Partnerships and (ii) that verification will be effected quarterly by two employees of McKinsey who are not Management Committee members.

Section 17(g)

Relief is requested to the extent necessary to permit the Partnerships to approve their fidelity bonds without the necessity of having a majority of the Management Committee who are not "interested persons" take such action and make such approvals as set forth in Rule 17g-1 and to permit the Management Committee members to treat all Partnerships together as a single Partnership for purposes of making determinations under section 17(g) and Rule 17g-1.

Section 17(j)

Applicant requests an exemption to the extent necessary to permit the Partnerships not to adopt a code of ethics and to engage in transactions permitted by the Applicable section 17 Provisions.

Section 18(a)

Applicant requests an exemption to the extent necessary (a) to permit the Partnerships (i) to borrow to fund capital commitments of Partners who guarantee such borrowings, (ii) to issue notes to purchase the Partnership interest of the estate of a deceased Partner, a Partner who has become permanently disabled or a Partner who has ceased to be employed by McKinsey or an affiliate thereof in accordance with the Agreement, (iii) to effect non-recourse borrowings, and (iv) to borrow to fund the capital commitments of partners in capital default, in each case described in items (i)-(iv) without compliance with the asset coverage, voting and default requirements of section 18 (a), and (b) to disregard the borrowings described in items (i)-(iv) in computing their asset coverage. Applicant represents that the Partners do not require the protection of section 18(a) with respect to these borrowings because as to those described in (i) the Partnership can look to the guaranteeing Partner, on whose behalf the loan has been incurred, for repayment; as to those described in (ii) because such borrowings would be incurred in an effort to minimize the effects on the Partnership's existing investments and liquidity position of purchasing a Partner's interest; as to those described in (iii) because a non-recourse lender would be precluded from lookng beyond the property securing the borrowing; and as to those described in (iv) because the Partnership can look to the defaulting for reimbursement pursuant to the terms of the Organizational Documents. Applicant states that any such borrowings would require the approval of the Management Committee.

Section 18(d)

Applicant requests an exemption to the extent necessary to permit the Partnerships to accept agreements from Partners and prospective Partners to become Partners and to be obligated with respect to capital commitments and additional capital contributions.

Section 18(i)

Applicant requests an exemption to the extent necessary to permit Partners to have only those voting rights that result from the Agreement.

Section 19 (a) and (b)

Applicant requests an exemption to the extent necessary to permit the Partnerships to make distributions (i) from any source without a written statement disclosing the source thereof other than the annual statements of each Partner's distribution share of income, gains, losses, credits and other items for Federal income tax purposes and the annual financial statements required by the Agreement, and (ii) more frequently than once every twelve months to the extent such distributions could reflect long-term capital gains.

Section 20(a)

Applicant believes the detailed disclosure and other requirements of section 20(a) are not necessary in the event it should desire or be required to seek consents or authorizations from its Partners.

Section 21(b)

Applicant requests an exemption to the extent necessary to permit the Partnerships to effect borrowings guaranteed by Partners to fund capital commitments of such Partners.

Section 23 (a), (b) and (c)

Applicant requests an exemption to the extent necessary to permit the Partnerships to fund the capital commitments of Partners through borrowings by the Partnerships guaranteed by Partners whose capital commitments are so funded and cause the partnership interest of a Partner in capital default to be purchased by another partner or Partners at the price, offered by such Partner or Partners in accordance with the Agreement. Applicant further requests an exemption to the extent necessary to permit the Partnerships to repurchase the Partnership interests of Partners who withdraw from the Partnerships in accordance with the terms of the Agreement.

Sections 30 (a), (b), and (d)

An exemption is requested to the extent necessary to exempt the Partnerships from filing periodic reports with the Commission. The pertinent information contained in such filings must, pursuant to the terms of the agreement, be sent to the Partners the only persons truly interested in such material.

Applicant agrees to file with the Commission, within 120 days after the end of the fiscal year of each

Partnership, a copy of the annual report of each Partnership required by the terms of the partnership agreement of each such Partnership to be sent to Partners. Applicant further requests that to the extent filings under section 30 are made by the Partnerships, such filings be afforded confidential treatment under section 45(a) of the Act.

Section 30(f)

Because Management Committee members and other persons may be deemed to be officers, directors or members of advisory boards of the Partnerships, this exemption is sought from the provisions of section 30(f) that would subject such persons to potential liability and the reporting requirements under section 16 of the Securities Exchange Act of 1934.

Section 31 (a) and (c)

Applicant requests an exemption to the extent necessary to permit the Partnerships to maintain only those accounts, books and other documents forming the basis for their financial statements as may be reasonably required for the preparation of annual financial statements and the audit thereof pursuant to generally accepted accounting principles and auditing practices and for the preparation of Federal and state income tax returns, to preserve such accounts, books and other documents only for such periods as the Management Committee determines are reasonably prudent and consistent with the reasons for which such documents are being maintained, and to prepare such financial statements in accordance with generally accepted accounting principles without following any special accounting rules prescribed by the Commission.

Section 32 (a) and (b)

Applicant requests an exemption to the extent necessary to permit the Partnerships to file with the Commission financial statements certified by independent accountants and prepared by a controller or other principal accounting officer or employee (or in the preparation of which such controller or officer of employee participated) of the Partnerships, which in such case have been selected or appointed by the Management Committee, without a vote of the Partners.

Section 34 (a) and (b)

Applicant requests an exemption to the extent the documents described therein are not required to be kept or maintained pursuant to the exemption sought above from certain provisions of section 31(a).

Applicant represents that these exemptions are necessary or relevant to the operations of the Partnerships as an investment program uniquely adapted to the needs of management members of McKinsey. The exemptions requested are necessary to control the investment activities of the Partnerships to ensure that the community of interest among all participants is maintained and to operate the Partnerships as contemplated. It is respectfully submitted that the protections provided in the sections of the Act from which exemptions have been requested are not necessary, appropriate or consistent with the protection of investors provided by the Act in view of the substantial community of interest among all the parties and the fact that each Partnership is an "employees' security company" as defined in section 2(a)(13) of the Act.

Notice is further given that any interested person wishing to request a hearing on the application may, not later than January 16, 1987, at 5:30 p.m., do so by submitting a written request setting forth the nature of his interest, the reasons for his request, and the specific issues, if any, of fact or law that are disputed, to the Secretary, Securities and Exchange Commission, Washington, DC 20549. A copy of the request should be served personally or by mail upon Applicant at the address stated above. Proof of service (by affidavit or, in the case of an attorney-at-law, by certificate) shall be filed with the request. After said date, an order disposing of the application will be issued unless the Commission orders a hearing upon request or upon its own motion.

For the Commission, by the Division of Investment Management, pursuant to delegated authority.

Jonathan G. Katz,

Secretary.

[FR Doc. 87-310 Filed 1-6-87; 8:45 am]

BILLING CODE 8010-01-M

DEPARTMENT OF STATE

[Public Notice No. 991]

El Paso, TX; Application for Bridge Permit

Notice is hereby given that the Department of State has received an amended application for a permit authorizing the replacement and expansion of the Zaragoza Bridge between El Paso, Texas and Ciudad Juarez, Chihuahua, Mexico. The application has been filed by the City of El Paso, Texas, which proposes that the existing Zaragosa Bridge be removed and replaced with a new bridge expected to consist of two four-lane sections with a walkway for pedestrian traffic. The existing bridge, located in the Ysleta area of El Paso, is owned and operated by the U.S. and Mexican Governments, through the International Boundary and Water Commission, U.S. and Mexico.

The Department's jurisdiction with respect to this application is based upon Executive Order 11423, dated August 16, 1968, and the International Bridge Act of 1972 (Pub. L. 92-434, 86 Stat. 731, 33 U.S.C. 535 approved September 26, 1972).

As required by E.O. 11423, the Department of State is circulating this application to concerned agencies for comment. In addition, the Bureau of Oceans, and International Environmental and Scientific Affairs of the Department of State is reviewing an assessment of the environmental effects of the proposal, which has been submitted as part of the application, in order to determine if an environmental impact statement will be required.

Interested persons may submit their views regarding this application in writing by February 6, 1987, to Mr. David H. Small, Assistant Legal Adviser for Economic, Business and Communications Affairs, Room 6420, Department of State, 2201 C Street, NW., Washington, DC 20520.

The application and related documents made part of the record to be considered by the Department of State in connection with this application are available for inspection and copying in the Office of the Assistant Legal Adviser for Economic, Business and Communications Affairs during normal business hours.

Any questions relating to this notice may be addressed to Mr. Small at the above address (202-647-5242) or to Mr. Jose E. Alvarez (202-647-7770).

Dated: December 18, 1986.

David H. Small,

Assistant Legal Adviser for Economic, Business and Communications Affairs.

[FR Doc. 87-211 Filed 1-6-87; 8:45 am]

BILLING CODE 4710-08-M

[Public Notice CM-8/1034]

Study Group C of the U.S. Organization for the International Telegraph and Telephone Consultative Committee (CCITT); Meeting

The Department of State announces that Study Group C of the U.S. Organization for the International

Telegraph and Telephone Consultative Committee (CCITT) will meet on January 22 in Reno, Nevada at Bally's MGM/Grand Hotel, Rialto Room, 2500 East Second Street, Reno, Nevada 89595, from 1:30 p.m. to 6:00 p.m. This meeting will have particular interest for those U.S Study Group C members concerned with CCITT Study Group XV's work in Fiber Optics.

This meeting is being held to discuss contributions and other preparations for the April 13 meeting of working party XV/5 and issues related to fiber optics.

Dated: December 23, 1986.

Earl S. Barbely,

Director, Office of Technical Standards and Development.

[FR Doc. 87-197 Filed 1-6-87; 8:45 am]

BILLING CODE 4710-07-M

DEPARTMENT OF TRANSPORTATION

Federal Aviation Administration

Advisory Circular: Substantiation for an Increase in Maximum Weight, Maximum Landing Weight, or Maximum Zero Fuel Weight

AGENCY: Federal Aviation Administration (FAA), DOT.

ACTION: Proposed Advisory Circular (AC) Notice of Availability and Request for Comments.

SUMMARY: This proposed AC provides information and guidance concerning compliance with Part 23 of the Federal Aviation Regulations (FAR) applicable to structural substantiation for an increase in maximum weight, maximum landing weight, or maximum zero fuel weight.

DATE: Commenters must identify File 23-7X; Subject: Substantiation for an Increase in Maximum Weight, Maximum Landing Weight, or Maximum Zero Fuel Weight, and comments must be received on or before April 7, 1987.

ADDRESS: Send all comments on the proposed AC to: Federal Aviation Administration, Attn.: Standards Office (ACE-110), 601 East 12th Street, Kansas City, Missouri 64106.

FOR FURTHER INFORMATION CONTACT: Mr. Joseph W. Burress, Aerospace Engineer, Standards Office (ACE-110), Aircraft Certification Division, Federal Aviation Administration, 601 East 12th Street, Kansas City, Missouri 64106; commercial telephone (816) 374-6941, or FTS 758-6941.

SUPPLEMENTARY INFORMATION: Any person may obtain a copy of this proposed AC by writing to: Federal Aviation Administration, Aircraft Certification Division, Standards Office (ACE-110), 601 East 12th Street, Kansas City, Missouri 64106.

Comments Invited

Interested parties are invited to submit comments on the proposed AC. The proposed AC and comments received may be inspected at the Standards Office (ACE-110), Room 1656, Federal Office Building, 601 East 12th Street, Kansas City, Missouri, between the hours of 7:30 a.m. and 4:00 p.m. weekdays, except Federal holidays.

Background

Due to changes in the operational requirements of an owner/operator, the need sometimes arises to modify and substantiate the structure for an increase in maximum weight, maximum landing weight, or maximum zero fuel weight. Any one of these increases affects the airplane basic loads and structural integrity and could affect the airplane's limitations and performance. The proposed AC provides information and guidance concerning acceptable means of compliance with Part 23 of the FAR applicable to structural substantiation for an increase in maximum weight, maximum landing weight, or maximum zero fuel weight. The proposed AC also emphasizes that such modifications should be investigated to verify that critical loads have not increased or that those loads which have increased are capable of being carried by the existing or modified structure.

Issued in Kansas City, Missouri, December 23, 1986.

Barry D. Clements,

Manager, Aircraft Certification Division.

[FR Doc. 87-238 Filed 1-6-87; 8:45 am]

BILLING CODE 4910-13-M

Flight Service Station at Ontario, California; Closing

Notice is hereby given that on or about December 24, 1986, the Flight Service Station at Ontario, California, will be closed. Services to the general aviation public of Ontario, formerly provided by this office, will be provided by the Flight Service Station in Riverside, California. This information will be reflected in the FAA Organization Statement the next time it is reissued.

(Sec. 313(a), 72 Stat. 752; 49 U.S.C. 1354.)

Issued in Lawndale, California, on December 23, 1986.

Jacqueline L. Smith,

Acting Director, Western-Pacific Region.

[FR Doc. 87-239 Filed 1-6-87; 8:45 am]

BILLING CODE 4910-13-M

Federal Highway Administration

Environmental Impact Statement; Hartford County, CT

AGENCY: Federal Highway Administration (FHWA), DOT.

ACTION: Notice of intent.

SUMMARY: The FHWA is issuing this notice to advise the public that an Environmental Impact Statement will be prepared for a proposed highway project in Hartford County, Connecticut.

FOR FURTHER INFORMATION CONTACT: James J. Barakos, Division Administrator, Federal Highway Administration, Abraham A. Ribicoff Federal Building, 450 Main Street, Room 635, Hartford, Connecticut 06103, Telephone (203) 722-2420; or James F. Byrnes, Jr., Director, Office of Environmental Planning, Connecticut Department of Transportation, 24 Wolcott Hill Road, Wethersfield, Connecticut 06109, Telephone (203) 566-5704.

SUPPLEMENTARY INFORMATION: The FHWA in cooperation with the Connecticut Department of Transportation (Department), will prepare an Environmental Impact Statement (EIS) on a proposal to construct the Prospect Street Bypass in the town of East Hartford in Hartford County, Connecticut. This proposal will involve the corridor determination for the construction of this bypass as a controlled access highway from the vicinity of Governor Street in East Hartford northerly, to the vicinity of the intersection of King Street and Ellington Road in East Hartford, Connecticut, a distance of about 1.75 miles. Construction of the corridor is considered desirable to accommodate existing and projected traffic demands and to divert a high volume of through traffic from local streets in East Hartford. Alternatives under consideration include: (1) Taking no action; (2) improving the existing street system; and (3) alternative highway alignments. This project, which would utilize a portion of the corridor for the formerly proposed Interstate 284, has an extensive history of coordination with Federal, state, local and regional agencies and organizations. In addition, public informational meetings

concerning traffic, engineering, environmental, social, economic and land use issues have been held. Information from the coordination effort and meetings has revealed that possible impacts to scenic areas, flood plains and wetlands will occur. Other potential impacts include the relocation of residents and businesses, stream crossings, railroad crossings and/or relocations, dike crossings and/or relocations and impacts on air quality and on fish and wildlife. Work on I-284 was halted in February 1983, and a concept program of substitute projects was developed which would be funded by the trade-in of I-284. The Prospect Street Bypass is included as part of this program. It is expected that the Bypass will have substantially less impact than the original I-284 proposal.

Since the full range of issues relating to this project is believed to have been identified, a scoping meeting is not planned at this time. The Advisory Council on Historic Preservation, the U.S. Fish and Wildlife Service, the Environmental Planning Agency and the Corps of Engineers will be asked to become cooperating agencies in the preparation of this EIS. In addition, appropriate Federal, state and local agencies will be requested to submit comments. Any reviewer wishing for a scoping meeting should contact the FHWA or the Department and one will be arranged. Other agencies, organizations and individuals interested in submitting comments or questions should contact the FHWA or the Connecticut Department of Transportation at the addresses provided above.

Issued on: December 30, 1986.

James J. Barakos,

Division Administrator, Hartford.

[FR Doc. 87-192 Filed 1-6-87; 8:45 am]

BILLING CODE 4910-22-M

National Highway Traffic Safety Administration

[Docket No. 79-17; Notice 33]

Optional New Car Assessment Program Testing by Manufacturers

AGENCY: National Highway Traffic Safety Administration (NHTSA), Department of Transportation.

ACTION: Extension of the comment period.

SUMMARY: In response to a request from the Automobile Importers of America, this notice grants a two week extension of the comment period on the notice proposing an optional New Car Assessment Program test program for manufacturers.

DATES: Comments must be submitted not later than January 19, 1987.

ADDRESS: Comments should refer to Docket 79-17, Notice 32 and be submitted to: Docket Section, Room 5109, National Highway Traffic Safety Administration, 400 Seventh Street, SW., Washington, DC 20590.

FOR FURTHER INFORMATION CONTACT: Mr. Charles Gauthier, Office of Market Incentives, National Highway Traffic Safety Administration. 400 Seventh Street, SW., Washington, DC 20590. Telephone (202) 366-4805.

SUPPLEMENTARY INFORMATION: On November 19, 1986 (51 FR 41888), NHTSA published a notice requesting comments on an optional New Car Assessment Program for vehicle manufacturers. On November 26, 1986, the Automobile Importers of America (AIA) asked the agency to extend the comment period by two weeks. AIA explained that domestic and foreign vehicle manufacturers will close for the holiday season on December 24th and will not resume business until after January 1, 1987. AIA said this will mean that manufacturers will have a shorter period of time in which to prepare their comments on the notice. AIA said that allowing two additional weeks will, in effect, provide manufacturers with the 45 day comment period intended by the agency. NHTSA recognizes that with the business closings during the holiday period, manufacturers may need additional time to prepare their comments and is thus granting a two week extension of the comment period.

Issued on: January 2, 1987.

Barry Felrice,

Associate Administrator for Rulemaking.

[FR Doc. 87-218 Filed 1-2-87; 12:35 pm]

BILLING CODE 4910-59-M

Petitions for Exemptions From the Vehicle Theft Prevention Standard; Volvo Cars of North America

AGENCY: National Highway Traffic Safety Administration (NHTSA), DOT.

ACTION: Grant of petition for exemption.

SUMMARY: This notice grants the petition by Volvo Cars of North America for an exemption from the marking requirements of the vehicle theft prevention standard for a 1988 passenger car line Volvo intends to introduce. The agency grants this exemption under section 605 of the Motor Vehicle Information and Cost Savings Act. The agency has determined that the antitheft device which the petitioner intends to install on this line as standard equipment is likely to be as effective in reducing and deterring motor vehicle theft as would compliance with the parts marking requirements of the standard. NHTSA has decided to grant Volvo's request that we treat the name plate of this new car line as confidential information until the manufacturer introduces the product line.

DATE: The exemption granted by this notice will become effective beginning with the 1988 model year.

SUPPLEMENTARY INFORMATION: On September 5, 1986, this agency received a petition from Volvo Cars of North America (Volvo) for an exemption from the parts marking requirements of the vehicle theft prevention standard (49 CFR Part 541), pursuant to the requirements of 49 CFR Part 543, *Petitions for Exemption from the Vehicle Theft Prevention Standard.* On January 7, 1986 (51 FR 715), NHTSA published a notice of proposed rulemaking for the procedures to be followed by manufacturers in preparing and submitting petitions for model year 1988 and thereafter. These proposed procedures were identical to those adopted in the interim final rule (January 7, 1986, 51 FR 706) establishing the Part 543 requirements to be followed by manufacturers in preparing and submitting petitions for exemption during model year 1987. Section 605 of Title VI requires manufacturers to submit petitions not later than eight months before commencement of production of the vehicle line or lines for which exemption is sought. Volvo submitted its petition before publication of the final rule for the 1988 and subsequent model years.

The agency reviewed the material Volvo submitted and concluded that the company met the requirements for petitions in Part 543.5, as of September 5, the date on which NHTSA received the Volvo petition, and on which the 120-day period for processing Volvo's petition began. The agency further decided to grant the company's request under 49 CFR Part 512 to treat the name plate of the product line, and detailed design specifications as confidential business information.

In its petition, Volvo described an antitheft system that is activated by locking either the driver or passenger door with the ignition key. These steps activate the starter interrupt function and also arm an audible alarm. The alarm is triggered by sensors in the doors, hatch, and hood.

Based on substantial evidence, the Agency has determined that installing

Volvo's device in this new car line is likely to be as effective in reducing and deterring vehicle theft as are the Part 541 marking requirements. This determination is based on the information Volvo submitted with its petition and on other available information. The agency believes that the device will provide the types of performance listed in § 543.6(a)(2), i.e., promote activation, attract attention to unauthorized entries, prevent defeating or circumventing of the device by unauthorized persons, prevent operation of the vehicle by unauthorized entrants, and ensure the reliability and durability of the device.

As required by section 605(b) of the statute and § 543.6(b), the agency also finds that Volvo has provided adequate reasons for its belief that the antitheft device will reduce and deter theft. This conclusion is based on the information Volvo provided on its device. The agency notes also that the methods of encouraging use and preventing defeat of the Volvo antitheft device are similar to the methods of other devices that the agency has considered effective. Volvo stated in its petition that it believes its antitheft device will reduce and deter theft at least to the same extent as complying with Part 541 would.

The agency notes that the limited and apparently conflicting data on the effectiveness of the pre-standard parts marking programs make it difficult at this early stage of the theft standard's implementation to compare the effectiveness of an antitheft device with the effectiveness of compliance with the theft prevention standard. The statute clearly requires such a comparison, which the agency has made on the basis of the limited data available.

NHTSA notes that if Volvo wishes in the future to modify the device on which this exemption is based, the company may have to submit a petition to modify the exemption. Section 543.7(c) states that a Part 543 exemption applies only to vehicles that belong to a line exempted under this Part and equipped with the antitheft device on which the line's exemption was based. Further, § 543.9(b)(2) provides for the submission of petitions "(t)o modify an exemption to permit the use of an antitheft device similar to but differing from the one specified in that exemption."

The agency wishes to minimize the administrative burden which § 543.9(b)(2) could place on exempted vehicle manufacturers and itself. The agency did not intend in drafting Part 543 to require the submission of a modification petition for every change in the components or design of an antitheft device. The significance of many such changes could be *de minimis*. Therefore, NHTSA suggests that if Volvo contemplates making any changes the effects of which might be characterized as *de minimis*, then the company should consult the Agency before preparing and submitting a petition to modify.

(15 U.S.C. 2025, delegation of authority at 49 CFR 1.50)

Issued on: January 2, 1987.

Jeffrey R. Miller,

Acting Administrator.

[FR Doc. 87-219 Filed 1-2-87; 12:35 pm]

BILLING CODE 4910-59-M

DEPARTMENT OF THE TREASURY

Public Information Collection Requirements Submitted to OMB for Review

Dated: December 30, 1986.

The Department of the Treasury has submitted the following public information collection requirement(s) to OMB for review and clearance under the Paperwork Reduction Act of 1980, Pub. L. 96-511. Copies of the submission(s) may be obtained by calling the Treasury Bureau Clearance Officer listed. Comments regarding these information collections should be addressed to the OMB reviewer listed and to the Treasury Department Clearance Officer, Room 7313, 1201 Constitution Avenue, NW., Washington, DC 20220.

Internal Revenue Service

OMB Number: 1545-0702

Form Number: IRS Form 8023

Type of Review: Revision

Title: Corporate Qualified Stock Purchase Elections

OMB Number: 1545-0971

Form Number: IRS Form 1041-ES

Type of Review: Revision

Title: Estimated Income Tax for Fiduciaries

Clearance Officer: Garrick Shear (202) 566-6150, Room 5571, 1111 Constitution Avenue, NW., Washington, DC 20224.

OMB Reviewer: Milo Sunderhauf (202) 395-6880, Office of Management and Budget, Room 3208, New Executive Office Building, Washington, DC 20503.

Douglas J. Colley,

Departmental Reports Management Office.

[FR Doc. 87-201 Filed 1-6-87; 8:45 am]

BILLING CODE 4810-25-M

Fiscal Service

Renegotiation Board Interest Rate; Prompt Payment Interest Rate

The Renegotiation Board previously published the rate of interest determined by the Secretary of the Treasury pursuant to section 105(b)(2) of the Renegotiation Act of 1951, as amended. Since the Renegotiation Board is no longer in existence, the Department of the Treasury is publishing the current rate of interest. Also, pursuant to section 2(b)(1) of Pub. L. 97-177, dated May 21, 1982, the Secretary of the Treasury is responsible for computing and publishing the interest rate to be used in cases under the Prompt Payment Act.

Therefore, notice is hereby given that, pursuant to the above mentioned sections, the Secretary of the Treasury has determined that the rate of interest applicable for the purpose of said sections, for the period beginning January 1, 1987 and ending on June 30, 1987, is 7% per centum per annum.

Dated: December 23, 1986.

Gerald Murphy,

Fiscal Assistant Secretary.

[FR Doc. 87-245 Filed 1-6-87; 8:45 am]

BILLING CODE 4810-35-M

Corrections

Federal Register
Vol. 52, No. 4
Wednesday, January 7, 1987

This section of the FEDERAL REGISTER contains editorial corrections of previously published Rule, Proposed Rule, and Notice documents and volumes of the Code of Federal Regulations. These corrections are prepared by the Office of the Federal Register. Agency prepared corrections are issued as signed documents and appear in the appropriate document categories elsewhere in the issue.

DEPARTMENT OF COMMERCE

International Trade Administration

Masters, Mates and Pilots MATES Program; Decision for Duty-Free Entry of Scientific Instrument; Correction

Correction

In notice document 86–28995 appearing on page 46892 in the issue of Monday, December 29, 1986, make the following correction:

In the second paragraph, in the third line, "31°" should read "310°".

BILLING CODE 1505-01-D

ENVIRONMENTAL PROTECTION AGENCY

[OPTS-59798; FRL 3132-2]

Office of Pesticides and Toxic Substances; Certain Chemicals Premanufacture Notices

Correction

In notice document 86–28748 beginning on page 45940 in the issue of Tuesday, December 23, 1986, make the following correction:

On page 45940, in the third column, under **DATES**, after "Y 87–60" add "and Y 87–61".

BILLING CODE 1505-01-D

FEDERAL TRADE COMMISSION

16 CFR Part 13

[Docket No. 9189]

Detroit Auto Dealers Association, Inc., et al.; Prohibited Trade Practices, and Affirmative Corrective Actions

Correction

In rule document 86–28839 beginning on page 46615 in the issue of Wednesday, December 24, 1986, make the following corrections:

1. On page 46615, in the third column, in the **SUMMARY**, in the fifth line, "Committee" should be removed.

2. On page 46616, in the first column, the second line should read "advertise vehicle prices at all.".

3. On the same page, in the second column, the **Subpart** heading should not have appeared in bold type and should have read as follows: "Subpart--Disseminating Advertisements, etc.: § 13.1043, Disseminating advertisements, etc.".

BILLING CODE 1505-01-D

GENERAL SERVICES ADMINISTRATION

41 CFR Part 201-24

[FIRMR Temp. Reg. 13]

Temporary Implementation of Title VIII, Paperwork Reduction Reauthorization Act of 1986, Pub. L. 99-500 Regarding Automatic Data Processing Equipment

Correction

In rule document 86–28752 beginning on page 45887 in the issue of Tuesday, December 23, 1986, make the following corrections:

PART 201-24—[AMENDED]

1. On page 45888, in the first column, the part heading should read as set forth above.

§201-24.202 [Amended]

2. On the same page, in the same column, the section heading should read as set forth above.

BILLING CODE 1505-01-D

DEPARTMENT OF HEALTH AND HUMAN SERVICES

Food and Drug Administration

21 CFR Part 874

[Docket No. 86N-0010]

Ear, Nose, and Throat Devices; Proposed Exemptions From Premarket Notification

Correction

In proposed rule document 86–25093 beginning on page 40394 in the issue of Thursday, November 6, 1986, make the following corrections:

1. On page 40394, in the first column, in the **SUMMARY**, in the fifth line, "for" should read "four".

§ 874.9 [Corrected]

2. On page 40395, in the introductory text of § 874.9, in the third column, in the eighth line, "manufactures" should read "manufacturers".

BILLING CODE 1505-01-D

DEPARTMENT OF HEALTH AND HUMAN SERVICES

Food and Drug Administration

21 CFR Parts 874, 878, and 886

[Docket No. 78N-1566 et al.]

Medical Devices; Withdrawal of Certain Proposed Rules for Device Classification

Correction

In proposed rule document 86–25092 beginning on page 40396 in the issue of Thursday, November 6, 1986, make the following corrections:

On page 40396, in the third column, in the table, in the heading, in the first column, "regulations" was misspelled; in the seventh entry, "Laryngeal" was misspelled.

BILLING CODE 1505-01-D

DEPARTMENT OF TRANSPORTATION

Federal Aviation Administration

14 CFR Parts 21 and 23

[Docket No. 012CE, Special Conditions No. 23-ACE-11]

Special Conditions; Beech Model 2000 Series Airplanes

Correction

In rule document 86–17837 beginning on page 28509 in the issue of Friday, August 8, 1986, make the following correction:

On page 28523, in the second column, in the table at the top of the page, in the second line of text, in the last column, the "+"before the "39" should have been "–".

BILLING CODE 1505-01-D

federal register

Wednesday
January 7, 1987

Part II

Department of Energy

10 CFR Part 503

Powerplant and Industrial Fuel Use; New Facilities Exemptions; Interim Rule

Compliance With the National Environmental Policy Act Amendments to the DOE Guidelines; Notice

DEPARTMENT OF ENERGY

10 CFR Part 503

[Docket No. ERA-C&E 86-35]

Powerplant and Industrial Fuel Use; New Facilities Exemptions

AGENCY: Department of Energy.

ACTION: Affirmation of interim rule.

SUMMARY: The Department of Energy (DOE) is amending its final rules governing the cogeneration exemption under the Powerplant and Industrial Fuel Use Act of 1978 ("FUA" or "the Act") (46 FR 59872, 59914, December 7, 1981, as amended at 47 FR 29209, July 6, 1982) ("final rules"). The amendment modifies § 503.13(b) of the final rules by adding the cogeneration exemption to the list of exemption types available using an environmental checklist in lieu of more detailed environmental documentation. This change was issued as an interim rule in the **Federal Register** of May 22, 1986 (51 FR 18866).

EFFECTIVE DATE: Effective January 7, 1987.

FOR FURTHER INFORMATION CONTACT:

Richard Ransom, Department of Energy, Economic Regulatory Administration, Coal and Electricity Division, Room GA-045, Forrestal Building, 1000 Independence Avenue, SW., Washington, DC 20585, Telephone (202) 586-4811;

or

Henry K. Garson, Esq., Department of Energy, Office of General Counsel, Room 6A-113, Forrestal Building, 1000 Independence Avenue, SW., Washington, DC 20585, Telephone (202) 586-6947.

SUPPLEMENTARY INFORMATION: On May 22, 1986, the Department of Energy (DOE) published in the **Federal Register** (51 FR 18866) an interim change to the FUA final rules by adding the cogeneration exemption to the list of exemption types available using an environmental checklist.

Publication of this interim rule commenced a 30-day comment period during which public comment was invited. No timely comments were received. The DOE has however elected to address one late comment in which the commentor contended that DOE has not presented any evidence to justify the categorical exclusion for cogeneration facilities. The commentor further maintained that the categorical exclusion gives unjustifiable preferential treatment to petitioners seeking cogeneration exemptions as compared to those seeking other types of exemptions for their powerplants.

As discussed in more detail in a notice document published in this separate part, DOE believes that experience is the most reliable basis for determining whether a class of action normally does not require further National Environmental Policy Act (NEPA) documentation and can be categorically excluded. As noted in the DOE NEPA Guidelines modification proposal (51 FR 18867) none of the 96 cogeneration exemptions granted to date have required either an EIS or an EA. DOE also disagrees that the addition of the cogeneration exemption to the list of exemption types using the environmental checklist improperly differentiates between types of exemptions. Paragraph A.3.d. of DOE's Guidelines clearly states that further additions to the categories may occur as experience is gained during implementation. When sufficient experience is gained with other types of powerplant exemptions, they will be considered for categorical exclusions also.

List of Subjects in 10 CFR Part 503

Business and industry, Electric power plants, Energy conservation, Natural gas, Petroleum, Reporting and recordkeeping requirements.

Issued in Washington, DC on December 22, 1986.

Marshall A. Staunton,

Administrator, Economic Regulatory Administration.

Therefore, the DOE is adopting the interim amendment as a final rule. For the convenience of the reader, the amendment is republished as set forth below.

PART 503—[AMENDED]

10 CFR Part 503 is amended as follows:

1. The authority citation for Part 503 continues to read as follows:

Authority: Department of Energy Organization Act, Pub. L. 95-91, 91 Stat. 565 (42 U.S.C. 7101 et seq.); Powerplant and Industrial Fuel Use Act of 1978, Pub. L. 95-620, 92 Stat. 3289 (42 U.S.C. 8301 et seq.); Energy Security Act, Pub. L. 96-294, 94 Stat. 611 (42 U.S.C. 8701); E.O. 12009, 42 FR 46267, Sept. 15, 1977.

§ 503.13 [Amended]

2. Inserting "cogeneration," after "emergency purposes," in § 503.13(b) introductory text.

[FR Doc. 87-164 Filed 1-6-87; 8:45 am]

BILLING CODE 6450-01-M

DEPARTMENT OF ENERGY

Compliance With the National Environmental Policy Act (NEPA) Amendments to the DOE NEPA Guidelines

AGENCY: Department of Energy.

ACTION: Notice of amendments to the Department of Energy's NEPA guidelines.

SUMMARY: The Department of Energy herewith amends Section D of its NEPA guidelines by adding the permanent cogeneration exemption authorized under Title II of the Fuel Use Act to its list of categorical exclusions. A categorical exclusion is a class of DOE action which normally does not require the preparation of either an environmental impact statement (EIS) or environmental assessment (EA).

DATES: Effective January 7, 1987.

FOR FURTHER INFORMATION CONTACT:

Carol Borgstrom, Acting Director, Office of NEPA Project Assistance, EH-25, U.S. Department of Energy, 1000 Independence Avenue, SW., Rm. 3G-092, Washington, DC 20585, (202) 586-4600.

Henry Garson, Esq., Assistant General Counsel for Environment, GC-11, U.S. Department of Energy, 1000 Independence Avenue, SW., Rm. 6A-113, Washington, DC 20585, (202) 586-6947.

SUPPLEMENTARY INFORMATION: On May 22, 1986, the Department of Energy (DOE) published in the **Federal Register** (51 FR 18867) a notice of a proposed change to Section D of its National Environmental Policy Act (NEPA) Guidelines by adding the permanent cogeneration exemption authorized under Title II of the Fuel Use Act to its list of categorical exclusions.

Publication of this notice commenced a 30-day comment period during which public comment was invited. No timely comments were received. The DOE has elected to address the one late comment received in which the commentor contended that DOE has not presented any evidence to justify the categorical exclusion for cogeneration facilities. The commentor disagreed with DOE's analysis and conclusion that cogeneration facilities typically do not result in significant environmental impacts. The commentor states that "[t]his picture of cogeneration ignores the wide disparity in both the design of cogeneration facilities and the relative concentration of cogeneration sites within a specific region. * * * Not only the cogeneration facility, but also the industrial facilities they are associated with are quite varied in design and, consequently, varied in their environmental effects."

The commentor further maintained that the categorical exclusion gives unjustifiable preferential treatment to petitioners seeking cogeneration systems as compared to those seeking other types of exemptions for their powerplants.

This comment misunderstands the basic nature of the categorical exclusion process under NEPA. The Council on Environmental Quality regulations implementing NEPA authorize Federal agencies to identify those classes of actions which *normally* do not require either an environmental impact statement (EIS) or an environmental assessment (EA) (see 40 CFR 1507.3(b)(2)). These may be categorically excluded from NEPA documentation (40 CFR 1500.4). DOE has identified these classes of actions in Section D of its Guidelines. 40 CFR 1507(c) requires agencies to put in place procedures to assure that individual actions properly fall under the basis for the categorical exclusion. DOE established such procedures in paragraphs A.3.b.2. and 3. of its Guidelines, which provide that: (1) DOE will review individual proposed actions to determine if it is appropriate for the categorical exclusion to apply, and (2) further NEPA review will be conducted for those individual actions when public comment raises a substantial question regarding the categorization. These requirements are implemented for Fuel Use Act exemptions at 10 CFR 503.13(b), which require petitioners to certify that all environmental permits will be obtained, and to complete an "environmental checklist" concerning sensitive environmental concerns, and in the Notice of Acceptance of the petition, which invites public comment on the categorical exclusion for the facility. Thus, DOE has put in place procedures to create a presumption that all actions in a class require neither an EIS or EA, and to rebut it in individual cases.

DOE believes that experience is the most reliable basis for determining whether a class of action normally does not require further NEPA documentation and can be categorically excluded. As noted in the Guidelines modification proposal, none of the 96 cogeneration exceptions granted to date have required either an EIS or an EA. The proposed amendment briefly summarized the nature of the environmental data and information which DOE analyzed in each of the cases to reach the conclusion that no significant impacts would occur. Contrary to the inference contained in the comment, each analysis was performed using the fuel most likely to cause significant environmental impacts (either oil or natural gas) which the facility would be allowed to burn under the terms of its environmental permits.

DOE believes that this consistent history of performance is a sufficient basis to raise the rebuttable presumption necessary to establish a categorical exclusion. The environmental checklist and certification that all environmental permits will be obtained, coupled with the opportunity for public comment on the Notice of Acceptance of the exemption petition, provides adequate assurance that each action will be sufficiently scrutinized to determine if it correctly falls within the categorical exclusion.

Finally, DOE disagrees that this procedure improperly differentiates between types of exemptions. Paragraph A.3.d. of DOE's Guidelines clearly states that further additions to the categories may occur as experience is gained during implementation. When sufficient experience is gained with other types of powerplant exemptions, they will be considered for categorical exclusions also.

DOE has consulted with the Council on Environmental Quality (CEQ) regarding this categorical exclusion, in accordance with 40 CFR 1507.3. CEQ had no objection to the proposed amendment. Therefore, DOE has adopted this amendment to Section D of its NEPA guidelines, effective immediately.

Issued in Washington, DC on December 22, 1986.

Mary L. Walker,

Assistant Secretary, Environment, Safety and Health.

[FR Doc. 87-163 Filed 1-6-87; 8:45 am]

BILLING CODE 6540-01-M

Reader Aids

Federal Register

Vol. 52, No. 4

Wednesday, January 7, 1987

INFORMATION AND ASSISTANCE

SUBSCRIPTIONS AND ORDERS

Subscriptions (public)	202-783-3238
Problems with subscriptions	275-3054
Subscriptions (Federal agencies)	523-5240
Single copies, back copies of FR	783-3238
Magnetic tapes of FR, CFR volumes	275-1184
Public laws (Slip laws)	275-3030

PUBLICATIONS AND SERVICES

Daily Federal Register

General information, index, and finding aids	523-5227
Public inspection desk	523-5215
Corrections	523-5237
Document drafting information	523-5237
Legal staff	523-4534
Machine readable documents, specifications	523-3408

Code of Federal Regulations

General information, index, and finding aids	523-5227
Printing schedules and pricing information	523-3419

Laws	523-5230

Presidential Documents

Executive orders and proclamations	523-5230
Public Papers of the President	523-5230
Weekly Compilation of Presidential Documents	523-5230

United States Government Manual	523-5230

Other Services

Library	523-5240
Privacy Act Compilation	523-4534
TDD for the deaf	523-5229

FEDERAL REGISTER PAGES AND DATES, JANUARY

1-228 2
229-388 5
389-516 6
517-660 7

CFR PARTS AFFECTED DURING JANUARY

At the end of each month, the Office of the Federal Register publishes separately a List of CFR Sections Affected (LSA), which lists parts and sections affected by documents published since the revision date of each title.

3 CFR

Executive orders:
12462 (Amended by EO 12579) 515
12496 (Superseded by EO 12578) 505
12578 505
12579 515
Proclamations:
5595 229
Administrative Orders:
Memorandums:
December 30, 1986 ..... 231, 233
Jan. 2, 1987 389

5 CFR

534 1
890 2

7 CFR

2 235
907 240
910 241
1036 241
1944 243
1951 243
Proposed Rules:
301 291
318 292
925 432
944 432
1930 296

8 CFR

103 3

9 CFR

307 3
318 5
350 3
351 3
354 3
355 3
362 3
381 3

10 CFR

61 397
503 658
Proposed Rules:
50 543

12 CFR

Proposed Rules:
225 543
563 80

13 CFR

121 397

14 CFR

21 656
23 656
39 517-523
71 ..... 524, 525
Proposed Rules:
39 ..... 435, 551-557
71 ..... 81, 297, 558-560

15 CFR

22 6
399 405

16 CFR

13 ..... 253, 254, 656
1034 405
1750 405

18 CFR

2 9
37 11
Proposed Rules:
11 82

19 CFR

4 254
24 255

20 CFR

364 526

21 CFR

176 527
178 406
558 530
Proposed Rules:
874 656
878 656
886 656

23 CFR

Proposed Rules:
658 298

25 CFR

256 38
272 38

26 CFR

1 ..... 39, 40, 409, 409
602 40
Proposed Rules:
1 ..... 83, 438

27 CFR

19 530
25 530
240 530
250 530
251 530
270 530
275 530
285 530

28 CFR
51 486

29 CFR
1601 42
2644 256
Proposed Rules:
2520 84

30 CFR
925 534
Proposed Rules:
935 561

31 CFR
5 43-51
51 414

32 CFR
Proposed Rules:
230 90

33 CFR
Proposed Rules:
110 90

38 CFR
Proposed Rules:
13 300

39 CFR
Proposed Rules:
960 301

40 CFR
52 ..... 53, 54
80 257
81 54
Proposed Rules:
52 91
65 562
180 563
228 438
704 107
721 107

41 CFR
101-40 387
201-24 656

43 CFR
3400 415
3470 415
Proposed Rules:
426 304

44 CFR
Proposed Rules:
6 304
61 112

45 CFR
30 260
201 273
304 273
801 416

47 CFR
1 273
2 417
15 417
22 417
25 417
65 273
73 ..... 57, 58, 275-277
90 417
97 ..... 277, 278
Proposed Rules:
73 ..... 113-115, 305

48 CFR
525 ..... 58, 278
552 278
810 280
836 280
852 280
Proposed Rules:
52 226

49 CFR
544 59
1312 536
Proposed Rules:
1312 564

50 CFR
17 283
611 ..... 417, 422
642 288
655 537
672 422
675 422
Proposed Rules:
17 306
23 309
611 198
672 198
675 198
681 442

LIST OF PUBLIC LAWS

Note: The listing of public laws enacted during the second session of the 99th Congress has been completed.

Last listing: November 20, 1986.

The listing will be resumed when bills are enacted into public law during the first session of the 100th Congress which convenes on January 6, 1987.