9-23-87
Vol. 52 No. 184
Pages 35679-35904

federal register

Wednesday
September 23, 1987

FEDERAL REGISTER Published daily, Monday through Friday, (not published on Saturdays, Sundays, or on official holidays), by the Office of the Federal Register, National Archives and Records Administration, Washington, DC 20408, under the Federal Register Act (49 Stat. 500, as amended; 44 U.S.C. Ch. 15) and the regulations of the Administrative Committee of the Federal Register (1 CFR Ch. I). Distribution is made only by the Superintendent of Documents, U.S. Government Printing Office, Washington, DC 20402.

The **Federal Register** provides a uniform system for making available to the public regulations and legal notices issued by Federal agencies. These include Presidential proclamations and Executive Orders and Federal agency documents having general applicability and legal effect, documents required to be published by act of Congress and other Federal agency documents of public interest. Documents are on file for public inspection in the Office of the Federal Register the day before they are published, unless earlier filing is requested by the issuing agency.

The **Federal Register** will be furnished by mail to subscribers for $340.00 per year, or $170.00 for 6 months, payable in advance. The charge for individual copies is $1.50 for each issue, or $1.50 for each group of pages as actually bound. Remit check or money order, made payable to the Superintendent of Documents, U.S. Government Printing Office, Washington, DC 20402.

There are no restrictions on the republication of material appearing in the **Federal Register.**

Questions and requests for specific information may be directed to the telephone numbers listed under INFORMATION AND ASSISTANCE in the READER AIDS section of this issue.

How To Cite This Publication: Use the volume number and the page number. Example: 52 FR 12345.

Contents

Federal Register
Vol. 52, No. 184
Wednesday, September 23, 1987

Agricultural Marketing Service
RULES
Livestock; grading, certification, and standards:
Slaughter cattle and carcass beef, 35679

Agriculture Department
See also Agricultural Marketing Service; Federal Grain Inspection Service; Soil Conservation Service
NOTICES
Agency information collection activities under OMB review, 35749

Army Department
See Engineers Corps

Commerce Department
See International Trade Administration; National Oceanic and Atmospheric Administration

Commodity Futures Trading Commission
NOTICES
Meetings:
CFTC-State Cooperation Advisory Committee, 35753

Conservation and Renewable Energy Office
NOTICES
Consumer product test procedures; waiver petitions:
Trane Co., 35757

Consumer Product Safety Commission
NOTICES
Meetings; Sunshine Act, 35835

Defense Department
See also Defense Mapping Agency; Engineers Corps
NOTICES
Meetings:
Science Board task forces, 35755
(2 documents)
Privacy Act; systems of records, 35754

Defense Mapping Agency
NOTICES
Environmental statements; availability, etc.:
DMA Reston Center, 35755

Economic Regulatory Administration
NOTICES
Consent orders:
Carlson Co., Inc., et al., 35762

Education Department
NOTICES
Grants; availability, etc.:
Pell grant program
Zero Student Aid Index charts; availability, 35868
Perkins loan, College work-study, supplemental educational opportunity grant, and guaranteed student loan programs—
Systems of need analysis, etc., 35902
Postsecondary education improvement fund—
Comprehensive program, 35756

Employment Policy, National Commission
See National Commission for Employment Policy

Energy Department
See also Conservation and Renewable Energy Office; Economic Regulatory Administration; Energy Information Administration; Federal Energy Regulatory Commission
NOTICES
Meetings:
International Energy Agency Industry Advisory Board, 35756

Energy Information Administration
NOTICES
Agency information collection activities under OMB review, 35763

Engineers Corps
RULES
Ability to pay provision; flood control cost sharing requirements, 35872

Environmental Protection Agency
RULES
Air quality implementation plans; approval and promulgation; various States:
Florida, 35703
Mississippi, 35704
Hazardous waste:
Hazardous waste generators (100 to 1000 kilograms per month)—
Small quantity generators; exception reporting, 35894
Pesticides; tolerances in food, animal feeds, and raw agricultural commodities:
Bromoxynil, 35705
Toxic substances:
Testing requirements—
Propylene oxide, 35706
PROPOSED RULES
Hazardous waste:
Treatment, storage, and disposal facilities—
Permit modifications, 35838
Pesticides; tolerances in food, animal feeds, and raw agricultural commodities:
Methomyl, 35730
NOTICES
Pesticide programs:
Pesticide assessment guidelines—
Date reporting addenda, 35766
Pesticide registration, cancellation, etc.:
Ciba-Geigy Corp.; correction, 35836
Superfund program:
State Capacity Assurance Project; National Governors Association workgroups, 35767

Federal Aviation Administration
RULES
Airworthiness directives:
Beech, 35683
Cessna, 35689
Jet routes, 35693, 35694
(3 documents)

CFR PARTS AFFECTED IN THIS ISSUE

A cumulative list of the parts affected this month can be found in the Reader Aids section at the end of this issue.

5 CFR
Proposed Rules:
1260 35722
1261 35722

7 CFR
53 35679
54 35679

12 CFR
221 35683
Proposed Rules:
332 35724

14 CFR
39 (2 documents) 35683, 35689
75 (3 documents) 35693, 35694
Proposed Rules:
39 (4 documents) 35725–35729

18 CFR
35 35695

20 CFR
416 35836

21 CFR
Proposed Rules:
193 35730

25 CFR
211 35702
212 35702
225 35702

29 CFR
2582 35864
Proposed Rules:
1910 35731
1915 35731
1917 35731
1918 35731

30 CFR
Proposed Rules:
914 (2 documents) 35733, 35734
934 35735

33 CFR
241 35872

40 CFR
52 (2 documents) 35703, 35704
180 35705
262 35894
271 35894
799 35706
Proposed Rules:
124 35838
264 35838
270 35838

41 CFR
Proposed Rules:
201-21 35736
201-23 35736
201-38 35736
201-39 35736
201-41 35736

47 CFR
Proposed Rules:
1 35737
73 35737

49 CFR
571 35709
Proposed Rules:
571 (2 documents) 35740, 35741

50 CFR
26 35710
604 35717
641 35717
642 35720
672 35721
Proposed Rules:
23 (2 documents) 35741, 35743

Rules and Regulations

Federal Register
Vol. 52, No. 184
Wednesday, September 23, 1987

This section of the FEDERAL REGISTER contains regulatory documents having general applicability and legal effect, most of which are keyed to and codified in the Code of Federal Regulations, which is published under 50 titles pursuant to 44 U.S.C. 1510.
The Code of Federal Regulations is sold by the Superintendent of Documents. Prices of new books are listed in the first FEDERAL REGISTER issue of each week.

DEPARTMENT OF AGRICULTURE

Agricultural Marketing Service

7 CFR Parts 53 and 54

Standards for Grades of Slaughter Cattle and Standards for Grades of Carcass Beef

AGENCY: Agricultural Marketing Service (AMS), USDA.

ACTION: Final rule.

SUMMARY: This final rule revises certain official U.S. regulations and standards for carcass beef and the related standards for grades of slaughter cattle. The changes provide for the renaming of the U.S. Good grades of carcass beef and slaughter cattle as U.S. Select. The changes will provide the industry with an opportunity, through the use of a more positive grade name, for improved marketing of beef with less marbling than Prime or Choice. The changes should also provide consumers who desire beef having the atrributes of Select with an officially graded product as an alternative to the Prime and Choice grades. The changes should improve the effectiveness of the standards in meeting the needs of users of the system. These revisions are the same as those proposed in the March 4, 1987, **Federal Register** (52 FR 6577).

EFFECTIVE DATE: November 23, 1987.

FOR FURTHER INFORMATION CONTACT: Dr. Michael L. May, Chief, Standardization and Review Branch, Livestock and Seed Division, Agricultural Marketing Service, U.S. Department of Agriculture, 14th and Independence Avenues SW., Washington, DC 20250, 202–447–4486.

SUPPLEMENTARY INFORMATION:

Executive Order 12291

This final rule which revises the beef carcass (7 CFR Part 54) and slaughter cattle (7 CFR Part 53) standards has been reviewed under USDA procedures established to implement Executive Order 12291 and Departmental Regulation No. 1512–1 and was thereby classified as a non-major rule pursuant to sections 1(b) (1), (2), and (3) of that order because (1) it would not have an annual effect on the economy of $100 million or more, (2) it would not result in a major increase in costs or prices for consumers, individual industries, Federal, State, or local government agencies, or geographic regions; and (3) it would not have significant adverse effects on competition, employment, investment, productivity, innovation, or on the ability of United States-based enterprises to compete with foreign-based enterprises in domestic or export markets. Accordingly, a regulatory impact analysis is not required.

Effect on Small Entities

This action was reviewed under the Regulatory Flexibility Act (RFA) (5 U.S.C. 601 *et seq.*). The Administrator of the Agricultural Marketing Service has determined that this action will not have a significant economic impact on a substantial number of small entities as defined by the RFA because the revisions only change the nomenclature of the Good grade name to Select. Further, the beef grades are applied equally to all size entities covered by these regulations, and the use of grades is voluntary.

Background

The Federal grading of meat is a voluntary service, provided under the Agricultural Marketing Act of 1946, as amended (7 U.S.C. 1621 *et seq.*), which is designed to facilitate the marketing of livestock and meat. In order to facilitate marketing, grades divide the population of cattle or beef into uniform groups (of similar quality, yield, value, etc.). Grades provide a simple, effective means of describing product that is easily understood by both buyers and sellers. By identifying different segments of the commodity, grades enable buyers and consumers to obtain that particular portion of the entire range that best meets their individual needs. At the same time, grades are also important in transmitting information on the desires of consumers to cattlemen so that better informed production decisions can be made. Market preference for a particular grade or grades is communicated to cattle producers, so they can adjust production toward that particular demand.

Public Voice Petition

Public Voice for Food and Health Policy, a non-profit consumer, research, education, and advocacy organization, petitioned the Department of Agriculture (USDA) in June 1986 to amend the beef grade standards. Stating that the "Good" beef grade is leaner than "Prime" or "Choice" and "may not be less desirable, as the current name suggests, to persons who put a premium on nutrition," the petition asked USDA to change the name of the "Good" beef grade to "Select." The Public Voice petition suggested that consumers who would like to purchase leaner beef are being hurt by the disincentive of the "Good" name.

The petition further stated that because many people do not realize that Federal quality grades refer only to taste and not nutritional value, the petition declared that grades strongly imply that beef with a "Choice" label is preferable to the leaner grade of beef, whether that beef is ungraded or labeled "Good." In addition, the petition asserted that store "lean" brands cannot substitute for a Federal grade ensuring leanness because they do not come with the imprimatur of impartial, accurate Federal grades. The Public Voice petition also indicated that since supermarket grades have no relationship to official Federal classifications, such grades are not dependably consistent among different supermarket chains.

The petition concluded that the discrimination against leaner beef inherent in the nomenclature of the Federal grading system should be eliminated. Therefore, Public Voice proposed that the strong confidence consumers have in the Federal beef grades should be maximized for the benefit of the public's health with a name change to indicate that the "Good" grade is no less desirable than "Prime" or "Choice." This organization suggested the name "Select" because it conveys appeal and desirability and is an appropriately positive name for a grade that can be promoted for its leaner quality.

A group of twelve health/consumer ogranizations indicated support for the Public Voice petition. They echoed the

Public Voice statement that the strong confidence consumers have in the Federal beef grades should be maximized for the benefit of the public's health.

Proposed Standards

Consideration of all the available data and information and an evaluation of the alternatives available indicated that renaming the Good grade to Select would present the industry with an opportunity to use a "new" official grade to identify an alternative to the Choice grade for market segments desiring such beef. This beef has been found to be generally acceptable in palatability, and many consumers in the 1985 National Consumer Retail Beef Study gave this beef a high rating because of its perceived leanness. Since there would appear to be marketing opportunities for this type of beef and it would appear to be in the public interest to identify a larger segment of the fed-beef supply for its positive attributes of leanness, and also because consumers would benefit from the opportunity of using an official USDA grade to identify a particular kind of beef with specific qualities different from the Prime or Choice grade, it was proposed in the March 4, 1987, **Federal Register** that the "Good" quality grade be renamed "Select."

Comments

A 60-day comment period, which closed on May 4, 1987, was provided for submission of comments. The official number of comments that were submitted prior to the close of the comment period was 170. The comments were divided into several sectors representing segments of the production and consumption chain with similar interests. The comments were also classified as individual or organization. The distribution of comments by these categories is shown in Table 1.

TABLE 1.—DISTRIBUTION OF COMMENTS

Sector	Classification		
	Individual [1]	Organization [2]	Total
Livestock Production	3	6	9
Packing and Processing	9	3	12
Purveyor and HRI User	2	1	3
Consumer	123	4	127
Academia, Government, and Health	3	2	5
Total	152	18	170

[1] Includes comments of individuals, comments with multiple signers, and businesses.
[2] Includes comments of state, regional, and national organizations and government agencies.

The percentage support/non-support for the proposed grade name change by sector and classification (i.e., individual or organization) is shown in Table 2. While an overall majority of the comments did not support the proposed change, most of these were received from 3 sources. These were individual consumers and individuals and organizations representing purveyors and HRI (hotel, restaurant, and institutional) users. A majority of comments from all other respondent groups, including organization comments from 4 of the 5 sectors, supported the concept of renaming the Good grade.

TABLE 2.—PERCENT SUPPORT/NON-SUPPORT

Sector	Classification			
	Individual [1]		Organization [2]	
	Support (percent)	Nonsupport (percent)	Support (percent)	Nonsupport (percent)
Livestock Production	75.0	25.0	83.3	17.7
Packing and Processing	75.0	25.0	75.0	25.0
Purveyor and HRI User	0.0	100.0	0.0	100.0
Consumer	12.8	87.2	100.0	0.0
Academia, Government, and Health	85.7	14.3	100.0	0.0
Total	22.4	77.6	83.3	16.7

[1] Includes comments of individuals, comments with multiple signers, and businesses.
[2] Includes comments of state, regional, and national organizations and government agencies.

The comments supporting the concept of renaming the Good grade generally supported the proposed changes as a means of improving the image of this type of beef and thus, improving its marketing. Some industry comments also indicated the name change would improve the available market information. This should allow producers to be compensated more fully for value produced and to adjust production more quickly in response to consumer desires. Consumer and health organizations that submitted official comments all supported the proposed change as a means of improving information for consumers in order that they may make better purchasing

decisions regarding the quality and/or nutritional characteristics of beef of various grades. A number of these comments indicated that the stigma associated with the current Good grade name prevented consumers from considering this type of beef because they perceive it to be inferior when in fact if they place a premium on nutrition, it has advantages over Prime or Choice beef. Almost all organizations viewed the name change as a potential means to improve the marketing of beef for the industry while providing a greater amount of beneficial information to consumers in order that more informed purchasing decisions may be made.

Quality/Price Relationships

Individual consumer comments generally expressed opposition to the proposed renaming of the Good grade. The comments opposed to the change generally expressed concern regarding the price or quality of beef. Many viewed the renaming as "another" (in reference to previous quality grade changes) lowering of the quality of beef. Others were concerned that the change would raise the price of this beef.

The Department has carefully considered these price and quality concerns and does not believe that changing the name of the Good grade will adversely impact consumers. Rather, the changes in grade terminology for the Good grade should provide consumers with greater information to make informed purchasing decisions regarding the quality, leanness, and price levels of beef. From a quality standpoint, the renaming does not alter the quality grade criteria for any grade. It does provide an improved name which should encourage a greater portion of the beef supply to be graded. This should benefit those consumers concerned about quality by providing official grades to use in making purchase decisions. For those consumers concerned primarily about quality, the Prime and/or Choice grades would provide the greatest assurance of obtaining the quality level they desire. For consumers preferring beef with less fat (marbling), the Select grade would provide an officially graded alternative.

Several commenters stated the cost of beef would rise due to the additional cost of having it graded. From a cost perspective, there would most likely be no increased costs associated with increased levels of grading due to the name change. Currently, the industry has the option to decide which grades they want to officially identify. Although not all beef is graded, practically all steer and heifer beef is "looked at" by graders, and even if a higher percentage of beef is graded, it is anticipated that it could be done with the current workforce at about the same cost to the industry. In fact, if more beef were officially graded, the cost of grading on a per pound basis would be expected to actually decrease.

The Department has concluded that there should be no significant change in the overall price of beef due to the name change. However, there will probably be some shifting in value of the beef in the current "no-roll" (ungraded) supply if a significant portion of this beef is graded as Select. Select is a more uniform, valuable product than some of the beef that is currently marketed as no-roll beef. The price for Select may increase may increase over that of the average for no-roll beef today, but there should also be a corresponding decrease in the price for the less desirable no-roll beef. It would be expected that the discounts for the less desirable beef would offset, or even exceed, any increase in the price for Select beef. Therefore, any shifts in pricing should have no or only minimal overall effects on retail prices.

Educational Program

Concern was also expressed by some individual consumers and a national trade organization that the change would be costly because all current literature concerning grades would have to be redone, and it would be costly to educate and inform consumers of the change. It is anticipated that there will be some costs associated with changing literature and other materials that reference the grade names. However, the extent of any such changes is extremely difficult to postulate. Most changes could be done as simple editorial changes at the time of reprinting of such materials because the changes affect only the grade terminology. However, some educational materials will have to be developed to provide consumers with information regarding the attributes of the Select grade. In fact, a number of comments supporting the grade name change indicated that an extensive educational program should be undertaken.

The development and dissemination of such educational information will require a cooperative effort, and USDA does intend to cooperate with educators, industry, and interested consumer groups in order to provide accurate information to consumers and users of the beef grades. Costs for such a program will depend greatly on the extent of the program, but it is anticipated that much of the information could be disseminated through the media, newsletters, etc., which would lessen considerably any associated costs. Also, it would be anticipated that businesses desiring to merchandise product with the new name would prepare materials that would provide consumers with information regarding the attributes of the grade. By utilizing these and other similar means to disseminate information, there is no indication that any significant costs should have to be borne by any industry, consumer, or government segment. Furthermore, because the change involves only a change in terminology and not grade requirements, persons familiar with the grades will only need to be informed of the name change.

Name Concerns

A few respondents suggested that another grade term instead of Select be considered, although few of these comments suggested any alternative terms. The Department was amiable to changing the name of the U.S. Good grade to another appropriate grade name. However, other terms for this grade of beef were considered at the time of the proposal but were rejected for various reasons. Such terms as Premium, Fancy, Deluxe, etc., which are acceptable as grade terminology in general, either connote a higher level of quality than appropriate for this grade of beef, or they also are already widely in use for labeling meat by individual companies, or both. The few comments that did suggest alternative grade terms, generally proposed the terms "Lean" and "Lite." However, these names are not acceptable since they would convey an attribute to the beef which would not be supported by the grading system.

The quality grades are indications of taste or palatability and are not intended to indicate composition or nutritional value. It is true that, on the average, the lean portion of Good grade beef is lower in marbling and fat content than Prime and Choice grade beef. However, there is considerable variation in external fat and yield grade within each quality grade. Yield Grade 4 and 5 beef is not uncommon in the Good grade. Overall, not all beef found in this grade could be considered to be "lean." Also, Food Safety and Inspection Service (FSIS) labeling regulations control the use of these terms and limit their use to specific meanings in regard to the fat content of meat. Most untrimmed cuts of beef from the Good grade would not meet these limitations.

Labeling Concerns

A concern regarding previous industry use of the term Select was raised by some industry respondents. These comments indicated a number of meat packers and processors were already using and intend to continue using the term "Select" in the marketing of a wide variety of fresh and processed beef and other meat items of widely varying quality. These respondents indicated their support for the proposal was conditioned on allowing companies which were already using the Select name to continue to do so. One trade organization suggested that companies be allowed to use the term "Select" on processed products while reserving its use on fresh meats for USDA. However, a comment from another trade organization predicated their support of the change on a requirement that the use of the term Select be limited to only officially graded product of that grade.

FSIS is responsible for the review and approval of labeling used on meat and poultry products. FSIS has historically restricted the use on labeling of meat grading terms (e.g., Prime, Choice) to meat or poultry products which have been officially graded, or to products which are at least equivalent to the grade in question (i.e., use of "Prime" or "Choice" on U.S. Grade A poultry).

Since the term "Select" has not been a meat or poultry grading term, it has been permitted to be used on meat and poultry items without regard to the grading of the item. Although the number of approved labeling which include the term "Select" is not known, the term has been used on some labeling as part of the product name.

At the time of the original proposal, the Department was aware of previous use of the term "Select" by several companies for both fresh meats and processed products. However, considerable support had been indicated for the Public Voice petition from the industry, and the Department was not aware of the extent to which the companies already using the term "Select" were committed to its continued use. Such use would be in conflict with the Department's policy of not allowing the use of grade terminology on meat products which have not been officially graded. However, denying those companies presently using "Select" the use of the term would, as pointed out in the comments, deny them a valuable asset which they had worked to obtain. Such denial of use could also place unwarranted economic burdens on these companies by not only causing them to lose their previous investments in advertising, marketing, and informational materials, but also by causing them to have to reinvest in new campaigns and materials in order to promote the new terms that they would have to use.

Suggestions to allow those companies already using the term "Select" to continue using it (grandfathering) were made by several respondents. The Department does recognize that there is some potential for confusion, particularly for fresh beef cuts, under this alternative. However, it has been determined that the benefits of providing the industry and consumers the improved grade term "Select" which meets the criteria for a proper term for this beef while still allowing those companies presently using the term in approved labeling programs to continue their use of the term, outweigh any potential problems, especially since much of the present use of the term Select is for processed meat items.

Therefore, it has been determined that meat grading terms, including now the term "USDA Select," will continue to be restricted to those meat products which have been officially graded. However, FSIS will take no action to rescind currently approved labeling which contains the term "Select."

Labeling for new or reformulated products or new product lines will be approved in accordance with the general policy with respect to grading terms, as described above.

Regulatory Concerns

A comment from a trade organization also suggested that as a further requirement, all Prime, Choice, and Select grade beef be subject to mandatory grading in order that consumers would be better able to identify the level of quality they desire. As mentioned previously, the grading of beef is a voluntary program provided under the Agricultural Marketing Act of 1946, as amended (7 U.S.C. 1621 *et seq.*). A mandatory requirement for grading all beef of certain grades is beyond the authority under which the beef grading program is provided.

A comment from another trade organization took issue with the determination that this action would not have a significant economic impact on a substantial number of small entities. This commenter urged USDA to initiate an economic impact study on the effects of the change that would examine the costs associated with an educational program, costs of retail product, costs to control abuse in advertising, and USDA administrative costs. The commenter also proposed that a pilot project be implemented to test the proposal.

AMS had previously determined that the change would not have a significant economic impact on a substantial number of small entities as defined by the Regulatory Flexibility Act (5 U.S.C. 601 *et seq.* This determination was based on the fact that the change involves only a change in the nomenclature of the Good grade name, the use of grades is voluntary, and the grades are applied equally to all size entities covered by the regulations. The Department recognizes, as discussed previously, there will be some costs associated with preparing new literature, some shifts in value of beef but with no anticipated change in overall costs to consumers, and no increased USDA administrative costs due to increased use of grading services, unionization of grading personnel, or increased supervisory personnel. However, any overall increased costs will be minimal, and there is no indication nor was any quantitative data supplied by the commenter that would alter the prior determination that the change would not have a significant economic impact on a substantial number of small entities.

In consideration of the public comments submitted in response to the proposed rule of March 4, 1987 (52 FR 6577), and all other available information, USDA adopts the proposed regulation with respect to renaming the U.S.D.A. Good beef grade to U.S.D.A. Select.

The standards for grades of slaughter cattle (7 CFR 53.203, 53.204, 53.205, and 53.206), which are based on the beef carcass grade standards, are revised to reflect the revisions of the beef carcass grade standards so that the grade name terminology used will be consistent with that used for the carcass standards, where appropriate. Grades of slaughter cattle are intended to be directly related to the grades of the carcasses they produce.

In consideration of the foregoing, certain sections of the regulations and standards appearing at 7 CFR Part 53 as they relate to livestock and certain sections of the regulations and standards appearing at 7 CFR Part 54 as they relate to meats, prepared meats, and meat products are amended as set forth below.

List of Subjects

7 CFR Part 53

Livestock, Cattle, Grading and certification, Standards.

7 CFR Part 54

Beef carcasses, Meat and meat products, Grading and certification, Standards.

PARTS 53 AND 54—[AMENDED]

1. The authority citation for Parts 53 and 54 continues to read as follows:

Authority: Agricultural Marketing Act of 1946, secs. 203, 205, as amended; 60 Stat. 1087, 1090, as amended (7 U.S.C. 1622 and 1624).

2. In 7 CFR Part 53 and 54, remove the word "Good" and replace it with the word "Select" in the following places:

(a) § 53.203(a), sentences 5 and 7;
(b) § 53.203(b)(3), sentence 1;
(c) § 53.204(c), heading;
(d) § 53.204(c)(1), sentence 1;
(e) § 53.204(c)(2), sentences 1, 2, and 7;
(f) § 53.205(c), heading;
(g) § 53.205(c)(1), sentence 1;
(h) § 53.205(c)(2), sentences 1, 2, and 4;
(i) § 53.206(a)(4), sentence 2;
(j) § 53.206(b)(4), sentence 3;
(k) § 53.206(c)(4), sentence 3;
(l) § 53.206(d)(4), sentence 3;
(m) § 54.104(b), sentences 3 and 5;
(n) § 54.104(n), sentence 1;
(o) § 54.104(o), sentence 3 (twice) and Figure 1;
(p) § 54.104(q), sentence 7;
(q) § 54.106(c), heading;
(r) § 54.106(c)(1), sentences 1 and 2;
(s) § 54.106(c)(3), sentence 1; and
(t) § 54.107(c), heading and sentence 1.

§ 54.11 [Amended]

3. In § 54.11(a)(1)(vii) insert "Select" following "Choice" in sentence 1.

§ 54.17 [Amended]

4. In § 54.17(b) insert "Select" following "Choice" in sentence 1.

Done at Washington, DC on September 18, 1987.

William T. Manley,

Deputy Administrator, Marketing Programs.

[FR Doc. 87-21925 Filed 9-22-87; 8:45 am]

BILLING CODE 3410-02-M

FEDERAL RESERVE SYSTEM

12 CFR Part 221

[Docket No. R-0608]

Regulation U; Credit by Banks for the Purpose of Purchasing or Carrying Margin Stock

AGENCY: Board of Governors of the Federal Reserve System.

ACTION: Final rule.

SUMMARY: The Board is amending Regulation U to exempt banks, when making loans of $100,000 or less, from the requirement that Federal Reserve Form U-1 be executed. Regulation U presently imposes a paperwork burden in connection with every bank loan secured by margin stock, no matter how small. By eliminating the necessity for the execution of a Federal Reserve Form U-1 for loans of $100,000 or less, the Board will substantially reduce the regulatory paperwork burden without any great loss in compliance benefit.

EFFECTIVE DATE: September 23, 1987.

FOR FURTHER INFORMATION CONTACT: Scott Holz, Attorney, Division of Banking Supervision and Regulation, (202) 452-2781; or for any user of a Telecommunication Device for the Deaf (TDD) *only*, Ernestine Hill or Dorothea Thompson, (202) 452-3244.

SUPPLEMENTARY INFORMATION: Over 100 comments were received on this proposal which was published in the **Federal Register** on August 11, 1987 (52 FR 29701). With the exception of one money-center bank, they all supported the proposal as a useful way to reduce paperwork burden. The exception suggested two further deregulatory revisions in this area. These suggestions will be addressed next year when the form is scheduled for System review.

Final Regulatory Flexibility Analysis

The Board's Initial Regulatory Flexibility Analysis indicated that this proposed amendment, if adopted, is expected to substantially reduce paperwork burden on small banks and, therefore, will have no adverse economic impact on small entities. Comments were invited on the statement; no comments to the contrary were received. The Board, therefore, certifies for the purposes of 5 U.S.C. 605(b) that the amendment is not expected to have any adverse impact on a substantial number of small entities. The amendment imposes no additional information collection requirements.

The requirement of 5 U.S.C. 553(d) with respect to deferred effective date is not being followed in connection with this amendment because the amendment relieves a restriction previously imposed.

List of Subjects in 12 CFR Part 221

Banks, Banking, Credit, Federal Reserve System, Investments, Margin, Margin requirements, Reporting and recordkeeping requirements, Securities.

For the reasons set out in this notice, and pursuant to the Board's authority under sections 7 and 23 of the Securities Exchange Act of 1934, as amended (15 U.S.C. 78 g and w), the Board amends Title 12, Part 221 of the Code of Federal Regulations as follows:

PART 221—[AMENDED]

1. The authority citation for Part 221 continues to read as follows:

Authority: 15 U.S.C. 78c, 78g, 78h and 78w.

2. Section 221.3 is amended by revising paragraph (b), redesignating (c) (i) and (ii) as (c)(1) and (2), and revising (c) (1) as follows:

§ 221.3 General requirements.

* * * * *

(b) *Purpose statement.* Except for credit extended under paragraph (c) of this section, whenever a bank extends credit secured directly or indirectly by any margin stock, in an amount exceeding $100,000, the bank shall require its customer to execute Form FR U-1 (OMB No. 7100-0115), which shall be signed and accepted by a duly authorized officer of the bank acting in good faith.

(c) *Purpose statement for revolving-credit or multiple-draw agreements.* (1) If a bank extends credit, secured directly or indirectly by any margin stock, in an amount exceeding $100,000, under a revolving-credit or other multiple-draw agreement, Form FR U-1 can either be executed each time a disbursement is made under the agreement, or at the time the credit arrangement is originally established.

* * * * *

By order of the Board of Governors of the Federal Reserve System, September 16, 1987.

William W. Wiles,

Secretary of the Board.

[FR Doc. 87-21870 Filed 9-22-87; 8:45 am]

BILLING CODE 6210-01-M

DEPARTMENT OF TRANSPORTATION

Federal Aviation Administration

14 CFR Part 39

[Docket No. 87-CE-23-AD, Amdt. 39-5728]

Airworthiness Directives; Beech Models 35, 35R, A35, B35, C35, D35, E35, F35, G35, H35, J35, K35, M35, N35, P35, S35, V35, V35A, and V35B Airplanes

AGENCY: Federal Aviation Administration (FAA), DOT.

ACTION: Final rule.

SUMMARY: This amendment adopts a new Airworthiness Directive (AD), that supersedes AD 86-21-07 applicable to certain Beech Models 35, 35R, A35, B35, C35, D35, E35, F35, G35, H35, J35, K35, M35, N35, P35, S35, V35, V35A, and V35B airplanes. AD 86-21-07 restricts the maneuvering, the maximum

structural cruise and never exceed speeds to preclude operation of the airplane where airloads may be developed that could result in structural failure of the V-tail. It also prohibits airplanes certified in the utility category from being operated other than in the normal category. As a result of subsequent testing, this superseding AD adds provisions for removing those limitations by incorporation of Beech defined modifications. To preclude possible overload conditions resulting from deteriorated handling qualities when operating out of the aft CG limit, the AD also requires that the accuracy of the airplane weight and CG be assessed and if necessary require an actual weighing of the airplane, and require that certain precautionary instructions be placed in the airplane and in the Pilot's Operating Handbook and FAA approved Airplane Flight Manual. This superseding action will minimize the possibility for in-flight failures due to inadequate strength of the V-tail, and/or possible wing overload due to adverse flight characteristics resulting from operation outside the aft limit of the center of gravity envelope.

DATES: *Effective Date:* October 21, 1987. *Compliance:* As prescribed in the body of the AD.

ADDRESSES: Beech Mandatory Service Bulletin (SB) 2188 dated May 1987, applicable to this AD may be obtained from Beech Aircraft Corporation, Commercial Service, Department 52, P.O. Box 85, Wichita, Kansas 67201-0085; telephone 316-681-7279. This information may be examined at the Rules Docket, Office of the Regional Counsel, Room 1558, 601 East 12th Street, Kansas City, Missouri 64106.

FOR FURTHER INFORMATION CONTACT: Mr. Brian Yanez, FAA, Wichita Aircraft Certification Office, ACE-120W, 1801 Airport Road, Room 100, Mid-Continent Airport, Wichita, Kansas 67209; telephone 316-946-4409.

SUPPLEMENTARY INFORMATION: A proposal to amend Part 39 of the Federal Aviation Regulations to include an AD that supersedes AD 86-21-07 was published in the **Federal Register** on June 22, 1987 (52 FR 23461). The proposed AD was applicable to all Beech Models 35, 35R, A35, B35, C35, D35, E35, F35, G35, H35, J35, K35, M35, N35, P35, S35, V35, V35A and V35B airplanes except those modified per Supplemental Type Certificate (STC) SA2149CE (straight tail conversion). This proposed AD incorporated the airspeed limitations required by AD 86-21-07 and in-turn added provisions for removing these limitations with the incorporation of modifications identified in Beech Mandatory Service Bulletin (SB) 2188. A check of the accuracy of weight and balance data for all airplanes and of the ruddervator static balance for the Models C35 thru V35B was also proposed.

The proposal resulted from a program that was initiated by a request from the American Bonanza Society to the FAA to investigate the airworthiness of the Model 35 Series V-tail Bonanza. The follow-on study contract with the Transportation Systems Center (TSC), and its subsequent recommendation that limited tests be conducted to determine tail failure mechanisms and actual structural margins of the airplane, resulted in Beech Aircraft Corporation responding with an extensive test program to address the TSC concerns. The initial results of the Beech tests indicated that the strength of the empennage may be marginal when the airplane is operated in certain extreme flight conditions within the approved flight envelope. Consequently, AD 86-21-07 (51 FR 43337; December 2, 1986) was issued to limit the maneuver, maximum structural cruise and never exceed speeds of all Model 35 Series V-tail airplanes. In addition, airplanes certificated in utility category were limited to normal category operation. These actions were considered necessary interim measures until the total investigation was completed and a modification could be accomplished.

The now completed testing and analysis produced a new set of empennage aerodynamic loads which are significantly higher than those used in the original certification of the airplane and supports the initial finding that the V-tail empennage of certain models is structurally inadequate to sustain certain of these loads within the design flight envelope. In addition, the test results indicate handling and stability characteristics of the airplane deteriorate when operated aft of the approved aft CG limits. In addition to degrading ground handling qualities, operation outside the CG limit results in a reduction in stick force per "g" and increases the possibility for pilot induced structural overload.

Beech has issued SB 2188 dated May, 1987, applicable to the Models C35 thru V35B airplanes, referencing Beech Kits 35-4016-3S, -5S, -7S, -9S. These kits provide instructions and material for strengthening the tail, instructions to inspect the aft fuselage and empennage, instructions to check the ruddervator system travel, cable tension, and rigging, procedures to reduce nose down trim limits, instructions to change ruddervator trim cables on some airplanes, and provide appropriate Pilot's Operating Handbook and FAA approved Airplane Flight Manual revisions addressing the weight and balance issue.

In addition to superseding AD 86-21-07 with the reissuance of the limitations contained in AD 86-21-07, the proposed AD specified compliance with SB 2188 as a means to remove the limitations and also specified a check of the accuracy of the airplane weight and balance (and reweigh if necessary), and a check of the ruddervator static balance on all Model C35 thru V35 airplanes.

In the development of the NPRM the FAA recognized that several STCs had been issued prior to the initiation of this latest test program that effect a reduction in deflections of the stabilizer leading edge. By observation, it appeared that these modifications are equivalent to the above referenced kits. However, since they were approved based on loads criteria used in the original certification and had not been subjected to the higher test loads to which the Beech kit is designed, they could not be identified as equivalent to the Beech modification. Therefore, the proposed AD stated that all external modifications incorporated by STC must be removed, or trimmed as appropriate, to permit installation of the Beech kit. The proposal further stated that the external angles of STC SA1649CE on airplane Models H35 thru V35 could be retained but would require trimming of the forward section to permit installation of the Beech kit. In addition, since those angles installed per STC SA1650CE interfere with the external doubler required on Models C35 thru G35, the NPRM would require the removal of these angles.

Interested persons have been afforded an opportunity to comment on the proposal. There were 29 written comments submitted to the Rules Docket. In addition, verbal comments pertaining to the proposed rule were received during the FAA Listening Session at the American Bonanza Society Meeting in Wichita, Kansas July 17, 1987. Comments from the 17 individuals who spoke at the meeting are included in the minutes filed in the Rules Docket. All of these comments, written and verbal, are summarized and discussed below: (Several commenters addressed more than one issue, thus the total comments exceed the number of respondents.)

Eight verbal and five written comments were received regarding the proposed verification of airplane weight

and balance. Six commenters thought the airplane should not be weighed if airplane records contained current weight and balance data. The FAA agrees, as this provision was originally included in the AD as method 1, paragraph (c)(1). Two commenters, including the manufacturer, did not believe sufficient justification was given for requiring a weight and balance check and the requirements should therefore be deleted. Two others asked why a check was necessary for Bonanzas only. The FAA has determined, as stated in the discussions in the NPRM, that the handling and stability characteristics of these airplanes deteriorate when operated aft of the approved aft CG limit. Since these airplanes are easily loaded beyond the aft limit, it is imperative that accurate basic empty weight data be used to preclude inadvertently loading the airplane to an unsafe condition wherein stick force per "g" reductions increase the possibility for pilot induced structural overload. This is considered to be a contributing factor in some of the more than 100 in-flight wing failures. One commenter stated that a check of the complete weight and balance is already required in annual inspections and should not be imposed in the AD. The FAA does not agree. A check of the complete weight is not listed in the annual or 100 hour inspection requirements of FAR 43, appendix D; therefore, including this in the AD is not redundant. Two commenters believe the pilot should be permitted to approve the weight and balance requirements of the AD. The FAA disagrees. The determination of the airplane empty weight and balance is considered to be a maintenance function. Therefore, the airplane log book entry must be accomplished by authorized maintenance personnel.

Seven verbal and six written comments were received concerning ruddervator static balance. One commenter suggested Beech develop a method to check the ruddervator static balance with the control surface on the airplane. The FAA is not aware of any such method being used or under development. Since an acceptable procedure already exists, this corrective action should not await development of a new method. If a new method is developed, it may be considered under the equivalent method of compliance paragraph of the AD. Six commenters believe that the ruddervator static balance is adequate if the airplane records indicate the balance status to be current. The FAA concurs and has accordingly amended paragraph (b)(3) of the AD. One individual thought the pilot should be authorized to determine the adequacy of the balance. The FAA does not agree. This is a maintenance function similar to the airplane weight and balance assessment and, as previously stated, must be an airplane log book entry made by an authorized maintenance inspector. Three commenters, including the manufacturer, thought the requirements for rechecking the ruddervator static balance was inadequately justified and should be deleted since airworthiness requirements already exist to accomplish this task. Furthermore, two others questioned the need to take corrective action against flutter if no flutter problem is known to exist. The FAA agrees that maintenance manuals specify that the static balance should be checked after repairs to or repainting of the surface. However, verbal comments received from the field, including repair stations, indicate this is not being accomplished and surfaces checked are not within factory tolerances. Although none of the more than 200 in-flight structural failures have been attributed to flutter, the FAA has determined that if the structural integrity of the Bonanza tail is to be affirmed, considerations for possible flutter onset due to inadequate control balance must be addressed along with static strength. An inspection for proper control balance is equally as important as the inspection performed in accordance with the Beech Service Instructions to assure the structure conforms to type design.

Four verbal and twenty eight commenters thought the modifications incorporated by STC should be considered equivalent to the Beech modifications. These commenters expressed belief that previously installed STC approved leading edge stiffeners, namely the Knots 2-U and Mike Smith Aero Stub Spar/Tail Safe kits, were obviously as good as or better than the Beech modification and should be approved as a means of compliance with the AD. The FAA's position regarding the acceptability of these modifications is clearly stated in the Supplementary Information of the NPRM. To reiterate, these modifications were designed to reduce the deflections of the stabilizer leading edge. At the time they were approved, it had not been established by the FAA that such a modification was required for an airplane to be airworthy. Consequently, approval was based on load criteria used in the original certification of the airplane. Therefore, the STC modified tails have not been subjected to the higher test load envelope to which the Beech modification has been demonstrated and cannot be approved as equivalent to the Beech kit without additional substantiating data.

Two individuals suggested previously installed modifications should be allowed to remain installed if they do not interfere with the modification required of the AD and any special instructions should be included in the AD. The FAA has determined that these issues have been adequately covered in the proposed rule and the Supplementary Information of the NPRM. Two individuals expressed concern that removing installed STC kits would create extra fastener holes that could reduce the strength of the tail. While FAA agrees that some residual rivet holes may result from the removal of the leading edge cuff on some airplanes, the reduction in local tail strength will be minimal.

Six comments were received addressing the inadequacy of the Beech Service Bulletin inspections. Two believed there were no inspections to detect bent stabilizers. The FAA does not agree. Any significant permanent set that would affect structural integrity will be detected by the specified inspection of the supporting fuselage bulkhead and stabilizer root rib. One commenter stated no guidance is given for checking the airworthiness of the stabilizers, including inspections for corrosion of magnesium parts. The FAA disagrees. The instructions provided in the Beech Service Kits are sufficiently comprehensive for FAA approved maintenance personnel to follow. One commenter noted ruddervator push-pull tubes have been found full of water, corroded and bent. These should be rebuilt or strengthened and the upper rod end sealed. The FAA has determined that the instructions identified in the Beech Service Kits specifying compliance with Beech Service Instruction 0989, "Inspection of Ruddervator Control Push Rods," adequately address this concern.

After installation of the Beech kit, one individual found his airplane was out of rig in yaw. He believes each airplane should be flight tested after modification prior to delivery to the owner. The FAA does not agree that flight testing is required if procedures for maintaining yaw trim as defined in SB 2188, are followed. These procedures are to be followed when re-rigging the empennage controls required by paragraph (b)(a)(B) of this AD. The maintenance and shop manuals, referenced by SB 2188, also address adjusting the airplane for yaw.

Another commenter thought airplane nose down trim limits are being improperly adjusted. Normal dive speed

cannot be reached without applying forward pressure on the control column. It is the FAA's intent to limit the nose down trim so that inadvertent excursions above dive speed would be more difficult to achieve. Therefore, additional pilot effort to reach dive speed with the re-set trim travel is expected.

Seven verbal and five written comments were received concerning miscellaneous issues. Three commenters, including the manufacturer, thought the pilot should be able to sign off the completion of the AD and restore the original operating speeds. The FAA does not agree. A pilot may not be knowledgeable of all maintenance aspects of the AD, therefore, only FAA certificated maintenance personnel may complete a FAA Form 337, "Major Repair and Alteration," and make the appropriate airplane log book entries.

Four commenters were opposed to the omnibus aspects of the AD. They believe different AD's should be issued, if required, to address separately the modifications, weight and balance, ruddervator static balance, and elevator trim change. The FAA disagrees. All of these aspects are pertinent to the re-establishment of the integrity of the airplane and removal of current speed limitations.

One comment was received to remove the nose down trim limitation from the AD. The commenter, having already complied with SB 2188, asserts there is inadequate nose down trim authority to maintain level flight at full aft CG with the trim limit set at −4.5 degrees for the later Model 35 series airplanes. Subsequent analyses by Beech has verified a need to change this limit to −5.5 degrees for the N35 thru V35B Models. Beech has changed the service kit required by the service bulletin to reflect this change.

One commenter thought the AD should address removal of placards. The FAA agrees and this is addressed in paragraph (d) of the AD.

Two comments were received regarding cost. One stated cost to owners would be escalated because mechanics would replace parts unnecessarily to protect themselves. Another stated that Beech is paying less to non-Beech facilities than their own facility to accomplish the SB tasks. The FAA does not have any control over either of these aspects. However, since most of the work will be performed by Beech facilities, the cost estimates quoted in this AD are appropriate.

The following concerns were provided by Beech Aircraft Company:

(1) The models of the affected airplanes should also include the Super-V airplanes. The FAA does not agree. The Super-V, a conversion of the single engine Beech 35, 35A or 35B to twin engines, is not identified as a Beech Model 35 Series airplane. The gross weight and CG and airspeed limits are all considerably different than the Beech airplanes from which they were derived. The tails of the airplanes are of the early 35 Series configurations that do not require modifications. Since there are no data available, or service history, to dictate that speed limitations, modifications or evaluations of airplane weight and balance are necessary, there is no basis for including these airplanes in the AD.

(2) The Summary of the Notice states the proposed superseding action will "prevent" possible in-flight failures. Such action can only minimize circumstances to the maximum extent, not "prevent." The FAA agrees that the word "prevent," although conventionally used, is perhaps too presumptive and has changed the phrase to "minimize the possibility of in-flight failures . . ."

(3) The telephone number listed for Beech Aircraft Corporation should be 316-681-7279. The FAA has corrected the number accordingly.

(4) The use of the word "common" in the second paragraph of the Discussion section misrepresents actual operating circumstances. The phrase "in a few cases" should replace the word "common" to more accurately describe the matter. The FAA acknowledges the manufacturers concern that the use of the word "common" may not be totally proper. The intent of this paragraph was to emphasize the ease with which the 35 Series, specifically the S35 and later model airplanes, may be loaded outside their approved envelope even with modest payload. The recommended wording, however, is considered to understate the potential frequency of the condition. Since further use of this term is avoided, the issue becomes moot.

(5) Substitute "certain extreme flight conditions" for "certain flight conditions" in paragraph 3 of the Discussion to more accurately define the issue. The FAA agrees that insertion of the word "extreme" is appropriate.

(6) Insert the word "cable" in front of "tension" when referring to ruddervator system checks to better define the required action. The FAA agrees and has incorporated the change herein.

(7) To improve accuracy, delete the phrase ". . . or develop in other airplanes of the same type design . . ." in paragraph 5 of the Discussion. The need for this change should be obvious. The FAA does not agree. This is a regulatory phrase and cannot be deleted.

(8) The external reinforcement angles referenced in paragraph (b)(2) of the proposed rule cannot be retained and trimmed on Model C35 thru G35. The FAA does not agree that the above statement is made or implied. The AD states that the angles installed per STC SA1649CE may be retained if trimmed. STC SA1649CE does not apply to Model C35 thru G35 airplanes.

(9) Beech SB 2188 does not cover ruddervator static balance checking (reference paragraph (b)(3) of the AD). It does refer to maintenance documentation, however. This should be clarified. The FAA agrees that the present wording may be interpreted to imply that SB 2188 requires static balance checking. The phrase "as referenced in SB 2188" has been deleted and a new sentence added which reads: "These Manuals are referenced in SB 2188."

(10) Paragraph (b)(4) of the AD should be more specific regarding replacement of ruddervator tab cables. The FAA agrees and has revised the last phrase to read ". . . and for Models C35, D35, E35, F35 and G35 replace ruddervator tab control cables with larger diameter cables in accordance with SB 2188."

(11) The unusable and undrainable fuel values, for airplanes equipped with wing tip tanks, have not been taken into account (reference AD paragraph (c)(2)(B)(8)). The FAA, prior to issuing the Notice of Proposed Rule Making, reviewed the effects of unusable and undrainable fuel on airplane CG. The results of that review indicated the effects to be negligible.

(12) Recognizing the effect of propulsive thrust on aerodynamic loads as evidenced in their test program, Beech expressed concern regarding the integrity of those airplanes modified by STC wherein horsepower capability and the resultant thrust is increased. Since the available margins of safety may decrease significantly due to these power increases, Beech suggested the FAA carefully evaluate the continued validity of these STC approvals, including those that change the propeller. The FAA is aware of the influence of power on Bonanza tail loads, specifically that maximum horsepower as opposed to zero horsepower or thrust, is the design condition. Only a small amount of data is available from the Beech test/analysis program to determine the effect of incremental changes in horsepower above the baseline maximum power. Based on the data available, it is evident that margins will be reduced for power

increases of 100 HP or more, but will remain well within the 1.5 margin of safety. However, without more conclusive data, the FAA does not have a basis for separate action for these airplanes. Additionally, it must be assumed in the original supplemental type certification of the powerplant modification that the effect of thrust on the structure was adequately considered, and with this AD the airplane is simply being restored to its originally intended integrity.

The FAA has determined that this AD involves approximately 7200 airplanes. The cost of the modifications and inspections as defined in SB 2188 are $1,460 per airplane for the Models C35 through G35, $775 per airplane for the Models H35 through M35, and $850 per airplane for the Models N35 through V35B. There are approximately 1600 Models C35 through G35, 1300 Models H35 through M35, and 3100 Models N35 through V35B airplanes; resulting in estimated costs of $2,336,000.00, $1,007,500.00 and $2,635,000.00 respectively. When all airplanes are modified, the estimated total cost of $5,978,500.00 will be absorbed by Beech Aircraft Corporation warranty provisions as specified in SB 2188.

In addition to the requirements of SB 2188 on Models C35 thru V35B airplanes, the AD requires ruddervator rebalancing, removal of any previously installed external stiffeners (other than previously described) and for all Model 35 airplanes, determination of the accuracy of the airplane CG data including an actual airplane weighing if required. The cost of these additional requirements is estimated to be $1,155,000. This yields an estimated total cost to the private sector of $7,134,000 which is less than the threshold for a significant economic impact. Further, few, if any, small entities are expected to own a sufficient number of airplanes to exceed the threshold for the Regulatory Flexibility Act.

Therefore, I certify that this action: (1) Is not a "major rule" under Executive Order 12291, (2) is not a "significant rule" under DOT Regulatory Policies and Procedures (44 FR 11034; February 26, 1979) and (3) will not have a significant economic impact on a substantial number of small entities under the criteria of the Regulatory Flexibility Act. A copy of the final evaluation prepared for this action is contained in the regulatory docket. A copy of it may be obtained by contacting the Rules Docket at the location provided under the caption **"ADDRESSES."**

List of Subjects in 14 CFR Part 39

Air transportation, Aviation safety, Aircraft, Safety.

Adoption of the Amendment

Accordingly, pursuant to the authority delegated to me by the Administrator, the Federal Aviation Administration amends § 39.13 of Part 39 of the FAR as follows:

PART 39—[AMENDED]

1. The authority citation for Part 39 continues to read as follows:

Authority: 49 U.S.C. 1354(a), 1421 and 1423; 49 U.S.C. 106(g) (Revised, Pub. L. 97–449, January 12, 1983); and 14 CFR 11.89.

§ 39.13 [Amended]

2. By adding the following new AD:

Beech: Applies to all Model 35, 35R, A35, B35, C35, D35, E35, F35, G35, H35, J35, K35, M35, N35, P35, S35, V35, V35A, and V35B (all serial numbers) airplanes certificated in any category except to those Models S35, V35, V35A and V35B airplanes modified per Supplemental Type Certificate (STC) SA2149CE (straight tail conversion).

Compliance: Required as indicated, unless already accomplished.

To minimize the possibility for in-flight failures due to inadequate strength of the V-tail, and/or adverse flight characteristics resulting from operation outside the aft limit of the center of gravity envelope, accomplish the following:

(a) Prior to further flight after the effective date of this AD, unless accomplished per AD 86–21–07:

(1) For Models 35, 35R, A35, B35, C35, D35, E35, F35 or G35:

(A) Fabricate and install on the instrument panel as near as possible to the airspeed indicator and in clear view of the pilot the following placard using letters of 0.10 inch minimum height. "Never exceed speed, V_{ne}, 144 MPH (125 knots) IAS; Maximum structural cruising speed, V_{no}, 135 MPH (117 knots) IAS; Maneuvering speed, V_A, 127 MPH (110 knots) IAS."

(B) Mark the outside surface of the airspeed indicator with lines of approximately 1/16 inch by 3/16 inch as follows:

(i) Red line at 144 MPH (125 Knots), and

(ii) Yellow line at 135 MPH (117 knots), and

(iii) A white slippage mark between the airspeed indicator glass and case to visually verify glass has not rotated.

(C) Place a copy of this AD in the Pilot's Operating Handbook and FAA approved Airplane Flight Manual (POH/AFM) and observe the specified limits.

(D) Operate the airplane in accordance with these speed limitations.

(2) For Models H35, J35, K35, M35, N35, P35, S35, V35, V35A, and V35B:

(A) Fabricate and install on the instrument panel as near as possible to the airspeed indicator and in clear view of the pilot the following placard using letters of 0.10 inch minimum height. "Never exceed speed, V_{ne}, 197 MPH (171 knots) IAS; Maximum structural cruising speed, V_{no}, 177 MPH (154 knots) IAS; Maneuvering speed, V_A, 132 MPH (115 knots) IAS."

(B) Mark the outside surface of the airspeed indicator with lines of approximately 1/16 inch by 3/16 inch as follows:

(i) Red line at 197 MPH (171 knots), and

(ii) Yellow line at 177 MPH (154 knots), and

(iii) A white slippage mark between the airspeed indicator glass and case to visually verify glass has not rotated.

(C) Place a copy of this AD in the POH/AFM and observe the specified limits.

(D) Operate the airplane in accordance with these speed limitations.

(3) For all applicable models, fabricate and install on the instrument panel, over the existing "Utility Category" placard the following placard using letters of 0.10 inch minimum height: "Normal Category Operation Only" and operate the airplane accordingly.

(4) The requirements of paragraph (a) may be accomplished by the holder of a pilot certificate issued under Part 61 of the Federal Aviation Regulations on any airplane owned or operated by him which is not used under Part 121 or 135. The person accomplishing these actions must make the appropriate aircraft maintenance record entry as prescribed in FAR 43.9.

(b) Within the next 12 calender months after the effective date of this AD, for Models C35, D35, E35, F35, G35, H35, J35, K35, M35, N35, P35, S35, V35, V35A and V35B airplanes accomplish the following:

(1) Visually inspect the empennage, aft fuselage and ruddervator control system in accordance with the appropriate kit instructions specified in Beech Service Bulletin (SB) 2188. Perform the following corrective actions as defined by these instructions:

(A) Replace or repair structural components as required.

(B) Set the elevator, rudder and tab system travels, cable tensions and rigging as specified in the appropriate airplane maintenance or shop manual as referenced in SB 2188.

(2) Remove all external stabilizer reinforcements incorporated per STC SA845GL, SA846GL, SA1650CE, SA2286NM or SA2287NM. Seal or fill any residual holes with appropriate size rivets. The internal stub spar incorporated by SA1649CE and SA1650CE may be retained. The external angles installed per STC SA1649CE may also be retained by properly trimming the leading edge section to permit installation of the stabilizer reinforcement per paragraph (b)(4) of this AD. If any other modification has been incorporated on the stabilizer, notify the Wichita Aircraft Certification Office, telephone 316–946–4409 prior to accomplishing paragraph (b)(4) of this AD.

(3) Determine the accuracy of the static balance of the ruddervator by reviewing the airplane records. If any repainting, modification, repair to the ruddervators has been made since the last balance, check the static balance of the ruddervator and balance as necessary using the methods and criteria

specified in the appropriate Airplane Maintenance or Shop Manual. These manuals are referenced in SB 2188.

(4) Following completion of paragraphs (b)(1), (b)(2), and (b)(3) of this AD, install stabilizer reinforcements, install warning placards and set elevator nose down trim in accordance with Beech SB 2188 and for Models C35, D35, E35, F35 and G35 replace ruddervator tab control cables with larger diameter cables in accordance with SB 2188.

(5) Place the revision/supplement to the POH/AFM specified in SB 2188 in the airplane. Assure that the correct POH/AFM, as listed in the latest revision to the appropriate Type Certificate Data Sheet (TCDS), is installed in the airplane.

(c) Upon completion of the requirements of paragraph (b) of this AD, within the next 12 calender months after the effective date of this AD, for all 35 Series airplanes determine the accuracy of airplane basic empty weight and balance information using one of the following three methods:

(1) *Method Number 1:*

(A) Review existing weight and balance documentation to assure completeness and accuracy of the documentation from the most recent FAA approved weighing, or from factory delivery, to date of compliance with this AD.

(B) Inspect the airplane and compare the actual configuration of the airplane to the configuration described in the weight and balance documentation, and

(C) If equipment additions or deletions are not reflected in the documentation or if modifications affecting the location of the center of gravity (e.g. paint or structural repairs) are not documented, determine the accuracy of the airplane weight and balance data by using either method number 2 shown in paragraph (c)(2) of this AD or weigh the airplane as specified in paragraph (c)(3) of this AD.

(2) *Method Number 2:*

(A) Assemble the following equipment:

(1) One certified platform scale having a range of 750 to 1000 pounds capable of supporting the nose wheel without contacting the rest of the airplane.

(2) One scale ramp of sufficient incline to allow rolling the nose wheel onto the scale.

(3) One gear strut inflation system capable of inflating the gear struts to full extension.

(B) Procedure:

(1) Prepare the airplane for weighing, utilizing steps 2, 3 and 4 of the Weighing Instructions in the Weight and Balance Section of the POH/AFM. Ensure that the scale and airplane are on a level hangar floor and the aircraft is shielded from any wind.

(2) Inflate the main gear struts to maximum extension and completely deflate the nose strut. Inflate tires to the correct tire pressures as listed in appropriate Maintenance or Shop Manual. CAUTION: When deflating the nose strut, the aircraft may drop suddenly.

(3) Adjust the height of the scale platform to 12 inches above the hangar floor.

(4) Position the nose wheel onto the scale ensuring that the remainder of the airplane does not contact the scale and verify the proper wheel height. Set the parking brake and/or chock the main wheels.

(5) Record the net weight from the scale.

(6) Remove the nose wheel from the scale.

(7) Adjust the gear struts, per the appropriate Maintenance or Shop Manual, to the proper extension lengths.

(8) Subtract the following unusable, less undrainable, fuel from the current airplane Basic Empty Weight, CG and Moment:

	Weight (lbs)	Arm (in)	Moment (in-lbs)
For all airplanes; and	34.5	79.1	2,730
In addition, for airplanes with 10 gallon wing auxiliary tanks; or	5.0	94.0	470
In addition, for airplanes with 20 gallon auxiliary fuselage tanks	3.0	133.0	399

(9) Multiply the net weight obtained in paragraph (5) by 83.25 to obtain moment.

(10) Divide the weight obtained in paragraph (8) into the moment obtained in paragraph (9) to determine a value for X.

(11) Calculate a value of CG from: $CG = 92.50 - 1.01X$.

(12) Subtract the CG obtained in paragraph (11) from the CG obtained in paragraph (8).

(13) If the results of paragraph (12) indicate the difference in CG to be less than 0.5 inch, continue to use the basic empty airplane weight and CG data listed in the existing airplane records as the basis for computing the weight and CG for the loaded airplane using the criteria specified in the POH/AFM, Weight and Balance Section.

(14) If the results of paragraph (12) indicate the difference in CG to be more than 0.5 inch, determine the basic empty weight and CG of the airplane using Method Number 3.

Note: Sample Calculation
Basic Empty Weight (BEW)—2,064.5 lbs.
Arm—78.3 in.
Moment—161,650 in-lbs.
Paragraph (5): Nose Wheel Weight—341 lbs.

Weight (lbs)	Arm (in)	Moment (in-lbs)
Paragraph (8):		
2,064.5	78.3	161,650
−34.5	79.1	−2,730
2,030.0	*	158,920

$$*\text{Arm} = \frac{(158{,}920)}{(2{,}030.0)} = 78.29$$

Paragraph (9): Moment = (341 lbs) × (83.25 in) = 28,388 in-lbs.

Paragraph (10):

$$X = \frac{(28{,}388 \text{ in-lbs})}{(2{,}030.0 \text{ lb})} = 13.98 \text{ in.}$$

Paragraph (11): CG = 92.50 in. − (1.01) × (13.98 in) = 78.38 in.

Paragraph (12): Difference = (78.29 in) − (78.38 in) = −0.09 in.

Airplane is within ±0.5 in tolerance, therefore paragraph (13) applies.

(3) *Method Number 3:*

(1) Determine the basic empty weight and CG of the empty airplane using the Weighing Instructions in the Weight and Balance Section of the POH/AFM. Record the results in the airplane records, and use these new values as the basis for computing the weight and CG information as specified in the POH/AFM, Weight and Balance Section.

(d) Upon completion of the requirements of paragraphs (b) and (c), as applicable, remove the following that were installed in accordance with AD 86-21-07, Amendment 39-5474, or in accordance with paragraph (a) of this AD.

(1) The airspeed placards and airspeed indicator markings, and resume operations observing the original limits.

(2) The copy of AD 86-21-07 or the copy of this AD from the POH/AFM.

(3) The "Normal Category Operations Only" placard.

(e) Special Flight Permit may be issued in accordance with FAR 21.197 to operate airplanes to a base in order to comply with the requirements of paragraphs (b) through (d) of this AD.

(f) An equivalent method of compliance with this AD may be used when approved by the Manager, Wichita Aircraft Certification Office, Federal Aviation Administration, Central Region, 1801 Airport Road, Room 100, Mid-Continent Airport, Wichita, Kansas 67209.

All persons affected by this directive may obtain copies of the document(s) referred to herein upon request to Beech Aircraft Corporation, Commercial Service, Department 52, P.O. Box 85, Wichita, Kansas 67201-0085 or may examine the document(s) referred to herein at FAA, Office of the Regional Counsel, Room 1558, 601 East 12th Street, Kansas City, Missouri 64106.

This action supersedes AD 86-21-07, Amendment 39-5474.

This amendment becomes effective on October 21, 1987.

Issued in Kansas City, Missouri, on September 4, 1987.

Jerold M. Chavkin,

Acting Director, Central Region.

[FR Doc. 87-21856 Filed 9-22-87; 8:45 am]

BILLING CODE 4910-13-M

14 CFR Part 39

[Docket No. 86-CE-71-AD; Amdt. 39-5729]

Airworthiness Directives; Cessna 150, A150, F150, FA150, FRA150, 152, F152, FA152, A152, 170, 172, F172, FR172, P172, R172, 175, 177, F177, 180, 182, F182, FR182, R182, TR182, 185, A185, 188, A188, T188, 190, 195, 205, 206, P206, U206, TU206, TP206, 207, T207, 210, P210, T210, 336, 337, F337, FP337, P337, T337, and T303 Series Airplanes

AGENCY: Federal Aviation Administration (FAA), DOT.

ACTION: Final rule.

SUMMARY: This amendment adopts a new Airworthiness Directive (AD), applicable to certain Cessna single and twin engine airplanes, which requires inspections, maintenance, and possible parts replacement of seat rails and seat assemblies. The FAA has received reports of cracking and wear in the seat rails which could prevent positive engagement of the seat locking pins. The actions of this AD will preclude seat slippage and possible loss of the airplane.

DATES: *Effective Date:* October 23, 1987. *Compliance:* As prescribed in the body of the AD.

ADDRESSES: Cessna Single Engine Service Information Bulletin SE83-6 dated March 11, 1983, applicable to this AD may be obtained from Cessna Aircraft Company, Customer Service, P.O. Box 1521, Wichita, Kansas 67201. This information may be examined at the Rules Docket, FAA, Office of the Regional Counsel, Room 1558, 601 East 12th Street, Kansas City, Missouri 64106.

FOR FURTHER INFORMATION CONTACT: Mr. Douglas W. Haig, Aerospace Engineer, ACE-120W, FAA, Wichita Aircraft Certification Office, 1801 Airport Road, Room 100, Wichita, Kansas 67209; Telephone (316) 946-4409.

SUPPLEMENTARY INFORMATION: A proposal to amend Part 39 of the Federal Aviation Regulations to include an AD requiring inspections, maintenance, and possible parts replacement of seat rails and seat assemblies on certain Cessna single engine and twin engine airplanes was published in the **Federal Register** on January 7, 1987 (52 FR 554).

Prior to the NPRM issued January 7, 1987, an NPRM was issued on January 31, 1986 (51 FR 3985). This earlier action was proposed because, during the past five years, there have been 12 accidents/incidents in which slippage of the pilot's seat was considered contributory. The models involved were the Cessna 150K, 150L, 152, 170A, 172F, 172M, 175, 180, 180A, 182H, 185E, and A185F Series airplanes. In addition, during this same period there were 21 malfunction or defect reports, involving 14 airplanes, describing cracked and worn seat rails which could possibly lead to failures and seat slippage. These occurrences have been on Cessna 150, 152, 172, 175, 180, 182, 185, and 210 Series airplanes. Defective seat rails, whether cracked or worn, could possibly result in a seat locking pin slipping out of place.

The initial proposed AD issued on January 31, 1986, would have required relocation of seat stops on certain models, installation of a warning placard concerning proper locking of the seats on all models, and inspection of the seat rails and locking mechanism for all models. This action was proposed to prevent seat slippage and possible loss of the airplane. Based on public comment and re-evaluation of the FAA position, this proposal was withdrawn in the **Federal Register** on November 13, 1986 (51 FR 41112), for the following reasons: (1) An unsafe condition may be created for some pilots if the seat stops are relocated; (2) the information on the proposed placard is already a preflight checklist item; and (3) the crack inspection criteria called out was not adequate to prevent seat slippage.

Following the withdrawal of the January 31, 1986 NPRM, the FAA continued to be concerned about seat slippage, and three additional incidents of the problem were reported on single engine Cessna airplanes, from January to October, 1986. Also, the agency became aware of additional information with regard to wear tolerance criteria for the seat pin engagement holes in the seat rails adequate to prevent seat slippage. After further reevaluation, the FAA developed a new proposed AD action using this information. The new NPRM, issued January 7, 1987, also eliminated the relocation of the seat stop and the placard, which were included in the original January 31, 1986 NPRM, and set forth inspections for wear of the seat rail and several components of the seat used to attach the seat to the seat rails.

Interested persons have been afforded an opportunity to comment on the proposal. Twenty-four (24) commenters responded. This included two user groups, the manufacturer and one modifier. The manufacturer stated in his comments that he is in the process of developing secondary seat latch mechanisms for all affected airplanes and plans to announce their availability sometime in the future. The FAA will evaluate this system when the manufacturer's data becomes available.

One user group felt the proposed rule adequately addressed the seat slippage, but recommended that 25 hours time-in-service (TIS) be allowed on airplanes with out-of-tolerance seat rail holes. This suggestion was to prevent possible grounding of airplanes for parts. The FAA understands the concerns of the commenter relative to grounding airplanes, and has worked with the manufacturer to ease the repetitive inspection tolerances for worn seat rail holes as more fully discussed hereafter.

The second user group raised five relevant issues which will be addressed individually. (1) Objection was raised to the proposed rule on the grounds that it is maintenance oriented, which is a violation to the intended purpose for issuance of an AD. The FAA disagrees since FAR 39 applies to any unsafe condition however and wherever found. (2) The commenter noted the uniqueness and questioned the legality of quoting cost estimates on an annual basis rather than a lifetime basis. The FAA disagrees. Pursuant to Executive Order 12291, a major rule means any regulation that is likely to result in an annual effect on the economy of $100,000,000 or more. As stated in the NPRM, the annual cost of complying with the inspections required herein is $13,050,000 to the private sector, well below the Executive Order's annual ceiling. In addition, the cost of $90 per airplane for annual compliance of an AD does not exceed the threshold limitations for small entities and, as a result, will not have a significant economic impact on a substantial number of small entities under the Regulatory Flexibility Act. (3) This commenter, plus four others, recommended that the initial inspections be accomplished on the next annual or 100 hour inspection, as appropriate, after the accumulation of 1,000 hours TIS. The FAA agrees with this recommendation and has incorporated this change into the compliance statement of the AD. (4) This commenter, and one other, stated that certain requirements of the proposed rule require corrective action prior to further flight and that, due to possible parts shortages, airplanes could be grounded. The commenter recommended that, when an airplane does not meet the proposed inspection criteria, it should be allowed to be flown for a minimum of 50 hours while parts are on order, with certain inspections required during this interval. As previously stated, the FAA has worked with the manufacturer to establish the technical criteria for repetitive inspection of the seat rail holes. The repetitive inspections will allow time for

scheduling parts replacement. In addition, the AD provides two options which can be used for interim repair if parts are not available. (5) This commenter, plus three others, objected to the proposed rule on the grounds that the number of accidents do not justify the action of this AD. The FAA does not agree. AD's are not necessarily issued on the grounds that a certain number of accidents have occurred. The criteria used is whether an unsafe condition exists in a product and whether that condition is likely to exist or develop in products of similar type design.

One commenter stated that he had a Supplemental Type Certificate (STC) to install an adjustable belt to restrain aft movement of the seat. This commenter did not request his STC be an alternate means of compliance to the proposed rule, but merely noted its availability. Another commenter supported the AD, but proposed that his STC for additional seat restraint be made mandatory. Upon reevaluation, the FAA has concluded that these STC's as well as others can be used as appropriate interim repair if parts are not readily available.

Nineteen commenters opposed the proposed rule. Of the objectors, 12 cited cost as the reason to reject the proposed rule. The FAA maintains cost, in itself, cannot be the basis for being for or against an AD. Safety is the dictating factor. Two objectors favored better education of pilots and two felt current inspections were adequate. The FAA considers the issues addressed in this AD to be the result of unsafe conditions which are likely to develop in other airplanes of the same type design. One commenter recommended a redesign of the seat system. The FAA has determined that the proposed AD action, when adopted, will adequately prevent the unsafe condition.

Since the publication of the NPRM, the manufacturer has redefined the seat track hole wear criteria. The new criteria allows repetitive inspections and increases the wear limits from those proposed in the NPRM. Since this action is relieving, the new criteria is incorporated within the provisions of the AD without a further comment period. In addition, the manufacturer also conducted studies to estimate spare part requirements to support this AD. Their conclusion was that they could not meet anticipated requirements without the grounding of airplanes. They therefore proposed the installation of bolts in the seat track to restrict aft movement of the seat to six inches in the event of slippage. The manufacturer recommended this bolt installation be considered as an additional method for compliance with this AD. The FAA concludes that some relief is necessary to prevent grounding of airplanes, but cannot condone a condition wherein seat slippage would be considered a continuing acceptable operating condition; accordingly, interim repair will be permitted providing parts are on order. Since this action is relieving, it is being incorporated within the provisions of this AD without a further comment period. In addition, as previously addressed, STCs which provide seat restraint will also be included as interim repairs.

Accordingly, an AD is being issued in conformance with the NPRM except for the changes noted previously. The FAA has determined that this regulation involves 145,000 airplanes at an approximate annual cost of $90 for each airplane, or a total annual fleet cost of $13,050,000.

Therefore, I certify that this action (1) is not a "major rule" under Executive Order 12291; (2) is not a "significant rule" under DOT Regulatory Policies and Procedures (44 FR 11034; February 26, 1979); and (3) will not have a significant economic impact on a substantial number of small entities under the criteria of the Regulatory Flexibility Act. A copy of the final evaluation prepared for this action is contained in the regulatory docket. A copy of it may be obtained by contacting the Rules Docket at the location provided under the caption "**ADDRESSES**".

List of Subjects in 14 CFR Part 39

Air transportation, Aviation safety, Aircraft, Safety.

Adoption of the Amendment

Accordingly, pursuant to the authority delegated to me by the Administrator, the Federal Aviation Administration amends § 39.13 of Part 39 of the FAR as follows:

PART 39—[AMENDED]

1. The authority citation for Part 39 continues to read as follows:

Authority: 49 U.S.C. 1354(a), 1421 and 1423; 49 U.S.C. 106(g) (Revised, Pub. L. 97–449, January 12, 1983); and 14 CFR 11.89.

2. By adding the following new AD:

Cessna: Applies to the following airplanes, certificated in any category:

Models	Serial numbers
150A,150B, 150C, 150D, 150E, 150F, 150G,150H, 150J, 150K, 150L, 150M.	15059019 thru 15079405.
A150K, A150L, A150M	A1500001 thru A1500734.
152, A152	All.
170, 170A, 170B	18000 thru 27169.
172, 172A, 172B, 172C, 172D, 172E, 172F, 172G, 172H, 172I, 172K, 172L, 172M, 172N, 172P, 172Q.	All.
P172	P17257120 thru P17257188.
R172, R172E, R172F, R172G, R172H, R172J.	All.
R172K	R1722000 thru R1723454.
175, 175A	55001 thru 56777.
175B, 175C	17556778 thru 17557119.
177, 177A, 177B, 177RG	All.
180, 180A	30000 thru 32999.
180A, 180B, 180C	50000 thru 50911.
180D, 180E, 180F, 180G, 180H, 180J, 180K.	18050912 thru 18053203.
182, 182A, 182B, 182C, 182D, 182E, 182F, 182G, 182H, 182J, 182K, 182L, 182M, 182N, 182P, 182Q, 182R, T182, R182, TR182.	All.
185, 185A, 185B, 185C, 185D, 185E, A185E, A185F.	All.
188, A188, A188A, 188B, A188B, T188C.	All.
190, 195, 195A, 195B	7001 thru 7999; 16000 thru 16183.
205, 205A	205-0001 thru 205-0577.
206, U206, U206A, U206B, U206C, U206D, U206E, U206F, U206G, TU206A, TU206B, TU206C, TU206D, TU206E, TU206F, TU206G.	All.
P206, P206A, P206B, P206C, P206D, TP206A, TP206B, TP206C, TP206D.	P206-0001 thru P206-0603.
P206E, TP206E	P20600604 thru P20600647.
207, T207, 207A, T207A	All.
210, 210A, 210B, 210C, 210D, 210E, 210F, 210G, 210H, 210J, 210K, 210L, 210M, 210N, P210N, T210F, T210G, T210H, T210J, T210K, T210L, T210M, T210N, 210R, T210R, P210R.	All.
336	336-0001 thru 336-0195.
337, 337A, 337B, 337C, 337D, 337E, 337F, 337G, 337H, T337C, T337D, T337E, T337F, T337G, T337H, P337H, T337H-SP.	All.

Models	Serial numbers
T303	All.
F150F, F150G, F150H, F150J, F150K, F150L, F150M, FA150K, FA150L, FRA150L, FRA150M.	All.
FA152, F152	All.
FP172	FP172-0001 thru FP172-0003.
F172D, F172E, F172F, F172G, F172H, F172K, F172L, F172M, F172N, F172P, FR172E, FR172F, FR172G, FR172H, FR172J, FR172K.	All.
F177RG	All.
F182P, F182Q	All.
FR182G	All.
F337E, F337F, F337G, F337H.	All.
FP337	All.

Compliance: Required as follows, unless already accomplished:

I. For airplanes operating for compensation or hire:

(A) For airplanes having less than 1,000 hours time-in-service (TIS) on the effective date of this AD, accomplish the AD requirements prior to the accumulation of 1,100 hours TIS;

(B) For airplanes having 1,000 or more hours TIS on the effective date of this AD, accomplish the AD requirements within the next 100 hours TIS;

(C) Following the actions of (1) or (2) above, repeat the AD requirements of at each 100 hours TIS thereafter.

II. For airplanes operating under FAR Part 91:

(A) For airplanes having less than 1,000 hours TIS on the effective date of this AD, accomplish the AD requirements at the next annual inspection after the accumulation of 1,000 hours TIS;

(B) For airplanes having 1,000 or more hours TIS on the effective date of this AD, accomplish the AD requirements at the next annual inspection;

(C) Following the actions of (1) or (2) above, repeat the AD requirements at each annual inspection thereafter.

To assure proper engagement of the seat locking mechanism and to preclude inadvertent seat slippage, accomplish the following on each pilot and copilot seat and all associated seat rails:

(a) In accordance with the appropriate compliance time requirement above, accomplish the following:

(1) Measure each hole in the seat track(s) for excessive wear.

(i) If the wear dimension across any hole exceeds 0.36 inches but does not exceed 0.42 inches (see Figure 1), continue to measure each hole every 100 hours time-in-service for excessive wear.

(ii) If the wear dimension across any hole exceeds 0.42 inches, prior to further flight, replace the seat track.

(2) Visually inspect the seat rail holes for dirt and any debris which may preclude engagement of the seat pin(s). Prior to further flight, remove any such material.

(3) Lift up on the forward edge of each seat to eliminate all vertical play. In this position, measure the depth of engagement of each seat pin. If the engagement of any pin is less than 0.15 inches (see Figure 1b), prior to further flight, replace or repair necessary components to achieve a seat pin engagement of 0.15 inches or greater.

(4) Visually inspect seat rollers for flat spots. Assure all rollers and washers turn freely on their axle bolts (or bushings if installed) and move freely on the seat rails. Prior to further flight, replace rollers having flat spots and any worn washers. If there is any binding between the bores of the rollers, washers, and axle bolts (or bushings if installed), prior to further flight, remove, clean, and reinstall these parts.

Note: Do not lubricate rollers, washers, axle bolts or bushings as the lubrication will attract dust and other particles which can cause binding.

(5) Measure the wall thicknesses of the roller housing and the tang (see Figure 1b). If the tang thickness has worn to less than ½ the housing thickness, prior to further flight, replace the roller housing.

(6) Check the spring(s) that keep the lock pin(s) in position in the track holes for positive engagement action. Prior to further flight, replace any spring which does not provide positive engagement.

(7) Visually inspect the seat tracks for cracks in accordance with Cessna Single Engine Service Information Letter SE83-6, dated March 11, 1983. Prior to further flight, replace any seat rail exceeding the crack criteria as specified in SE83-6 with an airworthy rail.

(b) In the event replacement parts are not available but have been ordered, to permit the airplane to be flown until required parts are installed, accomplish one of the following options. However, by no later than October 1, 1988, accomplish the compliance to paragraph (a).

Option 1

(1) On eligible airplanes install one of the following STCs: SA2960NM, SA1209GL, SA1210GL, SA1211GL, SA1212GL, or SA3643SW.

Note: The STC provisions may be removed after compliance with paragraph (a) of this AD.

(2) Install a placard with a minimum letter size of ⅛ inch on the instrument panel in clear view of the pilot which states:

PARTS TO COMPLY WITH PARA (a) OF AD 87-(Insert the appropriate identification numbers of this AD.)—(Insert the appropriate identification numbers of this AD.) ARE ON ORDER. STC SA (Insert the appropriate identification numbers and letters being installed.) HAS BEEN INSTALLED.

(3) Remove the placard when airworthy seat rail parts are installed.

Option 2

(1) Determine which of the three configurations of seat track (0.50 inches high standard configuration, 0.69 inches high standard configuration, or 0.50 inches high with carpet retainers) is appropriate. These dimensions are measured from floor to top of rail.

(2) For airplanes incorporating the standard cross section rail .50 inches high, position the seat with the latching pin in the most forward locking position. Locate an AN3 bolt with a standard lock nut horizontally under the rail cap through one of the seat positioning holes to allow a maximum of 6 inches of travel on the seat.

(3) For airplanes incorporating the standard cross section rail .69 inches high, position the seat with the latching pin in the most forward locking position. Locate an AN4 bolt with a standard lock nut horizontally under the rail cap through one of the seat positioning holes that will provide a maximum of 6 inches of travel on the seat.

Note: It may be necessary to slightly clean out the hole with a ¼ inch drill.

(4) On those airplanes incorporating the carpet retainer feature with a rail height of .50 inches, locate the seat with the latching pin in the most forward locking position. Identify the seat retaining pin hole in the seat rail that provides a stop at the position that limits the seat roller housing travel to a maximum of 6 inches. Using a rotary file or other similar device, to provide clearance, remove the carpet retaining flanges local to the hole and insert an AN3 bolt horizontally through the rail under the rail cap and retain with a standard locking nut.

(5) On those forward roller housings made of aluminum accomplish the following:

(i) Remove the roller attach bolts and install two AN970-3 washers on the outside of each side of each forward roller housing.

(ii) Install an AN3 bolt of proper length and secure with a standard lock nut.

(6) Install a placard with a minimum letter size of ⅛ inch on the instrument panel in clear view of the pilot which states:

PARTS TO COMPLY WITH PARA (a) OF AD 87-(Insert the appropriate identification numbers of this AD.)—(Insert the appropriate identification numbers of this AD.) ARE ON ORDER. SEAT RAILS HAVE BEEN MODIFIED PER OPTION 2 OF AD 87-(Insert the appropriate identification numbers of this AD.)—(Insert the appropriate identification numbers of this AD.).

(7) Remove the placard when airworthy seat rail parts are installed.

(c) Airplanes may be flown in accordance with FAR 21.197 to a location where this AD may be accomplished.

(d) An equivalent method of compliance with this AD may be used if approved by the Manager, Wichita Aircraft Certification Office, Federal Aviation Administration, 1801 Airport Road, Room 100, Wichita, Kansas 67209; Telephone (316) 946-4400.

BILLING CODE 4910-13-M

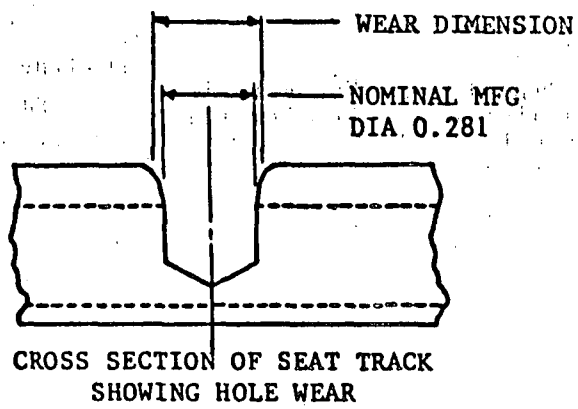

FIGURE 1a

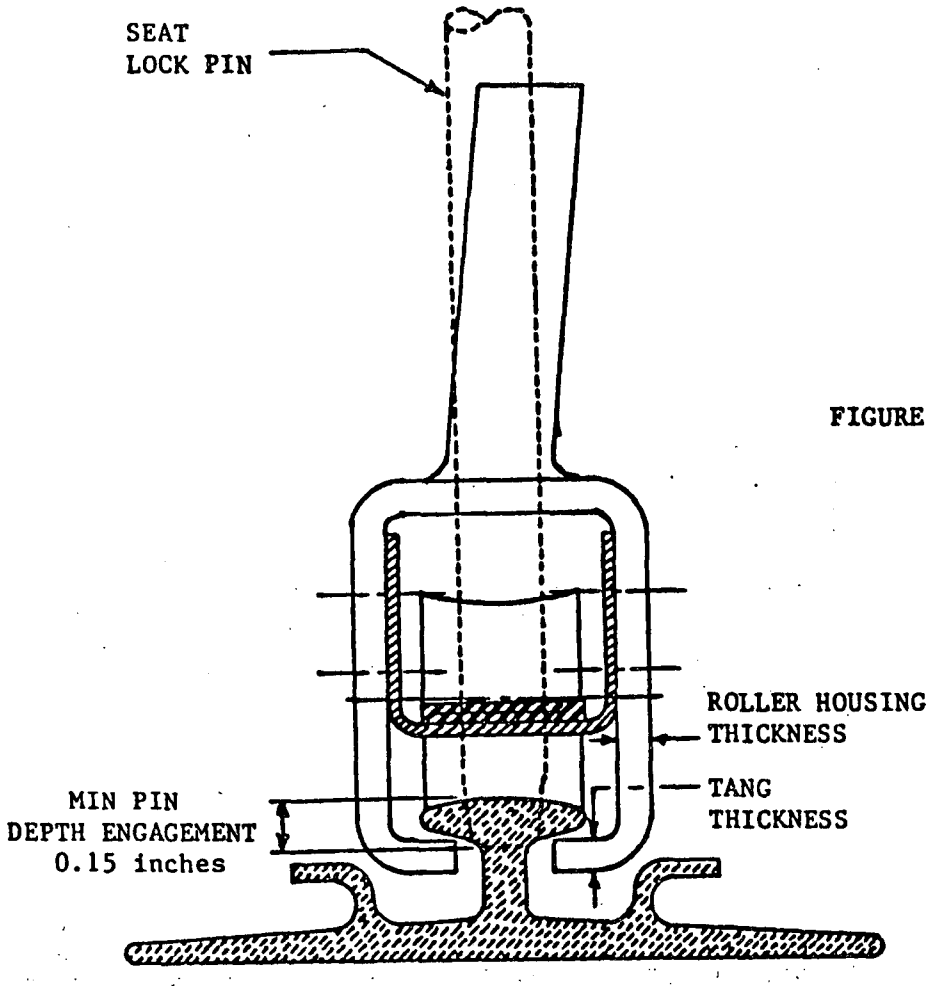

FIGURE 1b

FIGURE 1

BILLING CODE 4910-13-C

All persons affected by this directive may obtain copies of the documents referred to herein upon request to Cessna Aircraft Company, Customer Service, P.O. Box 1521, Wichita, Kansas 67201; or may examine the documents referred to herein at the Federal Aviation Administration, Office of the Regional Counsel, Room 1558, 601 East 12th Street, Kansas City, Missouri 64106.

This amendment becomes effective on October 23, 1987.

Issued in Kansas City, Missouri, on September 8, 1987.

Jerold M. Chavkin,

Acting Director, Central Region.

[FR Doc. 87-21858 Filed 9-22-87; 8:45 am]

BILLING CODE 4910-13-M

---

14 CFR Part 75

[Airspace Docket No. 87-AWA-2]

Alteration of Jet Routes; Expanded East Coast Plan, Phase II

AGENCY: Federal Aviation Administration (FAA), DOT.

ACTION: Final rule.

SUMMARY: This amendment alters the description of only one of eight jet routes located in the vicinity of New York that was published in the notice. This route is part of an overall plan designed to alleviate congestion and compression of traffic in the airspace bounded by Eastern, New England, Great Lakes and the Southern Regions. However, due to numerous technical and administrative problems only J-36 will be implemented at this time. This amendment is a part of Phase II of the Expanded East Coast Plan (EECP); Phase I was implemented February 12, 1987. The EECP is designed to make optimum use of the airspace along the east coast corridor. This action reduces en route and terminal delays in the Boston, MA; New York, NY; Miami, FL; Chicago, IL; and Atlanta, GA, areas, saves fuel and reduces controller workload. The EECP is being implemented in coordinated segments until completed.

EFFECTIVE DATE: 0901 UTC, November 19, 1987.

FOR FURTHER INFORMATION CONTACT: Lewis W. Still, Airspace Branch (ATO-240), Airspace-Rules and Aeronautical Information Division, Air Traffic Operations Service, Federal Aviation Administration, 800 Independence Avenue SW., Washington, DC 20591; telephone: (202) 267-9250.

SUPPLEMENTARY INFORMATION:

History

On July 6, 1987, the FAA proposed to amend Part 75 of the Federal Aviation Regulations (14 CFR Part 75) to alter the descriptions of Jet Routes J-6, J-8, J-14, J-22, J-24, J-30, J-34 and J-36 located in the vicinity of New York (52 FR 25244). Interested parties were invited to participate in this rulemaking proceeding by submitting written comments on the proposal to the FAA. No comments objecting to the proposal were received. However, due to numerous technical and administrative problems, the FAA has determined that only J-36 should be implemented at this time. The other seven jet routes will be delayed until a later date. Except for editorial changes and the omission of seven jet routes, this amendment is the same as that proposed in the notice. Section 75.100 of Part 75 of the Federal Aviation Regulations was republished in Handbook 7400.6C dated January 2, 1987.

The Rule

This amendment to Part 75 of the Federal Aviation Regulations alters the description of only one of eight jet routes located in the vicinity of New York that was published in the notice. This route is part of an overall plan designed to alleviate congestion and compression of traffic in the airspace bounded by Eastern, New England, Great Lakes and the Southern Regions. This amendment is a part of Phase II of the EECP; Phase I was implemented February 12, 1987. The EECP is designed to make optimum use of the airspace along the east coast corridor. This action reduces en route and terminal delays in the Boston, MA; New York, NY; Miami, FL; Chicago, IL; and Atlanta, GA, areas, saves fuel and reduces controller workload. The EECP is being implemented in coordinated segments until completed.

The FAA has determined that this regulation only involves an established body of technical regulations for which frequent and routine amendments are necessary to keep them operationally current. It, therefore—(1) is not a "major rule" under Executive Order 12291; (2) is not a "significant rule" under DOT Regulatory Policies and Procedures (44 FR 11034; February 26, 1979); and (3) does not warrant preparation of a regulatory evaluation as the anticipated impact is so minimal. Since this is a routine matter that will only affect air traffic procedures and air navigation, it is certified that this rule will not have a significant economic impact on a substantial number of small entities under the criteria of the Regulatory Flexibility Act.

List of Subjects in 14 CFR Part 75

Aviation safety, Jet routes.

Adoption of the Amendment

Accordingly, pursuant to the authority delegated to me, Part 75 of the Federal Aviation Regulations (14 CFR Part 75) is amended, as follows:

PART 75—ESTABLISHMENT OF JET ROUTES AND AREA HIGH ROUTES

1. The authority citation for Part 75 continues to read as follows:

Authority: 49 U.S.C. 1348(a), 1354(a), 1510; Executive Order 10854; 49 U.S.C. 106(g) (Revised Pub. L. 97-449, January 12, 1983); 14 CFR 11.69.

§ 75.100 [Amended]

2. Section 75.100 is amended as follows:

J-36 [Amended]

By removing the words "to Huguenot, NY," and substituting the words "Lake Henry, PA; to Sparta, NJ."

Issued in Washington, DC, on September 11, 1987.

Daniel J. Peterson,

Manager, Airspace-Rules and Aeronautical Information Division.

[FR Doc. 87-21852 Filed 9-22-87; 8:45 am]

BILLING CODE 4910-13-M

---

14 CFR Part 75

[Airspace Docket No. 87-AWA-4]

Alteration of Jet Routes; Expanded East Coast Plan, Phase II

AGENCY: Federal Aviation Administration (FAA), DOT.

ACTION: Final rule.

SUMMARY: This amendment alters the descriptions of four of seven jet routes located in the vicinity of New York that were published in the notice. These routes are part of an overall plan designed to alleviate congestion and compression of traffic in the airspace bounded by Eastern, New England, Great Lakes and the Southern Regions. However, due to numerous technical and administrative problems, only J-68, J-75, J-95 and J-106 will be implemented at this time. This amendment is part of Phase II of the Expanded East Coast Plan (EECP); Phase I was implemented February 12, 1987. The EECP is designed to make optimum use of the airspace along the east coast corridor. This action reduces en route and terminal delays in the Boston, MA; New York, NY; Miami,

FL; Chicago, IL; and Atlanta, GA, areas, saves fuel and reduces controller workload. The EECP is being implemented in coordinated segments until completed.

EFFECTIVE DATE: 0901 UTC, November 19, 1987.

FOR FURTHER INFORMATION CONTACT: Lewis W. Still, Airspace Branch (ATO-240), Airspace-Rules and Aeronautical Information Division, Air Traffic Operations Service, Federal Aviation Administration, 800 Independence Avenue SW., Washington, DC 20591; telephone: (202) 267-9250.

SUPPLEMENTARY INFORMATION:

History

On July 6, 1987, the FAA proposed to amend Part 75 of the Federal Aviation Regulations (14 CFR Part 75) to alter the descriptions of Jet Routes J-68, J-75, J-79, J-94, J-95, J-106 and J-109 located in the vicinity of New York (52 FR 25241). Interested parties were invited to participate in this rulemaking proceeding by submitting written comments on the proposal to the FAA. No comments objecting to the proposal were received. However, due to numerous technical and administrative problems, the FAA has determined that only J-68, J-75, J-95 and J-106 should be implemented at this time. The other three jet routes will be delayed until a later date. Except for editorial changes, minor changes to J-68 and J-75 and the omission of three jet routes, this amendment is the same as that proposed in the notice. Section 75.100 of Part 75 of the Federal Aviation Regulations was republished in Handbook 7400.6C dated January 2, 1987.

The Rule

This amendment to Part 75 of the Federal Aviation Regulations alters the descriptions of four of seven jet routes located in the vicinity of New York that was published in the notice. These routes are part of an overall plan designed to alleviate congestion and compression of traffic in the airspace bounded by Eastern, New England, Great Lakes and the Southern Regions. This amendment is a part of Phase II of the EECP; Phase I was implemented February 12, 1987. The EECP is designed to make optimum use of the airspace along the east coast corridor. This action reduces en route and terminal delays in the Boston, MA; New York, NY; Miami, FL; Chicago, IL; and Atlanta, GA, areas, saves fuel and reduces controller workload. The EECP is being implemented in coordinated segments until completed.

The FAA has determined that this regulation only involves an established body of technical regulations for which frequent and routine amendments are necessary to keep them operationally current. It, therefore—(1) is not a "major rule" under Executive Order 12291; (2) is not a "significant rule" under DOT Regulatory Policies and Procedures (44 FR 11034; February 26, 1979); and (3) does not warrant preparation of a regulatory evaluation as the anticipated impact is so minimal. Since this is a routine matter that will only affect air traffic procedures and air navigation, it is certified that this rule will not have a significant economic impact on a substantial number of small entities under the criteria of the Regulatory Flexibility Act.

List of Subjects in 14 CFR Part 75

Aviation safety, Jet routes.

Adoption of the Amendment

Accordingly, pursuant to the authority delegated to me, Part 75 of the Federal Aviation Regulations (14 CFR Part 75) is amended, as follows:

PART 75—ESTABLISHMENT OF JET ROUTES AND AREA HIGH ROUTES

1. The authority citation for Part 75 continues to read as follows:

Authority: 49 U.S.C. 1348(a), 1354(a), 1510; Executive Order 10854; 49 U.S.C. 106(g) (Revised Pub. L. 97-449, January 12, 1983); 14 CFR 11.69.

§ 75.100 [Amended]

2. Section 75.100 is amended as follows:

J-68 [Amended]

By removing the words "; Hancock, NY;" and substituting the words ". From Hancock, NY;"

J-75 [Amended]

By removing the words "INT Carmel 044°" and substituting the words "INT Carmel 045°"

J-95 [Amended]

By removing the words "From Kennedy, NY, via Huguenot, NY," and substituting the words "From Deer Park, NY; INT Deer Park 308° and Binghamton, NY, 119° radials; Binghamton;"

J-106 [Amended]

By removing the words "Sparta, NJ; to Kennedy, NY," and substituting the words "Wilkes-Barre, PA; Stillwater, NJ; to LaGuardia, NY."

Issued in Washington, DC, on September 11, 1987.

Daniel J. Peterson,

Manager, Airspace-Rules and Aeronautical Information Division.

[FR Doc. 87-21851 Filed 9-22-87; 8:45 am]

BILLING CODE 4910-13-M

14 CFR Part 75

[Airspace Docket No. 87-AWA-5]

Alteration of Jet Routes; Expanded East Coast Plan, Phase II

AGENCY: Federal Aviation Administration (FAA), DOT.

ACTION: Final rule.

SUMMARY: This amendment alters the description of one of eight jet routes located in the vicinity of New York that were published in the notice. These routes are part of an overall plan designed to alleviate congestion and compression of traffic in the airspace bounded by Eastern, New England, Great Lakes and the Southern Regions. However, due to numerous technical and administrative problems, only J-152 will be implemented at this time. This amendment is a part of Phase II of the Expanded East Coast Plan (EECP); Phase I was implemented February 12, 1987. The EECP is designed to make optimum use of the airspace along the east coast corridor. This action reduces en route and terminal delays in the Boston, MA; New York, NY; Miami, FL; Chicago, IL; and Atlanta, GA, areas, saves fuel and reduces controller workload. The EECP is being implemented in coordinated segments until completed.

EFFECTIVE DATE: 0901 UTC, November 19, 1987.

FOR FURTHER INFORMATION CONTACT: Lewis W. Still, Airspace Branch (ATO-240), Airspace-Rules and Aeronautical Information Division, Air Traffic Operations Service, Federal Aviation Administration, 800 Independence Avenue SW., Washington, DC 20591; telephone: (202) 267-9250.

SUPPLEMENTARY INFORMATION:

History

On July 8, 1987, the FAA proposed to amend Part 75 of the Federal Aviation Regulations (14 CFR Part 75) to alter the descriptions of Jet Routes J-110, J-121, J-134, J-147, J-149, J-150, J-152 and J-162 located in the vicinity of New York (52 FR 25608). Interested parties were invited to participate in this rulemaking proceeding by submitting written comments on the proposal to the FAA. No comments objecting to the proposal were received. However, due to numerous technical and administrative problems, the FAA has determined that only J-152 should be implemented at this time. The other seven jet routes will be delayed until a later date. Except for editorial changes, and the omission of seven jet routes, this amendment is the

same as that proposed in the notice. Section 75.100 of Part 75 of the Federal Aviation Regulations was republished in Handbook 7400.6C dated January 2, 1987.

The Rule

This amendment to Part 75 of the Federal Aviation Regulations alters the description of only one of eight jet routes located in the vicinity of New York that was published in the notice. This route is part of an overall plan designed to alleviate congestion and compression of traffic in the airspace bounded by Eastern, New England, Great Lakes and the Southern Regions. This amendment is a part of Phase II of the EECP; Phase I was implemented February 12, 1987. The EECP is designed to make optimum use of the airspace along the east coast corridor. This action reduces en route and terminal delays in the Boston, MA; New York, NY; Miami, FL; Chicago, IL; and Atlanta, GA, areas, saves fuel and reduces controller workload. The EECP is being implemented in coordinated segments until completed.

The FAA has determined that this regulation only involves an established body of technical regulations for which frequent and routine amendments are necessary to keep them operationally current. It, therefore—(1) is not a "major rule" under Executive Order 12291; (2) is not a "significant rule" under DOT Regulatory Policies and Procedures (44 FR 11034; February 26, 1979); and (3) does not warrant preparation of a regulatory evaluation as the anticipated impact is so minimal. Since this is a routine matter that will only affect air traffic procedures and air navigation, it is certified that this rule will not have a significant economic impact on a substantial number of small entities under the criteria of the Regulatory Flexibility Act.

List of Subjects in 14 CFR Part 75

Aviation safety, Jet routes.

Adoption of the Amendment

Accordingly, pursuant to the authority delegated to me, Part 75 of the Federal Aviation Regulations (14 CFR Part 75) is amended, as follows:

PART 75—ESTABLISHMENT OF JET ROUTES AND AREA HIGH ROUTES

1. The authority citation for Part 75 continues to read as follows:

Authority: 49 U.S.C. 1348(a), 1354(a), 1510; Executive Order 10854; 49 U.S.C. 106(g) (Revised Pub. L. 97-449, January 12, 1983); 14 CFR 11.69.

§ 75.100 [Amended]

2. Section 75.100 is amended as follows:

J-152 [Amended]

By removing the words "Harrisburg, PA; to INT Harrisburg 099° and Westminster, MD, 058° radials." and substituting the words "to Harrisburg, PA."

Issued in Washington, DC, on September 11, 1987.

Daniel J. Peterson,

Manager, Airspace-Rules and Aeronautical Information Division.

[FR Doc. 87-21850 Filed 9-22-87; 8:45 am]

BILLING CODE 4910-13-M

DEPARTMENT OF ENERGY

Federal Energy Regulatory Commission

18 CFR Part 35

[Docket Nos. RM86-6-004, RM86-6-005, and RM86-6-006; Order No. 474-A]

Construction Work in Progress; Anticompetitive Implications; Rate Schedule Filing

Issued September 17, 1987.

AGENCY: Federal Energy Regulatory Commission, DOE.

ACTION: Final rule; Order granting in part and denying in part requests for rehearing and clarifying prior order.

SUMMARY: On June 18, 1987, the Federal Energy Regulatory Commission issued a final rule (Order No. 474) to revise regulations concerning filings to include costs associated with construction work in progress (CWIP) in the rate base of public utilities, under Part II of the Federal Power Act, pursuant to a remand of the Commission's prior CWIP rule (Order No. 298) by the United States Court of Appeals for the District of Columbia Circuit. The court affirmed in part, but vacated in part, Order No. 298, while expressing concerns about the anticompetitive implications of CWIP in rate base. *Mid-Tex Electric Cooperative, Inc. v. FERC*, 773 F.2d 327 (1985).

In this order, the Commission grants in part and denies in part requests for rehearing and clarifies parts of Order No. 474.

EFFECTIVE DATE: October 23, 1987.

FOR FURTHER INFORMATION CONTACT:

Legal Information

Andre Goodson, Federal Energy Regulatory Commission, Office of the General Counsel, 825 North Capitol Street NE., Washington, DC 20426, (202) 357-8467.

Technical Information

Eliot Wessler, Federal Energy Regulatory Commission, Office of Economic Policy, 825 North Capitol Street NE., Washington, DC 20426, (202) 357-8286.

SUPPLEMENTARY INFORMATION:

United States of America Federal Energy Regulatory Commission

Electric Rates: Construction Work in Progress; Rehearing; Clarification; Price Squeeze; Double Whammy; Order Granting in Part and Denying in Part Requests for Rehearing, and Clarifying Prior Order

I. Introduction

The Commission grants in part requests for rehearing of its final rule concerning construction work in progress (CWIP) in rate base. The order on rehearing adopts two revisions to the final CWIP rule. First, the definition of CWIP at § 35.26(b)(1) of the regulations is modified to make it clear that "CWIP" refers to expenditures that would otherwise be eligible for allowance for funds used during construction (AFUDC) treatment. Second, § 35.26(g)(2) of the regulations is revised by adding that whether or not preliminary relief is granted at the suspension stage of a rate proceeding will not preclude consideration of further remedies later in the proceeding, if warranted. The order on rehearing also clarifies parts of Order No. 474 and denies rehearing on the remaining issues.

II. Background

On June 18, 1987, the Commission issued a final rule adopting revised regulations concerning filings to include costs associated with CWIP in rate base.[1] The final rule was issued pursuant to a remand of the Commission's prior CWIP rule [2] from the United States Court of Appeals for the District of Columbia Circuit in *Mid-Tex Electric Cooperative, Inc. v. FERC*, 773 F.2d 327 (1985) *(Mid-Tex I)*. The *Mid-Tex I* remand required the Commission to address the court's concerns about the anti-competitive implications of allowing up to 50% of non-pollution control/fuel conversion CWIP in rate base.[3] Order No. 474

[1] Order No. 474, 52 FR 23948 (June 26, 1987), III FERC Statutes and Regulations ¶ 30,751 (1987).

[2] Order No. 298, 48 FR 24323, FERC Statutes and Regulations (Regulations Preambles 1982-1985) ¶ 30,455 (1983), *order on reh.*, Order No. 298-A, 48 FR 46012, FERC Statutes and Regulations (Regulations Preambles 1982-1985) ¶ 30,500 (1983), *clarified*, Order No. 298-B, 48 FR 55281, FERC Statutes and Regulations (Regulations Preambles 1982-1985) ¶ 30,524 (1983).

[3] Subsequent to the *Mid-Tex I* remand, the Commission adopted procedures to address

Continued

continued the Commission's policy of allowing utilities to request up to 50% of non-pollution control/fuel conversion CWIP in rate base. However, pursuant to the *Mid-Tex I* remand, Order No. 474 additionally provided for filing requirements and procedures designed to address, mitigate, remedy and/or prevent non-pollution control/fuel conversion CWIP-related price squeeze and double whammy.

Under Order No. 474, the Commission required for each CWIP project for which rate base treatment is requested, the application of forward-looking allocation ratios reflecting the customers' anticipated annual use of the utility system over the service life of the CWIP project in order to properly recognize and account for the customers' plans for alternative power supplies. The Commission took this action to prevent double whammy and to improve the measurement and non-pollution control/fuel conversion CWIP-induced price squeeze.

The Commission also required the utility seeking to include non-pollution control/fuel conversion CWIP in rate base to submit with its rate application a comparison of the percentages of non-pollution control/fuel conversion CWIP allowed by the relevant retail jurisdiction with that requested by the applicant in its rate application before the Commission. Where the CWIP percentage requested before the Commission exceeds that incorporated in the competing retail rate, an earned rate of return comparison is additionally required in order to assist the Commission in determining the existence and extent of potential non-pollution control/fuel conversion CWIP-incuded price squeeze at the suspension stage. For any such CWIP-induced regulatory price squeeze, the Commission stated that it will, on a case-by-case basis, balance the benefit to the public interest of remedying the price squeeze against the benefit to the public interest of applying the CWIP rule without any modification to remedy such price squeeze.

On July 20, 1987, timely requests for rehearing Order No. 474 were filed by New England Power Company (NEP), Public Systems, and National Rural Electric Cooperative Association, *et al.* (NRECA).[4] An order granting rehearing for the purpose of further consideration was issued on August 12, 1987.

III. Discussion

A. Issues Previously Fully Addressed

Several rehearing issues raised by NRECA and Public Systems have been fully addressed in prior CWIP orders. Accordingly, the Commission denies the requests for rehearing of the following issues.

1. Allowances of Up to 50% Non-Pollution Control/Fuel Conversion CWIP in Rate Base

Public Systems and NRECA assert that the Commission failed to reconsider its fundamental policy of allowing up to 50% of non-pollution control/fuel conversion CWIP in rate base as allegedly required by the *Mid-Tex I* remand. The *Mid-Tex I* court required the Commission to reconsider its fundamental policy of allowing up to 50% non-pollution control/fuel conversion CWIP in rate base unless the Commission reasonably determined that the CWIP rule would have no significant anticompetitive effects, *or* unless it convincingly explained why it can consider those effects on a case-by-case basis.[5] In response, the final rule explained why and how the Commission would address CWIP-related price squeeze on a case-by-case basis,[6] and it provided a generic means for preventing double whammy.[7]

2. Examination of the Bulk Power Market

Public Systems also contend that the Commission did not respond to their suggestion that a utility filing for CWIP be required to demonstrate that its customers have adequate access to power pools and alternative capacity sources. Public Systems assert that CWIP is anticompetitive where this kind of flexibility does not exist. They reassert their criticism that the Commission has failed to examine the competitive forces at work in the bulk power market.

The *Mid-Tex I* court criticized the Commission for not considering double whammy as an objection to its CWIP policy or evaluating the scope of the double whammy problem. It was in that context that the court required the Commission to explain why an assessment of prevailing market conditions was infeasible or unnecessary.[8] In Order No. 474, the Commission concluded that the requirement to file life-cycle forward looking allocation ratios with all CWIP rate applications will prevent double whammy situations regardless of the number of wholesale customers engaged in the pursuit of alternative supply options. Thus, the Commission concluded that no examination of the bulk power market was necessary.[9]

3. Joint Ventures

With respect to joint ventures, Public Systems state that they cannot accept the Commission's statement that it has no preference for joint venture financing over CWIP financing. They allege that the failure to address the issue in Order No. 474 directly contradicts the *Mid-Tex I* mandate. NRECA also repeats its request tht offers to customers of participation in joint ventures be made a condition precedent to a utility being allowed to collect CWIP.

The Commission believes that Order No. 474 satisfies *Mid-Tex I* by addressing the issue of the effect of the rule on wholesale customers' ability to enter into joint ventures. As the Commission stated in Order No. 474, the Commission considers the final rule to be neutral in its effect on wholesale customers' ability to enter into joint ventures with utilities.[10] Under the final rule, customers engaged in joint ventures will not be penalized, *i.e.*, they will not have to pay CWIP-based rates that reflect the use of facilities that those customers are not projected to use. *Mid-Tex I* did not mandate that the Commission go further and adopt a rule that encourages joint ventures over CWIP.[11]

4. CWIP Is Not A Subsidy To Utilities

Public Systems contend that the final rule does not address their argument that CWIP gives utilities an improper advantage over all potentially competing power suppliers via subsidized financing.

---

anticompetitive implications of CWIP on an interim basis and invited comments to assist in its consideration of a final rule. Order No. 448, 51 FR 7774, III FERC Statutes and Regulations ¶ 30,689 (1986), *reh. denied*, 35 FERC ¶61,328 (1986), *affirmed*, Mid-Tex Electric Cooperative, Inc. v. FERC, 822 F.2d 1123 (D.C. Cir. 1987) *(Mid-Tex II)*.

[4] National Rural Electric Cooperative Association, American Public Power Association, Golden Spread Electric Cooperative, Inc., the members of Golden Spread Electric Cooperative, Inc., the full requirements customers of Southwestern Public Service Company, Mid-Tex Electric Cooperative, Inc., and Magic Valley Electric Cooperative, Inc., jointly filed a request for rehearing.

[5] 773 F.2d at 362.

[6] 52 F.R. 23952–57, III FERC Statutes and Regulations ¶ 30,751 at 30,707–14.

[7] 52 F.R. 23958–60, III FERC Statutes and Regulations ¶ 30,751 at 30,714–18.

[8] 773 F.2d at 358–59.

[9] 52 F.R. 23960, III FERC Statutes and Regulations ¶ 30,751 at 30,718.

[10] 52 F.R. 23961, III FERC Statutes and Regulations ¶ 30,751 at 30,720.

[11] With respect to requiring offers of joint ventures, NRECA repeats an argument made on appeal of Order No. 298. That argument was rejected in *Mid-Tex I* where the court acknowledged that the Commission probably lacks authority to compel utilities to enter into joint ventures. 773 F.2d at 361.

The basis for Public Systems' argument appears to be that a utility receives a subsidy—and, thus, an advantage over wholesale customers—if the utility's wholesale rates reflect its CWIP projects while the wholesale customers' rates do not reflect customer-sponsored CWIP projects.[12] However, recovery of CWIP dollars (as opposed to AFUDC) involves the timing of the recovery of revenues. It does not result in greater recovery of revenues. Therefore, CWIP does not represent a subsidy to the utility, because the utility is collecting revenues that it is entitled to, only sooner than under AFUDC. Further, with CWIP in rate base, a utility's financing costs may be reduced, thus reducing the cost of its CWIP project. Such a result mitigates the bias against construction of new generating facilities (one of the CWIP rule's public interest objectives) [13] rather than subsidizes utilities.

Moreover, there is no subsidy to wholesale customers under Order No. 474, since adoption of forward looking allocation ratios is designed to prevent cross-subsidization of some wholesale customers by other wholesale customers by allocating CWIP based on projected use of CWIP projects.

5. Investment Risk

Public Systems reiterate their argument that CWIP improperly masks from utility management information about investment risk. They argue that CWIP creates a bias in favor of overbuilding. Public Systems' argument was a fundamental policy objection to one of the CWIP rule's public interest objectives, *i.e.*, mitigating any bias against the construction of new generating facilities. However, the Commission was not revisiting this issue in the interim CWIP rule (Order No. 448). Indeed, Public Systems' argument was made in response to a question concerning whether modification of the 50 percent cap might be an appropriate remedy if the interim rule would cause price squeeze or double whammy.[14] Further, the *Mid-Tex I* court affirmed the Commission's underlying policy objective of mitigating investment bias. *See* 773 F.2d at 344.

6. Addressing Anticompetitive Effects at the Rulemaking Stage

Generally, NRECA criticized the Commission for not addressing the anticompetitive implications of CWIP at the rulemaking stage rather than in individual cases.

NRECA is wrong when it argues that Order No. 474 did not address anticompetitive effects generically. Order No. 474 rule expressly considered anticompetitive concerns generally with regard to double whammy.[15] With respect to price squeeze, Order No. 474 requires all CWIP applicants to file data enabling all parties and the Commission to evaluate at the suspension stage of a proceeding the possibility of CWIP-related regulatory price squeeze resulting from different state/Federal ratemaking policies regarding CWIP applicants' rates.[16]

7. Burden of Proof Regarding Price Squeeze

Public Systems argue that Order No. 474 did not adequately explain why the Commission rejected their proposal that utilities requesting CWIP be required to prove that the rates filed for will not result in a price squeeze. In Order No. 474, the Commission determined that, based on its experience with filings made under Order No. 298 (the 1983 CWIP rule) and Order No. 448 (the interim CWIP rule), it was not possible to say that the CWIP rule would have a generic price squeeze effect. Thus, the Commission was justified in its decision not to require a detailed, comprehensive price squeeze analysis with every CWIP filing because that would presume a generic price squeeze effect.[17] Further, the final rule provides for the submission of sufficient data in every CWIP filing to enable the parties and the Commission to evaluate at the suspension stage of a proceeding the *potential* for price squeeze related to non-pollution control/fuel conversion CWIP. (*See* 18 CFR 35.26(g)(1) (1987).)

8. Interim Relief

Public Systems insist that the Commission must define the circumstances under which it will provide interim price squeeze relief,[18] and then promulgate filing regulations that ensure the availability of information sufficient to permit customers to make the required showing. The Commission rejected this argument in Order No. 474, stating that it was allowing for considerable flexibility regarding what a customer may show in support of an allegation of imminent, irreparable harm and that such flexibility was consistent with the case-by-case approach to addressing the price squeeze implications of CWIP.[19]

B. Price Squeeze

1. Scope of Price Squeeze Issue

Public Systems and NRECA request that the final rule address the issue of price squeeze generally, *i.e.*, whether or nor CWIP is involved, rather than limit itself to purely regulatory price squeeze. The Commission indicated in Order No. 474 that it was considering general price squeeze in *Southern California Edison Company*, Docket Nos. ER76-205-003 (Price Squeeze Phase) and ER79-150-000 (Phase II, Price Squeeze) and confined itself in the final rule to dealing with non-pollution control/fuel conversion CWIP-related regulatory price squeeze.[20] The Commission plans to issue an opinion in Docket No. ER76-205-003 in the near future.

2. Price Squeeze Relief

NRECA asserts that it appears that the Commission does not intend to address potential price squeeze, but rather will consider relief only after an actual price squeeze has been proven. NRECA submits that it would be contrary to *Mid-Tex I* to limit consideration of price squeeze relief to such an indeterminate time in the future.

NRECA's assertion that the Commission will consider CWIP-related price squeeze relief only after an actual price squeeze has been proven is erroneous. The final rule retains the interim rule's provision that the Commission *will* consider preliminary (*i.e.*, prior to the establishment of effective dates for the CWIP-based rates as well as before actual price squeeze has been proven) relief at the suspension stage of a proceeding

[12] Public Systems cite no statistics concerning how many wholesale customers reflect CWIP in their retail rates. However, in approximately 40 states, state regulatory commissions have little or no jurisdiction over retail rates set by municipal utilities. Therefore, those municipal utilities are free to reflect CWIP in their rates. Similarly, in approximately half of all states, state regulatory commissions have little or no jurisdiction over retail rates set by cooperatively-owned utilities. *See* 1984 Annual Report on Utility and Carrier Regulation, National Association of Regulatory Utility Commissioners, Table 3, p. 421.

[13] *See* 52 F.R. 23950, III FERC Statutes and Regulations ¶ 30,751 at 30,703 *See also* Order No. 298, 48 F.R. 24,329, FERC Statutes and Regulations (Regulations Preambles 1982-1985) ¶ 30,455 at 30,497 (1983) and *Mid-Tex I*, 773 F.2d at 345.

[14] *See* Order No. 448 51 F.R. 7778-79, III FERC Statutes and Regulations ¶ 30,689 at 30,144.

[15] 52 F.R. 23960, III FERC statutes and Regulations ¶ 30,751 at 30,718.

[16] *See* § 35.26(g)(1), 18 CFR 35.26(g)(1) (1987).

[17] *See* 52 FR. 23954, 23962, III FERC Statutes and Regulations ¶ 30,751 at 30,709, 30,722.

[18] Section 35.26(g)(2) of the regulations, 18 CFR 35.26(g)(2) (1987), adopted by the final rule, provides that the Commission will consider preliminary relief at the suspension stage of a proceeding upon a showing of imminent, irreparable harm to the wholesale customer if the requested CWIP is allowed.

[19] 52 FR 23962, III FERC Statutes and Regulations ¶ 30,751 at 30,722.

[20] 52 FR. 23963, III FERC Statutes and Regulations ¶ 30,751 at 30,722.

involving non-pollution control/fuel conversion CWIP-based rates. Thus, a wholesale customer could, upon a proper showing of imminent, irreparable harm, avoid paying all, or some portion, of the proposed rate level reflecting non-pollution control/fuel conversion CWIP during the length of the rate proceeding even if the price squeeze is never ultimately proven. Further, as discussed below, the Commisssion will consider interim relief later in the proceeding, if warranted. However, consideration of ultimate price squeeze relief must necessarily follow a determination of actual overall price squeeze, which itself will typically come after the establishment of a preliminary just and reasonable (but for price squeeze) rate.[21] NRECA cites no language in *Mid-Tex I* requiring a final price squeeze determination before the determination of preliminary just and reasonable rates has been made.

3. Imminent, Irreparable Harm Standard for Interim Relief

NRECA also contends that the standard for relief—imminent, irreparable harm—is too stringent. Further, NRECA suggests that allegations of imminent, irreparable harm should not be restricted to being made in the customer's initial pleading. NRECA argues that a customer should be allowed to request interim relief anytime during a proceeding.

With respect to the imminent, irreparable harm standard, NRECA suggests that a wholesale customer may not be able to make a concrete, substantive showing that irreparable harm is imminent unless the customer is "on the verge of competitive disaster—often past the point where the situation can be turned around." NRECA further contends that the nature of the anticompetitive injury, *i.e.*, the loss of existing or potential new customers or the takeover of the wholesale customer, is such that the harm cannot be remedied once concrete evidence of its imminent occurrence is available.

The Commission disagrees with this statement. The final rule provides for the consideration of preliminary relief at the suspension stage of a proceeding—*before* the CWIP-based rate at issue has been collected. Thus, if the wholesale customer is already on the verge of competitive disaster at the time a utility seeks CWIP-based rates, the CWIP requested could not have been the cause of the customer's situation. However, a showing that the customer is on the verge of "competitive disaster" would be taken into account by the Commission in determining whether allowing CWIP to be collected would bring about further imminent, irreparable harm. The Commission further notes that the CWIP rule does not limit interim relief to such circumstances. The provision for interim CWIP relief was not intended to improve the existing competitive position of a wholesale costomer which came to be in such a position due to factors other than the rate applicant's proposed CWIP. Instead, interim relief is a preventive measure designed to mitigate the potential anticompetitive effects, if any, of proposed CWIP.

4. Rationale for the Imminent, Irreparable Harm Standard

NRECA also disputes the bases cited in Order No. 474 for the imminent, irreparable harm standard,[22] arguing that: (1) There can be no permanent loss of revenues to the utility, because disallowed CWIP would be rebooked as AFUDC, and recovery of revenues would be deferred, not forsaken; and (2) the number of settled CWIP cases is not necessarily indicative that most CWIP allegations are unfounded. Thus, NRECA argues that the standard for interim relief is unsupported.

On the first point, NRECA's argument does not account for the fact that under § 35.26(g)(4)(i), 18 CFR 35.26(g)(4)(i) (1987), one form of iterim relief at the Commission's disposal is suspension of the entire rate increase for up to five months. Such action regarding the portion of the rate increase not based on CWIP would constitute a permanent loss of revenues to the utility. Thus, the final rule's statement is supported. However, to the extent that collection of the CWIP-based portion of the proposed rate alone is deferred,[23] the corresponding return component of the CWIP disallowance would be booked as AFUDC. This is discussed in more detail below in the discussion of CWIP filing requirements. On the second point, NRECA raises no issues which were not thoroughly addressed in the final rule. Thus, the Commission finds no basis for granting rehearing of this issue.

Concerning NRECA's argument that a customer should be permitted to request interim relief anytime during a proceeding, the Commission clarifies the final rule by stating, as the interim rule stated,[24] that whether or not relief is granted at the suspension stage will not preclude the possibility of interim relief sometime later in the proceeding, if warranted. A new sentence to this effect is added to § 35.26(g)(2).

5. Data for Price Squeeze Analysis

NRECA argues that pollution control and fuel conversion CWIP should be included in the CWIP rate applicant's price squeeze analysis, adding that most states do not systematically distinguish pollution control/fuel conversion CWIP allowances in retail rate base from non-pollution control/fuel conversion CWIP allowances in retail rate base. NRECA also contends that, in order to permit a meaningful comparison between wholesale and retail rates, the retail CWIP identified must be functionalized, *i.e.*, grouped according to the specified function of such facilities. It states that some state commissions limit CWIP to short term projects. Typically, short term CWIP projects would be distribution or general plant facilities, to which the wholesale customers have little or no cost responsibility, according to NRECA.

At issue in *Mid-Tex I* was the change from the financial distress test for allowing non-pollution control/fuel conversion CWIP under the Commission's CWIP policy under Order No. 555[25] to a policy of allowing up to 50 percent non-pollution control/fuel conversion CWIP in rate base. The *Mid-Tex I* decision did not hold that there were anticompetitive implications involved with pollution control or fuel conversion CWIP. The *Mid-Tex I* remand only required the Commission to consider the anticompetitive implications of non-pollution control/fuel conversion CWIP. Further, if pollution control/fuel conversion CWIP is alleged to contribute to price squeeze in a given case, such an allegation could be properly considered pursuant to the Commission's general price squeeze policy.

Regarding the alleged failure of most states to segregate allowed retail CWIP into pollution control/fuel conversion CWIP and non-pollution control/fuel conversion CWIP, the Commission

[21] The Commission's policy and practice of phasing the price squeeze issue was established in Arkansas Power and Light Company, 8 FERC ¶ 61,131 (1979).

[22] *See* 52 FR 23962, III FERC Statutes and Regulations ¶ 30,751 at 30,722, where the Commission cited potential lost revenues and the number of cases in which CWIP-related price squeeze was alleged in initial pleadings, but the cases later settled, in support of adopting a high standard for interim relief.

[23] *See* § 35.26(g)(4) (i) and (ii) of the Commission's regulations, 18 CFR 35.26(g)(4) (i) and (ii) (1987). The regulatory text also appears at 52 FR 23966, I FERC Statutes and Regulations ¶ 13,976 at 11,350.

[24] 51 FR 7778, III FERC Statutes and Regulations ¶ 30,689 at 30,144.

[25] 41 FR 51392, 56 FPC 2,939 (1976), *order on reh.*, 42 FR 3022, 57 FPC 6 (1977), *aff'd sub nom. without opinion*, Ogelthorpe Electric Membership Corp. v. FERC, 574 F.2d 83 (D.C. Cir. 1978).

believes that the utility should be able to do so itself for the purpose of preparing a proper wholesale/retail CWIP percentage comparison. It must do so because of the requirement to accurately track the amounts of investment in each CWIP project receiving rate base treatment, due to the accounting prohibitions on the capitalization of AFUDC on that CWIP, and accounting regulations regarding the determination of the original cost of the project which is eventually recorded as plant-in-service, and included in rate base. NRECA also appears to suggest that by properly functionalizing retail CWIP, this will lead to lower indicated retail CWIP percentage allowances, and thus a utility may be entitled to less wholesale CWIP in rate base. However, under the CWIP rule, after proper functionalization to determine the relative CWIP allowances, it is the overall retail and wholesale CWIP percentages that are compared.

6. Whether the CWIP Rule Has a Generic Price Squeeze Effect

NRECA repeats its request that a CWIP applicant be required to submit a comprehensive price squeeze analysis in order to provide sufficient data for customers to establish price squeeze, and the injury resulting therefrom, in their initial pleadings. NRECA also takes exception to the Commission's argument that most states allow some CWIP in the rate base of utilities. NRECA contends that, based upon an evaluation of a Salomon Brothers Inc. report, no state allows CWIP in rate base on a basis remotely similar to that of the Commission. NRECA also claims the fact that most rate proceedings involving a request for CWIP are settled does not constitute evidence of the absence of price squeeze at the outset of those cases.

The Commission disagrees with these arguments. In Order No. 474, the Commission concluded that, based on its experience with CWIP filings under Order Nos. 298 and 448, it was not possible to say that the CWIP rule will have a generic price squeeze effect, especially in view of the fact that most states allow at least some CWIP.[26] The Commission's statement was based in part upon an examination of information contained in the September 2, 1986, Salomon Brothers Inc. Electric Utility Regulation—Semiannual Review.[27] A review of the more recent February 2, 1987 Salomon Brothers report indicates no change in this CWIP status.

Regarding the settlement of rate applications which include requests for CWIP, if the CWIP-related price squeeze issue is routinely settled before it reaches the Commission for final determination, there is no basis for the Commission to conclude, based on its experience, that CWIP generically induces price squeeze. In any event, most wholesale rate applications do not reflect non-pollution control/fuel conversion CWIP in rate base. For those rate applications that do, the final rule generically requires the filing of data which would indicate the potential for non-pollution control/fuel conversion CWIP-related regulatory price squeeze, and the rule provides for the consideration of remedies where such CWIP-related regulatory price squeeze is present.

There is other evidence that the CWIP rule does not lead to generic price squeeze. To the extent there has always been a return on wholesale CWIP, there is a corresponding reduction in the AFUDC that otherwise eventually finds its way into wholesale rate base. In addition, many return classes tend to have a high concentration of distribution facilities while wholesale classes do not. Consequently, even if states limit non-pollution control/fuel conversion CWIP to lower percentages than the Commission allows, the impact of the distribution portion of that CWIP in rate base may be higher on retail rates for lower voltage customers. This is because wholesale customers typically provide their own distribution facilities. Therefore, there may not necessarily be a price squeeze where there is a difference in CWIP percentages. Further, the Commission's policy concerning non-pollution control/fuel conversion CWIP does not mandate CWIP. Rather, it permits utilities to request and support amounts *up to* 50 percent of allocable non-pollution control/fuel conversion CWIP which amounts may or may not exceed the percentage allowed by the relevant state commission for the CWIP applicant's retail rates. Thus, there are several indicators that the Commission's CWIP rule does not tend to generically result in price squeeze, either at the outset or the conclusion of rate applications.[28] And, in those cases where a request for non-pollution control/fuel conversion CWIP results in a price squeeze, the procedures specified in the final rule are, in the Commission's opinion, adequate to mitigate any anticompetitive effects of the CWIP request.

C. Filing Requirements

1. The Prospective Effect of Order No. 474

NRECA asserts that the Commission should order refunds of CWIP dollars collected pursuant to Order Nos. 298 and 448, because Order No. 298 was remanded and Order No. 448 is, in NRECA's view, defective.[29]

Public Systems request that all pending CWIP cases be made subject to the standards of Order No. 474, *i.e.*, that utilities now collecting CWIP-based rates, subject to refund, be directed to refile rates reflecting the new allocation procedures. In support of their position, they contend that *Mid-Tex II* permitted rate cases under the vacated Order No. 298 CWIP regulations to go forward under the standards set forth in the interim rate (Order No. 448).

In view of the fact that neither *Mid-Tex I* nor *Mid-Tex II* mandated refunds of CWIP dollars pending consideration of the anticompetitive implications of CWIP, NRECA's argument is unsupported. Concerning Public Systems' argument, the interim CWIP procedures were designed to allow non-pollution control/fuel conversion CWIP applications to continue to be filed and provide procedures for anticompetitive issues to be addressed in those prospective CWIP cases while the Commission reviewed comments to the interim rule and considered a final rule. The interim rule had no retroactive effect on Order No. 298 cases. Although the final rule was designed to address the anticompetitive concerns identified by the *Mid-Tex I*, court, the final rule, like the interim rule, has no retroactive effect. If any pending cases under Order Nos. 298 and 448 reach the Commmssion for a final determination, Order No. 474 will serve as a guide to resolution of

[26] 52 F.R. 23954, III FERC Statutes and Regulations ¶ 30,751 at 30,709.

[27] This report indicated that 31 state commissions allowed at least some CWIP including: Two which limited it to pollution control amounts; one which permitted "short term" projects; one which allowed projects completed when rates are effective; one which allowed projects commenced and completed within one year; one which allowed projects 75 percent complete; one which permitted CWIP for financial integrity; one which permitted projects in service at the time of hearing; and one which allowed 70 percent CWIP. One other state commission allowed CWIP for "emergencies."

[28] The Commission believes that it was unnecessary to perform an update of the simulation study which was filed in support of the 1983 CWIP rule (Order No. 298) in order to support this conclusion. Rather, the evidence cited above tended to support the final rule's conclusion.

[29] NRECA acknowledges that *Mid-Tex II* affirmed Order No. 448. NRECA states that it is restating its argument against Order No. 448 in this rehearing in order to preserve its rights in the event that *Mid-Tex II* is modified.

anticompetitive issues.[30] Accordingly, the Commission denies the requests for rehearing.

2. CWIP Accounting Issues

NRECA requests that the final rule be clarified to state that AFUDC offsets should be tied to the amount of CWIP in rate base in order to prevent double recovery, and to prevent any recovery on ineligible CWIP items. NRECA contends that either CWIP in rate base should: (1) Be defined (a) to exclude contract retentions (payments held back pending satisfactory completion) and work orders closed but not cleared (amounts recorded in Account 107, Construction work in progress, but not yet recorded Account 106, Completed construction not classified—Electric), or (b) as items upon which AFUDC may otherwise be accrued; or (2) the Commission should reduce AFUDC corresponding to amounts of CWIP granted rate base treatment.

The request for clarification is granted as follows. In Order No. 298 (the 1983 CWIP rule), the Commission explained its positions regarding the use of monthly average CWIP balances, its assumption of the amount of CWIP in rate base for settlement purposes in the absense of any specific reference to the amount of CWIP in rate base, and AFUDC calculations.[31] The Commission adopts and incorporates by reference those positions on those accounting issuess for purposes of the final rule. Concerning AFUDC specifically, under the final rule, utilities must provide accounting procedures to ensure that wholesale customers will not be charged for both capitalized AFUDC and corresponding amounts of return on CWIP proposed to be included in rate base.

With respect to alleged ineligible CWIP items, the Commission notes that short-term CWIP (projects lasting 30 days or less) would be eligible for AFUDC capitalization in the absence of rate base treatment. Thus, as CWIP items, they are also eligible for rate base treatment to the extent the average monthly rate base gives them some small effect as CWIP. For CWIP items closed but not cleared, to the extent a utility fails to clear these items out of Account 107, Construction Work In Progress into Account 106, Completed Construction Not Classfied-Electric, the utility is merely forestalling full rate base treatment on these to its own disadvantage.

For the contract retention problem, to ensure that return on CWIP in rate base and AFUDC on CWIP do not produce a double recovery, the Commission believes that the best approach is to define CWIP in terms of amounts that are otherwise eligible for AFUDC treatment. Accordingly, the definition of CWIP in the final rule is modified to conform the amounts eligible for inclusion in rate base consistent with the base upon which AFUDC would have been calculated had the CWIP amounts not received rate base treatment.

D. Double Whammy

1. Obligation to Serve

NEP and NRECA raise several issues with respect to a utility's obligation to serve wholesale customers.

a. *Notice of Termination.* While NEP does not seek rehearing or any changes in the substance of the final CWIP rule,[32] it requests rehearing and clarification of some aspects of the final rule's discussion of a utility's obligation to serve wholesale customers.[33] Where the final rule states that an existing customer may avoid CWIP payments where it has made "good faith representations" of its intent to take power entirely or in part from other sources, NEP requests clarification whether the Commission views such representations as the same as formal notices of termination under the applicable wholesale tariffs. NEP submits that formal notices of termination should be required.

The Commission disagrees with NEP. The Commission does not believe that, where the contract between the parties does not so provide, the wholesale customer should, as a general proposition, be required to formally agree to termination of service in order to avoid CWIP payments.[34] However, the Commission recognized in Order No. 474 that a customer who has represented that it will take power from another source and thus avoids paying CWIP has agreed to give up its traditional service and is willing to accept continued service only on a best efforts basis. The utility may incur extra costs in continuing to serve the customer whose alternative supply plans fall through and who changes it mind about leaving before the specified date and such costs should be properly recovered from the customer. 52 F.R. 23961, III FERC Statutes and Regulations ¶ 30,751 at 30,719.

b. *The "Prodigal" Customer.* With respect to the "prodigal customer" who leaves the system in whole or in part and later wishes to resume service from its former supplier or increase service from its then current partial requirements supplier, NEP says it presumes that, since the final rule found no obligation to begin serving a customer, a utility does not have the obligation to resume service in such a situation. NEP requests clarification of this aspect of the final rule.

The Commission wants to make clear that the final rule referred to two types of prodigal customers: (1) One which went off-system completely and later wants to resume service for all or part of its load; and (2) one which went off-system to meet part of its load and later wants to increase its remaining service

[30] The Commission notes that there are only eight proceedings pending which concern CWIP applications made under Order Nos. 298 and 448 (Southwestern Electric Power Company, Docket No. ER87-542-000; NEP, Docket No. ER86-687-000; Virginia Electric Power Company, Docket No. ER86-372-000; Southwestern Public Service Company, Docket No. ER84-604-000; Southwestern Electric Power Company, Docket Nos. ER85-468-000 and ER86-506-001 [procedural schedule suspended pending settlement negotiations]; Southern California Edison Company, Docket No. ER84-75-000; and Utah Power & Light Company, Docket No. ER84-571-000).

[31] *See* 48 FR 24352-53, FERC Statutes and Regulations (Regulations Preambles 1982-1985) ¶ 30,455 at 30,541-42, footnotes 104, 105, 108, and 109.

[32] NEP informed the Commission of a minor error with respect to a reference to NEP in the Background section in Order No. 474. At page 30,705 of the final rule (52 FR 23951), the order indicated that NEP only made wholesale sales to affiliates. NEP informed the Commission that it makes sales to affiliate and non-affiliate customers under the same wholesale tariff. Also, at page 30727, footnote 26, of the final rule (52 F.R. 23951), the final rule stated that NEP had withdrawn its phase II rates which included CWIP for Seabrook I in rate base. Although NEP has withdrawn its phase II Rate W-8(b), that rate actually included Seabrook I entirely in rate base as an in-service plant. NEP's currently effective phase I Rate W-8(a) includes Seabrook I CWIP in rate base and has not been withdrawn.

[33] *See* 52 F.R. 23960-61, III FERC Statutes and Regulations ¶ 30,751 at 30,718-20 in which the Commission stated that, unlike state statutes granting utilities their franchises, there is no express obligation to serve wholesale customers under the Federal Power Act.

[34] This is not to suggest that it may not be appropriate for utilities whose customers have represented their intent to purchase power from other sources to request a Commission order permitting the termination in advance of a date near the time service to the customer is planned to be terminated (*see* 18 CFR 35.4 and 35.11 (1987)). For example, a customer may provide its supplier with a good faith representation that it will take service from an alternative supplier in 10 years. Absent waiver of the notice requirements, the utility could not seek Commission approval to terminate its service responsibilities to the customer until, at the earliest, 120 days prior to the date the customer is projected to begin taking service from the alternative supplier. However, the utility may need certainty at an earlier date that the capacity it expects to have in 10 years (which is currently used to serve the terminating customer) is available in order, for example, to market that capacity to potential new customers. Under those circumstances, it would appear to be appropriate for the utility to file a request for a Commission order permitting the termination of service.

(*i.e.*, incremental load growth above and beyond normal load growth).

In the first case, the Commission believes that there is no obligation to resume service to the prodigal customer once the Commission has permitted the service to be terminated, just as there is no obligation to begin serving a completely new customer, absent a showing under section 202(b) of the Federal Power Act.

In the second case, NEP has not cited any case in which a utility has refused to serve an existing customer's incremental load simply because another source existed. Further, this issue transcends the CWIP issue. Consequently, rather than speculate on appropriate action without a given set of facts, the Commission believes that it would be more appropriate to resolve the issue in the factual context of the case in which it may arise, regardless of whether CWIP is involved, rather than within the narrower confines of the CWIP rule. However, the Commission sees no basis, at this time, for distinguishing between the obligation, if any, to serve the incremental load growth, as defined above, of the remaining load of a customer that goes off-system in part and that of a customer that has left the system and desires to return.

NEP further requests that the Commission expressly limit the obligation to continue serving a customer to those instances where the customer has no other source of service. NEP contends that the obligation should not apply merely because the current supplier's rates may be lower than other alternatives available to the customer. NEP argues that, without such a limitation, a wholesale customer is virtually guaranteed costs which are less than or equal to those of the utility's other customers. Thus, NEP argues that the customer is given a riskless option to shop around, for alternative supply options, leaving the utility and its other customers with all the risk of the customer's failure to arrange a better deal. NEP asserts that the wholesale customer would have a tremendous and unfair competitive advantage in such a situation. If a customer wishes to leave the system, it should be required to bear the associated risks, according to NEP.

NRECA argued against allowing a utility to terminate service just because an alternative source is available. NRECA suggested that a utility might set up a subsidiary, provide the subsidiary with expensive or inefficient sources of power, and then justify termination of service to its wholesale customer on the grounds that the subsidiary constituted an alternative source.

The Commission agrees with NEP that if a customer wishes to leave the system, it should bear the associated risks. However, the Commission disagrees with NEP's assertion that the wholesale customer will be virtually guaranteed costs which are less than or equal to those of the utility's other customers and that the wholesale customer would be given a tremendous and unfair competitive advantage. In Order No. 474, the Commission stated that, if technically feasible, the customer may seek to regain its prior status by paying the unpaid CWIP with interest, plus reimbursement of any system costs due to inefficiencies caused by the utility not having been able to plan to provide the customer with service or that the customer could forego the utility's planning responsibilities and take "best efforts" service by simply reimbursing the utility for the additional costs, if any, of the utility's best efforts to provide service.[35] The Commission does not believe that its statements in Order No. 474 support NEP's assertion that the customer will be given any unfair competitive advantage. To the contrary, the Commission stated that the customer would be required to live with the consequences of its choice to voluntarily leave the security of the utility's service and noted that the consequences may involve rates far higher than the average system cost-based rates charged to the utility's customers who have paid for CWIP.[36]

The final rule discussed the source and extent of the obligation to serve under existing law. As the rule stated, "[i]t is the absence of alternatives that *affects* the public interest." [37] If there are sufficient alternative sources, the Commission is unlikely to order containued service. However, the Commission does not believe that, based on the presence of one alternative, regardless of the quality, reliability, or cost of that alternative, the Commission can automatically conclude that termination of service to a given customer will always be in the public interest. The Commission believes that such determinations must be made on a case-specific basis. However, no party requesting rehearing has cited any cases in which a utility sought to terminate service to a customer, based on the sole ground that there were alternative sources. Further, since this issue could arise even where no CWIP has been allocated, the potential for this issue to have arisen existed long before CWIP was permitted.[38]

c. *The Final Rule Does Not Set Specific Rates For Prodigal Customers.* NEP contends that it is neither necessary nor appropriate for the Commission to generically address in the final rule the appropriate rate for the utility to charge in such situations. It argues that the circumstances surrounding these types of situations will differ by utility and customer. NEP asserts that such situations should be handled on a case-by-case basis. In stating that the prodigal customer would be treated as any other new customer, the Commission did not intend to preclude utilities from seeking to charge prodigal customers rates which reflect the costs to service them. Rather, the intention was to prevent a utility from penalizing a prodigal customer vis-a-vis other new customers for having left the system in whole or in part. As with any new customer, or current customer seeking to increase its incremental load above normal load growth, the utility has the obligation to justify the justness and reasonableness of its rate filing. Further, the utility cannot unduly discriminate against the prodigal customer simply because that customer is a former customer.

2. Forward Looking Allocation Ratios

Concerning the remedy for double whammy, NRECA supports the decision to use a forward looking life cycle allocation method but contends that the remedy requires modification. NRECA states that it is unclear whether the forward looking ratios will be predicated upon simple class averages or individual customer usage calculations. NRECA favors the latter approach. NRECA further contends that the final rule does not address: (a) The possibility that the utility will estimate that wholesale load will grow faster than retail load; and (b) wholesale load growth related to new wholesale customers as opposed to increased purchases by existing wholesale

[35] 52 FR 23961, III FERC Statutes and Regulations ¶ 30,751 at 30,719.

[36] *Id.*

[37] 52 FR 23960, III FERC Statutes and Regulations ¶ 30,751 at 30,719 (emphasis added).

[38] With respect to NRECA's assertion that a utility might set up a subsidiary, provide the subsidiary with expensive or inefficient sources of power, and then justify termination of service on the grounds that the subsidiary constituted an alternative source of supply to the customer, the Commission notes three points. First, in the situation described by NRECA, the utility's ability to terminate service would be triggered by the customer seeking to avoid CWIP based on the customer's choice to leave the system. Second, regulatory approval might be required depending on the facilities which would be transferred. Third, the Commission, under section 205 of the Federal Power Act, would insure that any rates charged by the subsidiary would be just and reasonable and not unduly discriminatory or preferential.

customers. NRECA asserts that it would be inappropriate to increase the CWIP allocation of the current wholesale class based upon claims by the supplier that it will be attracting new wholesale customers. NRECA requests the Commission to make clear that foward looking allocation ratios will serve only to *reduce* wholesale CWIP responsibility that otherwise would attach from utilizing test year allocation factors. With respect to the final rule's discussion of obligation to serve, NRECA claims that the record does not support treating prodigal customers and new customers differently. Further, it argues that there are serious questions about extending the benefits of CWIP payments made by current wholesale customers to new customers. It suggests that a solution may be to have CWIP tracked on a customer basis.

In Order No. 474, the Commission adopted the forward looking allocation ratio approach to prevent cross-subsidization of customers. This means that there may be times when individual wholesale customers or even the entire wholesale group will properly require an allocation of CWIP through forward looking allocation ratios that exceeds that which would be produced using test period ratios, *i.e.*, to track load growth conditions where there is more rapid wholesale growth than retail growth. This would not be the case however, where the entirety of the greater wholesale growth is the product of the new prospective wholesale customer. In these circumstances, the new load would be excluded from the numerator of the forward looking allocation ratio representing the projected wholesale load of the current customers, but it would be included in the denominator representing the estimated system territorial load. The ultimate effect would be to not allocate the CWIP attributable to the new customer to the current wholesale customers.

NRECA is correct in pointing out that there may be instances when the only proper way to treat the power supply independence plans of a wholesale customer will be to require consideration of individual customer usage rather than class usage in the determination of appropriate forward looking ratios. However, the final rule specifically provides for this at § 35.26(c)(4) by requiring supporting documentation to permit examination and verification of the forward looking allocation ratio's recognition of each wholesale customer's plans, if any, for future alternative or supplementary power supplies. For purposes of preventing anticompetitive effects, including CWIP-induced price squeeze and double whammy, § 35.26(a)(4) also provides that sufficient recognition of such plans may require separate customer groups or provide for a rate design incorporating selected CWIP project credits. This acknowledges that all wholesale customers may not pursue power supply independence. Separate rate treatment for those wholesale customers anticipating alternative power supplies may be necessary to give these customers a full accounting of this.

Concerning NRECA's argument that there is no bases for treating prodigal customers and new wholesale customers differently regarding provision of service, the final rule expressly states that they are to be treated the same.[39]

IV. Effective Date

The change to the Commission's regulations in this order is effective October 23, 1987.

List of Subjects in 18 CFR Part 35

Electric power rates, Electric utilities, Reporting and recordkeeping requirements.

V. The Commission Orders

In light of the foregoing, the Commission grants rehearing in part, denies rehearing in part, clarifies Order No. 474, and amends Part 35, Chapter I, Title 18 of the Code of Federal Regulations, as set forth below.

By the Commission. Commissioner Stalon concurred with a separate statement to be issued later.

Kenneth F. Plumb

Secretary.

PART 35—FILING OF RATE SCHEDULES

1. The authority citation for Part 35 continues to read as follows:

Authority: Department of Energy Organization Act, 42 U.S.C. 7101–7352 (1992); Exec. Order No. 12009, 3 CFR 1978 Comp., p. 142; Independent Offices Appropriations Act, 31 U.S.C. 9701 (1982); Federal Power Act, 16 U.S.C. 791a–825r (1982); Public Utility Regulatory Policies Act, 16 U.S.C. 2601–2645 (1982).

2. In § 35.26, paragraphs (b)(1) and (g)(2) are revised to read as follows:

§ 35.26 Constuction work in progress.

* * * * *

(b) *Definitions.* For purposes of this section:

(1) "Constuction work in progress" or "CWIP" means any expenditure for public utility plant in process of construction that is properly included in Accounts 107 (construction work in progress) and 120.1 (nuclear fuel in process of refinement, conversion, enrichment, and fabrication) of Part 101 of this chapter, the Uniform System of Accounts Prescribed for Public Utilities and Licensees Subject to the Provisions of the Federal Power Act (Major and Nonmajor), that would otherwise be eligible for allowance for funds used during construction (AFUDC) treatment.

* * * * *

(g) * * *

(2) *Preliminary relief.* If an intervenor in its initial pleading alleges that a prices squeeze will occur as a direct result of the public utility's request for CWIP pursuant to § 35.26(c)(3) of this part and makes a concrete, substantial showing that it is likely to incur imminent, irreparable harm if such CWIP is allowed, the Commission will consider preliminary relief at the suspension stage of the case pursuant to paragraph (g)(4) of this section. Whether or not preliminary relief is granted at the suspension stage will not preclude consideration of further remedies later in the proceedings, if warranted.

* * * * *

3. In § 35.26(c)(4), the citation to "§§ 35.26 (1), (2), and (3) of this part" is revised to read "§§ 35.26(c) (1), (2), and (3) of this part".

[FR Doc. 87-21888 Filed 9-22-87; 8:45 am]

BILLING CODE 6717-01-M

[39] 52 FR 23,961, III FERC Statutes and Regulations ¶ 30,751 at 30,720.

DEPARTMENT OF THE INTERIOR

Bureau of Indian Affairs

25 CFR Parts 211, 212, and 225

Contracts for Prospecting and Mining on Indian Lands; Oil and Gas and Geothermal Contracts

September 18, 1987.

AGENCY: Bureau of Indian Affairs, Interior.

ACTION: Final rule; deferred of effective date.

SUMMARY: A final rulemaking document was published in the **Federal Register** on August 24, 1987 at 52 FR 31916. The effective date of the document was listed as September 23, 1987. The Bureau of Indian Affairs has decided it would be in the public interest to defer, by this notice, the effective date for an additional 30 days to allow the public sufficient time to review the final

rulemaking document prior to its becoming effective.

Interested persons wishing to provide additional comments on the final rulemaking document may do so in writing to the individual identified in the **"FOR FURTHER INFORMATION CONTACT"** section.

EFFECTIVE DATE: The final rulemaking document for 25 CFR Parts 211, 212, and 225 is effective October 24, 1987.

FOR FURTHER INFORMATION CONTACT: Joseph Johnston, Chief, Division of Energy and Mineral Resources, Bureau of Indian Affairs, Room 340-SIB, 1951 Constitution Avenue NW., Washington, DC 20245; telephone (202) 343-3722.

W.P. Ragsdale,

Acting Assistant Secretary—Indian Affairs.

[FR Doc. 87-21875 Filed 9-22-87; 8:45 am]

BILLING CODE 4310-02-M

ENVIRONMENTAL PROTECTION AGENCY

40 CFR Part 52

[A-4-FRL-3266-1; FL-020]

Approval and Promulgation of Implementation Plans; Florida; Smart-Pak Industries Consent Order

AGENCY: Environmental Protection Agency (EPA).

ACTION: Final rule.

SUMMARY: EPA today approves the revision to the Florida State Implementation Plan (SIP) to include the Smart-Pak Industries Consent Order. This Consent Order was negotiated with Smart-Pak Industries by the Florida Department of Enviromental Regulation (DER) and EPA Region IV. The intent of the Consent Order is to ensure federal enforceability of negotiated permit conditions which limit the volatile organic compound (VOC) emissions from the facility to less than 100 tons per year (TPY). The State has certified that, based on the available evidence, implementation of the Consent Order will not jeopardize the attainment and maintenance of ambient air quality standards.

DATE: This action is effective November 23, 1987 unless notice is received within 30 days that someone wishes to submit adverse or critical comments.

ADDRESSES: Copies of the materials submitted by Florida may be examined during normal business hours at the following locations:

Environmental Protection Agency, Region IV Air Programs Branch, 345 Courtland Street NE., Atlanta, Georgia 30365

Florida Department of Environmental Regulation, Bureau of Air Quality Management, Twin Towers Office Building, 2600 Blair Stone Road, Tallahassee, Florida 32301

Public Information Reference Unit, Library Systems Branch, Environmental Protection Agency, 401 M Street SW., Washington, DC 20460

FOR FURTHER INFORMATION CONTACT: Jill Perry, Air Programs Branch, EPA Region IV, at the above address and telephone number (404) 347-2864 or FTS 257-2864.

SUPPLEMENTARY INFORMATION: On November 21, 1983, the Florida DER issued an operating permit, No AO 13-68559, to the Smart-Pak Industries facility in Dade County. The Smart-Pak facility includes five graphic arts rotogravure presses which have the potential to emit more than 100 TPY of VOC emissions. These presses are subject to the emission limiting standards in the reasonably available control technology (RACT) regulation for graphic arts, Rule 17-2.650(1)(f)16, and to the compliance schedules required by Rule 17-2.650(1)(b)e. Smart-Pak did not apply for a construction permit by January 1, 1981, date specified in Rule 17-2.650(1)(b)e; final compliance with the applicable emission limiting standards would have been required by September 1, 1982. Instead, Smart-Pak elected to reduce VOC emissions by instituting internal management and housekeeping procedures between September 30, 1980, and September 30, 1983. These actions reduced the actual VOC emissions from over 200 TPY to less than 100 TPY. However, EPA determined that the specific conditions of the operation permit were not federally enforceable. Therefore, the Florida DER commenced negotiations for a Consent Order with Smart-Pak Industries.

The Consent Order establishes: (1) Requirements which will limit VOC emissions from the facility to less than 100 TPY; (2) measures to ensure that Smart-Pak Industries will continously comply with the applicable emission limiting standard; (3) penalties for failure to comply with the applicable provisions of the Consent Order; and (4) penalties for failure to comply with the applicable compliance schedule in the Florida Administrative Code Chapter 17-2. The provisions of the Consent Order are consistent with the requirements of the Florida Administrative Code Chapter 17-2 which requires the application of RACT level controls to VOC sources in ozone nonattainment areas. On March 21, 1986, the Consent Order was signed, and on June 17, 1986, it was adopted as a revision to the Florida SIP to ensure federal enforceability. On August 14, 1986, the Florida DER submitted the Consent Order to EPA for Approval.

For more detailed information, please refer to the Technical Support Document. This document is available for inspection at the EPA Region IV office.

Final Action

The Consent Order meets EPA requirements. This action is being taken without prior proposal because the change is noncontroversial and EPA anticipates no comments on it. The public should be advised that this action will be effective 60 days from the date of this **Federal Register** notice. However if notice is received within 30 days that someone wishes to submit adverse or critical comments, this action will be withdrawn and two subsequent notices will be published before the effective date. One notice will withdraw the final action and another will begin a new rulemaking by announcing a proposal of the action and establishing a comment period. Therefore, EPA is today approving the revision to the Florida SIP.

Under 5 U.S.C. 605(b), I certify that this SIP revision will not have a significant economic impact on a substantial number of small entities (see 46 FR 8709).

The Office of Management and Budget has exempted this rule from the requirements of section 3 of Executive Order 12291.

Under section 307(b)(1) of the Act, petitions for judicial review of this action must be filed in the United States Court of Appeals for the appropriate circuit by November 23, 1987. This action may not be challenged later in proceedings to enforce its requirements. (See section 307(b)(2).)

List of Subjects in 40 CFR Part 52

Air Pollution Control, Hydrocarbons, Incorporation by reference, Intergovernmental relations, Ozone.

Note: The Director of the Federal Register approved the incorporation by reference of the Florida SIP on July 1, 1982.

Date: September 17, 1987.

Lee M. Thomas,

Administrator.

Part 52 of Chapter I, Title 40, Code of Federal Regulations, is amended as follows:

PART 52—[AMENDED]

Subpart K—Florida

1. The authority citation for Part 52 continues to read as follows:

Authority: 42 U.S.C. 7401–7642.

2. Section 52.520 is amended by adding paragraph (c)(62) to read as follows:

§ 52.520 Identification of plan.

* * * * *

(c) * * *

(62) Consent Order was submitted by EPA on August 14, 1986, by the Florida Department of Environmental Regulation.

(i) Incorporation by reference.

(A) A Consent Order for Smart-Pak Industries was adopted by the Florida Department of Environmental Regulation on June 17, 1986.

(ii) Additional material—none.

[FR Doc. 87-21937 Filed 9-22-87; 8:45 am]

BILLING CODE 6560-50-M

---

40 CFR Part 52

[(A-4-FRL-3266-2) MS-005]

Approval and Promulgation of Implementation Plans; Mississippi Stack Height Rules

AGENCY: Environmental Protection Agency (EPA).

ACTION: Final rule.

SUMMARY: In this action, EPA is approving revisions to the Mississippi state implementation plan (SIP) submission to EPA on April 1, 1986. Mississippi has revised its SIP to include regulations for good engineering practice stack height. These regulations are equivalent to EPA requirements promulgated at Part 51 of Chapter I, Title 40 of the Code of Federal Regulations.

DATES: This action will be effective on November 23, 1987, unless notice is received within 30 days that adverse or critical comments will be submitted.

ADDRESSES: Copies of the materials submitted by Mississippi may be examined during normal business hours at the following locations:

Public Information Reference Unit, Library Systems Branch, Environmental Protection Agency, 401 M Street SW., Washington, DC 20460

Air Programs Branch, Environmental Protection Agency, Region IV, 345 Courtland Street NE., Atlanta, Georgia 30365

Mississippi Department of Natural Resources, Bureau of Pollution Control, 2380 Highway 80 West, Jackson, Mississippi 39209

FOR FURTHER INFORMATION CONTACT: Beverly T. Hudson, EPA Region IV, Air Programs Branch at above listed address, telephone (404) 347-2864 or FTS 257-2864.

SUPPLEMENTARY INFORMATION: In the **Federal Register** of July 8, 1985 (50 FR 27892), EPA published final regulations to implement section 123 of the Clean Air Act (CAA), which regulates the manner in which dispersion of pollutants from a source may be considered in setting emission limitations. Pursuant to these regulations and the Clean Air Act Amendments of 1977, all states were required to (1) review and revise, as necessary, their state implementation plans (SIPs) to include provisions that limit stack height credit and dispersion techniques in accordance with the revised regulations, and (2) review all existing emission limitations to determined whether these limitations have been affected by stack height credits above GEP or any other dispersion techniques. For any limitations so affected, states were to prepare revised limitations consistent with their revised SIPs. All SIP revisions and revised emission limits were to be submitted to EPA within nine months of promulgation.

Subsequently, EPA issued detailed guidance on carrying out the necessary reviews. For the review of emission limitations, states were to prepare inventories of stacks greater than 65 meters in height and sources with emissions of sulfur dioxide (SO_2) in excess of 5000 tons per year. These limits correspond to the *de minimis* GEP stack height and the *de minimis* SO_2 emission exemption from prohibited dispersion techniques. These sources were then to be subjected to detailed review for conformance with the revised regulations. State submissions were to contain an evaluation of each stack and source in the inventory.

On April 1, 1986, the Mississippi Department of Natural Resources, Bureau of Pollution Control submitted SIP revisions for good engineering practice stack height. Since the State formally revised its SIP, a public hearing on these stack height reviews was held on March 10, 1986.

Mississippi's regulations limit the amount of stack height or dispersion credit (dispersion techniques) a source can claim in the process of establishing its emission limitation. Dispersion techniques include the use of stack heights greater than GEP and use of other techniques to increase the dispersion of emissions rather than continuously reducing emissions from a source. These regulations do not limit the physical stack height of any source, or the actual use of dispersion techniques at a source, nor do they require any specific stack height for any source. Instead, they set limits on the maximum credit for stack height and other dispersion techniques to be used in ambient air modeling for the purpose of setting an emission limitation and calculating the air quality impact of a source. Sources are modeled at their actual physical stack height unless that height exceeds their GEP stack height. The regulations apply to all stacks not in existence on December 31, 1970, and all dispersion techniques implemented since December 31, 1970. The regulation applies to both new and existing sources, thereby satisfying requirements for state new source review regulations at 40 CFR 51.164.

Mississippi has adopted definitions corresponding to EPA's GEP regulations. The State's regulations define a number of specific terms, including "excessive concentration," "dispersion techniques" and "nearby." Mississippi's revisions bring their existing regulations into conformance with the federal stack height rule. They found no emission limitations affected by stack height credits above GEP or any prohibited dispersion technique.

Final Action

EPA has reviewed the submittal and found it to be in conformance with EPA's stack height requirements. Therefore, EPA is today approving Mississippi's regulations on stack height.

EPA is publishing this action without prior proposal because the Agency views this as a noncontroversial issue and anticipates no adverse comments. This action will be effective 60 days from the date of this **Federal Register** notice unless, within 30 days of its publication, notice is received that adverse or critical comments will be submitted. If such notice is received, this action will be withdrawn before the effective date by publishing two subsequent notices. One notice will withdraw the final action and another will begin a new rulemaking by announcing a proposal of the action and establishing a comment period. If no such comments are received, the public is advised that this action will be effective November 23, 1987.

Under section 307(b)(1) of the Act, petitions for judicial review of this action must be filed in the United States

Court of Appeals for the appropriate circuit by November 23, 1987. This action may not be challenged later in proceedings to enforce its requirements. (See section 307(b)(2).)

Under 5 U.S.C. 605(b), I certify that this SIP revision will not have a significant economic impact on a substantial number of small entities. (See 46 FR 8709.)

The Office of Management and Budget has exempted this rule from the requirements of section 3 of Executive Order 12291.

List of Subjects in 40 CFR Part 52

Air pollution control, Intergovernmental relations, Incorporation by reference.

Note: Incorporation by reference of the Mississippi State Implementation Plan was approved by the Director of the **Federal Register** on July 1, 1982.

Dated: September 17, 1987.

Lee M. Thomas,

Administrator.

Part 52 of Chapter I, Title 40, Code of Federal Regulations, is amended as follows:

PART 52—[AMENDED]

Subpart Z—Mississippi

1. The authority citation for Part 52 continues to read as follows:

Authority: 42 U.S.C. 7401–7642.

2. Section 52.1270 is amended by adding paragraph (c)(19) to read as follows:

§ 52.1270 Identification of plan.

* * * * *

(c) * * *

(19) Stack height regulations were submitted to EPA on April 1, 1986 by the Mississippi Department of Natural Resources.

(i) Incorporation by reference.

(A) Mississippi Department of Natural Resources, Bureau of Pollution Control, Appendix C–5, Air Emission Regulations, Regulation APC–S–1, Section 9, which was adopted on March 26, 1986.

(B) Letter of April 1, 1986 from Mississippi Department of National Resources.

(ii) Additional material.

None.

[FR Doc. 87–21938 Filed 9–22–87; 8:45 am]

BILLING CODE 6560-50-M

40 CFR Part 180

[PP 6F3311/R906; FRL-3264-8]

Pesticide Tolerance for Bromoxynil

AGENCY: Environmental Protection Agency (EPA).

ACTION: Final rule.

SUMMARY: This rule establishes a tolerance for residues of the herbicide bromoxynil resulting from application of its octanoic acid ester and/or butyric acid ester in or on the raw agricultural commodity (RAC) alfalfa seedling at 0.10 part per million (ppm). This regulation was requested by Union Carbide Agricultural Products Co. and establishes the maximum permissible level for residues of the herbicide in or on this RAC.

EFFECTIVE DATE: September 23, 1987.

ADDRESS: Written objections may be submitted to the: Hearing Clerk (A–110), Environmental Protection Agency, Rm. 3708, 401 M St., SW., Washington, DC 20460.

FOR FURTHER INFORMATION CONTACT: Robert J. Taylor, Product Manager (PM) 25, Registration Division (TS–767C), Office of Pesticide Programs, Environmental Protection Agency, 401 M St., SW., Washington, DC 20460.

Office location and telephone number: Rm. 412, CM #2, 1921 Jefferson Davis Highway, Arlington, VA 22202, (703)–557–1800.

SUPPLEMENTARY INFORMATION: EPA issued a notice, published in the **Federal Register** of December 26, 1985 (50 FR 52851), which announced that Union Carbide Agricultural Products Co. had submitted a pesticide petition, PP 6F3311, to EPA proposing to amend 40 CFR 180.324 by establishing a tolerance for residues of the herbicide bromoxynil (3,5-dibromo-4-hydroxybenzonitrile) resulting from application of its octanoic acid ester and/or butyric acid ester in or on the commodity alfalfa seedling at 0.10 ppm.

There were no comments received in response to the notice of filing.

The data submitted in the petition and other relevant material have been evaluated. The data considered in this petition include several acute studies, a 13-week feeding study in dogs with a no-observable-effect level (NOEL) of 5 milligrams/kilogram/day (mg/kg/day); a 13-week feeding study in rats with a NOEL of 15.6 mg/kg/day; a three-generation reproduction study with rats fed 0, 1.5, 5, and 15 mg/kg/day, with a reproductive NOEL of 15 mg/kg/day; a teratology study in rabbits administered 0, 15, 30, or 60 mg/kg/day with a teratogenic, embryo-, and fetotoxic NOEL of 30 mg/kg/day; a teratology study in rats fed dosages of 0, 5, 15, or 35 mg/kg/day with a fetotoxic and maternal toxic NOEL of 15 mg/kg/day and no teratogenic effects occurring at 35 mg/kg/day (HDT) and mixed positive and negative results in a battery of mutagenic assays which includes the Ames *Salmonella typhimurium*, unscheduled DNA synthesis (UDS), DNA repair, sister-chromatid exchange (SCE), mouse lymphoma, and *in vitro* chromosome aberration assay in CHO cells.

The provisional acceptable daily intake (PADI) based on a 2-year rat chronic feeding study (NOEL of 5 mg/kg/day) and using a thousand-fold safety factor is calculated to be 0.005 mg/kg/day. The theoretical maximum residue contribution (TMRC) from existing tolerances for a 1.5-kg diet is calculated to be 0.352 mg/kg/day (1.5 kg). The current action will not increase the TMRC or PADI utilized. Published tolerances utilize 11.74 percent of the PADI. In the mouse oncogenicity study, bromoxynil was associated with an increase in liver tumors in males. This finding will be evaluated in the Toxicology Branch Peer Review Committee meeting.

Data lacking are chronic toxicity studies in a rodent and nonrodent and an acceptable oncogenicity study in rats. The company has been notified of these deficiencies and has agreed to perform the studies. Because alfalfa is not a human food item and does not increase the TMRC or PADI, this action is toxicologically supported.

The pesticide is useful for the purpose of this tolerance rule. The nature of the residue is adequately understood for the purposes of establishing the tolerance. Adequate analytical methodology (gas chromatography using a ^{63}NI electron capture detector) is available. This method is listed in the Pesticide Analytical Manual II. There are currently no actions pending against the registration of this chemical. No secondary residues are expected to occur in meat, milk, poultry, or eggs as a result of use on alfalfa.

Based on the above information considered by the Agency, it is concluded that the tolerance established by amending 40 CFR Part 180 will protect the public health, and the tolerance is therefore set forth below.

Any person adversely affected by this regulation may, within 30 days after the date of publication in the **Federal Register**, file written objections with the

Hearing Clerk, Environmental Protection Agency, Rm. M-3708 (A-110), 401 M St., SW., Washington, DC 20460. Such objections should be submitted in quintuplicate and specify the provisions of the regulations deemed objectionable and the grounds for the objections. If a hearing is requested, the objections must state the issues for the hearing. A hearing will be granted if the objections are legally sufficient to justify the relief sought.

The Office of Management and Budget (OMB) has exempted this regulation from OMB requirements of Executive Order 12291 pursuant to section 8(b) of that Order.

Pursuant to the requirements of the Regulatory Flexibility Act (Pub. L. 96-354, 94 Stat. 1164, 5 U.S.C. 610-612), the Administrator has determined that regulations establishing new tolerances or raising tolerance levels or establishing exemptions from tolerance requirements do not have a significant economic impact on a substantial number of small entities. A certification statement to this effect was published in the **Federal Register** of May 4, 1981 (46 FR 24950).

(Sec. 408(d)(2), 68 Stat. 512 (21 U.S.C. 346a(d)(2))

List of Subjects in 40 CFR Part 180

Administrative practice and procedure, Agricultural commodities, Pesticides and pests.

Dated: September 9, 1987.

Douglas D. Campt,

Director, Office of Pesticide Programs.

Therefore, 40 CFR Part 180 is amended as follows:

PART 180—[AMENDED]

1. The authority citation continues to read as follows:

Authority: 21 U.S.C. 346a.

2. In § 180.324(a) by adding and alphabetically inserting the following raw agricultural commodities, to read as follows:

§ 180.324 Bromoxynil; tolerance for residues.

(a) * * *

Commodity	Part per million
Alfalfa, seedling	0.10
* * * * *	

[FR Doc. 87-21720 Filed 9-22-87; 8:45 am]

BILLING CODE 6560-50-M

40 CFR Part 799

[OPTS-42028D; FRL-3265-9]

Propylene Oxide; Final Test Standards and Reporting Requirements

AGENCY: Environmental Protection Agency (EPA).

ACTION: Final rule.

SUMMARY: Under section 4 of the Toxic Substances Control Act (TSCA), this final rule specifies test standards and reporting requirements to be used for the testing required of manufacturers and processors of propylene oxide (CAS No. 75-56-9). The Agency has adopted industry-submitted study plans, as modified by EPA (EPA-approved study plans) as test standards for conducting the inhalation developmental toxicity testing for propylene oxide under 40 CFR 799.3450.

DATES: In accordance with 40 CFR 23.5, this rule shall be promulgated for purposes of judicial review at 1 p.m. eastern ("daylight" or "standard" as appropriate) time on October 7, 1987. This rule shall become effective on November 6, 1987.

FOR FURTHER INFORMATION CONTACT: Edward A. Klein, Director, TSCA Assistance Office (TS-799), Office of Toxic Substances, Environmental Protection Agency, Room E-543, 401 M Street SW., Washington, DC 20460, (202-554-1404).

SUPPLEMENTARY INFORMATION: EPA is promulgating a final rule under section 4(a) of TSCA specifying the test standards and reporting requirements for inhalation developmental toxicity testing of propylene oxide.

I. Background

In the **Federal Register** of November 27, 1985 (50 FR 48762), EPA issued a final Phase I rule pursuant to TSCA section 4 that establishes testing requirements for manufacturers and processors of propylene oxide. This Phase I rule requires inhalation developmental toxicity testing for propylene oxide.

At the same time, EPA proposed a relevant TSCA test guideline as the test standard (50 FR 48803; November 27, 1985). In addition, EPA proposed that the data from the required study be submitted within a certain time period, the time period serving as the data submission deadline required by TSCA section 4(b)(1). The reasons for this change in the test rule development process for propylene oxide are discussed in Unit II of the preamble to the proposed test standards (50 FR 48803).

As discussed in the preamble to the interim final Test Rule Development and Exemption Procedures, 40 CFR Part 790 (50 FR 20652; May 17, 1985), industry and other commenters may suggest an alternative methodology or modifications to the OTS test guideline, i.e., the proposed test standard, during the public comment period. The final test standard would be either the OTS test guideline or other suitable guideline, a modified version of this guideline, the alternative methodology submitted by commenters, or a modified version of the alternative methodology.

On February 6, 1986, ARCO Chemical Company (ARCO) notified EPA of its intent to conduct the testing required in the Phase I test rule for propylene oxide (Ref. 1). Exemption applications were received from Dow Chemical Company (Dow) (Ref. 2) and two processors, Exxon Chemical Americans (Ref. 3) and Aldrich Chemical Co. (Ref. 4). On June 26, 1986, ARCO submitted two draft study plans containing two protocols (Ref. 5) to EPA for review and approval. EPA determined that these protocols generally conform to the Health Effects Test Guideline set forth in 40 CFR 798.4350. EPA notified ARCO on August 1, 1986 (Ref. 6) that, with certain specified clarifications, the Agency found the protocols to be appropriate and acceptable for inhalation developmental toxicity testing for propylene oxide. ARCO submitted two final study plans containing two protocols to EPA on October 28, 1986 (Ref. 7).

EPA has found the industry-submitted final study plans (Ref. 7) as modified by EPA (Ref. 6) to be acceptable for assessing the developmental toxicity of propylene oxide (Ref. 8). As a result, EPA is promulgating them, along with reporting requirements, as Phase II test standards for the testing of propylene oxide under 40 CFR 799.3450.

II. Proposed Phase II Test Rule

A. Test Standards

The Phase I rule specifies that propylene oxide be tested for inhalation developmental toxicity. The Agency's proposed Phase II rule specified that testing of propylene oxide be conducted using as the test standard the TSCA guideline for inhalation developmental toxicity testing, 40 CFR 798.4350.

B. Reporting Requirements

As specified in 40 CFR 799.10, all data developed under this rule would be reported in accordance with its TSCA Good Laboratory Practice (GLP)

Standards which appear at 40 CFR Part 792.

EPA is required by section 4(b)(1)(C) of TSCA to specify the time period during which persons subject to a test rule must submit test data. The Agency proposed that: (1) The inhalation developmental toxicity test be completed and the final results submitted to the Agency within 12 months of the effective date of the final test rule, and (2) the interim progress reports be provided quarterly.

III. Response To Public Comments

The Agency received comments from ARCO and Dow (Refs. 5 and 9). A public meeting was not requested. The major issues identified for the proposed test standard and reporting requirements are discussed in Units III.A. and B.

A. Developmental Toxicity Testing

Dow (Ref. 9) commented that, while the Phase II proposed rule specified that the rat be used as the mammalian test species, the preamble to the final Phase I rule suggested that a rat strain other than Sprague-Dawley be selected for the conduct of the study (see 50 FR 48764; November 27, 1985). Dow does not believe that compelling evidence exists to require the selection of an alternate strain, and therefore suggests that selection of an appropriate rat strain be done by the laboratory conducting the test. Dow also commented that EPA had not adequately considered the availability of facilities and personnel to perform the inhalation developmental toxicity testing required under the Phase I rule.

EPA believes that this is no longer a concern because ARCO has agreed to sponsor the developmental toxicity study and has informed EPA that the study can be conducted at the International Research and Development Corporation using the Fisher 344 rat. EPA finds this acceptable.

ARCO did not submit comments on the proposed test standards to EPA during the comment period. Subsequent to the comment period, however, ARCO submitted two draft study plans containing two protocols to EPA for review and approval on June 20, 1986 (Ref. 5). EPA notified ARCO on August 1, 1986, that with certain specified clarifications (Ref. 6), the Agency found the protocols to be appropriate and acceptable for developmental toxicity testing of propylene oxide. ARCO submitted copies of the final study plans containing two protocols on October 28, 1986 (Ref. 7). The final study plans (Ref. 7) along with the EPA clarifications sent to ARCO (Ref. 6) are the EPA-approved study plans for propylene oxide (Ref. 8) and are promulgated in this final rule as the test standards for the testing of propylene oxide.

B. Reporting Requirements

Dow (Ref. 9) commented that while a 12-month period is sufficient to complete a teratology study, the requirement to submit the final report within 12 months of the effective date of the final Phase II rule is not justified. Instead Dow suggested that the data submission deadline be extended to 18 months from the effective date of the final rule.

EPA now generally requires that a final report be submitted within 15 months of the effective date of a final rule requiring inhalation developmental toxicity testing. However, because ARCO has already begun the required testing, EPA does not believe that it is unreasonable to require the submission of the final report no later than 12 months from the effective date of this final Phase II rule, as originally proposed.

Dow questioned the utility of the proposed requirement that progress reports be provided to EPA on a quarterly basis (Ref. 9). Dow maintains that such a reporting schedule unduly burdens those doing the study.

EPA believes that progress reports are necessary to keep EPA informed of the status of required tesing and any difficulties that the testing facility may encounter during the course of testing. EPA has decided, however, that one interim progress report, submitted 6 months after this final Phase II rule is effective, will be sufficient to keep EPA apprised of such information.

IV. Final Phase II Test Rule

A. Test Standards

The protocols contained in the EPA-approved study plans specify test methods and conditions for conducting both probe and definitive inhalation developmental toxocity studies in rats under this final Phase II rule. The Agency believes that the conduct of the required studies in accordance with these test standards will ensure that the resulting data are reliable and adequate. There are essentially no differences in the EPA-approved study plans and the Health Effects Test Guideline set forth in 40 CFR 798.4350.

Under the final test standards, exposure levels of 0, 300, 500, and 750 parts per million (ppm) of propylene oxide for 6 hours/day will be used for the Fisher 344 rat (days 6 through 15 of gestation) probe studies, with exposure levels for the full inhalation developmental toxocity studies based on results of the probe studies. The EPA-approved study plans (Ref. 8) are available in the public docket for this action. The EPA-approved study plans conform to the TSCA Health Effects Test Guidelines for Inhalation Toxicity Testing, 40 CFR 798.4350.

B. Reporting Requirements

The Agency requires that all data developed under this rule be reported in accordance with the TSCA GLP Standards (40 CFR Part 792).

The Agency is required by TSCA section 4(b)(1)(C) to specify the time period during which persons subject to a test rule must submit test data.

Testing was initiated by ARCO on October 27, 1986, and all results must be reported to EPA within 12 months of the effective date of the final Phase II rule. In addition, a progress report must be submitted to the Agency 6 months after the effective date of this Phase II final rule.

TSCA section 14(b) governs Agency disclosure of all test data submitted pursuant to section 4 of TSCA. Upon receipt of data required by this rule, the Agency will publish a notice of receipt in the **Federal Register** as required by section 4(d).

C. Exemptions

Requests for exemptions from the testing requirements contained in the final TSCA section 4(a) Phase I test rule for propylene oxide (CAS No. 75-56-9) were received from a manufacturer, Dow (Ref. 2), and two processors, Exxon Chemical Americas and Aldrich Chemical Company (Refs. 3 and 4), and have been conditionally approved by the Agency. As described in the final rule for test rule development and exemption procedures (40 CFR Part 790), exemption applications are evaluated prior to the promulgation of the final Phase II test rule. Exemptions to these testing requirements are being granted to Dow and all processors on the condition that the test sponsor will successfully complete the required testing according to the test standards and data submission deadlines in this final Phase II test rule for propylene oxide. If the Agency finds it necessary to terminate conditional exemptions from the testing requirement for propylene oxide, it will notify the exemption holders to that effect and explain the reasons for the Agency's decision.

A letter of intent to test has been received for the requirements contained in the final Phase I test rule for propylene oxide from ARCO (Ref. 1). As described in EPA's final rule on data

reimbursement (40 CFR Part 791), when the Agency promulgates a final test rule, all of the manufacturers, importers, and processors of the chemical substance or mixture subject to the rule are expected to bear jointly the cost of testing. Because the Agency has granted conditional approval of these exemption requests, persons who have been granted exemptions should contact ARCO to arrange appropriate reimbursement for a share of the cost of this testing. If a company believes that confidentiality so requires, such contact may be made through a third party.

D. Judicial Review

The promulgation date for the propylene oxide Phase I final rule was established as 1 p.m. eastern standard time on December 11, 1985 (50 FR 48762; November 27, 1985). To EPA's knowledge, EPA received no petitions for judicial review of that Phase I final rule. Accordingly, any petition for judicial review of this final Phase II rule will be limited to a review of the test standards and reporting requirements for propylene oxide established in this final Phase II rule.

E. Other Provisions

TSCA section 4 findings, required testing test substance specifications, persons required to test, enforcement provisions, and the economic analysis are presented in the final Phase I rule for propylene oxide.

V. Rulemaking Record

EPA has established a record for this rulemaking, [Docket Number OPTS-42028D]. This record includes basic information considered by the Agency in developing this rule and appropriate **Federal Register** notices.

This record includes the following information:

A. Supporting Documentation

The supporting documentation for this rulemaking consists of the proposed and final Phase I test rules for propylene oxide (49 FR 430, January 4, 1984; 50 FR 48762, November 27, 1985) and the proposed Phase II test standards (50 FR 48803; November 27, 1985) rule and the following:

(1) **Federal Register** notices pertaining to this final rule consisting of:

(a) Notice of interim final rule on test rule development and exemption procedures (50 FR 20652; May 17, 1985).

(b) Judicial Review under EPA-Administered Statutes (50 FR 7270; February 21, 1985).

(c) Notice of proposed rule on revisions of TSCA guidelines (51 FR 1522; January 14, 1986).

(2) Communications consisting of:

(a) Written public comments.

(b) Summaries of phone conversations.

(3) Chemical Testing Industry: Profile of Toxicological Testing, prepared by Development Planning and Research Associates, Inc. and ICF Incorporated for U.S. Environmental Protection Agency, Office of Pesticides and Toxic Substances, Washington, DC 20460 (October 1981).

B. References

(1) ARCO Chemical Company. Letter to TSCA Public Information Office, Office of Pesticides and Toxic Substances, Environmental Protection Agency, Washington, DC, from Joan L. McCuen, ARCO Chemical Company, Newton Square, PA. Notice of intent to test propylene oxide (February 6, 1986).

(2) Dow Chemical Company. Letter to TSCA Public Information Office, Office of Pesticides and Toxic Substances, U.S. Environmental Protection Agency, Washington, DC, from R.A. Gerardo, Dow Chemical Company, Midland, Michigan. Application for exemption from conducting testing of propylene oxide (February 7, 1986).

(3) Exxon Chemical Americas. Letter to Document Control Officer, U.S. Environmental Protection Agency, Washington, DC, from Harry L. Hunter, Jr., Exxon Chemical Americas, Houston, TX. Application for exemption from conducting testing of propylene oxide (February 14, 1986).

(4) Aldrich Chemical Company, Inc. Letter to Document Control Officer, Office of Pesticides and Toxic Substances, U.S. Environmental Protection Agency, Washington, DC, from Alfonse W. Runquist, Ph.D., Aldrich Chemical Company, Inc., Milwaukee, Wisconsin. Application for exemption from conducting testing of propylene oxide (January 6, 1986).

(5) ARCO Chemical Company. Letter, containing two draft study plans for testing propylene oxide, to Ralph Northrop, Test Rules Development Branch, Office of Pesticides and Toxic Substances, Environmental Protection Agency, from Joan L. McCuen, ARCO Chemical Company, Newtown Square, PA (June 26, 1986).

(6) USEPA. Letter, notifying ARCO Chemical Company that their protocols are acceptable, to Joan McCuen, ARCO Chemical Company, Newtown Square, PA, from Gary E. Timm, Test Rules Development Branch, Office of Pesticides and Toxic Substances, U.S. Environmental Protection Agency, Washington, DC (August 1, 1986).

(7) ARCO Chemical Company. Letter, containing final study plans for testing propylene oxide, to Ralph Northrop, Test Rules Development Branch, Office of Pesticides and Toxic Substances, U.S. Environmental Protection Agency, Washington, DC, from Joan McCuen, ARCO Chemical Company, Newtown Square, PA (October 28, 1986).

(8) U.S. Environmental Protection Agency. Study Plans for Propylene Oxide (EPA-approved study plans, July 22, 1987).

(9) Dow Chemical Company. Letter, comments on proposed test standards and reporting requirements of propylene oxide, to Document Control Officer, Office of Pesticides and Toxic Substances, U.S. Environmental Protection Agency, Washington, DC, from Carlos M. Bowman, Ph.D., Dow Chemical Company, Midland, Michigan (January 8, 1986).

Confidential Business Information (CBI), while part of the record, is not available for public review. A public version of the record, from which CBI has been deleted, is available for inspection from 8 a.m. to 4 p.m., Monday through Friday, except legal holidays, in Room NE-G004, 401 M St., SW., Washington, DC. 20460.

VI. Other Regulatory Requirements

A. Executive Order 12291

Under Executive Order 12291, EPA must judge whether a rule is "major" and therefore subject to the requirements of a Regulatory Impact Analysis. This test rule is not major because it does not meet any of the criteria set forth in section 1(b) of the Order. The economic analysis of the testing of propylene oxide is discussed in the Phase I test rule (50 FR 48762; November 27, 1985).

This final Phase II test rule was submitted to the Office of Management and Budget (OMB) for review as required by Executive Order 12291. Any written comments received from OMB, together with any EPA response to these comments are included in the public record for this rulemaking.

B. Regulatory Flexibility Act

Under the Regulatory Flexibility Act (5 U.S.C. 601 *et seq.*, Pub. L. 96-354, September 19, 1980), EPA is certifying that this test rule will not have a significant impact on a substantial number of small businesses for the following reasons:

(1) There are no small manufacturers of this chemical substance.

(2) Small processors are not expected to perform testing themselves, or participate in the organization of the testing effort.

(3) Small processors are unlikely to be affected by reimbursement requirements.

C. Paperwork Reduction Act

OMB has approved the information collection requirements contained in the final Phase II rule under the provisions of the Paperwork Reduction Act of 1980,

44 U.S.C. 3501 *et seq.*, and has assigned OMB control number 2070-0033. No public comments on these requirements were submitted to the Office of Information and Regulatory Affairs of OMB.

List of Subjects in 40 CFR Part 799

Testing, Environmental protection, Hazardous substances, Chemicals, Recordkeeping and reporting requirements.

Dated: September 12, 1987.

J.A. Moore,

Assistant Administrator for Pesticides and Toxic Substances.

Therefore, 40 CFR Part 799 is amended as follows:

PART 799—[AMENDED]

1. The authority citation for Part 799 continues to read as follows:

Authority: 15 U.S.C. 2603, 2611, 2625.

2. By amending § 799.3450 by adding paragraphs (c)(1)(ii) and (iii) and (d), to read as follows:

§ 799.3450 Propylene oxide.

* * * * *

(c) * * *

(1) * * *

(ii) *Test standards.* The inhalation developmental toxicity testing shall be conducted in accordance with the EPA-approved study plans (July 22, 1987): "Range-finding Inhalation Developmental Toxicity Study in Rats" and "Inhalation Developmental Toxicity Study in Rats". Copies of these EPA-approved study plans are located in the rulemaking record for this rule (docket no. OPTS-42028D) and are available for inspection in EPA's OPTS Reading Room, NE-G004, 401 M Street SW., Washington, DC 20460, from 8 a.m. to 4 p.m., Monday through Friday, except legal holidays.

(iii) *Reporting requirements.* (A) The developmental toxicity tests shall be completed and the final reports submitted to EPA within 12 months of the effective date of the final Phase II rule.

(B) An interim progress report shall be submitted to EPA 6 months after the effective date of the final Phase II rule.

(d) *Effective date.* The effective date of the final Phase II rule requiring inhalation developmental toxicity testing of propylene oxide is November 6, 1987.

[FR Doc. 87-21939 Filed 9-22-87; 8:45 am]

BILLING CODE 6560-50-M

DEPARTMENT OF TRANSPORTATION

National Highway Traffic Safety Administration

49 CFR Part 571

[Docket No. 87-03; Notice 2]

Federal Motor Vehicle Safety Standards; Headlamp Concealment Devices

AGENCY: National Highway Traffic Safety Administration (NHTSA), DOT.

ACTION: Final rule.

SUMMARY: This notice amends Motor Vehicle Safety Standard No. 112, in response to Chrysler Corporation's petition for rulemaking. The amendment deletes the requirement that during the opening of a concealed headlamp the headlamp beam may not project to the left of or above the position of the beam when the concealed headlamp device is fully open.

EFFECTIVE DATE: October 23, 1987.

FOR FURTHER INFORMATION CONTACT: Richard Van Iderstine, Office of Rulemaking, NHTSA, Washington, DC (202-366-5280).

SUPPLEMENTARY INFORMATION: Paragraph S4.5 of Safety Standard No. 112, *Headlamp Concealment Devices* states that "After December 31, 1969, the headlamp beam of headlamps that illuminate during opening and closing of the headlamp concealment device may not project to the left of or above the position of the beam when the device is fully opened." In the view of Chrysler Corporation, this requirement imposes a design restriction on those types of rotating headlamp systems "which, although they project a beam of light very slightly to the left during opening and closing do so at a point in their travel that does not produce glare in the eyes of oncoming drivers."

Chrysler specifically references its 1987 Dodge Daytona model which is equipped with a retracting headlamp system. In order to adapt the system to the car's front end sheet metal, it was necessary to design the system so that in opening and closing it moves through "a laterally outboard 7 mm truncated arc." As a result, the right headlamp momentarily projects a beam of light to the left of center, which, however, is not above the position of the beam when the device is fully opened. Chrysler can meet the requirement through "incorporating a complex and costly electronic switching system to illuminate the headlamps only when they are fully opened and to turn out the light during opening and closing."

Because it does not believe that the low candela of the lamp during its arc are sufficient to cause glare, Chrysler petitioned for rulemaking to amend paragraph S4.5 to establish an exception to the prohibition of beam projection to the left. The exception would be "when the maximum allowable photometric values at the points at or above V=0.5 (glare test points) are not exceeded during any portion of the headlamp's travel." That exception, if adopted, would allow light intensities permitted by Standard No. 108, rather than limit the glare intensity to that achieved by the specific lamp under present positional constraints.

In the agency's opinion, however, Chrysler's proposed amendment is problematic. Regardless of the motion of the beam during movement to the final position of the lamp, headlamp beams do not uniformly decrease in intensity from their hot spots (i.e., brightest part of beam) radially outward. Because small higher intensity areas can randomly occur in larger areas of lower intensity, any concealed headlamp could produce higher intensities at various test points during its travel than when fully open. Therefore, even concealed headlamps whose motion complies with Standard No. 112 could become noncompliant with a procedure that uses performance relative to the photometry in Standard No. 108 as the criterion.

The safety problem that paragraph S4.5 is intended to address is the effect of transitory glare upon drivers of other motor vehicles. The agency believes that such effects are minimal in comparison with the incidence of transitory glare that motorists already experience, such as created by oncoming upper beams, or by lower beams during changes in vehicle position (rounding corners) or attitude (coming over the brow of a hill). Although undue glare in any form is undesirable, and manufacturers should design their headlighting systems so that glare in any form is reduced, the agency has concluded that S4.5 represents a design restriction that is not required to serve the interests of motor vehicle safety.

Therefore, on February 27, 1987, the agency proposed the deletion of S4.5, and proposed that S4.6 be renumbered, and that reference to its effective date ("after December 31, 1969") be removed. (52 FR 5975)

Nine comments were received on the proposal. Seven of the commenters supported it. The States of California and Minnesota did not support deletion of the requirement but favored retaining it in a more performance oriented form.

In Minnesota's opinion, even though the transient effect may be minimal, there was nothing to prevent the beam from remaining in a left and up position should there be a malfunction of the concealment device during the transition from closed to open, or vice versa. Such a failure could cause significant glare to other drivers until the malfunction was corrected. The agency considered Minnesota's argument a plausible one. However, NHTSA's Office of Defects Investigation reported that its files from June 1981 to date contained no complaints about a malfunction in which a device failed in a semi-open position. Of the 15 complaints received, 8 reported failure to open, and 4 a failure to close from the fully open position. Therefore the problem presented by the Minnesota comment appeared theoretical rather than actual, and NHTSA is amending Standard No. 112 as proposed.

NHTSA has considered this rule and has determined that it is not major within the meaning of Executive Order 12291 "Federal Regulation" or significant under Department of Transportation regulatory policies and procedures, and that neither a regulatory impact statement nor a regulatory evaluation is required. Since use of concealed headlamp systems is optional and because the amendment would relieve a restriction, the rule will not impose additional requirements or costs but will permit manufacturers greater flexibility in the design of headlamp systems.

NHTSA has analyzed this rule for the purposes of the National Environmental Policy Act. The rule will have no effect upon the human environment since there will be no change in the weight and quantity of materials used in the manufacture of headlamp concealment devices.

The agency has also considered the impacts of this rule in relation to the Regulatory Flexibility Act. I certify that this rule will not have a significant economic impact upon a substantial number of small entities. Accordingly, no initial regulatory flexibility analysis has been prepared. Manufacturers of motor vehicles, those affected by the rule, are generally not small businesses within the meaning of the Regulatory Flexibility Act. Finally, small organizations and governmental jurisdictions will not be significantly affected since the price of new vehicles will be minimally impacted.

Because of the necessity for the petitioner and other vehicle manufacturers to plan production on an orderly basis, it is found that an effective date earlier than 180 days after issuance of the final rule is in the public interest.

The engineer and lawyer primarily responsible for this rule are Richard Van Iderstine and Taylor Vinson, respectively.

List of Subjects in 49 CFR Part 571

Imports, Motor vehicle safety, Motor vehicles, Rubber and rubber products, Tires.

In consideration of the foregoing, 49 CFR Part 571 and 571.112, Motor Vehicle Safety Standard No. 112, *Headlamp Concealment Devices*, are amended as follows:

PART 571—[AMENDED]

1. The authority citation for Part 571 continues to read as follows:

Authority: 15 U.S.C. 1392, 1401, 1403, 1407; delegation of authority at 49 CFR 1.50.

§ 571.112 [Amended]

2. Paragraph S4.5 of § 571.112 is removed.

3. Paragraph S4.6 of § 571.112 is redesignated S4.5 and the phrase "after December 31, 1969" is removed.

Issued on: September 17, 1987.

Diane K. Steed,

Administrator.

[FR Doc. 87-21887 Filed 9-22-87; 8:45 am]

BILLING CODE 4910-59-M

DEPARTMENT OF THE INTERIOR

Fish and Wildlife Service

50 CFR Part 26

Public Access, Use and Recreation; Back Bay National Wildlife Refuge, VA

AGENCY: Fish and Wildlife Service, Interior.

ACTION: Final rule.

SUMMARY: The Fish and Wildlife Service (Service) is revising special regulations concerning public access, use, and recreation on the Back Bay National Wildlife Refuge (NWR), which were published in the **Federal Register** on May 28, 1980 (45 FR 35823), January 13, 1983 (48 FR 1501), September 1, 1983 (48 FR 39661), and February 19, 1987 (52 FR 5159). This final rule relaxes certain limitations and clarifies eligibility criteria on vehicular access through the Back Bay NWR by revising 50 CFR 26.34. It also incorporates the provisions of Pub. L. 96-315, approved on July 25, 1980, and Pub. L. 98-146, approved on November 4, 1983. Pub. L. 98-146 amended Pub. L. 96-315 to allow access for "up to 15 additional" permittees who met specific conditions for access. A notice concerning this revision appeared in the **Federal Register** (48 FR 46862) on October 14, 1983.

EFFECTIVE DATE: September 23, 1987.

FOR FURTHER INFORMATION CONTACT: Anthony D. Leger, Refuge Manager, Back Bay NWR, 4005 Sandpiper Road, P.O. Box 6286, Virginia Beach, Virginia 23456; Telephone 804-721-2412.

SUPPLEMENTARY INFORMATION: On February 19, 1987, there appeared in the **Federal Register** (52 FR 5159) a proposed rule on Special Regulations Concerning Public Access, Use and Recreation on the Back Bay NWR. Interested persons were allowed 60 days in which to submit written comments, suggestions, or objections, with respect to the proposed rule. Several written comments were received. After consideration of all comments, suggestions and objections, several suggested changes from the proposed rule were adopted.

Background

For many years, Back Bay NWR was open to the public for a number of purposes, and free access to the beach by vehicles was permitted. In 1961, less than 10,000 persons used the refuge for various purposes. During the late 1960's, the development of lands south of the refuge for recreational/residential purposes and the increase in availability and popularity of off-road recreational vehicles, resulted in sharply accelerated use. By 1970, the number of persons using the refuge had increased to 235,000 and in 1971, to 348,000. All but a small fraction of this increase involved off-road vehicular use across the beach portion of the refuge. By 1969, it became evident that total public use had resulted in environmental degradation to the extent that a serious conflict existed with respect to the administration of the entire refuge for its intended purposes. Following careful analysis it was determined that certain controls of vehicular uses of the beach were requried to reverse the trend of refuge habitat destruction.

On January 12, 1972, the Service provided notice in the **Federal Register** (37 FR 447) that the Back Bay NWR would be closed to use by unauthorized vehicles. An Environmental Impact Statement (EIS) assessing the impacts of this restriction was prepared (FES 72-33, 1973). A final rule was published on February 28, 1973, that required authorized users to obtain permits for access. Recreational vehicle traffic was prohibited. Permits were issued to property owners in the proposed False Cape State Park area, permanent full-

time residents of the Outer Banks in North Carolina and their visitors, commercial fishermen, emergency service vehicles and schools buses. Implementation of the rule was followed by legal action in a suit against the Service in the District Court for the Eastern District of Virginia (*Coupland, et al.* v. *Morton, et al.*). A final decision was handed down by Judge John MacKenzie on February 26, 1975 (Civil Action No. 145–73–N), fully upholding the authority of the Secretary of the Interior to control vehicular access across the Back Bay NWR. This order was ultimately upheld by the Fourth Circuit Court of Appeals in a decision issued on July 7, 1975.

The matter of regulating beach use at Back Bay NWR continued to be the subject of considerable discussion by the many persons denied vehicular access to recreational properties in North Carolina. On July 29, 1976, following the preparation of an Environmental Assessment (EA), a liberalized rule (41 FR 31537) was issued which provided limited access eligibility not just to permanent residents of the area as the previous rule had provided, but to all persons who, as of October 6, 1975, owned improved property on the Outer Banks of Currituck County, North Carolina, from the Virginia State line south to and including the village of Corolla, North Carolina.

In order to mitigate the impact on the beach by these additional permittees, it was necessary to place more restrictions on, and limit the number of round trips per day for, permanent full-time residents living between the south boundary of the refuge and the village of Corolla, North Carolina. Based on the restricted access imposed on the permanent full-time residents by the 1976 regulations (41 FR 22361) and the permit program management experience gained from the 1976 and 1977 (42 FR 23151) regulations, the 1978 rule (43 FR 28314) continued to provide access to qualified permanent full-time and part-time residents. These special regulations also provided notice that the refuge beach would be closed to vehicular traffic after December 31, 1979. Subsequently, in an effort to avoid undue hardship on permanent residents who had established residency prior to December 31, 1976, an interim rule was published on December 13, 1979 (44 FR 72161), which provided for access for those permanent residents only. Public comments on this interim rule were invited. All comments submitted by January 31, 1980, were given consideration.

The final rule on Back Bay NWR access, as published on May 28, 1980 (45 FR 35823), provided access for those permanent full-time residents who could provide adequate proof of continuous residency commencing prior to December 31, 1976, on the Outer Banks from the refuge boundary south to and including the village of Corolla, North Carolina. The south boundary of the area for access was defined as, "A straight east-west line extending from Currituck Sound to the Atlantic Ocean and passing through a point 1,600 feet due south of the Currituck Lighthouse." The May 28, 1980, rule also denied a petition for rulemaking received from the Outer Banks Civic League and Pacific Legal Foundation to allow access through Back Bay NWR for part-time residents of the Outer Banks and False Cape State Park.

On July 25, 1980, President Carter signed Pub. L. 96–315 which provided that any time regulations limiting access to the refuge are issued, the Secretary of the Interior shall issue to any "eligible applicant" a permit to enable the applicant to commute across the refuge. The term "eligible applicant" was defined to include: "All full-time residents who can furnish adequate proof of residency commencing prior to December 31, 1979, on the Outer Banks from the refuge boundary south to and including the village of Corolla, North Carolina, as long as they remain full-time residents." The south boundary was defined as a "straight east-west line extending from Currituck Sound to the Atlantic Ocean and passing through a point 1,600 feet due south of the Currituck Lighthouse." On August 7, 1980 (45 FR 52391), the Back Bay access regulations were modified to reflect the legislation.

On September 18, 1981, the Assistant Secretary for Fish and Wildlife and Parks published in the **Federal Register** (46 FR 46358) a Notice of a Petition for Rulemaking submitted by the Virginia Wildlife Federation and the Pacific Legal Foundation seeking the extension of access privileges through the refuge to part-time residents of the Outer Banks. On January 13, 1983, the Service published in the **Federal Register** (48 FR 1501), an extension of the May 28, 1980, regulations (including the August 7, 1980, modification) governing access. The extension was necessary, until revised rules could be issued, so that orderly management of the Back Bay NWR would not be compromised.

On September 1, 1983, the Assistant Secretary published in the **Federal Register** (48 FR 39661), a proposed rule and denial of petition. The proposed rule included the same changes contained in the **Federal Register** notice of October 14, 1983, outlined below, with the exception of the provision dealing with access essential to maintaining a livelihood. As a result of the passage of Pub. L. 98–107 and the associated **Federal Register** notice (48 FR 46862), finalization of this proposed rule was unnecessary. On November 4, 1983, Pub. L. 98–107 was replaced by Pub. L. 98–146. The provisions of both laws as they relate to access through the Back Bay NWR are identical.

On October 14, 1983, the acting Director published in the **Federal Register** (48 FR 46862) a Notice of Rulemaking. This notice incorporated the provisions of Pub. L. 98–107 into the Back Bay NWR access regulations. Pub. L. 98–107, an amendment to Pub. L. 96–315, stipulates that additional access permits may be issued as follows: "Up to 15 additional permits shall be granted to those persons meeting any one of the following conditions:" (1) A resident as of July 1, 1982, who held a valid Service access permit for improved property owners at any time during the period from July 29, 1976, through December 31, 1979. (2) Anyone in continuous residency since 1976 residing in the area bounded on the north by the refuge boundary and on the south by a straight line passing through a point on the east-west prolongation of the centerline of Albacore Street, Whaleshead Club Subdivision, Currituck County, North Carolina. (3) Any permanent, full-time resident as of April 1, 1983, not otherwise eligible who can substantiate to the Secretary of the Interior that access is essential to their maintaining a livelihood."

In December 1986, the U.S. General Accounting Office (GAO) issued a final report making several recommendations to the Service concerning vehicular access permits. This final rule implements the recommendations contained in the final report. This rulemaking incorporates several minor changes to the existing regulations which further clarify eligibility, provide for the needed regulation of access permits and relax certain limitations on access. This final rule supplements the general regulations that govern access and recreation on wildlife refuges as set forth in Title 50 of the Code of Federal Regulations. The Back Bay NWR, comprising approximately 4,600 acres, is delineated on a map available from the refuge manager or the Regional Director. The policy of the Department of the Interior, whenever practical, is to afford the public an opportunity to participate in the rulemaking process. Public

comments on the proposed rulemaking were invited. All comments submitted by April 20, 1987, were given consideration.

Analysis and Discussion of Public Comments

In summary, of the 44 comments received, 6 supported the adoption of the proposed regulations or more liberal regulations, and 38 opposed the proposed regulations or favored making them more restrictive. Comments on the proposed rule were significant and indicated that further revisions of the proposed rule were necessary.

Issue: Additional vehicular traffic contradicts the original intent of the permit access system.

Response: Thirteen respondents opposed the regulations because they felt that the rule provided for additional permits or a significant increase in beach travel. The 15 additional permits referred to in the rule relate to the number authorized by Pub. L. 98-146 which was passed in 1983. With the exception of medical access waivers, no additional permits beyond this congressionally-mandated number are authorized for issuance. Additional trips will be made under the provisions relating to commercial service vehicles. These trips will be minimized, however, due to the emergency-only nature of the trips. The original intent of the access permit system was to provide access only to qualified individuals (later defined as permanent residents) who met specific criteria. This is still the intent of the Service. The additional traffic allowed under this final rule is expected to be extremely minimal. The restrictions retained in the rule ensure that access will remain compatible with the purposes for which the refuge was established.

Issue: Fragile ecosystems and wildlife should not be compromised for the convenience of individuals who moved to North Carolina knowing that they did not qualify for access.

Response: Thirteen respondents made this point. The Service agrees that individuals who moved to the Outer Banks after well-defined and widely publicized cut-off dates should not be provided access. With the exception of medical access waiver permits, additional permits will not be issued to residents of the Outer Banks who established permanent residency after the congressionally mandated cut-off dates.

Issue: The Service should implement the December 1986 GAO report which recommends that permit holders who are granted vehicular access be required to provide sufficient evidence of eligibility or have their permits revoked.

Response: Three respondents expressed this viewpoint. The timing of the GAO report and the subsequent publication of proposed regulations was such that the two formerly independent actions have now been combined. The publication of this final rule is the first step towards conducting a more effective and efficient access permit program. Shortly after the finalization date of this rule, the Service, through the refuge manager, Back Bay NWR, will implement the recommendations of the GAO report. At that time the Service will require those permittees who lack adequate documentation of their access eligibility to provide this information and will ensure that permits are issued only to those who legally qualify for them.

Issue: There should be year-round, 24-hour access through the refuge for permittees.

Response: Three respondents expressed this opinion, while four stated the opposite viewpoint (opposed even a seasonal relaxation of the midnight cut-off time). Since the early 1970's the hours of access have been relaxed several times. In practice, the refuge manager regularly makes exceptions to the 12 midnight cut-off for permittees who work late, attend meetings, etc. A limited amount of travel occurs after midnight and a significant increase is not expected as a result of this change.

The revised rule would relieve the access permittees of the burden of receiving advance approval from the refuge manager for those occasional situations when late night travel is required. No additional trips through the refuge would occur as a result of this rule change. Nesting sea turtles and other wildlife would continue to be protected during the critical summer periods when the restriction on travel from midnight to 5 a.m. would be in effect. Furthermore, one respondent felt that the regulation would be unenforceable without increased regulatory expense and that the increased cost would be diverted from wildlife-related projects. In early 1987, the refuge staffing pattern was reorganized to place appropriate emphasis on wildlife, interpretation, education and law enforcement activities. Within this current staffing arrangement, adequate patrols will be made to guarantee compliance with all refuge special regulations. In addition, the installation of the computer-operated gate in 1985 provides the refuge with data on beach access 24 hours per day. Finally, special "Resource Problem" funding is received at the refuge level to properly administer the motor vehicle access program without detriment to wildlife related projects.

Issue: The medical access waiver provision is too vague. The Service should provide clear guidelines regarding the necessary documentation required to establish eligibility. Second or third medical opinions should be required. Part-time residents should not qualify for medical access over permanent residents who missed the cut-off dates. Emergency medical access is already allowed, thus there is no necessity to grant additional access permits for medical convenience.

Response: The Service began issuing "medical access waivers" in the early 1980's out of a desire to administer the access program in a humanitarian manner. The primary criterion for a medical access waiver was: "that life-threatening situations may result from more arduous travel conditions." To date six such permits have been issued. Of these six, five are not residents of North Carolina. The Service agrees that providing access to other than permanent residents is not in keeping with the stated intent of the access program. Furthermore despite Service efforts to be sensitive to the needs of individuals whose health has deteriorated, the medical access waiver provision gives the appearance that the Service is providing access to non-residents to the exclusion of residents of North Carolina. This very fact was pointed out by two permanent residents in their written comments on the proposed rule. It was also an area of significant concern in the GAO report. With the explosion in the number of vacation and retirement homes on the North Carolina Outer Banks since the 1970's, and the aging of the population as a whole, the Service agrees that this special access privilege has the potential to become a major program in itself.

In recent years the Service has taken a very liberal approach regarding access for medical purposes for permittees and non-permittees alike. The Service would not deny access off the Outer Banks to any resident of North Carolina who requires emergency medical attention in the Norfolk, Virginia, area. In addition, the Sandbridge, Virginia, rescue squad and the Corova and Corolla, North Carolina, rescue squads have been issued gate cards so that they have unimpeded use of the beach in an emergency. The refuge monitors the radio communications of these rescue squads and strives to assist with access where possible. The Service believes that it is preferable to have trained

emergency medical personnel transport persons involved in a medical emergency off the beach, rather than to have such transport accomplished by individuals without the training or experience to do so.

Therefore, the Service has amended the rulemaking to show that no additional medical access waiver permits will be issued after December 31, 1987. Those who currently hold these permits will continue to be granted access. However, additional medical access waiver permits will be issued only to permanent full-time residents of North Carolina. Medical access waiver permits will be subject to review prior to the issuance or reissuance of an access permit and at three (3) year intervals thereafter. A provision for a second medical opinion has been added to the regulations. This second opinion will be provided for at Service expense by a government designated physician.

Issue: Commercial business employees should provide documentation verifying their employment.

Response: This concern was also raised in the GAO report. The present system allows the employer to notify the refuge manager anytime a change occurs in his employees. In addition to written notification, a W-4 form is sometimes submitted. For commercial fishing crew members who work on a "share of the catch" basis, a statement indicating their "share" of the catch is considered sufficient proof of employment. The Service has been criticized for failing to require substantiating documentation for these employees. The final rule has been modified to address this area of concern. All commercial permit holders will be required to present adequate employment documentation (i.e., signed W-4 forms, W-2 forms, 1099 forms, earnings statements or paycheck stubs, employee income tax withholding submissions to State and Federal tax offices (IRS form W-3 with W-2s attached)), or other acceptable proof of actual employment for all designated employees. No determination of employment legitimacy and therefore access eligibility is possible without this documentation.

It must be recognized that this is an extremely difficult area for the Service since some individuals are very reluctant to divulge employment information; however, it is impossible to verify employment status without it. In those cases where documentation is not presented, employee access will not be granted.

Issue: Permittees should be able to transport in their vehicles whomever they want.

Response: It has always been the intent of the Service to minimize, to the greatest extent possible, the inconvenience to bona fide permittees who utilize the refuge beach as an access route. Passengers in permittee operated vehicles are adequately covered under section (a)(5) of the final rule. The Service, through rulemakings dating back to 1972, has notified the public of its intent to provide access only to those who meet specific criteria. Access is provided to minimize the inconvenience (to certain qualified individuals) of the Service's decision to limit beach travel for the protection of the resource. Access is not granted to permittees for the purpose of transporting those who do not meet the well-defined criteria. Section (a)(5) clarifies the regulations so that there is no misunderstanding of the Service position in this matter.

Issue: The Service's restriction on dike road traffic is inconsistent with policies at other refuges where dike traffic is allowed.

Response: The decision on whether to allow vehicles on Service roadways and dikes is made on a refuge by refuge basis. These decisions are based on a number of criteria including: Condition of the dike (road) surface and substrate, amounts of expected traffic, degree of disturbance to wildlife, wilderness designation, management capability, etc. At Back Bay, the dike roads were not designed for daily vehicular traffic. Furthermore, environmental reviews have consistently evaluated travel on the refuge beach, which is the historic route of travel. The Service considered allowing access on a road behind the dunes in an EIS issued in 1972, but rejected the use of such a road by automobiles.

Issue: Motor vehicle access permittees depend on the Virginia Beach area for services and therefore require more than emergency access for commercial service vehicles.

Response: Three respondents supported the contention that "emergency" commercial service access was inadequate to meet the needs of North Carolina residents who have access permits. Four others felt the proposed action was vague, or would lead to a significant increase in travel.

It is the intent of the Service to provide access for essential commercial service vehicles only when no reasonable alternative access exists, or in emergency situations. Section (h)(1) has been revised to clarify this point. Since access across State lands is necesary, the permittee is responsible for securing concurrence from the Superintendent of False Cape State Park.

In the May 6, 1977, final rule (42 FR 23151) the Service addressed the issue of commercial service vehicle access during hours other than 8 a.m. to 5 p.m., Monday thru Friday. The refuge manager, upon reasonable notification, will be able to authorize trips outside the prescribed time periods for emergency repair situations should they arise.

Issue: State park concerns have not been taken into account by the Service in formulating the proposed rule.

Response: The Director of the Virginia Department of Conservation and Historic Resources responded on behalf of False Cape State Park (FCSP). The local U.S. Congressman wrote in support of the State's position. In summary, the State was concerned with the following: (1) Additional access permits through the refuge must receive concurrence from FCSP, (2) 24 hour access will greatly increase the workload for FCSP staff, (3) access for commercial vehicles must be approved by the FCSP Superintendent, (4) criteria must be given for medical access waivers, (5) the manager has too much authority under the provisions for suspension or waiver of rules, (6) access to the FCSP for Environmental Education related purposes could be restricted, and (7) FCSP staff need additional trips (beyond two per day).

The Service does not dispute the authority of the State to administer access through the FCSP. In the past, the State has chosen to concur in most access decisions made by the Service. Recently, the State has taken a more active role in administration of its permit system and the management of FCSP. Nothing in this final rulemaking should be construed as binding the FCSP to allow any specific type of access. The State has the authority to permit or deny access through its lands subject to the provisions of State law.

The issues of 24 hour travel, commercial service vehicles, and medical access waivers have been addressed above. It is not appropriate for the Service to address State workforce constraints.

The refuge manager has authority to suspend or waiver the access rules under section (k) of this final rulemaking. This authority is similar to that which is exercised by all refuge managers as outlined in various sections of 50 CFR Parts 25, 26, and 27. These provisions are expanded upon here, due to the unique nature of the motor vehicle access situation. In the past, FCSP activities have been covered in a

Special Use Permit which was issued by the refuge manager. Due to an oversight, no permit was issued in 1986. The refuge manager will issue an annual Special Use Permit to the FCSP to clarify access through the refuge to FCSP. On May 28, 1980, the Service issued a final rule governing motor vehicle access across Back Bay NWR. In this rule, access for FCSP employees was addressed for the first time. A statement under section (g) of the rule stated that FCSP employees would be granted access. In the discussion of major comments on this rulemaking, the Service rejected access for vistors of FCSP employees since, "* * * No other class of permittees is authorized visitor access * * *." It was clearly the intent of the Service that these employees were bound by the regulations imposed on all other permittees. In the September 1983 proposed rule, the Service clarified this issue by stating that FCSP employees would be considered as permanent full-time residents with access privileges identical to those of other permittees. This language is retained in this final rule. Despite the State's concerns on this issue, it would be inconsistent for the Service to allow additional trips for State employees due to the nature of their employment, or their status as Virginia residents. To the maximum extent possible the Service strives to treat all permittees equally. To do otherwise would undermine the credibility of the access program.

Differences Between the Proposed Rule and the Final Rule

As a result of public comments, several changes were incorporated into this final rule. Minor wording changes are incorporated in various sections of the final rule.

Section (a)—All eligibility criteria contained in Pub. L. 96–315, enacted in 1980 and Pub. L. 98–146, enacted in 1983 have been cited in this section. In section (a)(5)—the following statement was added "Permits are not transferable by sale or devise."

Section (f) on Military, fire, or emergency vehicles was modified by adding the following: "Continuous or recurring use of the beach for other than emergency purposes shall require the issuance of a permit from the refuge manager."

Section (g) concerning public utility vehicles was amended to include provisions for the issuance of an access permit.

A minor wording change was made in section (h), Essential commercial service vehicles, to clarify that access for this purpose will only be allowed if no reasonable alternative to the access exists as determined by the refuge manager.

Section (j)(1) was amended to specify that commercial fishing businesses must have "continuously" operated since 1972. In addition, the following statement was added: "Commercial permits are not transferable by sale or devise. The level of commercial permittee travel across the refuge shall not increase above the average yearly levels maintained in the 1985 to 1987 period." Section (j)(2) was amended to apply the standards outlined for commercial fishermen to other businesses. Language was added to section (j)(4) specifying the types of "appropriate documentation" for commercial business employees.

In section (k)(4)(i) improved property owners were dropped from eligibility for medical access waivers. New sections (k)(4) (ii) and (iii) were added to provide for periodic reviews of medical access waiver permits and Service designated and funded second medical opinions respectively. Section (k)(4)(iv) was added to include a cut-off date beyond which no medical waiver permits would be issued and (k)(4)(v) was included to grandfather current non-resident medical access permit holders.

Section (m)(1) underwent a minor wording change. Section (m)(2) was modified to include a prohibition on towing, transporting, or operating vehicles owned by non-permit holders. This change is consistent with the intent of the regulations issued since 1980 which provided access for qualified permanent residents only and supports the language in section (a)(5) of the rule. Section (m)(5) was modified to include a prohibition against access "for any other purposes not covered in this rule."

Section (o), Beach-oriented uses, was amended to incorporate a change in refuge management activities which occurred during 1987 under the manager's authority to close any portion of the refuge "to protect the resources of the area." This authority is codified in 50 CFR 25.21, 25.31, and 29.3.

Section (r) was modified to specify the months in which pets are permitted. Section (s)(2) was added to require a permit for groups exceeding 10 individuals.

Since these regulations relieve restrictions to allow the issuance of medical access waiver permits, the Service has determined under the provisions of 5 U.S.C. 553(d) that good cause exists to make these regulations effective upon publication in the **Federal Register**.

Conformance With Statutory and Regulatory Authorities

The National Wildlife Refuge System Administration Act of 1966, as amended, (16 U.S.C. 668dd), authorizes the Secretary of the Interior to permit the use of any area of the Refuge System for any purpose, including access, whenever he determines that such uses are compatible with the major purposes for which the area was established. The Back Bay NWR was established by Executive Order 7907, June 6, 1938, "as a refuge and breeding ground for migratory birds and other wildlife."

The limited use permitted by these regulations is compatible with the major purposes for which the Back Bay NWR was established. This determination is based upon consideration of, among other things, the initial EIS on Motor Vehicle Access (FES 72–33, 1973), the EA completed December 12, 1975, the Service's final EIS on the proposed State-Federal land exchange involving portions of False Cape State Park and Back Bay NWR, and the EA prepared on the proposed rulemaking September 1, 1983.

Paperwork Reduction Act

Information collection is required for obtaining a vehicular access permit. The information is necessary to determine eligibility of applicants, and failure to respond may result in permit denial. This information collection has been approved by the Office of Management and Budget (OMB) under number 1018–0014. This rule will not modify the information collection requirements authorized by OMB.

Environmental Considerations

EAs have been prepared on previous rules and are available for public inspection at: Back Bay NWR, 4005 Sandpiper Road, P.O. Box 6286, Virginia Beach, Virginia 23456; and Virginia Beach Public Library, Operations Building, Room 300, Courthouse Complex, Virginia Beach, Virginia 23456.

Copies of EAs can also be obtained by addressing Regional Director, U.S. Fish and Wildlife Service, One Gateway Center, Suite 700, Newton Corner, Massachusetts 02158.

Economic Effects

This rule involves local, private residents only. Small entities will not be significantly affected. Accordingly, the Department of the Interior has determined that this rule is not a "major rule" within the meaning of Executive Order 12291 (February 19, 1981, 46 FR 13193) and will not have a significant economic effect on a substantial number

of small entities within the meaning of the Regulatory Flexibility Act (5 U.S.C. 601 *et seq.*), nor does this rulemaking require preparation of a regulatory analysis. This conclusion is based on the finding that no substantial costs, if any, should result for any small entity.

Drafting Information

The following individuals participated in the writing of these regulations: Anthony Leger, Edward Moses and Patricia Martinkovic.

List of Subjects in 50 CFR Part 26

National Wildlife Refuge System, Recreation, Wildlife refuges.

Accordingly, Part 26 of Chapter I of Title 50 of the Code of Federal Regulations is amended as set forth below:

PART 26—[AMENDED]

1. The authority citation for Part 26 is revised to read as follows:

Authority: 5 U.S.C. 301; 16 U.S.C. 460k, 664, 668dd, 715i; Pub. L. 96–315 (94 Stat. 958) and Pub. L. 98–146 (97 Stat. 955).

2. The special regulations governing public access, use and recreation on Back Bay NWR in § 26.34 are revised to read as follows:

§ 26.34 Special regulations concerning public access, use and recreation for individual national wildlife refuges.

Virginia

Back Bay National Wildlife Refuge

Access

(a) *Access qualifications and specifications.* (1) As provided for in Pub. L. 96–315, permanent, full-time residents who can furnish to the refuge manager, Back Bay NWR, adequate proof of continuous and continuing residency, commencing prior to December 31, 1979, on the Outer Banks from the refuge boundary south to and including the village of Corolla, North Carolina, as long as they remain permanent, full-time residents. The south boundary of the area for access consideration is defined as a straight east-west line extending from Currituck Sound to the Atlantic Ocean and passing through a point 1,600 feet due south of the Currituck lighthouse. "Residence" means a place of general abode; "Place of general abode" means a person's principal, actual dwelling place in fact, without regard to intent. A "dwelling" means a residential structure occupied on a year-round basis by the permit applicant and shall not include seasonal or part-time dwelling units such as beach houses, vacation cabins, or structures which are intermittently occupied.

(2) As provided for in Pub. L. 98–146, "Up to 15 additional permits shall be granted to those persons meeting any one of the following conditions:"

(i) A resident as of July 1, 1982, who held a valid Service access permit for improved property owners at any time during the period from July 29, 1976, through December 31, 1979.

(ii) Anyone in continuous residency since 1976, in the area bounded on the north by the refuge boundary, and on the south by a straight line passing through a point in the east-west prolongation of the centerline of Albacore Street, Whaleshead Club Subdivision, Currituck County, North Carolina.

(iii) Any permanent, full time resident as of April 1, 1983, residing in the area outlined in paragraph (a)(2)(ii) of this section and not otherwise eligible, who can substantiate to the Secretary of the Interior that access is essential to their maintaining a livelihood; so long as they maintain full-time continuous employment in the Norfolk, Virginia, area may qualify for access.

(3) The burden of proving that the prospective permittee meets these criteria shall be on the applicant by presentation of adequate documentation to the refuge manager. Permittees may be required to submit additional documentation of their eligibility to the refuge manager in order to maintain access. Permits will be issued only to those who legally qualify for them.

(4) Only one permit will be issued per family. All permits issued will be terminated in the event that alternate access becomes available during the permit period.

(5) Permits are issued for the purpose of providing ingress and egress across the refuge beach to the permittee's residence. Personal access is limited to permittees, their families, relatives, and guests while being transported in the permittee's vehicle. "Personal access" means private, non-commercial use. Permits are not transferable by sale or devise.

(6) All vehicle occupants must provide positive identification upon the request of any refuge official.

(b) *Routes of travel.* Access to, and travel along, the refuge beach by motorized vehicles may be allowed between the dune crossing at the key card operated gate near the refuge headquarters, and the south boundary of the refuge only after a permit has been issued or authorization provided by the refuge manager. Travel along the refuge beach by motorized vehicle shall be below the high tide line, within the intertidal zone, to the maximum extent practicable. This may require permittees to adjust their travel times to avoid high tides which would require the use of the emergency storm access/evacuation route over the east dike.

(c) *Number of trips allowed.* Permittees and members of their immediate families residing with them are limited to a total of two round trips per day per household.

(d) *Hours of travel.* Travel along the designated route is permitted 24 hours per day from October 1 through April 30. Travel is restricted to the hours of 5:00 a.m. to 12:00 midnight from May 1 through September 30.

(e) *Medical emergencies.* Private vehicles used in a medical emergency will be granted access. A "medical emergency" means any condition that threatens human life or limb unless medical treatment is immediately obtained.

The vehicle operator is required to provide the refuge manager with a doctor's statement confirming the emergency within 36 hours after the access has occurred.

(f) *Military, fire or emergency vehicles.* Military, fire, emergency or law enforcement vehicles used for emergency purposes may be granted access. Vehicles used by an employee/agent of the Federal, State or local government, in the course of official duty other than for emergency purposes, may be granted access upon advance request to the refuge manager. Continuous or recurring use of the refuge beach for other than emergency purposes shall require the issuance of a permit from the refuge manager.

(g) *Public utility vehicles.* Public utility vehicles used on official business will be granted access. A permit specifying the times and types of access will be issued by the refuge manager. A "public utility vehicle" means any vehicle owned or operated by a public utility company enfranchised to supply Outer Banks residents with electricity or telephone service.

(h) *Essential commercial service vehicles.* (1) Essential commercial service vehicles on business calls during the hours of 8 a.m.–5 p.m. Monday through Friday will be granted access, only upon prior approval of the refuge manager when responding to a request from a permittee. Such requests may be verbal or in writing. Access by essential commercial service vehicles will be granted only after all other reasonable alternatives to access through the refuge have been exhausted as determined by the refuge manager.

(2) "Commercial service vehicle" means any vehicle owned or operated by or on behalf of an individual,

partnership, or corporation that is properly licensed to engage entirely in the business of furnishing emergency repair services, including but not limited to plumbing, electrical, and repairs to household appliances.

(3) Emergency situations. The refuge manager, upon reasonable notification, will be able to authorize essential service/emergency repair access, outside the prescribed time periods, for emergency situations should they arise.

(i) *False Cape State Park employees.* False Cape State Park and Virginia Game Commission employees who are residents in the park will be considered as permanent, full-time residents as defined in § 26.34(a) with access privileges identical to those of other permittees with beach access privileges.

(j) *Commercial fishermen, businesses and their employees.* (1) Commercial fishermen who have verified that their fishing operations on the Outer Banks of Virginia Beach, Virginia, or Currituck County, North Carolina, have been dependent since 1972 on ingress and egress to or across the refuge are granted permits for access. Travel through the refuge by commercial fishermen from Currituck County, North Carolina, will be permitted only when directly associated with commercial fishing operations. Drivers and passengers on trips through the refuge are limited to commercial fishing crew members. A "commercial fisherman" means one who harvests finfish by gill net or haul seine in the Atlantic Ocean, and who has owned and operated a commercial fishing businesses continuously since 1972. Commercial permits are not transferable by sale or devise. The level of commercial permittee travel across the refuge shall not increase above the average yearly levels maintained in the 1985–1987 period.

(2) Other businesses who have verified that their business operations on the Outer Banks of Currituck County, North Carolina, have been dependent since 1972 on ingress and egress to or across the refuge will be granted permits for access in accordance with the limitations outlined in paragraph (j)(1) of this section.

(3) Each commercial fisherman or other business may be granted a maximum of five designated employees to travel the refuge beach for commercial fishing or other business-related purposes only. Commercial fishing employees may carry only other commercial fishing employees as passengers. Other business employees may carry only other employees of that business. The hauling of trailers associated with the conduct of commercial fishing or other business activities is authorized.

(4) Employees of commercial fishermen and/or other businesses who apply for access permits shall have the burden of proving, by the presentation of appropriate documentation to the refuge manager, that they are an "employee" for purposes of this section of the regulations. Appropriate documentation is defined as the submission of standardized and verifiable employment forms including: Signed W–2 and W–4 forms, IRS form #1099, official earnings statements for specified periods, employee income tax withholding submissions to State and Federal tax offices (e.g., IRS form W–3 with W–2s attached), State unemployment tax information or other proof of actual employment. Documentation for each employee must be submitted in advance of access being granted, or, for new employees, within 30 days of their starting date. Failure to provide verification of employment for new employees within 30 days will result in termination of access privileges.

(k) *Suspension or waiver of rules.* (1) In an emergency, the refuge manager may suspend any or all of the foregoing restrictions on vehicular travel and announce each suspension by whatever means are available. In the event of adverse weather conditions, the refuge manager may close all or any portion of the refuge to vehicular traffic for such periods as deemed advisable in the interest of public safety.

(2) The refuge manager may make exceptions to access restrictions, if they are compatible with refuge purposes, for qualified permittees who have demonstrated to the refuge manager a need for additional access relating to health or livelihood.

(3) The refuge manager may grant one-time use authorization for vehicular access through the refuge to individuals, not otherwise qualified above, who have demonstrated to the refuge manager that there is no feasible alternative to the access requested. Authorization for access under this provision will not be based on convenience to the applicant.

(4) Medical access waiver permits may be issued under the following conditions:

(i) The Regional Director may grant access to non-eligible permanent residents who can show proof that their physical health is such that life-threatening situations may result from more arduous travel conditions. The submission of substantiating medical records is required to be considered for a medical access waiver.

(ii) All medical access waiver permittees will be required to prove that their medical condition is or continues to be such that a life-threatening situation would result from more arduous travel conditions. Such proof shall be required prior to the issuance of an access permit, and at 3-year intervals thereafter.

(iii) A second medical opinion will be required by the Regional Director prior to the issuance or re-issuance of any such permit. This second opinion will be provided for at Service expense, by a government designated physician.

(iv) No additional medical access waiver permits will be issued after December 31, 1987.

(v) Previous holders of medical access waiver permits will retain access subject to paragraph (k)(4) (ii) and (iii) of this section.

(l) *Violation of rules.* Violators of these special regulations pertaining to Back Bay NWR are subject to legal action as prescribed by 50 CFR 25.43 and Part 28, including suspension or revocation of all permits issued to the violator or responsible permittee. The refuge manager may deny access permits to applicants who, during the 2 years immediately preceding the date of application, have formally been charged and successfully prosecuted for three or more violations of these or other regulations in effect at Back Bay NWR. Individuals whose vehicle access privileges are suspended, revoked, or denied may, within 30 days, file a written appeal of the action to the Assistant Regional Director-Refuges and Wildlife, One Gateway Center, Suite 700, Newton Corner, Massachusetts 02158, in accordance with 50 CFR 25.45(c).

(m) *Other access rules.* (1) No permit will remain in effect beyond December 31 of the year in which it was issued. Permits may be renewed upon the submission of appropriate updated information relating to the permit, and a signed statement that the conditions under which the previous permit was issued have not changed. In the event of any changes of conditions under which the permit is granted, the permittee shall notify the refuge manager in writing within 30 days. Failure to report changes may result in suspension/revocation of the permit.

(2) Vehicles shall be operated on the refuge beach only by the permittee or other authorized drivers. Permit holders shall not tow, transport or operate vehicles owned by non-permit holders through the refuge. Non-commercial permit holders may tow utility and boat trailers when being used for their

personal use only. Any towed vehicle shall have advance approval from the refuge manager prior to being brought through the refuge. This access privilege is not to be used for any commercial purpose.

(3) The refuge manager may prescribe restrictions as to the types of vehicles to be permitted to ensure public safety and adherence to all applicable rules and regulations.

(4) A magnetic card will be issued to each authorized driver only for his or her operation of the computer controlled gate. No more than two cards will be issued per family. Only one vehicle will be permitted to pass for each gate opening. Unauthorized use of the magnetic card may result in suspension of the permit. A fee will be charged to replace lost or misplaced cards. Malfunctioning cards will be replaced at no charge.

(5) Access is granted for the purpose of travel to and from the permittee's residence and/or place of business. Access is not authorized for the purpose of transporting individuals for hire, or for the transport of prospective real estate clients to or from the Outer Banks of North Carolina, or for any other purpose not covered in this rule.

General Rules

(n) *Entry on foot, bicycle or motor vehicle.* Entry on foot, bicycle, or by motor vehicle on designated routes is permitted one-half hour before sunrise to one-half hour after sunset for the purposes of nature observation and study, photography, hiking, surf fishing, and bicycling.

(o) *Beach-oriented uses.* Designated areas of the refuge beach are open to wildlife/wildlands-oriented recreation only as outlined in paragraph (n) of this section. Entry to the beach is via designated access points only.

(p) *Parking.* Limited parking at the refuge office/visitor contact station is permitted only in designated spaces. Parking is available on a first-come, first-serve basis for persons engaged in wildlife/wildlands-oriented recreation only as outlined in paragraph (n) of this section.

(q) *Fires.* All fires are prohibited.

(r) *Pets.* Dogs and other pets, on a hand-held leash not exceeding 10 feet in length, are permitted from October 1 through March 31.

(s) *Other general rules.* (1) Pedestrians and vehicular traffic in the sand dunes are prohibited.

(2) Use by all groups exceeding 10 individuals will require a Special use Permit, issued by the refuge manager.

(3) Registered motor vehicles and motorized bicycles (mopeds) are permitted on the paved refuge access road and parking lot at refuge headquarters. All other motorized vehicular use is prohibited, except as specifically authorized pursuant to this rule.

(4) The information collection requirement contained in this rule has been approved by the Office of Management and Budget under 44 U.S.C. 3501, *et seq.*, and has been assigned the number 1018–0014. The information being collected is used to determine eligibility for issuing a vehicular access permit and a response is required to obtain a benefit.

Date: August 26, 1987.

Susan Recce,

Acting Assistant Secretary for Fish and Wildlife and Parks.

[FR Doc. 87–21894 Filed 9–22–87; 8:45 am]

BILLING CODE 4310–55–M

DEPARTMENT OF COMMERCE

National Oceanic and Atmospheric Administration

50 CFR Parts 604 and 641

[Docket No. 50828–7106]

Reef Fish Fishery of the Gulf of Mexico

AGENCY: National Marine Fisheries Service (NMFS), NOAA, Commerce.

ACTION: Final rule.

SUMMARY: NOAA issues this final rule to implement the mandatory reporting requirements prescribed in the Fishery Management Plan for the Reef Fish Resources of the Gulf of Mexico (FMP). The recordkeeping and reporting requirements were initially reserved in the final rule implementing the FMP. This rule provides for the timely collection of catch, effort, and landings data from persons using fish traps, commercial vessel and headboat owners and operators, and seafood dealers and processors.

EFFECTIVE DATE: October 23, 1987, except for § 641.5(g). This rule is being issued prior to approval by the Office of Management and Budget of the information collection requirements of § 641.5(g). When OMB approval is received, a notice will be published in the **Federal Register** making this section effective.

FOR FURTHER INFORMATION CONTACT: William R. Turner, 813–893–3722.

SUPPLEMENTARY INFORMATION: The FMP was prepared by the Gulf of Mexico Fishery Management Council (Council) under authority of the Magnuson Fishery Conservation and Management Act, as amended (Magnuson Act), and is implemented by regulations appearing at 50 CFR Part 641. The FMP contained a provision for mandatory reporting of catch and landings information necessary for management of the reef fish fishery. However, because the data collection system had not been developed at that time, § 641.5 was reserved. A proposed rule to implement the mandatory reporting requirements was published in the **Federal Register** on October 2, 1985 (50 FR 40206).

The proposed statistical reporting system, designed by NMFS and approved by the Council, makes mandatory the voluntary reporting program for commercial fishermen and dealers that has been utilized since 1956 and initiates a new mandatory program for persons using fish traps. All persons fishing reef fish traps will be required to maintain logbooks providing data on catch, effort, fishing depth and location, and other types of gear fished. Selected commercial dealers and processors will continue to report the weight and value of reef fish handled each month. Provisions for collecting information from charter vessel owners and operators remain reserved pending the outcome of a comparative study of the logbook survey and the Marine Recreational Fisheries Statistical Survey (MRFSS). An information collection requirement in § 641.5(g) for the headboat sector of the fishery was revised and resubmitted to the Office of Management and Budget for approval in February 1987. When OMB approval is received, a notice will be published in the **Federal Register** making this section effective. The resubmission does not alter the data collection elements from those presented in the proposed rule, but merely separates headboats from the charter vessel survey so that approval can be secured for the headboat data collection while the comparative study between charter vessels and the MRFSS continues. Commercial vessels, charter vessels, and headboats will be inventoried by the Center Director or his designee on an annual basis. Background information describing in detail the need for additional data was presented in the proposed rule and is not repeated here.

Comments and Responses

The Texas Parks and Wildlife Department (TPWD) provided the only comments received on the proposed rule. They indicated that the requirements (for commercial fishermen, dealers, and processors) are duplicative of State law and will result in an unnecessary burden on dealers.

The proposed statistical reporting system makes mandatory under Federal law the current voluntary reporting program for commercial fishermen and dealers that has been utilized in the fishery since 1956. Since Texas has a mandatory reporting requirement for wholesale fish dealers which provides the name and address of each dealer, total weight by species, and average price, NMFS does not plan to require duplicative or additional reporting. The intent of the regulation is to make the existing reporting system by State of landing a requirement under Federal law.

The TPWD also indicated that mandatory reporting by fishermen, dealers, and processors will result in double or triple reporting; thereby reducing the value (utility) of the landings data.

The value of landings data for management purposes will not necessarily be reduced if data are collected from different sources. The purposes of collecting data from fishermen, dealers, and processors is not to duplicate the data, but rather to include different kinds of data from these various sources, to collect more timely data on a specific entity, and to provide for verification of data for enforcement purposes. For example, data on fishing effort may be available only from fishermen; data on total weekly or monthly production may be collected more efficiently or quickly from dealers. Texas is party to a State/Federal Cooperative Statistics Agreement with NMFS that provides for the exchange of information between State and Federal agencies. This cooperative program reduces reporting requirements on the public, duplication of State and Federal data collection activities, and overall costs.

These cooperative State/Federal programs are designed to provide complementary data from various sources that meet the timeliness, detail, and enforcement requirements of reef fish management. The result is a comprehensive, consistent, and validated set of data for the managed species throughout their range.

Changes From the Proposed Rule

The final rule differs from the proposed rule for the reasons discussed.

Section 641.2.

Section 641.2 adds a definition for "Charter vessel" and revises the definition for "Headboat" to distinguish between the two types of vessels, which are treated separately in the final rule.

Section 641.5.

A new § 641.5(a) is added to emphasize that data submitted to a State is not also to be submitted to NMFS.

Former paragraph (a) is redesignated (b) and specifies a time limit for fish trap fishermen to submit the required information on each fishing trip.

Former paragraph (b) is redesignated (c) and in subparagraph (c)(1) requires selected commercial vessel owners and operators to report both the name *and* official number of the vessel instead of the name *or* official number. Vessel names, alone, are inadequate for proper vessel identification.

In redesignated paragraphs (b) and (c), the requirements for persons fishing fish traps and for other commercial vessel owners and operators to report the number of fish caught by species are removed. Reports by weight are required. The requirements to report by number were included in the proposed rule in error.

Former paragraphs (c) and (d) are redesignated (d) and (e).

Former paragraph (e) is now divided into paragraphs (f) and (g) to distinguish the charter vessel and headboat components of the fishery. Paragraph (f), "Charter vessel owners and operators", is held in reserve for the reasons discussed earlier. The frequency of reporting information by headboat owners and operators is changed from a monthly submission to a quarterly one, which eases the reporting burden on fishermen yet meets management's need for information on the fishery.

Former paragraphs (f) and (g) are redesignated (h) and (i) and are revised to include headboats. The commercial vessel, charter vessel, and headboat annual inventory report is revised to exclude owners and operators who are selected to report on a monthly basis.

Figures 2 and 3 have been redesignated 3 and 4 to accommodate a new Figure 2, Statistical Grids for Reporting Harvest of Reef Fish. Sections 641.22 and 641.24 have been amended accordingly.

Classification

The Assistant Administrator for Fisheries, NOAA, has previously determined that the FMP, the final portion of which is implemented, in part, by this rule, is consistent with the national standards and other provisions of the Magnuson Act and other applicable law (49 FR 39553, October 9, 1984). He has also determined, based on the supplemental regulatory impact review (SRIR), that this rule is not major under Executive Order 12291.

The General Counsel of the Department of Commerce certified to the Small Business Administration that this rule does not have a significant economic impact on a substantial number of small entities because the rule primarily makes mandatory already existing data collection systems and only limited additional economic impacts will be experienced. The impacts, which will be in the form of burden hours in responding to reporting questions or forms to NMFS statistical agents, are summarized in the SRIR.

This rule contains several collection of information requirements subject to the Paperwork Reduction Act. The collection of this information, except for the items held in reserve and the headboat reporting requirements of § 641.5(g), has been approved by OMB under control numbers 0648–0013 and 0648–0016. When mandatory reporting under the reserved data collection elements is required, additional requests will be submitted to OMB. When the requirements of § 641.5(g) are approved, a notice will be published in the **Federal Register** making this section effective.

The Council determined that this rule does not directly affect the coastal zone of any State with an approved coastal zone management program.

List of Subjects

50 CFR Part 604

Reporting and recordkeeping requirements.

50 CFR Part 641

Fisheries, Fishing, Reporting and recordkeeping requirements.

Dated: September 16, 1987.

James E. Douglas, Jr.,

Deputy Assistant Administrator for Fisheries, National Marine Fisheries Service.

For the reasons set forth in the preamble, 50 CFR Parts 604 and 641 are amended as follows:

PART 604—OMB CONTROL NUMBERS FOR NOAA INFORMATION COLLECTION REQUIREMENTS

1. The authority citation for Part 604 continues to read as follows:

Authority: Paperwork Reduction Act of 1980, 44 U.S.C. 3501–3520 (1982).

2. The table in paragraph (b) of § 604.1 is amended by adding the following entries in numerical order by section number:

§ 604.1 OMB control numbers assigned under the Paperwork Reduction Act.

* * * * *

50 CFR part or section where the information collection requirement is located	Current OMB control number (all numbers begin 0648-)
* * * * *	
§ 641.5(b)	0016
§ 641.5 (c) and (d)	0013
§ 641.5(g)	
§ 641.5(h)	0013
* * * * *	

PART 641—REEF FISH FISHERY OF THE GULF OF MEXICO

3. The authority citation for Part 641 continues to read as follows:

Authority: 16 U.S.C. 1801 *et seq.*

4. In § 641.2, the definition for *Headboat* is revised and new definitions for *Center Director, Charter vessel,* and *Statistical area* are added in alphabetical order to read as follows:

§ 641.2 Definitions.

* * * * *

Center Director means the Director, Southeast Fisheries Center, National Marine Fisheries Service, 75 Virginia Beach Drive, Miami, FL 33149, telephone 305-361-4200, or his designee. The Center Director may designate a State official or agency to collect fishery data.

Charter vessel means any fishing vessel that carries six or fewer passengers that fishes for a fee.

* * * * *

Headboat means any fishing vessel that carries seven or more passengers that fishes for a fee.

* * * * *

Statistical area means one or more of the 21 statistical grids depicted in Figure 2.

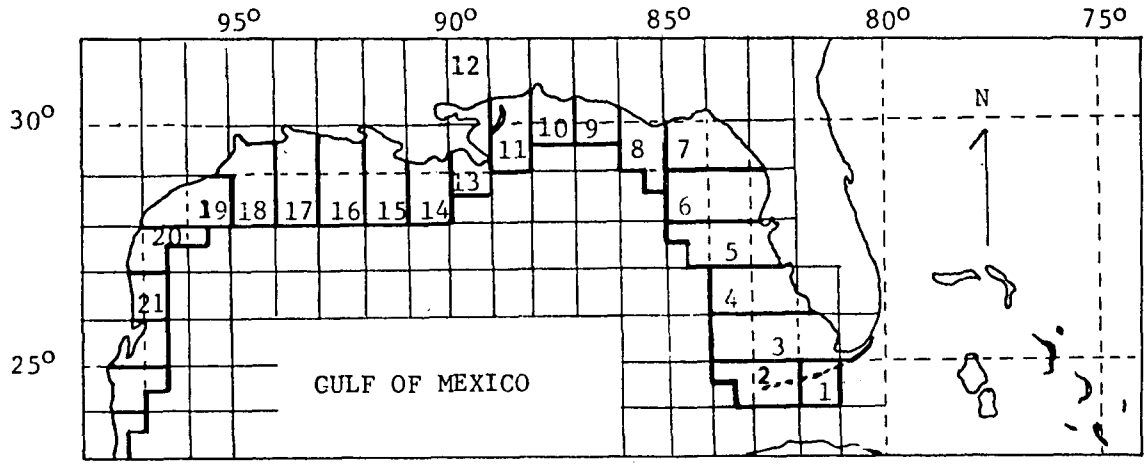

Figure 2. Statistical Grids for Reporting Harvest of Reef Fish.

* * * * *

5. Section 641.5 is amended by revising the heading and adding text to read as follows:

§ 641.5 Reporting requirements.

(a) A person specified in paragraphs (b) through (i) of this section must submit the information required by those paragraphs to the Center Director except for data elements reported to a State agency acting as the Center Director's designee. Failure to comply with the reporting requirements of the State of landing is a Federal violation.

(b) *Persons fishing fish traps.* The owner or operator of a fishing vessel or any other person permitted under § 641.4 who fishes for or lands reef fish in the Gulf of Mexico EEZ or in adjoining State waters, and has used fish traps to harvest such reef fish, must provide the following information regarding all fishing trips to the Center Director or his designee. This information must be submitted within 7 days of completion of each trip:

(1) Permit number as provided for in § 641.4;

(2) Pounds of catch of reef fish by species;

(3) Date of trip, depth fished, and fishing location by statistical area;

(4) Number of trap hauls resulting in the catch;

(5) Duration (days and hours) traps were fished before each haul;

(6) Mesh size of traps;

(7) Other gear fished on trip; and

(8) Total catch in pounds by other gear.

(c) *Commercial vessel owners and operators not fishing fish traps.* Any person who owns or operates a fishing vessel that fishes for or lands any reef fish or parts thereof taken in the Gulf of Mexico EEZ or in adjoining State waters by any gear (other than fish traps) for sale, trade, or barter, and who is selected to report, must provide the following information regarding any fishing trip to the Center Director or his designee, on forms provided:

(1) Name and official number of vessel;

(2) Date(s) of trip and fishing location(s) by statistical area(s);

(3) Pounds of catch of any reef fish by species;

(4) Type and quantity of gear fished,

(5) Duration (days and hours) of vessel fishing effort; and

(6) Duration (hours) gear was fished before each haul.

(d) *Dealers and processors.* Any person who receives reef fish or parts

thereof by way of purchase, barter, trade, or sale from a fishing vessel or person that fishes for, or lands said fish, or parts thereof, from the Gulf of Mexico EEZ or from adjoining State waters, and who is selected to report, must provide the following information to the Center Director or his designee at monthly intervals, or more frequently if requested, on forms provided:

(1) Name and address;

(2) Total poundage of each species received during that month, or other requested interval;

(3) Average monthly price paid for each species by market size; and

(4) Proportion of total poundage landed by each gear type.

(e) *Recreational fishermen interviews.* [Reserved]

(f) *Charter vessel owners and operators.* [Reserved]

(g) *Headboat owners and operators.* Any person who owns or operates a headboat that fishes for or lands reef fish in the Gulf of Mexico EEZ or in adjoining State waters, and who is selected to report, must maintain a fishing record for each trip, or a portion of such trips as specified by the Center Director, on forms provided by the Center Director or his designee and must report the following information at least quarterly. If convenient, individuals can report more frequently.

(1) Name and official number of vessel;

(2) Date(s) and location of each trip and duration of fishing (hours).

(3) Number of fishermen on each trip;

(4) Number of fish caught and approximate weight by species; and

(5) Any other fishery management data requested by the Center Director.

(h) *Commercial vessel, charter vessel and headboat inventory.* Any person described under paragraphs (e), (f), and (g) of this section, and who was not selected to report on a monthly basis, must provide the following information when interviewed annually by the Center Director or his designee:

(1) Name and official number of vessel;

(2) Length and tonnage;

(3) Current home port;

(4) Fishing areas by statistical area;

(5) Ports where fish were landed during the last year;

(6) Type and quantity of gear; and

(7) Number of full- and part-time fishermen or crew members.

(i) Any owner or operator of a commercial or charter vessel or headboat, and any dealer or processor may be required upon request to make reef fish or parts thereof available for inspection by the Center Director or his designee for the collection of additional information or for inspection by an authorized officer.

6. In § 641.7, Paragraphs (a) through (q) are redesignated as (a)(1) through (a)(17); the introductory text to the section is designated as paragraph (a) and revised; in newly redesignated paragraph (a)(14) the reference to "(m)" is removed and "(a)(13)" is added in its place; a new paragraph (a)(18) is added; and paragraph (r) is redesignated as paragraph (b) and revised to read as follows:

§ 641.7 Prohibitions.

(a) It is unlawful for any person to do any of the following:

* * * * *

(18) Falsify or fail to report or provide information required to be submitted or reported or fail to make fish available for inspection, as required by § 641.5.

(b) It is unlawful to violate any other provisions of this part, the Magnuson Act, or any regulation or permit issued under the Magnuson Act.

§ 641.22 [Amended]

7. In § 641.22, the reference to "Figure 2" is removed and "Figure 3" is added in its place.

8. Figure 2 is redesignated as Figure 3.

§ 641.24 [Amended]

9. In § 641.24(b)(4)(iv), the reference to "Figure 3" is removed and "Figure 4" is added in its place.

10. Figure 3 is redesignated as Figure 4.

[FR Doc. 87-21745 Filed 9-22-87; 8:45 am]

BILLING CODE 3510-22-M

---

50 CFR Part 642

[Docket No. 70605-7141]

Coastal Migratory Pelagic Resources of the Gulf of Mexico and South Atlantic

AGENCY: National Marine Fisheries Service (NMFS), NOAA, Commerce.

ACTION: Notice of bag limit reduction.

SUMMARY: The Secretary of Commerce (Secretary) issues this notice to reduce the bag limit to zero for the recreational fishery for Spanish mackerel from the Atlantic migratory group in the Exclusive Economic Zone (EEZ). Based upon current catch statistics, the Acting Regional Director, Southeast Region, NMFS, has determined that the recreational allocation of 0.74 million pounds has been reached. This action is necessary to protect the Spanish mackerel resource and reduce fishing mortality in the EEZ for the remainder of the fishing year.

EFFECTIVE DATE: Closure is effective at 0001 hours local time September 19, 1987, through 2400 hours local time March 31, 1988.

FOR FURTHER INFORMATION CONTACT: Mark F. Godcharles, Southeast Regional Office, National Marine Fisheries Service, 9450 Koger Boulevard, St. Petersburg, FL 33702, 813-893-3722.

SUPPLEMENTARY INFORMATION: The Fishery Management Plan for Coastal Migratory Resources of the Gulf of Mexico and the South Atlantic (FMP) was developed by the Gulf of Mexico and South Atlantic Fishery Management Councils (Councils) under authority of the Magnuson Fishery Conservation and Management Act, and was implemented by regulations appearing at 50 CFR Part 642. Amendment 2 to the FMP which established separate allocations for the Gulf and Atlantic migratory groups of Spanish mackerel, went into effect on June 30, 1987 (52 FR 23836, June 25, 1987).

By notice action, the Councils set the catch limit for the Atlantic migratory group of Spanish mackerel for the current fishing year (April 1, 1987 through March 31, 1988) at 3.1 million pounds; 0.74 million pounds for the recreational sector and 2.36 million pounds for the commercial sector (52 FR 21977 June 10, 1987). The management area for the Atlantic migratory group extends from the Virginia/North Carolina border southward to the Dade/Monroe County, Florida boundary (25°25.4'N. Latitude) to the outer limits of the EEZ.

The management area is further divided into northern and southern areas with bag limits of 10 fish per person per trip for the northern area and four fish per person per trip for the southern area for persons fishing from charterboats and private recreational boats. The dividing line for northern and southern areas extends eastward from the Georgia/Florida boundary (30°42'45.6"N. Latitude).

The Acting Regional Director has determined, based on current catch statistics, that the recreational allocation of the Atlantic migratory group of Spanish mackerel has been reached. The Secretary is required under § 642.22(b) to reduce the bag limit to zero for the recreational fishery for Spanish mackerel when its annual allocation or quota has been taken, by publishing a notice in the **Federal Register**. Hence, the recreational bag limit for Spanish mackerel from the Atlantic migratory group is reduced to zero at 0001 hours local time September 19, 1987. This action will be effective through March 31, 1988, the end of the

current fishing year for the Atlantic migratory group of Spanish mackerel.

Classification

The continued health of stocks of Spanish mackerel could be jeopardized unless this notice takes effect promptly. Therefore, NOAA finds for good cause that prior opportunity for public comment on this notice is contrary to the public interest and its effective date should not be delayed. This action is taken under 50 CFR 642.22, and complies with the procedures of Executive Order 12291.

Authority: 16 U.S.C. 1801 et seq.

List of Subjects in 50 CFR Part 642

Fisheries, Fishing.

Dated: September 18, 1987.

James E. Douglas, Jr.,

Deputy Assistant Administrator For Fisheries, National Marine Fisheries Service.

[FR Doc. 87-21921 Filed 9-18-87; 3:34 pm]

BILLING CODE 3510-22-M

---

50 CFR Part 672

[Docket No. 61220-7033]

Groundfish of the Gulf of Alaska

AGENCY: National Marine Fisheries Service (NMFS), NOAA, Commerce.

ACTION: Modification of notice of closure.

SUMMARY: The Director, Alaska Region, NMFS (Regional Director), has determined that the shares of the sablefish target quotas (TQs) allocated to hook-and-line gear in the Southeast Outside/East Yakutat and West Yakutat Districts in the Eastern Regulatory Area of the Gulf of Alaska have not yet been harvested. The Secretary of Commerce (Secretary), therefore, is modifying the prior closure notices, reference below, by promulgating reopenings and new closure dates for the two districts. This action is necessary to fully harvest the shares of sablefish allocated to hook-and-line gear in these two districts. It is intended as a management response that makes best use of fishery resources in the Gulf of Alaska.

DATES: This notice is effective from 12:00 noon September 21, 1987, Alaska Daylight Time (ADT), until 12:00 noon September 23, 1987 for the Southeast Outside/East Yakutat District and until 12:00 noon September 25, 1987, for the West Yakutat District.

FOR FURTHER INFORMATION CONTACT: Ronald J. Berg, Fishery Management Biologist, NMFS, 907-586-7230.

SUPPLEMENTARY INFORMATION: The hook-and-line fishing season for sablefish in the Southeast Outside/East Yakutat and West Yakutat Districts of the Gulf of Alaska started on April 1, 1987. NMFS closed these districts on April 9 (52 FR 11991, April 14, 1987) and April 15 (52 FR 12916, April 20, 1987), respectively, based on inseason predictions that the TQs had been harvested.

The Alaska Department of Fish and Game (ADF&G) has completed its editing of fish tickets received from the fishery. Upon reviewing the ADF&G results, the Regional Director concluded that 791 mt of sablefish in the Southeast Outside/East Yakutat District and 1,090 mt of sablefish in the West Yakutat District remain unharvested from shares of the TQs allocated to hook-and-line gear in these two respective districts. The North Pacific Fishery Management Council (Council) reviewed the results of the 1987 Gulf of Alaska sablefish hook-and-line fishery during a September 1-2, 1987, meeting. It confirmed its policy that the shares of the sablefish TQs allocated to hook-and-line gear in each district and regulatory area should be fully harvested by that gear type. Therefore, the Council recommended, that the Secretary modify his closure notice for these two districts to allow full harvest of the TQ share allocated to hook-and-line gear.

The Secretary has reviewed the results of the fishery and concurs with the Council's recommendation. Based on estimates of fishing effort expected during the openings and catches per unit of effort, 791 mt will be harvested in two days in the Southeast Outside/East Yakutat District, and 1,090 mt will be harvested in four days in the West Yakutat District. Therefore, under § 672.22(b)(4)(ii), the Secretary is modifying the original closure notices by changing the closure date in the Southeast Outside/East Yakutat District from April 9, 1987 to September 23, 1987, and by changing the closure date in the West Yakutat District from April 15, 1987 to September 25, 1987. This notice will be effective at 12:00 noon (Alaska Daylight Time) on September 21, 1987. Thus, the Southeast/East Yakutat District will be open for forty-eight hours (two days), starting at 12:00 noon, September 21 and closing at 12:00 noon, September 23, 1987. The West Yakutat District will be open for 96 hours (four days), starting at 12:00 noon, September 21 and closing at 12:00 noon, September 25, 1987.

Classification

This action is taken under § 672.22 and is in compliance with Executive Order 12291.

List of Subjects in 50 CFR Part 672

Fisheries, Reporting and recordkeeping requirements.

Dated: September 17, 1987.

James E. Douglas, Jr.

Deputy Assistant Administrator for Fisheries, National Marine Fisheries Service.

[FR Doc. 87-21920 Filed 9-18-87; 3:35 pm]

BILLING CODE 3510-22-M

Proposed Rules

Federal Register
Vol. 52, No. 184
Wednesday, September 23, 1987

This section of the FEDERAL REGISTER contains notices to the public of the proposed issuance of rules and regulations. The purpose of these notices is to give interested persons an opportunity to participate in the rule making prior to the adoption of the final rules.

MERIT SYSTEMS PROTECTION BOARD

5 CFR Parts 1260 and 1261

Freedom of Information Reform Act of 1986; Implementation of Uniform Fee Schedule

AGENCY: Office of the Special Counsel, Merit Systems Protection Board.

ACTION: Proposed rules.

SUMMARY: The Office of the Special Counsel proposes these rules under the authority of sections 1803 and 1804(b)(1) of Pub. L. 99-570, 100 Stat. 5101, 5102, 5103 (October 27, 1986), to implement the fee schedule provisions of the Freedom of Information Reform Act of 1986, consistent with the Uniform Freedom of Information Act Fee Schedule and Guidelines published by the Office of Management and Budget at 52 FR 10012 (March 27, 1987). In addition, the Office of the Special Counsel proposes to amend its Freedom of Information Act and Privacy Act regulations to reflect a zip code change.

DATE: Written comments on these proposed rules may be submitted by any person. Comments received by October 20, 1987 will be considered.

ADDRESS: Comments should be directed to Henry Darnell Lewis, Office of the Special Counsel, Merit Systems Protection Board, 1120 Vermont Avenue NW., Suite 1100, Washington, DC 20005. Comments received will be available for public inspection at the above address between the hours 9:00 a.m. and 4:00 p.m., Monday through Friday, except federal holidays.

FOR FURTHER INFORMATION CONTACT: Henry Darnell Lewis, (202) or FTS 653-8982.

SUPPLEMENTARY INFORMATION:

Executive Order 12291, Federal Regulation

The Special Counsel has determined that these are not major rules as defined in section 1(b) of Executive Order 12291, Federal Regulation.

Regulatory Flexibility Act

I certify under 5 U.S.C. 605(b) that the Office of the Special Counsel is not required to prepare an initial or final regulatory analysis of these regulations pursuant to the Regulatory Flexibility Act, 5 U.S.C. 603-604, because these regulations will not have a significant economic impact on a substantial number of small entities, including small businesses, small organizational units, and small governmental jurisdictions.

List of Subjects

5 CFR Part 1260

Freedom of Information.

5 CFR Part 1261

Privacy Act.

Mary F. Wieseman,
Special Counsel.

It is proposed to amend 5 CFR Parts 1260 and 1261, as follows:

PART 1260—[AMENDED]

1. The authority citation for Part 1260 continues to read as follows:

Authority: 5 U.S.C. 552.

2. Section 1260.1 is revised to read as follows:

§ 1260.1 Public list.

A public list of certain noncriminal whistleblower allegations and Special Counsel findings of violations of law, rule, or regulation, together with reports and certifications by heads of agencies, pursuant to 5 U.S.C. 1206(b)(3) and (c), is available to the public between 8:30 a.m. and 5:00 p.m. weekdays (except legal holidays) in the Office of the Special Counsel, 1120 Vermont Avenue, NW., Washington, DC 20005.

3. Section 1260.4 is revised to read as follows:

§ 1260.4 Service charge for information.

(a) *Categories of requesters.* There are four categories of requesters:

(1) Commercial use requesters. These requesters seek information for themselves or on behalf of someone else for a use or purpose that furthers commercial, trade, or profit interests of the requester or the person on whose behalf the request is made. A requester will not be presumed to be a "commercial use requester" merely by submitting a request on corporate letter head without further explanation of the use to which he plans to put the requested information. Similarly, a request submitted on the letterhead of a nonprofit organization without further explanation will not be presumed to be for a noncommercial purpose. The Office of the Special Counsel will seek clarification from the requester where there is a reasonable doubt as to the intended use of the information.

(2) Educational and noncommercial scientific institution requesters.

(i) An "educational institution" requester is associated with a preschool, a public or private elementary or secondary school, an institution of undergraduate or graduate higher education, or an institution of vocational or professional education, that operates a program or programs of scholarly research, and seeks the information for a scholarly or scientific research goal of the institution, rather than for an individual goal.

(ii) A "noncommercial scientific institution" requester is associated with an institution that is not operated on a "commercial" basis (as that term is defined by paragraph (a)(1) of this section), and which is operated solely for the purpose of conducting scientific research, the results of which are not intended to promote any particular product or industry.

(3) News media requesters. These requesters actively gather news for entities that are organized and operated to publish or broadcast news to the public. Freelance journalists may be news media requesters if they can demonstrate a solid basis for expecting publication through a news organization (such as by producing a publication contract or citing their past publication records), even though not actually employed by it. "News" means information about current events or information that would be of current interest to the public. News media "entities" include, but are not limited to, television or radio stations broadcasting to the public at large, and publishers of periodicals (but only in those instances when they can qualify as disseminators of "news") who make their products available for purchase or subscription by the general public.

(4) All other requesters.

(b) *Free search time and partially free copying.* Educational and noncommercial scientific institution requesters and news media requesters who are requesting records for

noncommercial use are entitled to free search time and free copying for the first 100 pages.

(c) *Partially free search time and partially free copying.* Requesters who are not commercial use requesters, educational or noncommercial scientific institution requesters, or news media requesters are "all other requester", and are entitled to two hours of free search time and free copying for the first 100 pages. Requests from record subjects for records about themselves filed in a system of records will continue to be treated under the fee provisions of the Privacy Act, which permits the assessment of fees only for copying.

(d) *Waiver or reduction of fees.* (1) The Associate Special Counsel for Investigation, the Assistant Special Counsel for Prosecution, the Associate Special Counsel for Prosecution, the Deputy Special Counsel, and the Special Counsel may authorize waiver or reduction of fees that could otherwise be assessed if disclosure of the information requested:

(i) Is in the public interest because it is likely to contribute significantly to public understanding of the operations or activities of the Government, and

(ii) Is not primarily in the commercial interest of the requester.

(2) Satisfaction of paragraph (d)(1)(i) of this section will be determined by all of the following:

(i) Whether the subject of the requested records concerns "the operations or activities of the Government." The requested records concern identifiable operations or activities of the Government, and the connection between the records and the operations or activities is direct and clear, not remote or attenuated;

(ii) Whether disclosure is "likely to contribute" to an understanding of Government operations or activities. An analysis of the substantive content of the releasable portions of the requested records reveals meaningfully informative information on the operations or activities of the Government that is not already in the public domain in duplicative or substantially identical form;

(iii) Whether disclosure will contribute to "public understanding." Considering the identify of the requester and his qualifications to make use of the information, disclosure will contribute to the understanding of the public at large, and not to the individual understanding of the requester or a narrow segment of interested persons; and

(iv) Whether the disclosure is likely to contribute "significantly" to public understanding of Government operations or activities. By an objective standard, the disclosure is likely to enhance the general public's understanding of the subject matter in question more than minimally.

(3) Satisfaction of paragraph (d)(1)(ii) of this section will be determined by both of the following:

(i) Whether the requester has a commercial interest to be furthered by the disclosure. The requester does not seek to further a commercial, trade, or profit interest, as those terms are commonly understood; and

(ii) Whether the magnitude of the identified commercial interest of the requester is sufficiently large, compared to the public interest in disclosure, that disclosure is "a primarily in the commercial interest of the requester." If the requester has a commercial interest, that interest is not greater than the public interest to be served by disclosure of the requested records.

(e) *Fees to be charged.* (1) Requests for records are subject to the following fees:

(i) Commercial use requesters. For search, review, and copying: Photocopies per page, $0.25. Manual record search, $2.50 per quarter hour if conducted by a clerical employee; $5.00 per quarter hour if conducted by a professional or managerial employee. Search fees may be assessed even if the records in question are not located or if the records located are determined to be exempt from disclosure.

(ii) Educational and noncommercial scientific institution requesters, news media requesters. For copying only: Photocopies per page, $0.25, excluding the first 100 pages.

(iii) All other requesters. For search and copying only: Photocopies per page (excluding the first 100 pages), $0.25. Manual record search (excluding the first two hours), $2.50 per quarter hour if conducted by a clerical employee; $5.00 per quarter hour if conducted by a professional or managerial employee.

(2) Method of search.

(i) Any "search", which includes all time spent looking for material that is responsive to a request, will be done in the most efficient and least expensive manner in order to minimize costs for both the agency and the requester.

(ii) For searches made by computer, costs will be assessed when the hourly cost of operating the central processing unit and the operator's hourly salary plus 16 percent equals the equivalent dollar amount of two hours of salary of the person performing the search.

(3) Review charges. Only commercial use requesters will be charged for time spent reviewing records to determine whether they are exempt from mandatory disclosure. These charges will be assessed only for initial review (i.e., the review undertaken when first analyzing the applicability of a specific exemption to a particular record or portion of record), and not for review at the administrative appeal level of an exemption already applied. However, charges will be assessed for a second review of records or portions of records withheld in full under an exemption which is subsequently determined not to apply in order to determine the applicability of other exemptions not previously considered. Review charges shall not include costs incurred in resolving issues of law or policy that may be raised in the course of processing a request.

(4) Copying. A "page" of copying refers to a paper copy of standard size, normally 8½" x 11" or 11" x 14". However, copies may also take the form of microform, audio-visual materials, or machine readable documentation (e.g., magnetic tape or disk), among others.

(5) Nonassessment of fees. No fees will be assessed to any requester, including commercial use requesters, if the cost of routine collection and processing of the fee would be equal to or greater than the fee itself. To make this determination, the Office will consider the administrative costs of receiving and recording a requester's remittance and processing the fee for deposit.

(f) *Other charges.* Complying with requests for special services, such as certification of records as true copies and sending records by special methods (e.g., express mail) is entirely at the discretion of the Office. Since neither the Freedom of Information Act nor its fee structure covers these kinds of services, the Office will assess fees to recover the full costs of providing these services should the Office elect to provide them.

(g) *Aggregating requests.* If the Office of Special Counsel reasonably believes that a requester or a group of requesters acting in concert is filing a series of requests for the purpose of evading the assessment of fees, the Office may aggregate the requests and assess fees accordingly. One element to be considered in determining reasonable belief is the time period within which the requests are filed. Multiple requests of this type filed within a 30 day period may be presumed to have bee made to avoid fees. In no case will the Office aggregate requests on unrelated subjects from one requester.

(h) *Advance notice of fees.* If it is likely that fees will exceed $25, the requester will first be notified of the

estimated amount, unless the requester has indicated in advance his willingness to pay fees as high as those anticipated. The notice will offer the requester the opportunity to confer with personnel of the Office of the Special Counsel with the object of reformulating the request to meet his or her needs at a lower cost.

(i) *Payments.* Payment of fees shall be made by check or money order payable to the United States Treasury.

(j) *Advance payments.* A requester is not required to make an advance payment unless:

(1) The Office estimates or determines that the requester may be required to pay fees in excess of $250, in which case the requester will be notified of the estimated cost. The requester must then furnish satisfactory assurance of full payment if the requester has a history of prompt payment of Freedom of Information Act fees. If the requester has no history of payment, then the requester may be required to furnish an advance payment up to the full estimated cost; or

(2) The requester has previously failed to pay a fee assessed in a timely fashion (i.e. within 30 days of the date of billing), in which case the requester may be required to—

(i) Pay the full amount owed plus any applicable interest as provided in paragraph (l) of this section, or prove payment of the alleged amount in arrears, and

(ii) Make an advance payment of the full amount of the estimated cost before a new or pending request will be processed.

(k) *Effect of nonpayment.* When the Office acts under either paragraph (j)(2)(i) or (j)(2)(ii) of this section, the administrative time limits prescribed in subsection (a)(6) of the Freedom of Information Act will begin only after the fee payments described above have been received.

(l) *Interest charges.* Interest may be charged to any requester who fails to pay fees assessed within 30 days of the date of billing. Interest will be assessed on the 31st day following the day on which the bill for fees was sent, and will be calculated at the rate prescribed in 31 U.S.C. 3717. Receipt of fees, even if not processed, will stay the accrual of interest.

(m) *Collections.* If the Office deems it appropriate in order to encourage repayment of fees assessed in accordance with these regulations, the Office will use the procedures authorized by the Debt Collection Act of 1982 (Pub. L. No. 97-365), including disclosure to consumer reporting agencies and use of collection agencies.

4. Section 1260.5 is revised to read as follows:

§ 1260.5 Appeals.

Any denial, in whole or in part, of a request for records of the Office of the Special Counsel shall advise the requester of his right to appeal the denial to the Special Counsel or his designee. The requester shall submit his appeal in writing within 30 days of the denial. The appeal shall be addressed to the Special Counsel at 1120 Vermont Avenue NW., Washington, DC 20005. Except in unusual circumstances the Special Counsel or his designee shall make a determination on the appeal within 20 working days after it is received. When a request is denied on appeal, the requester shall be advised of his right to seek judicial review.

PART 1261—[AMENDED]

5. The authority citation for Part 1261 continues to read as follows:

Authority: 5 U.S.C. 552a.

6. Paragraph (a) of § 1261.2 is revised to read as follows:

§ 1261.2 Access to records and identification.

(a) Individuals may request access to records pertaining to them that are maintained as described in § 1261.1 by addressing an inquiry to the Office of the Special Counsel either by mail or by appearing in person at the offices of the Special Counsel at 1120 Vermont Avenue NW., Washington, DC 20005, during business hours on a regular business day. Requests in writing should be clearly and prominently marked "Privacy Act Request". Requests for copies of records shall be subject to duplication fees set forth in § 1260.4 of this subchapter.

* * * * *

[FR Doc. 87-21601 Filed 9-22-87; 8:45 am]
BILLING CODE 7400-02-M

FEDERAL DEPOSIT INSURANCE CORPORATION

12 CFR Part 332

Powers Inconsistent With Purposes of Federal Deposit Insurance Law

AGENCY: Federal Deposit Insurance Corporation (FDIC).

ACTION: Extension of deadline for consideration, adoption, and publication of final rule.

SUMMARY: This notice serves to extend the period of time which the FDIC may use under its internal policy statement for the consideration, adoption, and publication of the FDIC's final rule on participation by insured banks in real estate development and insurance underwriting activities.

DATE: The deadline for final agency action on the proposed rule is extended to October 30, 1987.

FOR FURTHER INFORMATION CONTACT: Pamela E.F. LeCren, Senior Attorney, Legal Division, (202) 898-3730, Ken A. Quincy, Chief, Applications Section, Division of Bank Supervision, (202) 898-6753, or Daniel M. Gautsch, Examination Specialist, Planning and Program Development Branch, Division of Bank Supervision, (202) 898-6912, Federal Deposit Insurance Corporation, 550 17th Street NW., Washington, DC 20429.

SUPPLEMENTARY INFORMATION: The FDIC's Statement of Policy on Development and Review of Rules and Regulations (44 FR 31007 (1979)) states that it is the intention of the FDIC formally to withdraw any proposed regulation on which final action by the Board of Directors has not been taken within nine months from the date the regulation was last published for comment. The FDIC published on June 7, 1985, a proposed amendment to Part 332 of FDIC's regulations governing "Powers Inconsistent with the Purposes of Federal Deposit Insurance Law." (50 FR 23964 (June 7, 1985)). The proposed amendment would, among other things, prohibit insured banks, subject to certain exceptions, from directly engaging in real estate development and insurance underwriting activities and establish certain restrictions on the indirect conduct of such activities.

Pursuant to the FDIC's policy, final action on this proposed regulation should have been taken on March 7, 1986, in order to avoid withdrawal of the proposed rule. Inasmuch as FDIC staff was actively reviewing the June 7, 1985, proposal in the spring of 1986 and due to the then-recent appointments of two members of the FDIC's three member Board of Directors, the Board of Directors determined that additional time was necessary for the staff to complete its review and for the Board of Directors to familiarize itself with the subject matter dealt with by the proposal. As withdrawing the proposal and initiating the rulemaking process anew would have caused unnecessary delay, the Board of Directors determined to extend the deadline for final agency action on the proposed regulation to September 8, 1986. (51 FR 7077 (Feb. 28, 1986)). The Board extended the due date a second time to March 15, 1987 (51 FR 32336 (September 11, 1986)) in order for the FDIC and the Board of Governors of

the Federal Reserve System to attempt to coordinate the final action taken in this rulemaking with any final action taken by the Board of Governors in connection with its solicitation of public comment on real estate activities of bank holding companies and their subsidiaries. (*See* 50 FR 4519 (1985) (solicitation of public comments)). Since that time, the Board of Governors, published a proposed rule on the "Permissibility of Real Estate Investment Activities for Bank Holding Companies and Their Direct and Indirect Subsidiaries" with a public comment due date of February 23, 1987. (52 FR 543 (Jan. 7, 1987)). That comment date was subsequently extended to March 25, 1987. (52 FR 4629 (Feb. 13, 1987)). As additional time was required for FDIC staff to study the Federal Reserve Board's proposal, the comments received in response thereto, and the direction taken by the Board of Governors in response to those comments and the efforts at coordinating final action between the two agencies were still continuing, the Board of Directors determined to extend the deadline for final action on the proposed regulation until September 15, 1987. (52 FR 7442 (March 11, 1987)). As staff efforts to coordinate final action had not produced a uniform regulation by September 15, and the Board of Directors continues to be interested in coming to an agreement with the Federal Reserve Board with respect to this issue, the Board of Directors has determined to extend the deadline for final action until October 30, 1987.

By order of the Board of Directors.

Dated at Washington, DC, this 15th day of September, 1987.

Hoyle L. Robinson,

Executive Secretary.

[FR Doc. 87-21948 Filed 9-22-87; 8:45 am]

BILLING CODE 6714-01-M

DEPARTMENT OF TRANSPORTATION

Federal Aviation Administration

14 CFR Part 39

[Docket No. 87-NM-112-AD]

Airworthiness Directives; British Aerospace Model H.S. 748

AGENCY: Federal Aviation Administration (FAA), DOT.

ACTION: Notice of Proposed Rulemaking (NPRM).

SUMMARY: This notice proposes a new airworthiness directive (AD), applicable to certain British Aerospace Model H.S. 748 airplanes, which would require initial and repetitive inspections for fatigue cracks of the hydraulic accumulators and for proper function. This proposal is prompted by reports of hydraulic accumulators cracking in service. This condition, if not corrected, could lead to structural damage to the airplane.

DATES: Comments must be received no later than October 23, 1987.

ADDRESSES: Send comments on the proposal in duplicate to Federal Aviation Administration, Northwest Mountain Region, Office of the Regional Counsel (Attn: ANM-103), Attention: Airworthiness Docket No. 87-NM-112-AD, 17900 Pacific Highway South, C-68966, Seattle, Washington 98618. The applicable service information may be obtained from British Aerospace Group, Weybridge Division Greengate, Middleton, Manchester M24 1SA, England; and Dunlop Limited, Aviation Division, Dunlop House, Ryder Street, St. James', London, SW1Y.6PX, England. This information may be examined at the FAA, Northwest Mountain Region, 17900 Pacific Highway South, Seattle, Washington, or the Seattle Aircraft Certification Office, 9010 East Marginal Way, Seattle, Washington.

FOR FURTHER INFORMATION CONTACT: Mr. Weston Slifer, Systems and Equipment Branch, ANM-130S, telephone (206) 431-1945. Mailing address: Federal Aviation Administration, Northwest Mountain Region, 17900 Pacific Highway South, C-68966, Seattle, Washington 98168.

SUPPLEMENTARY INFORMATION:

Comments Invited

Interested persons are invited to participate in the making of the proposed rule by submitting such written data, views, or arguments as they desire. Communications should identify the regulatory docket number and be submitted in duplicate to the address specified above. All communication received on or before the closing date for comments specified above will be considered by the Administrator before taking action on the proposed rule. The proposals contained in this Notice may be changed in light of the comments received. All comments submitted will be available, both before and after the closing date for comments, in the Rules Docket for examination by interested persons. A report summarizing each FAA/public contact concerned with the substance of this proposal will be filed in the Rules Docket.

Availability of NPRM

Any person may obtain a copy of this Notice of Proposed Rulemaking (NPRM) by submitting a request to the FAA, Northwest Mountain Region, Office of the Regional Counsel (Attn: ANM-103), Attention: Airworthiness Rules Docket No. 87-NM-112-AD, 17900 Pacific Highway South, C-68966, Seattle, Washington 98168.

Discussion

The Civil Aviation Authority (CAA), which is the airworthiness authority of the United Kingdom, has notified the FAA of an unsafe condition which may exist on certain British Aerospace Model H.S. 748 series airplanes.

There have been reports of the hydraulic accumulator failing due to fatigue cracking in several locations of the accumulator body. This condition, if not corrected, could lead to structural damage to the aircraft.

British Aerospace has issued H.S. 748 Service Bulletin No. 29/42, dated February 10, 1986, which describes inspections of the hydraulic accumulators in accordance with Dunlop Service Bulletin 29/175, dated February 4, 1986. The CAA has classified the British Aerospace service bulletin as mandatory.

The British Aerospace service bulletin also introduces maintenance schedule inspections that are necessary to ensure the continued integrity of the accumulator. This maintenance schedule calls for inspections of the hydraulic accumulators at intervals not to exceed 1,000 flight hours or 12 months, whichever occurs first. The inspection consists of a visual examination as well as a check of the system pressure in accordance with the maintenance manual. If, during the system pressure check, the accumulator pressure is less than 200 p.s.i., the accumulator must be inspected in accordance with the Dunlop service bulletin.

The Dunlop service bulletin specifies an initial and repetitive inspection within a certain time period, depending upon previous history. The repetitive inspections occur every 2,500 flight hours or two years, whichever occurs first, after the initial inspection. The inspection involves a non-destructive test (NDT) inspection of the accumulator bodies.

This airplane model is manufactured in the United Kingdom and type certificated in the United States under the provisions of § 21.29 of the Federal Aviation Regulations and the applicable bilateral airworthiness agreement.

Since this condition is likely to exist or develop on airplanes of this same type design registered in the United States, an AD is proposed which would require initial and repetitive inspections, and repair, if necessary, in accordance with the service bulletins previously mentioned.

It is estimated that 2 airplanes of U.S. registry would be affected by this AD, that it would take approximately 1.25 manhours per airplane to accomplish the required actions, and that the average labor cost would be $40 per manhour. Based on these figures, the total cost impact of the AD on U.S. operators is estimated to be $100 a year. This figure applies to the visual and NDT inspections only.

For these reasons, the FAA has determined that this document; (1) involves a proposed regulation which is not major under Executive Order 12291 and (2) is not a significant rule pursuant to the Department of Transportation Regulatory Policies and Procedures (44 FR 11034; February 26, 1979). It is further certified under the criteria of the Regulatory Flexibility Act that this proposed rule, if promulgated, will not have a significant economic impact on a substantial number of small entities because few, if any, Model H.S. 748 airplanes are operated by small entities and because of the minimal cost of compliance per airplane ($50). A copy of a draft regulatory evaluation prepared for this action is contained in the regulatory docket.

List of Subjects in 14 CFR Part 39

Aviation safety, Aircraft.

The Proposed Amendment

Accordingly, pursuant to the authority delegated to me by the Administrator, the Federal Aviation Administration proposes to amend § 39.13 of Part 39 of the Federal Aviation Regulations (14 CFR 39.13) as follows:

PART 39—[AMENDED]

1. The authority citation for Part 39 continues to read as follows:

Authority: 49 U.S.C. 1354(a), 1421, and, 1423; 49 U.S.C. 106(g) (Revised Pub. L. 97-449, January 12, 1983); and 14 CFR 11.89.

§ 39.13 [Amended]

2. By adding the following new airworthiness directive:

British Aerospace (BAe): Applies to all Model H.S. 748 series airplanes, premodification 7205, certificated in any category. Compliance required as indicated, unless previously accomplished.

To prevent structural damage to the aircraft due to fatigue cracking of the hydraulic accumulators, accomplish the following:

A. Within 300 hours time in service after the effective date of this AD, conduct the inspections of the hydraulic brake accumulator, as specified in Paragraph 2.B(1) of BAe H.S. 748 Service Bulletin 29/42, dated February 10, 1986. Any discrepancies detected must be corrected prior to further flight.

B. Within 1,000 hours time in service or one year after the effective date of this AD, whichever occurs first, and thereafter at intervals not to exceed 1,000 hours time in service or one year, whichever occurs first, conduct the inspections of the hydraulic brake accumulator as specified in Paragraph 2.B(2) of BAe H.S. 748 Service Bulletin 29/42, dated February 10, 1986. Any system defects found must be corrected prior to further flight.

C. Within 2,500 hours time in service, or two years after the effective date of this AD, whichever comes first, and thereafter at intervals not to exceed 2,500 hours time in service or two years, whichever occurs first, conduct the inspections of the hydraulic accumulator as specified in Dunlop Service Bulletin 29/175, dated February 4, 1986. Any units that do not meet the limits specified in the service bulletin must be replaced prior to further flight.

D. An alternate means of compliance or adjustment of the compliance time, which provides an acceptable level of safety, may be used when approved by the Manager, Standardization Branch, ANM-113, FAA, Northwest Mountain Region.

E. Special flight permits may be issued in accordance with FAR 21.197 and 21.199 to operate airplanes to a base for the accomplishment of inspections and/or modifications required by this AD.

All persons affected by this directive who have not already received the appropriate service documents from the manufacturer may obtain copies upon request to British Aerospace Group, Weybridge Division Greengate, Middleton, Manchester M24 ISA, England; and Dunlop Limited, Aviation Division, Dunlop House, Ryder Street, St. James's, London SWIY.6PX, England. These documents may be examined at the FAA, Northwest Mountain Region, 17900 Pacific Highway South, Seattle, Washington, or the Seattle Aircraft Certification Office, 9010 East Marginal Way, Seattle, Washington.

Issued in Seattle, Washington, on September 8, 1987.

Frederick M. Isaac,

Acting Director, Northwest Mountain Region.

[FR Doc. 87-21853 Filed 9-22-87; 8:45 am]

BILLING CODE 4910-13-M

14 CFR Part 39

[Docket No. 87-NM-116-AD]

Airworthiness Directives; Short Brothers LTD Model SD3-60 Series Airplanes

AGENCY: Federal Aviation Administration (FAA), DOT.

ACTION: Notice of Proposed Rulemaking (NPRM).

SUMMARY: This notice proposes to amend an existing airworthiness directive (AD), applicable to the Short Brothers Model SD3-60 series airplanes, which currently requires an increase of the threshold temperatures from 4 °C to 10 °C for activation of the ice and rain protection systems. That action was prompted by reports of engine flameouts or uncommanded power reduction occurring in icing conditions. Since then, the manufacturer has determined that the incidents were caused by excessive water in the fuel, due to the configuration of the fuel low pressure (LP) booster pumps in the forward and aft fuel collector tanks. A modification has been developed which will improve the system's ability to continuously purge water from the collector tanks without degradation of engine performance. This action proposes to require installation of the modification and to eliminate the requirement for the higher threshold temperature for activation of the ice and rain protection system.

DATES: Comments must be received no later than October 23, 1987.

ADDRESSES: Send comments on the proposal in duplicate to the Federal Aviation Administration, Northwest Mountain Region, Office of the Regional Counsel (Attention: ANM-103), Attention: Airworthiness Rules Docket No. 87-NM-116-AD, 17900 Pacific Highway South, C-68966, Seattle, Washington 98168.

The applicable service information may be obtained from Short Aircraft, 1725 Jefferson Davis Highway, Suite 510, Arlington, Virginia 22202. This information may be examined at the FAA, Northwest Mountain Region, 17900 Pacific Highway South, Seattle, Washington, or the Seattle Aircraft Certification Office, 9010 East Marginal Way South, Seattle, Washington.

FOR FURTHER INFORMATION CONTACT: Ms. Judy Golder, Standardization Branch, ANM-113; telephone (206) 431-1967. Mailing address: FAA, Northwest Mountain Region, 17900 Pacific Highway South, C-68966, Seattle, Washington 98168.

SUPPLEMENTARY INFORMATION:

Comments Invited

Interested persons are invited to participate in the making of the proposed rule by submitting such written data, views, or arguments as they may desire. Communications should identify the regulatory docket number and be submitted in duplicate to the address specified above. All communications received on or before the closing date for comments specified above will be considered by the Administrator before taking action on the proposed rule. The proposals contained in this Notice may be changed in light of the comments received. All comments submitted will be available, both before and after the closing date for comments, in the Rules Docket for examination by interested persons. A report summarizing each FAA-public contact concerned with the substance of this proposal will be filed in the Rules Docket.

Availability of NPRM

Any person may obtain a copy of this Notice of Proposed Rulemaking (NPRM) by submitting a request to the FAA, Northwest Mountain Region, Office of the Regional Counsel (Attention: ANM-103), Attention: Airworthiness Rules Docket 87-NM-116-AD, 17900 Pacific Highway South, C-68966, Seattle, Washington 98168.

Discussion

On January 29, 1985, Amendment 39-4992, AD 84-24-52, was published in the **Federal Register** (5O FR 3885) to make effective to all persons the requirements of telegraphic AD T84-24-52, issued to all known U.S. operators and owners of Short Brothers Model SD3-60 airplanes on December 7, 1984. The AD requires higher threshold temperatures for the use of ice protection systems due to reports of engine flameout or uncommanded power reductions on the Model SD3-60 airplanes. At that time, the cause of the incidents had not been identified.

The manufacturer has subsequently determined that the incidents were caused by water in the fuel, and has issued Service Bulletin SD360-28-17, dated November 1985, to provide instructions for modification to the fuel LP booster pump in the forward and aft fuel collector tanks. The modification consists of inverting the LP pump in the collector tank, which improves the system s ability to tolerate water ingested in the fuel by continuously purging water from the collector tanks without degradation to engine performance. The service bulletin also provides for daily fuel drain checks until the modifications to the fuel LP boost pumps are accomplished. The United Kingdom Civil Aviation Authority (CAA) has classified this service bulletin as mandatory.

This airplane model is manufactured in the United Kingdom and type certificated in the United States under the provisions of § 21.29 of the Federal Aviation Regulations and the applicable bilateral airworthiness agreement.

Since these conditions are likely to exist or develop on airplanes of this model registered in the United States, an AD is proposed that would require modification of the fuel LP booster pumps in accordance with the service bulletin previously mentioned. Although the service bulletin calls for daily fuel drain checks until the modifications to the fuel LP boost pumps are accomplished, this notice does not propose to require the daily fuel drain check. Service experience indicates the higher threshold temperature for use of the ice protection systems has been a satisfactory action and periodic fuel drain checks are now included in the recommended maintenance program for the airplane.

It is estimated that 55 airplanes of U.S. registry would be affected by this AD, that it would take approximately 21 manhours per airplane to accomplish the required actions, and that the average labor cost would be $40 per manhour. Based on these figures, the total cost impact of this AD to U.S. operators is estimated to be $46,200.

For the reasons discussed above, the FAA has determined that this document (1) involves a proposed regulation which is not major under Executive Order 12291 and (2) is not a significant rule pursuant to the Department of Transportation Regulatory Policies and Procedures (44 FR 11034; February 26, 1979); and it is further certified under the criteria of the Regulatory Flexibility Act that this proposed rule, if promulgated, will not have a significant economic impact on a substantial number of small entities because of the minimal cost of compliance per airplane ($840). A copy of a draft regulatory evaluation prepared for this action is contained in the regulatory docket.

List of Subjects in 14 CFR Part 39

Aviation safety, Aircraft.

The Proposed Amendment

Accordingly, pursuant to the authority delegated to me by the Administrator, the Federal Aviation Administration proposes to amend § 39.13 of Part 39 of the Federal Aviation Regulations as follows:

PART 39—[AMENDED]

1. The authority citation for Part 39 continues to read as follows:

Authority: 49 U.S.C. 1354(a), 1421 and 1423; 49 U.S.C. 106(g) (Revised Pub. L. 97-449, January 12, 1983); and 14 CFR 11.89.

§ 39.13 [Amended]

2. By amending AD 84-24-52, Amendment 39-4992 (50 FR 3885; January 29, 1985), to add a new paragraph C., as follows:

C. Within one year after the effective date of this amendment, modify the fuel low pressure (LP) booster pumps in accordance with Parts B and C of Short Brothers Service Bulletin SD350-28-17, dated November 1985. Accomplishment of these modifications constitute terminating action for the increased temperature threshold required by paragraph A., above.

All persons affected by this directive who have not already received the appropriate service documents from the manufacturer may obtain copies upon request to Short Aircraft, 1725 Jefferson Davis Highway, Arlington, Virginia 22202. These documents may be examined at the FAA, Northwest Mountain Region, 17900 Pacific Highway South, Seattle, Washington, or at the Seattle Aircraft Certification Office, 9010 East Marginal Way South, Seattle, Washington.

Issued in Seattle, Washington, on September 8, 1987.

Frederick M. Isaac,

Acting Director, Northwest Mountain Region.

[FR Doc. 87-21854 Filed 9-22-87; 8:45 am]

BILLING CODE 4910-13-M

---

14 CFR Part 39

[Docket No. 87-CE-27-AD]

Airworthiness Directives; SOCATA Models TB 20 and TB 21 Airplanes

AGENCY: Federal Aviation Administration (FAA), DOT.

ACTION: Notice of Proposed Rulemaking (NPRM).

SUMMARY: This Notice propose to adopt a new Airworthiness Directive (AD), applicable to certain SOCATA Models TB 20 and TB 21 airplanes, which would require inspection of the main landing gear (MGL) hinge ball joints to detect looseness or interference of the MLG hinge strut with the landing gear box stiffener, and subsequent modification of the main landing gear boxes to prevent the landing gear from binding and being unable to extend. This action is the result of FAA evaluation of the manufacturer's service information and

an airworthiness directive issued by the responsible foreign certification airworthiness authority. The proposed actions will preclude a single gear up landing, and resulting damage to the airplane and hazard to the occupants.

DATES: Comments must be received on or before December 22, 1987.

ADDRESSES: SOCATA TB Aircraft Service Bulletin (S/B) No. 30, dated December 1986, applicable to this AD, may be obtained from SOCATA Groupe AEROSPATIALE, B.P. 38, 65001 Tarbes, France; Telephone 62.51.73.00 or 62.93.99.45 (for recorder); or Mr. Bernard H. Veyssiere, Deputy Project Support Manager, U.S., Aerospatiale, 2701 Forum Drive, Grand Prairie, Texas 75053; Telephone (214) 641-3614. This information may be examined at the Rules Docket at the address below. Send comments on the proposal in duplicate to Federal Aviation Administration, Central Region, Office of the Regional Counsel, Attention: Rules Docket No. 87-CE-27-AD, Room 1558, 601 East 12th Street, Kansas City, Missouri 64106. Comments may be inspected at this location between 8 a.m. and 4 p.m., Monday through Friday, holidays excepted.

FOR FURTHER INFORMATION CONTACT: Mr. John P. Dow, Sr., Aerospace Engineer, ACE-109, Aircraft Certification Division, 601 East 12th Street, Kansas City, Missouri 64106a; Telephone (816) 374-6932; or Mr. Roger Anderson, Aerospace Engineer, AEU-100, Aircraft Certification Office, Europe, Africa, and Middle East Office, c/o American Embassy, B-100, Brussels, Belgium; Telephone 513.38.30.

SUPPLEMENTARY INFORMATION:

Comments Invited

Interested persons are invited to participate in the making of the proposed rule by submitting such written data, views or arguments as they may desire. Communications should identify the regulatory docket or notice number and be submitted in duplicate to the address specified above. All communications received on or before the closing date for comments specified above will be considered by the Director before taking action on the proposed rule. The proposals contained in this notice may be changed in the light of comments received. Comments are specifically invited on the overall regulatory, economic, environmental and energy aspects of the proposed rule. All comments submitted will be available both before and after the closing date for comments in the Rules Docket for examination by interested persons. A report summarizing each FAA public contact concerned with the substance of this proposal will be filed in the Rules Docket.

Availability of NPRMs

Any person may obtain a copy of this Notice of Proposed Rulemaking (NPRM) by submitting a request to the Federal Aviation Administration, Central Region, Office of the Regional Counsel, Attention: Rules Docket No. 87-CE-27-AD, Room 1558, 601 East 12th Street, Kansas City, Missouri 64106.

Discussion

The manufacturer, SOCATA Groupe Aerospatiale, has reported the possibility of the landing gear on certain SOCATA Models TB 20 and 21 airplanes being unable to extend due to interference and binding of the mechanism. This condition, if not detected and corrected could result in a gear up landing with damage to the airplane and hazard to the occupants. As a result, SOCATA issued S/B No. 30, dated December 1986, which specifies inspection and modification of the main landing gear boxes. The Director General of Civil Aviation (DGAC), which has responsibility and authority to maintain the continuing airworthiness of these airplanes in France, has classified this Service Bulletin and the actions recommended therein by the manufacturer as mandatory to assure the continued airworthiness of the affected airplanes. On airplanes operated under French registration, this action has the same effect as an AD on airplanes certificated for operation in the United States. The FAA relies upon the certification of DGAC combined with FAA review of pertinent documentation in finding compliance of the design of these airplanes with the applicable United States airworthiness requirements and the airworthiness conformity of products of this type design certificated for operation in the United States. The FAA has examined the available information related to the issuance of S/B No. 30 dated December 1986, and the mandatory classification of this Service Bulletin by the DGAC, and the subsequent issuance of French AD 87-030(A), dated February 18, 1987. Based on the foregoing, the FAA believes that the condition addressed by S/B No. 30 is an unsafe condition that may exist on other products of this type design certificated for operation in the United States. Consequently, the proposed AD would require inspection of the main landing gear hinge ball joints for play and interference between the articulated strut and the main landing gear boxes, and modification of the landing gear as described in SOCATA TB S/B No. 30, dated December 1986.

The FAA has determined there are approximately 120 airplanes affected by the proposed AD. The cost of inspecting and modifying the landing gear and surrounding structure per the proposed AD is estimated to be $80 per airplane. Thge total cost is estimated to be $9,600 to the private sector. The cost of compliance with the proposed AD is so small that the expense of compliance will not be a significant financial impact on any small entities operating these airplanes.

Therefore, I certify that this action (1) is not a "major rule" under the provisions of Executive Order 12291; (2) is not a "significant rule" under DOT Regulatory Policies and Procedures (44 FR 11034; February 26, 1979); and (3) if promulgated, will not have a significant economic impact on a substantial number of small entities under the criteria of the Regulatory Flexibility Act. A copy of the draft regulatory evaluation prepared for this action has been placed in the public docket. A copy of it may be obtained by contacting the Rules Docket at the location provided under the caption "**ADDRESSES**".

List of Subjects in 14 CFR Part 39

Air transportation, Aviation safety, Aircraft, Safety.

The Proposed Amendment

Accordingly, pursuant to the authority delegated to me by the Administrator, the Federal Aviation Administration proposes to amend § 39.13 of Part 39 of the FAR as follows:

PART 39—[AMENDED]

1. The authority citation for Part 39 continues to read as follows:

Authority: 49 U.S.C. 1354(a), 1421 and 1423; 49 U.S.C. 106(g) (Revised, Pub. L. 97-449, January 12, 1983); 14 CFR 11.89.

§ 39.13 [Amended]

2. By adding the following new AD:

Socata: Applies to Models TB 20 and TB 21 (serial numbers 275 through 709) airplanes certificated in any category.

Compliance: Required as indicated after the effective date of this AD, unless already accomplished.

To detect interference between the movable portions of the landing gear structure that may prevent extension of the landing gear, accomplish the following:

(a) Within the next 50 hours time-in-service (TIS) visually and tactilely inspect the main landing gear hinge ball joints for play or interference marks between the articulated strut and the main landing gear box stiffeners as described in SOCATA TB Aircraft Service Bulletin (S/B) No. 30, dated, December 1986.

(1) If detectable play is observed in the hinge ball joints or interference marks are found on the articulated strut or landing gear stiffener box, before further flight modify the airplane as prescribed in SOCATA TB Aircraft S/B No. 30, dated December 1986.

(2) If no looseness or interference is found, within 100 hours TIS after the effective date of this AD, modify the airplane as prescribed in SOCATA TB Aircraft S/B No. 30, dated December 1986.

(b) Airplanes may be flown in accordance with FAR 21.197 to a location where this AD may be accomplished.

(c) An equivalent means of compliance with this AD may be used if approved by the Manager, Brussels Aircraft Certification Office, Europe, Africa, and Middle East Office, c/o American Embassy, B-1000, Brussels, Belgium; Telephone 513.38.30.

All persons affected by this directive may obtain copies of the document(s) referred to herein upon request to SOCATA Groupe AEROSPATIALE, B.P. 38, 65001 Tarbes, France; Telephone 62.51.73.00 or 62.93.99.45 (for recorder); or Mr. Bernard H. Veyssiere, Deputy Product Support Manager, U.S., Aerospatiale, 2701 Forum Drive, Grand Prairie, Texas 75053; Telephone (214) 641-3614; or may examine the documents) referred to herein at FAA, Office of the Regional Counsel, Room 1558, 601 East 12th Street, Kansas, City, Missouri 64106.

Issued in Kanasas City, Missouri, on September 8, 1987.

Jerold M. Chavkin,

Acting Director, Central Region.

[FR Doc. 87-21857 Filed 9-22-87; 8:45 am]

BILLING CODE 4910-13-M

---

14 CFR Part 39

[Docket No. 81-ASW-32]

Airworthiness Directives; Societe Nationale Industrielle Aerospatiale (SNIAS) Models SA 360C and SA 365 Series Helicopters

AGENCY: Federal Aviation Administration (FAA), DOT.

ACTION: Notice of proposed rulemaking (NPRM).

SUMMARY: This notice proposes to amend an existing airworthiness directive (AD) which requires repetitive inspections of the tail rotor hub and fairings of Aerospatiale Models SA 360C and SA 365 series helicopters. Since the AD was issued, service bulletins have been revised to include a 150-hour interval dye penetrant inspection. Also, design changes have been approved that make further AD inspections unnecessary for those helicopters which incorporate the changes. This proposed amendment would add a dye penetrant inspection requirement, identify the approved changes or modifications for earlier aircraft, and omit further mandatory inspections of aircraft which incorporate the changes or modifications.

DATES: Comments must be received on or before October 24, 1987.

ADDRESSES: Comments on the proposal may be mailed in duplicate to: Department of Transportation, Federal Aviation Administration, Office of the Regional Counsel, Fort Worth, Texas 76193-0007, or delivered in duplicate to Room 158, Building 3B, 4400 Blue Mound Road, Fort Worth, Texas.

Comments delivered must be marked: Docket No. 81-ASW-32.

Comments may be inspected at Room 158, Building 3B, between the hours of 8 a.m. and 4:30 p.m. weekdays, except Federal holidays.

The applicable service information may be obtained from Aerospatiale Helicopter Corporation, 2701 Forum Drive, Grand Prairie, Texas 75051, Attention: Customer Support. These documents may be examined at the Office of the Regional Counsel, Federal Aviation Administration, Room 158, Building 3B, 4400 Blue Mound Road, Fort Worth, Texas.

FOR FURTHER INFORMATION CONTACT: John Varoli, Manager, Aircraft Certification Office, FAA, Europe, Africa, and Middle East Office, c/o American Embassy, Brussels, Belgium, APO New York 09667, or James H. Major, Rotorcraft Standards Staff, Department of Transportation, Federal Aviation Administration, Fort Worth, Texas 76193-0111, telephone number (817) 624-5117.

SUPPLEMENTARY INFORMATION: Interested persons are invited to participate in the making of the proposed rule by submitting such written data, views, or arguments as they may desire. Communications should identify the regulatory docket number and be submitted in duplicate to the address specified above. All communications received on or before the closing date for comments will be considered by the Director before taking action on the proposed rule. The proposal contained in this notice may be changed in light of comments.

Comments are specifically invited on the overall regulatory, economic, environmental, and energy aspects of the proposed rule. All comments submitted will be available, both before and after the closing date for comments, in the Rules Docket at the address given above, for examination by interested persons. A report summarizing each FAA-public contact, concerned with the substance of the proposed AD, will be filed in the Rules Docket.

Commenters wishing the FAA to acknowledge receipt of their comments submitted in response to this notice must submit a self-addressed, stamped postcard on which the following statement is made: "Comments to Docket Number 81-ASW-32." The postcard will be date/time stamped and returned to the commenter.

This notice proposes to amend Amendment 39-4190 (46 FR 42254; August 20, 1981), AD 81-14-51, which currently requires daily visual checks and a 50-hour repetitive visual inspection of the tail rotor fairings and hub on Aerospatiale Models SA 360C and SA 365 series helicopters. After the issuance of AD 81-14-51, Aerospatiale Service Bulletin No. 05.03 was issued to include a dye penetrant inspection of the SA 365N tail rotor at intervals of 150 hours' time in service rather than a visual inspection at intervals of 50 hours' time in service. Service Bulletin No. 05.05, Revision 1, was also issued to add additional rotating fairings and a dye penetrant inspection of the tail rotor at intervals of 150 hours' time in service for Models SA 360C and SA 365C series helicopters.

Subsequently, tail rotor design changes have been approved which eliminate the necessity for further AD inspections whenever the tail rotor head with the dual hub body is installed. Models SA 360C and SA 365C Service Bulletin No. 65.17 and Model SA 365N Service Bulletin No. 64.04 concern installation procedures for the tail rotor head with the dual hub body and elimination of further mandatory repetitive inspections. Therefore, this notice proposes to revise AD 81-14-51 to coincide with those service bulletins. The proposed AD applicability statement would refer to the Models SA 360C, SA 365C, and SA 365N helicopters rather than SA 360C and SA 365 series helicopters. Proposed revisions to paragraphs (a) and (b) concerning the 50-hour repetitive inspection would exclude the Model SA 365N helicopters. A proposed new paragraph (h) would be added to require a dye penetrant inspection within 50 hours and thereafter at 150-hour intervals after the effective date of the amendment for the affected aircraft. A proposed new paragraph (i) would be added to identify the service bulletins and approved procedures and modifications for the tail rotor head with the dual hub body and exclude further AD inspections whenever the helicopter incorporates this tail rotor design. Listing the helicopter serial numbers in the AD

applicability statement or in this new paragraph would not be appropriate since the applicability statements in paragraph 1.D of both Service Bulletin Nos. 64.04 and 65.17 are not exclusive.

The FAA has determined that this proposed regulation involves 3 helicopter models of which approximately 25 are registered in the United States, and it adds repetitive inspection but allows use of modifications to relieve further inspections for these models. Therefore, I certify that this action (1) is not a "major rule" under Executive Order 12291, (2) is not a "significant rule" under DOT Regulatory Policies and Procedures (44 FR 11034; February 26, 1979); and (3) if promulgated, would not have a significant economic impact on a substantial number of small entities under the criteria of the Regulatory Flexibility Act. A copy of the draft evaluation prepared for this action is contained in the regulatory docket. A copy of it may be obtained from the Regional Rules Docket.

List of Subjects in 14 CFR Part 39

Air transportation, Aircraft, Aviation safety, Safety.

The Proposed Amendment

Accordingly, pursuant to the authority delegated to me by the Administrator, the Federal Aviation Administration proposes to amend § 39.13 of Part 39 of the FAR as follows:

PART 39—AIRWORTHINESS DIRECTIVES

1. The authority citation for Part 39 continues to read as follows:

Authority: 49 U.S.C. 1354(a), 1421, and 1423; 49 U.S.C. 106(g) (Revised Pub. L. 97-449, January 12, 1983); and 14 CFR 11.89.

§ 39.13 [Amended]

2. By amending Amendment 39-4190 (46 FR 42254; August 20, 1981), AD 81-14-51, as follows:

A. By revising the applicability statement to read as follows:

Societe Nationale Industrielle Aerospatiale (SNIAS): Applies to Models SA 360C, SA 365C, and SA 365N helicopters certificated in any category (Airworthiness Docket No. 81-ASW-32);

B. By revising paragraph (a) by inserting the words "Models SA 360C and SA 365C" between "for" and "helicopters";

C. By revising paragraph (b) by inserting the words "Model SA 360C and SA 365C" between "those" and "helicopters"; and

D. By adding new paragraphs (h) and (i) to read as follows:

* * * * *

(h) Within 50 hours' time in service after the effective date of this amendment and thereafter at intervals not to exceed 150 hours' time in service, inspect for cracks at the mating surfaces of the rotor hub and the external or outer fairing, after removing the fairing from the hub. Use a dye penetrant or equivalent inspection method.

(i) This AD does not apply to Model SA 365N helicopters that comply with Section 2, Accomplishment Instructions, Service Bulletin 64.04, approved November 28, 1985, and to Models SA 360C and SA 365C helicopters that comply with Section 2, Accomplishment Instructions, Service Bulletin 65.17, dated December 17, 1985, which concerns the tail rotor head with dual hub body.

Note: Models SA 365N, S/N 6215 and onward, may have the tail rotor head with dual hub body installed at the factory.

* * * * *

Issued in Fort Worth, Texas, on August 28, 1987.

L.B. Andriesen,

Acting Director, Southwest Region.

[FR Doc. 87-21855 Filed 9-22-87; 8:45 am]

BILLING CODE 4910-13-M

ENVIRONMENTAL PROTECTION AGENCY

21 CFR Part 193

[FAP 7E3495/P428; FRL-3264-7]

Pesticide Tolerances for Methomyl

AGENCY: Environmental Protection Agency.

ACTION: Proposed rule.

SUMMARY: This document proposes that a tolerance be established for residues of the insecticide methomyl in or on the processed commodity dried hops. The proposed regulation to establish a maximum permissible level for residues of the insecticide was requested in a petition submitted by E.I. du Pont de Nemours and Co.

DATE: Comments, identified by the document control number [FAP 7E3495/P428], must be received on or before October 23, 1987.

ADDRESS: By mail, submit written comments to: Information Services Section, Program Management and Support Division (TS-757C), Office of Pesticide Programs, Environmental Protection Agency, 401 M St. SW., Washington, DC 20460.

In person, bring comments to: Rm. 236, CM#2, 1921 Jefferson Davis Highway, Arlington, VA 22202.

Information submitted as a comment concerning this document may be claimed confidential by marking any part or all of that information as "Confidential Business Information" (CBI). Information so marked will not be disclosed except in accordance with procedures set forth in 40 CFR Part 2. A copy of the comment that does not contain CBI must be submitted for inclusion in the public record. Information not marked confidential may be disclosed publicly by EPA without prior notice. All written comments will be available for public inspection in Rm. 236 at the address given above, from 8 a.m. to 4 p.m., Monday through Friday, excluding holidays.

FOR FURTHER INFORMATION CONTACT: By mail: Dennis H. Edwards, Jr., Product Manager (PM) 12, Registration Division (TS-767C), Environmental Protection Agency, 401 M St. SW., Washington, DC 20460.

Office location and telephone number: Rm. 202, CM #2, 1921 Jefferson Davis Highway, Arlington, VA 22202, (703)-557-2386.

SUPPLEMENTARY INFORMATION: E.I. du Pont de Nemours and Co., Wilmington, DE 19898, has submitted food additive petition (FAP) 7E3495 to EPA proposing to amend 21 CFR Part 193 by establishing a tolerance for residues of the insecticide methomyl (*S*-methyl-*N*-[(methylcarbamoyl)oxy]thioacetimidate) in or on the processed commodity dried hops at 7.0 parts per million (ppm). This regulation would expire 26 months after the date of publication of the final rule in the **Federal Register** unless residue data for the use of methomyl on hops are submitted by March 23, 1989. The residue data must be reflective of the actual use of this chemical on hops. A processing study must be submitted which includes analysis of the raw agricultural commodity hops and its processed commodity dried hops.

The data submitted in the petition and other relevant material have been evaluated. The pesticide is considered useful for the purpose for which the tolerance is sought. The toxicological data considered in support of the proposed tolerance include a 2-year rat chronic feeding/oncogenicity study with a no-observed-effect level (NOEL) of 100 ppm; a 2-year mouse chronic feeding/oncogenicity study with a NOEL of 50 ppm (both the rat and mouse studies are negative for oncogenic effects); a 2-year dog feeding study with a NOEL of 100 ppm; a three-generation rat reproduction study with a reproductive NOEL of 100 ppm; a 90-day dog feeding study with a NOEL of 400 ppm; a rat teratology study with no teratogenic potential noted at 400 ppm (highest dose tested); a rabbit teratology study with no teratogenic potential at 16 mg/kg/day (highest dose tested); and a hen neurotoxicity study which was negative for neurotoxic effects at 28 mg/kg.

The acceptable daily intake (ADI) based on the 2-year dog feeding study (NOEL of 2.5 mg/kg/day) and using a 100-fold safety factor, is calculated to be 0.025 mg/kg of body weight (bw)/day. The maximum permitted intake (MPI) for a 60-KG human is calculated to be 1.5 mg/day. The theoretical maximum residue contribution (TMRC) from existing tolerances for a 1.5-kg daily diet is calculated to be 0.0138 mg/day; the current action will increase the TMRC by .000053 mg/day (0.38 percent). Published tolerances utilize 55.34 percent of the ADI; the current action will utilize an additional 0.21 percent.

Methomyl is structurally similar to thiodicarb. Thiodicarb has been shown to have a minor animal metabolite, acetamide, which has been demonstrated to induce cancer in rats. When tolerances were granted for thiodicarb for cottonseed and soybeans, the Agency presented a detailed rationale in the **Federal Register** of July 3, 1985 (50 FR 27452), for issuance of these tolerances under the so-called "Sensitivity of Method" analysis because acetamide residues could be present in milk, meat, or eggs from animals or poultry that had consumed thiodicarb-treated feed, thus possibly implicating the "Delaney clause" in section 409(c)(3) of the Federal Food, Drug, and Cosmetic Act despite the low risk involved. The proposed food additive regulation for methomyl on dried hops does not raise issues under the Delaney clause because there is no reason to believe that the tolerance will result in the presence of acetamide in any human food or animal feed.

A final registration standard and tolerance assessment (FRSTR) on methomyl is scheduled for completion in 1988.

The only sufficient residue data concerns use on hops grown in Germany. These data are insufficient to characterize the levels of methomyl residues that would result from methomyl's use on domestically grown hops. To support such a use, additional residue data are needed on hops grown in the U.S. Until these requirements have been met, the Agency is not in a position to approve applications for registration under the Federal Insecticide, Fungicide, and Rodenticide Act (FIFRA) for methomyl's use on hops grown in the U.S.

The nature of the residues in plants is adequately understood. The residue of concern for the proposed use on hops is the parent compund, methomyl per se, and its oxime metabolit *S*-methyl-*N*-hydroxy thioacetimidate. A metabolism study in animals is currently underway, and the results will be addressed in the final registration standard scheduled for completion in 1988. An adequate analytical method, gas chromatography using a sulfur-sensitive photometric detector, is available for enforcement purposes. The enforcement methodology is available in the Food and Drug Administration (FDA) Pesticide Analytical Manual, Volume II.

Based on the above information, the Agency has concluded that the tolerance would protect the public health and that the use of methomyl on hops would be safe. Therefore, it is proposed that the tolerance be established as set forth below.

Any person who has registered or submitted an application for registration of a pesticide, under the Federal Insecticide, Fungicide, and Rodenticide Act (FIFRA) as amended, which contains any of the ingredients listed herein, may request within 30 days after pubication of this document in the **Federal Register** that this rulemaking proposal be referred to an Advisory Committee in accordance with section 408(e) of the Federal Food, Drug, and Cosmetic Act.

Interested persons are invited to submit written comments on the proposed regulation. Comments must bear a notation indicating the document control number, [FAP 7E3495/P428]. All written comments filed in response to this petition will be available in the Information Services Section at the address given above from 8 a.m. to 4 p.m., Monday through Friday, except legal holidays.

The Office of Management and Budget has exempted this rule from the requirements of section 3 of Executive Order 12291.

Pursuant to the requirements of the Regulatory Flexibility Act (Pub. L. 96-354, 94 Stat. 1164, 5 U.S.C. 601-612), the Administrator has determined that the regulations establishing new tolerances or raising tolerance levels or establishing exemptions from tolerance requirements do not have a significant economic impact on a substantial number of small entities. A certification statement to this effect was published in the **Federal Register** of May 4, 1981 (46 FR 24950).

List of Subjects in 21 CFR Part 193

Administrative practice procedure,
Agricultural commodities,
Pesticides and pests,
Recording and recordkeeping requirements.

Dated: September 8, 1987.

Edwin F. Tinsworth,

Director, Registration Division, Office of Pesticide Programs.

Therefore it is proposed that 21 CFR Part 193 be amended as follows:

PART 193—[AMENDED]

1. The authority citation for Part 193 continues to read as follows:

Authority: 21 U.S.C. 346a.

2. By adding new § 193.475, to read as follows:

§ 193.475 Methomyl; tolerance with expiration date.

A food additive tolerance of 7 parts per million is established until (date 26 months after date of publication of the final rule in the **Federal Register** for residues of the insecticide methomyl (*S*-methyl-*N*[(methylcarbomyl)oxy]thioacetimidate)in or on the processed commodity dried hops as a result of application to the growing hops.

[FR Doc. 87-21722 Filed 9-22-87; 8:45 am]

BILLING CODE 6560-50-M

DEPARTMENT OF LABOR

Occupational Safety and Health Administration

29 CFR Parts 1910, 1915, 1917, and 1918

[Docket No. H-004I]

Occupational Exposure to Lead

AGENCY: Occupational Safety and Health Administration, Labor.

ACTION: Notice of change of dates for informal public hearing and close of comment period; classification of scope of rulemaking.

SUMMARY: On August 3, 1987 (52 FR 28727), the Occupational Safety and Health Administration (OSHA) published a notice inviting public comment and setting the date for an informal public hearing on the feasibility of meeting the permissible exposure limit (PEL) specified in the lead standard (29 CFR 1910.1025(e)(1)) through engineering and work-practice controls in nine specified industry sectors. On August 27, 1987 (52 FR 32312), OSHA published a notice deferring the hearing from September 15, 1987 to September 29, and the close of the written comment period from September 2, 1987 to September 16, 1987. This notice further defers the hearing to November 3, 1987. It also defers the close of the written comment period to October 16, 1987. In

addition, this notice clarifies that all industrial activities characteristic of the nine specified industry sectors are included in the scope of this rulemaking.

DATES: Written comments must be received by October 16, 1987. An informal public hearing will begin November 3, 1987. All notices of intention to appear at the public hearing and all written testimony and documentary evidence to be introduced into the hearing record must be received by October 16, 1987.

ADDRESSES: The hearing will start at 9 a.m., November 3, 1987 in the Auditorium, Frances Perkins Building, Department of Labor, Third and Constitution Avenue NW., Washington, DC. On subsequent days the hearing also will begin at 9 a.m. in the Auditorium of the Frances Perkins Building.

Comments, in quadruplicate, should be mailed or delivered to the Docket Office, Occupational Safety and Health Administration, Docket No. H-004I, Room N-3670, U.S. Department of Labor, 200 Constitution Avenue NW., Washington, DC 20210. Telephone: (202) 523-7894.

Notices of Intention to Appear, in quadruplicate, should be mailed to Mr. Tom Hall, OSHA Division of Consumer Affairs, Room N-3647, U.S. Department of Labor, 200 Constitution Avenue NW., Washington, DC 20210. Telephone: (202) 523-8615.

All materials submitted will be available for public inspection and copying at the above address.

FOR FURTHER INFORMATION CONTACT: James F. Foster, Director, Office of Information and Consumer Affairs, Occupational Safety and Health Administration, Room N-3641, U.S. Department of Labor, 200 Constitution Avenue NW., Washington, DC 20210. Telephone: (202) 523-8151.

SUPPLEMENTARY INFORMATION: On August 3, 1987 (52 FR 28727), the Occupational Safety and Health Administration (OSHA) gave notice of a limited reopening of the rulemaking record for the OSHA lead standard to receive specific information relating to the feasibility of meeting the permissible exposure limit (PEL) of the lead standard (29 CFR 1910.1025(e)(1)) through engineering and work practice controls in the following nine industry sectors: Lead chromate pigments (SIC 2816), lead chemicals (SIC 2816/2819), nonferrous foundries (SIC 3362/3369), brass and bronze ingot production (SIC 3341/3362), secondary copper smelting (SIC 3341), battery breaking, when not part of secondary lead smelting (SIC 5093), leaded steel (SIC 3312/3313), shipbuilding and ship repair (SIC 3731) and stevedoring (SIC 4463). The August 3, 1987 notice set September 15, 1987 as the date to begin an informal public hearing on this issue and September 2, 1987 as the deadline for receipt of written comments and notices of intention to appear at the hearing.

OSHA's action was taken in accordance with a March 31, 1987 order by the U.S. Court of Appeals for the District of Columbia Circuit, granting the Agency's earlier request that the record be remanded to OSHA for further administrative proceedings to determine the feasibility of implementing paragraph (e)(1) of the lead standard in the nine industry sectors listed above. In that order, the court mandated that OSHA return the record to the court on or before October 1, 1987.

One June 17, 1987, OSHA filed with the court a motion requesting a 90-day extension of time, from October 1, 1987 to January 1, 1988, in which to return to the court the record of the nine remand industry sectors. That motion was granted by the court on July 31, 1987.

On August 18, 1987, OSHA received a request from the Oxide and Chemicals Committee of the Lead Industries Association, the main trade association for the lead industries, that the public hearing and deadline for receipt of written comments be deferred for at least 30 days, or in the alternative, that the deadline for receipt of written comments be extended beyond September 2, 1987.

In light of the July 31, 1987 court order granting OSHA additional time to make feasibility determinations concerning the nine industry sectors and to return the record to the court, OSHA decided to defer the public hearing and the deadline for receipt of written comments for two weeks (52 FR 32312; August 27, 1987).

Thereafter, on September 8, 1987, the American Cast Metals Association (ACMA) requested a further deferral of the hearing. According to ACMA, the additional time was needed because some important information upon which OSHA's contractor, Meridian Research, Inc., based its feasibility report was not available in the public docket soon enough for ACMA to evaluate it and to submit meaningful comments by the deadline. ACMA sought a further deferral of the hearing and the close of comments for approximately one or two months. ACMA's request for additional time was immediately supported by similar requests from the American Foundrymen's Society, the Association of Brass and Bronze Ingot Manufacturers, the American Iron and Steel Institute, and the Plumbing Manufacturers Institute.

Although OSHA remains under a court order to complete its feasibility determinations and to report its findings to the court by January 1, 1988, OSHA agrees that some further deferral of the hearing is justified in order to assure full and meaningful participation. Consequently, the public hearing is now scheduled to begin at 9 a.m., Tuesday, November 3, 1987 in the Auditorium of the Frances Perkins Building, U.S. Department of Labor. On subsequent days the hearing will be held at the same time and place. Written comments and notices of intention to appear at the hearing must be received by October 16, 1987. All other aspects of the rulemaking remain as indicated in OSHA's notice of August 3, 1987.

The scope of this rulemaking is defined by the nine designated industry sectors included in the March 31, 1987 court order remanding the record to OSHA for feasibility determinations. The SIC (Standard Industrial Classification) codes cited in the August 3, 1987 **Federal Register** notice (52 FR 28727) and thereafter for the nine industries are provided exclusively for general reference. The code(s) cited in connection with each industry sector may be broader (e.g., SIC 3341 includes not only secondary copper smelting but secondary lead smelting as well) or narrower (e.g., SIC 3362 and 3369 do not cover all nonferrous foundaries) than the scope of the industry sector for the purpose of this rulemaking. Thus, for example, the nonferrous foundries operated by manufacturers of plumbing products are within the scope of the nonferrous foundry industry and therefore with the scope of this rulemaking regardless of whether the manufacturers report under the cited SIC codes. It is the type of industrial activity performed at the establishment, not the employer's SIC code, that determines whether the establishment is covered by this rulemaking.

Authority: This document was prepared under the direction of John A. Pendergrass, Assistance Secretary of Labor for Occupational Safety and Health Administration, 200 Constitution Avenue NW., Washington, DC 20210. It is issued pursuant to section 6(b) of the Occupational Safety and Health Act of 1970 (84 Stat. 1593; 29 U.S.C. 655), and section 41 of the Longshore and Harbor Workers' Compensation Act (33 U.S.C 941).

Signed at Washington, DC, this 17th day of September 1987.

John A. Pendergrass,

Assistance Secretary of Labor

[FR Doc. 87-21981 Filed 9-22-87; 8:45 am]

BILLING CODE 4510-26-M

DEPARTMENT OF THE INTERIOR

Office of Surface Mining Reclamation and Enforcement

30 CFR Part 914

Indiana; Proposed Regulatory Program Amendment; Coal Preparation Plants

AGENCY: Office of Surface Mining Reclamation and Enforcement (OSMRE), Interior.

ACTION: Proposed rule.

SUMMARY: OSMRE is announcing receipt of a proposed amendment package submitted by Indiana as a modification to the State's permanent regulatory program (hereinafter referred to as the Indiana program) under the Surface Mining Control and Reclamation Act of 1977 (SMCRA).

The amendments submitted consist of proposed changes to the Indiana Surface Mining Rules provisions to revise the sections pertaining to coal preparation plants so that they are no less effective than the Federal rules.

This notice sets forth the times and location that the Indiana program proposed amendments will be available for public inspection, the comment period during which interested persons may submit written comments on the proposed amendments, and the procedures that will be followed for the public hearing, if one is requested.

DATES: Written comments must be received on or before 4:00 p.m. on October 23, 1987; if requested, a public hearing on the proposed amendments is scheduled for 1:00 p.m. on October 19, 1987; and requests to present oral testimony at the hearing must be received on or before 4:00 p.m. October 8, 1987.

ADDRESSES: Written comments and requests to testify at the hearing should be directed to Mr. Richard D. Rieke, Director, Indianapolis Field Office, Office of Surface Mining Reclamation and Enforcement, Minton-Capehart Federal Building, 575 North Pennsylvania Street, Room 301, Indianapolis, Indiana 46204; Telephone: (317) 269-2609. If a hearing is requested, it will be held at the same address.

Copies of the Indiana program, the amendments, a listing of any scheduled public meeting, and all written comments received in response to this notice will be available for public review at the following locations, during normal business hours Monday through Friday, excluding holidays:

Office of Surface Mining Reclamation and Enforcement, Room 5315A, 1100 "L" Street NW., Washington, DC 20240.

Office of Surface Mining Reclamation and Enforcement, Eastern Field Operations, Ten Parkway Center, Pittsburgh, PA 15220.

Office of Surface Mining Reclamation and Enforcement, Indianapolis Field Office, Minton-Capehart Federal Building, 575 North Pennsylvania Street, Room 301, Indianapolis, IN 46204.

Indiana Department of Natural Resources, 608 State Office Building, Indianapolis, IN 46204.

Each requester may receive, free of charge, one single copy of the proposed amendment by contacting the OSMRE Indianapolis Field Office.

FOR FURTHER INFORMATION CONTACT: Mr. Richard D. Rieke, Director, (317) 269-2609; (FTS) 331-2609.

SUPPLEMENTARY INFORMATION:

I. Background on the Indiana Program

On July 29, 1982, the Indiana program was made effective by the conditional approval of the Secretary of Interior.

Information pertinent to the general background, revisions, modifications, and amendments to the Indiana program submission, as well as the Secretary's findings, the disposition of comments, and a detailed explanation of the conditions of approval of the Indiana program can be found in the July 26, 1982 **Federal Register** (47 FR 32107). Subsequent actions concerning the conditions of approval and program amendments are identified at 30 CFR 914.10, 914.15, and 914.16.

II. Discussion of the Proposed Amendments

By letter dated August 13, 1987 (Administrative Record No. IND-0502), the Indiana Department of Natural Resources (IDNR) submitted proposed amendments to the Indiana program at Indiana Administrative Code (IAC) 310 IAC 12-1-3; 310 IAC 12-3-104; 310 IAC 12-3-104.1; 310 IAC 12-5-155; and 310 IAC 12-5-156. The proposed changes are briefly summarized below:

Amendment to 310 IAC Section 12-1-3 provides for: insertion and definition of the term "Coal preparation"; changing "Coal processing plant" to "Coal preparation plant" and modifying its definition; modifying the definition of "Surface coal mining operations"; an less significant typographical and style changes to other definitions.

Amendment to 310 IAC 12-3-104 modifies the rule so that it applies to coal preparation plants.

Amendment to 310 IAC 12-3-104.1 adds the requirement that existing coal preparation plants located outside the permit area of a specific mine shall not operate for more than 240 days beyond the effective date of the rule unless the operator applies for a permit within 60 days of the effective date of the rule.

Amendment to 310 IAC 12-5-155 changes "coal processing" to "coal preparation" and makes less significant style changes to the rule.

Amendment to 310 IAC 12-5-156 changes "coal processing" to "coal preparation"; deletes the signs and markers requirement reference to "coal processing waste disposal area and water treatment facilities"; adds references to other rules; and makes less significant style changes to the rule.

The full text of the proposed program amendments submitted by Indiana is available for public inspection at the addresses listed above. The Director now seeks public comment on whether the proposed amendments are no less effective that the Federal regulations. If approved, the amendments will become part of the Indiana program.

III. Public Comment Procedures

In accordance with the provisions of 30 CFR 732.17, OSMRE is now seeking comment on whether the amendments proposed by IDNR satisfy the requirements of 30 CFR 732.15 for the approval of State program amendments. If the amendments are deemed adequate, they will become part of the Indiana program.

Written Comments

Written comments should be specific, pertain only to the issues proposed in this rulemaking, and include explanations in support of the commenter's recommendations. Comments received after the time indicated under "**DATES**" or at locations other than the Indianapolis Field Office will not necessarily be considered in the final rulemaking or included in the Administrative Record.

Public Hearing

Persons wishing to comment at the public hearing should contact the person listed under "**FOR FURTHER INFORMATION CONTACT**" by the close of business on October 8, 1987. If no one requests an opportunity to comment at a public hearing, the hearing will not be held.

Filing of a written statement at the time of the hearing is requested as it will greatly assist the transcriber.

Submission of written statements in advance of the hearing will allow OSMRE officials to prepare adequate responses and appropriate questions.

The public hearing will continue on the specified date until all persons scheduled to comment have been heard. Persons in the audience who have not been scheduled to comment and who wish to do so will be heard following those scheduled. The hearing will end after all persons scheduled to comment and persons present in the audience who wish to comment have been heard.

If only one person requests an opportunity to comment at a hearing, a public meeting, rather than a public hearing, may be held. A summary of the meeting will be included in the Administrative Record.

Public Meeting

Persons wishing to meet with OSMRE representatives to discuss the proposed amendment may request a meeting at the Indianapolis Field Office by contacting the person listed under "**FOR FURTHER INFORMATION CONTACT.**" All such meetings will be open to the public and, if possible, notices of meetings will be posted in advance in the Administrative Record.

IV. Procedural Determinations

1. *Compliance with the National Environmental Policy Act.* The Secretary has determined that, pursuant to section 702(d) of SMCRA, 30 U.S.C., 1292(d), no environmental impact statement need be prepared on this rulemaking.

2. *Executive Order No. 12291 and the Regulatory Flexibility Act.* On August 28, 1981, the Office of Management and Budget (OMB) granted OSMRE an exemption from sections 3, 4, 7, and 8 of Executive Order 12291 for actions directly related to approval or conditional approval of State regulatory programs. Therefore, for this action OSMRE is exempt from requirement to prepare a Regulatory Impact Analysis, and regulatory review by OMB is not required.

The Department of the Interior has determined that this rule would not have a significant economic effect on a substantial number of small entities under the Regulatory Flexibility Act (5 U.S.C. 601 et seq.). This rule would not impose any new requirements; rather, it would ensure that existing requirements established by SMCRA and the Federal rules would be met by the State.

3. *Paperwork Reduction Act.* This rule does not contain information collection requirements which require approval by OMB under 44 U.S.C. 3507.

List of Subjects in 30 CFR Part 914

Coal mining, Intergovernmental relations, Surface mining, Underground mining.

Date: September 14, 1987.

Carl C. Close,

Assistant Director, Eastern Field Operations.

[FR Doc. 87-21922 Filed 9-22-87; 8:45 am]

BILLING CODE 4310-05-M

---

30 CFR Part 914

Indiana; Proposed Regulatory Program Amendment

AGENCY: Office of Surface Mining Reclamation and Enforcement (OSMRE), Interior.

ACTION: Proposed rule.

SUMMARY: OSMRE is announcing receipt of a proposed amendment package submitted by Indiana as a modification to the State's permanent regulatory program (hereinafter referred to as the Indiana program) under the Surface Mining Control and Reclamation Act of 1977 (SMCRA).

The amendments submitted consist of proposed changes to the Indiana Surface Mining Law provisions to require: (1) That the surety of a mine operator be recognized by the Treasurer of State as holding a certificate of authority from the United States Department of the Treasury as an acceptable surety on Federal bonds; (2) copies of records, reports, inspection materials, or other information obtained pursuant to the Division's inspection and enforcement responsibilities under Indiana Code 13-4.1-11 be made available to the public at a public library in the county in which the mining operation is located rather than at the county recorder's office; and (3) notices of violation are effective when served upon the permittee.

This notice sets forth the times and location that the Indiana program proposed amendments will be available for public inspection, the comment period during which interested persons may submit written comments on the proposed amendments, and the procedures that will be followed for the public hearing, if one is requested.

DATES: Written comments must be received on or before 4:00 p.m. on October 23, 1987; if requested, a public hearing on the proposed amendments is scheduled for 1:00 p.m. on October 19, 1987; and requests to present oral testimony at the hearing must be received on or before 4:00 p.m. October 8, 1987.

ADDRESSES: Written comments and requests to testify at the hearing should be directed to Mr. Richard D. Rieke, Director, Indianapolis Field Office, Office of Surface Mining Reclamation and Enforcement, Minton-Capthart Federal Building, 575 North Pennsylvania Street, Room 301, Indianapolis, Indiana 46204; Telephone: (317) 269-2609. If a hearing is requested, it will be held at the same address.

Copies of the Indiana program, the amendments, a listing of any scheduled public meeting, and all written comments received in response to this notice will be available for public review at the following locations, during normal business hours Monday through Friday, excluding holidays:

Office of Surface Mining Reclamation and Enforcement, Room 5131 1100 "L" Street, NW., Washington, DC 20240.

Office of Surface Mining Reclamation and Enforcement, Eastern Field Operations, Ten Parkway Center, Pittsburgh, PA 15220.

Office of Surface Mining Reclamation and Enforcement, Indianapolis Field Office, Minton-Capehart Federal Building, 575 North Pennsylvania Street, Room 301, Indianapolis, IN 46204.

Indiana Department of Natural Resources, 608 State Office Building, Indianapolis, IN 46204.

Each requester may receive, free of charge, one single copy of the proposed amendment by contacting the OSMRE Indianapolis Field Office.

FOR FURTHER INFORMATION CONTACT: Mr. Richard D. Rieke, Director, (317) 269-2609; (FTS) 331-2609.

SUPPLEMENTARY INFORMATION:

I. Background on the Indiana Program

On July 29, 1982, the Indiana program was made effective by the conditional approval of the Secretary of Interior. Information pertinent to the general background, revisions, modifications, and amendments to the Indiana program submission, as well as the Secretary's findings, the disposition of comments, and a detailed explanation of the conditions of approval of the Indiana program can be found in the July 26, 1982 **Federal Register** (47 FR 32107). Subsequent actions concerning the conditions of approval and program amendments are identified at 30 CFR 914.10, 914.15, and 914.16.

II. Discussion of the Proposed Amendments

By letter dated August 13, 1987 (Administrative Record No. IND-0501), the Indiana Department of Natural Resources (IDNR) submitted proposed amendments to the Indiana program at Indiana Code (IC) 13-4.1-6-4; 13-4.1-11-

3; and 13-4.1-11-4. The proposed changes are briefly summarized below:

Amendment to Indiana Code Section 13-4.1-6-4 requires that the surety of a mine operator be recognized by the Treasurer of State as holding a certificate of authority from the United States Department of the Treasury as an acceptable surety on Federal Bonds.

Amendment to Indiana Code Section 13-4.1-11-3 requires copies of any record, report, inspection material or other information obtained pursuant to the Division's inspection and enforcement responsibilities under Indiana Code 13-4.1-11 be made available at a public library in the county in which the mining operation is located rather than at the county recorder's office.

Amendment to Indiana Code Section 13-4.1-11-4 requires that notices of violation are effective when served upon the permittee, subject to an application for temporary relief.

The full text of the proposed program amendments submitted by Indiana is available for public inspection at the addresses listed above. The Director now seeks public comment on whether the proposed amendments are no less effective than the Federal regulations. If approved, the amendments will become part of the Indiana program.

III. Public Comment Procedures

In accordance with the provisions of 30 CFR 732.17 OSMRE is now seeking comment on whether the amendments proposed by IDNR satisfy the requirements of 30 CFR 732.15 for the approval of State program amendments. If the amendments are deemed adequate, they will become part of the Indiana program.

Written Comments

Written comments should be specific, pertain only to the issues proposed in this rulemaking, and include explanations in support of the commenter's recommendations. Comments received after the time indicated under "**DATES**" or at locations other than the Indianapolis Field Office will not necessarily be considered in the final rulemaking or included in the Administrative Record.

Public Hearing

Persons wishing to comment at the public hearing should contact the person listed under "**FOR FURTHER INFORMATION CONTACT**" by the close of business on October 8, 1987. If no one requests an opportunity to comment as a public hearing, the hearing will not be held.

Filing of a written statement at the time of the hearing is requested as it will greatly assist the transcriber. Submission of written statements in advance of the hearing will allow OSMRE officials to prepare adequate responses and appropriate questions.

The public hearing will continue on the specified date until all persons scheduled to comment have been heard. Persons in the audience who have not been scheduled to comment and who wish to do so will be heard following those scheduled. The hearing will end after all persons scheduled to comment and persons present in the audience who wish to comment have been heard.

If only one person requests an opportunity to comment at a hearing, a public meeting, rather than a public hearing, may be held. A summary of the meeting will be included in the Administrative Record.

Public Meeting

Persons wishing to meet with OSMRE representatives to discuss the proposed amendment may request a meeting at the Indianapolis Field Office by contacting the person listed under "**FOR FURTHER INFORMATION CONTACT.**" All such meetings will be open to the public and, if possible, notices of meetings will be posted in advance of the Administrative Record.

IV. Procedural Determinations

1. *Compliance with the National Environmental Policy Act.* The Secretary has determined that, pursuant to section 702(d) of SMCRA, 30 U.S.C., 1292(d), no environmental impact statement need be prepared on this rulemaking.

2. *Executive Order No. 12291 and the Regulatory Flexibility Act.* On August 28, 1981, the Office of Management and Budget (OMB) granted OSMRE and exemption from sections 3, 4, 7, and 8 of Executive Order 12291 for actions directly related to approval or conditional approval of State regulatory programs. Therefore, for this action OSMRE is exempt from requirement to prepare a Regulatory Impact Analysis, and regulatory review by OMB is not required.

The Department of the Interior has determined that this rule would not have a significant economic effect on a substantial number of small entities under the Regulatory Flexibility Act (5 U.S.C. 601 et seq.). This rule would not impose any new requirements established by SMCRA and the Federal rules would be met by the State.

3. *Paperwork Reduction Act.* This rule does not contain information collection requirements which require approval by OMB under 44 U.S.C. 3507.

List of Subjects in 30 CFR Part 914

Coal mining, Intergovernmental relations, Surface mining, Underground mining.

Date: September 4, 1987.

Carl C. Close,

Assistant Director, Eastern Field Operations.

[FR Doc. 87-21923 Filed 9-22-87; 8:45 am]

BILLING CODE 4310-05-M

---

30 CFR Part 934

Reopening of Public Comment Period; Proposed Amendment VII; North Dakota Permanent Regulatory Program

AGENCY: Office of Surface Mining Reclamation and Enforcement (OSMRE), Interior.

ACTION: Reopening of public comment period.

SUMMARY: OSMRE is reopening the period for review and public comment on an amendment submitted by the State of North Dakota to modify its permanent regulatory program. On April 14, 1987 (52 FR 12002), OSMRE announced a public comment period and procedures for requesting a public hearing on the proposed amendment to the North Dakota permanent program which was approved by the Secretary of the Interior under the Surface Mining Control and Reclamation Act of 1977 (SMCRA). The proposed amendment consisted of modifications to North Dakota Administrative Code (NDAC) Article 69-05.2 on performance bonds and liability insurance, postmining land use, and signs and markers.

OSMRE is reopening the comment period to allow the public an opportunity to comment on additional material relating to the proposed amendment submitted August 24, 1987 by North Dakota in response to an issue letter from OSMRE July 27, 1987.

This notice sets forth the times and locations that the proposed amendment as modified is available for public inspection, the comment period during which interested perions may submit written comments on the proposed amendment and information pertinent to the public hearing.

DATES: Written comments, data or other relevant information not received on or before 4:00 p.m. on October 8, 1987 will not necessarily be considered.

ADDRESSES: Written comments should be mailed or hand-delivered to Mr. Jerry R. Ennis, Director, Office of Surface Mining Reclamation and Enforcement, Casper Field Office, Federal Building,

100 East "B" Street, Room 2128, Casper, Wyoming 82601-1918.

The public hearing, if requested, will be held at the North Dakota Capitol Building, Bismarck, North Dakota 58505.

FOR FURTHER INFORMATION CONTACT: Mr. Jerry R. Ennis, Director, Office of Surface Mining Reclamation and Enforcement, Casper Field Office, Federal Building, 100 East "B" Street, Room 2128, Casper, Wyoming 82601-1918; Telephone: (307) 261-5776. Copies of the North Dakota program amendment, the North Dakota program, and the administrative record on the North Dakota program are available for public review and copying at the OSMRE offices and the office of the State regulatory authority listed below, Monday through Friday, 9:00 a.m. to 4:00 p.m., excluding holidays.

Office of Surface Mining Reclamation and Enforcement, Administrative Record, 1100 L Street NW., Room 5124, Washington, DC 20240

Office of Surface Mining Reclamation and Enforcement, 100 East "B" Street, Room 2128, Casper, Wyoming 82601-1918.

North Dakota Public Service Commission, Reclamation Division, Capitol Building, Dismarck, North Dakota 58505.

SUPPLEMENTARY INFORMATION:

I. Background

Information concerning the general background on the permanent program, general background on the State program approval process, general background on the North Dakota program submission, Secretary's findings, disposition of public comments and Secretary's decision of conditional approval can be found in the December 15, 1980 **Federal Register** (45 FR 82214). Subsequent actions concerning the conditions of approval and program amendments are identified at 30 CFR 934.12 and 934.15.

II. Proposed Amendment

On February 17, 1987, the State of North Dakota submitted to OSMRE an amendment to its approved permanent regulatory program. The amendment consisted of revisions to the approved North Dakota regulations. The amended section of the regulations and brief description of the amended subject area is as follows: Section 69-05.2-12 performance bonds—liability insurance; section 69-05.2-13-04 performance standards—general requirements—signs and markers; and section 69-05.2-23 performance standards—postmining land use.

OSMRE is seeking comment on whether North Dakota's proposed revisions to its regulations are in accordance with SMCRA and no less effective than the requirements of the revised Federal regulations and satisfy the criteria for approval of State program amendments at 30 CFR 732.15 and 732.17.

The full text of the proposed program and modifications submitted by North Dakota for OSMRE's consideration are available for public review at the addresses listed.

During review of this amendment, OSMRE identified several concerns. OSMRE notified North Dakota of these concerns by letter dated July 27, 1987.

By letter received August 24, 1987 North Dakota outlined its proposed remedies to meet OSMRE's concerns. The full text of this letter is available for review at the locations listed above under "**ADDRESSES.**" OSMRE is now seeking comment on the August 24, 1987 response from North Dakota.

List of Subjects in 30 CFR Part 934

Coal mining, Intergovernmental relations, Surface mining, Underground mining.

Date: September 11, 1987.

Raymond L. Lowrie,

Assistant Director, Western Field Operations, Office of Surface Mining Reclamation and Enforcement.

[FR Doc. 87-21924 Filed 9-22-87; 8:45 am]

BILLING CODE 4310-05-M

GENERAL SERVICES ADMINISTRATION

41 CFR Parts 201-21, 201-23, 201-38, 201-39, and 201-41

The Use of Telecommunications by the Federal Government

AGENCY: Information Resources Management Service, GSA.

ACTION: Notice of proposed rulemaking.

SUMMARY: This proposed final rule amends the Federal Information Resources Management Regulation (FIRMR) regarding the management and use of Government telecommunications systems and services by Government agencies. It revises telecommunications major change descriptions and agency information submission requirements to GSA. It identifies information that an agency must submit to GSA to obtain major telecommunications facilities or services. This proposed rule increases agency authority for the use of GSA's multiyear contracting authority for small telecommunications systems.

Deregulation of the telecommunications industry and rapidly changing technology in the marketplace necessitate revision of GSA's policies and guidance. The intent of this regulation is to assist agencies in defining telecommunications requirements; to clarify GSA's responsibilities in meeting these requirements, including national security and emergency preparedness; and to provide, when appropriate for GSA to do so, common use telecommunications systems and services that meet Federal agency needs at the lowest overall cost to the Government.

DATE: Comments are due November 23, 1987.

ADDRESS: Comments should be submitted to the General Services Administration (KMP), Project 87-15, Washington, DC 20405.

FOR FURTHER INFORMATION CONTACT: John F. Stewart, Policy Branch, (KMPP), Information Resources Management Service, (202) 566-0834, or FTS 566-0834. The full text of the Project 87-15 proposed rule is available upon request, by telephoning (202) 566-0194 or FTS 566-0194.

SUPPLEMENTARY INFORMATION: (1) This proposed regulation will substantially change GSA's role in the management, review, and provision of telecommunications within the Federal Government. The changes reflect the current marketplace and the rapid change in the technology of telecommunications applications. In addition, the boundaries between local and intercity telecommunications service with distinctions between data and voice are fading. This regulation will make significant changes to FIRMR Parts 201-21, 201-23, 201-38, 201-39, and 201-41.

Part 201-21 will provide an overview of telecommunications policy and direction within the Government.

Part 201-23 will provide an expanded regulatory delegation of multiyear contracting authority for agency-managed small telecommunications systems.

Part 201-38 will serve as the primary FIRMR part covering policies for the management of agency telecommunications resources including required pre-procurement analyses. It will also cover telecommunications major changes requiring GSA approval and prescribe the information and procedures for submissions to GSA to obtain approval for agency systems and services.

Part 201-39 will be reserved for future use in an effort to improve the structure of the FIRMR.

Part 201-41 will be retitled to focus on FTS Governmentwide telecommunications systems and services. How to use GSA common use systems and how to request service directly from the GSA office providing the needed service is also covered.

(2) The General Services Administration (GSA) has determined that the proposed rule is not a major rule for purposes of Executive Order 12291 of February 17, 1981. GSA decisions are based on adequate information concerning the need for, and the consequences of the rule. The rule is written to ensure maximum benefits to Federal agencies. This is a Governmentwide management regulation that will have little or no net cost effect on society. The rule is therefore not likely to have a significant economic impact on a substantial number of small entities under the Regulatory Flexibility Act (5 U.S.C. 601 et seq.).

List of Subjects in 41 CFR Parts 201-21, 201-23, 201-38, 201-39, and 201-41

Government property management, Government procurement, Telecommunications, Information resource activities, Federal Telecommunications System.

Dated: May 8, 1987.

Francis A. McDonough,

Deputy Commissioner for Federal Information Resources Management.

[FR Doc. 87-21882 Filed 9-22-87; 8:45 am]

BILLING CODE 6820-25-M

FEDERAL COMMUNICATIONS COMMISSION

47 CFR Parts 1 and 73

[MM Docket No. 87-314; FCC 87-265]

Practice and Procedure, and Radio (and Television) Broadcast Services; Amendment of the Commission's Rules To Prevent Certain Abuses of the Commission's Processes

AGENCY: Federal Communications Commission.

ACTION: Proposed rule.

SUMMARY: The Communications Act of 1934, as amended, Title 47 of the U.S. Code, and the Commission's Rules, Title 47 of the Code of Federal Regulations, establish various processes and procedures which are designed to enable public participation in the Commission's proceedings or to broaden the pool of applicants or options for the various services which the Commission authorizes. Two such processes are the petition to deny process in broadcast application proceedings, 47 CFR 73.3584, and the comment and counterproposal process in broadcast channel allocation proceedings, 47 CFR 1.420. Some individuals and groups are abusing these processes by using them not for the purposes for which they are intended, but instead to extract payments from parties who are participating in the Commission's proceedings in good faith. In order to prevent this abuse of process, the Commission proposes to amend these two rules so as to prohibit any agreement under the terms of which a petitioner to deny in an application proceeding (or a cross-filer in an allocation proceeding) would withdraw its petition (or counterproposal) in exchange for any consideration in excess of its actual expenditures legitimately and prudently made in the preparation and prosecution of its pleading. In addition, in connection with its consideration of abuses of the petition to deny process, the Commission proposes to review its policy of scrutinizing programming provisions in citizens agreements which are submitted as amendments to pending applications. Citizens agreements are not abusive in principle. The necessity for this review is created by a number of recent changes in the Commission's regulatory policy concerning broadcast programming oversight.

DATES: Comments must be filed on or before October 26, 1987, and reply comments on or before November 10, 1987.

ADDRESS: Federal Communications Commission, Washington, DC 20554.

FOR FURTHER INFORMATION CONTACT: Mark L. Solberg, Policy and Rules Division, Mass Media Bureau, (202) 632-7792.

SUPPLEMENTARY INFORMATION: This is a summary of the Commission's Notice of Proposed Rule Making in MM Docket No. 87-314, adopted August 4, 1987, and released September 3, 1987.

The full text of this Commission decision is available for inspection and copying during normal business hours in the FCC Dockets Branch (Room 230), 1919 M Street NW., Washington, DC 20554. The complete text of this decision may also be purchased from the Commission's copy contractor, International Transcription Services, (202) 857-3800, 2100 M Street NW., Suite 140, Washington, DC 20037.

The collection of information requirement contained in this proposed rule has been submitted to OMB for review under section 3504(h) of the Paperwork Reduction Act. Persons wishing to comment on this collection of information requirement should direct their comments to the Office of Information and Regulatory Affairs, Office of Management and Budget, Washington, DC 20503, Attention: Desk Officer for Federal Communications Commission.

Summary of Notice of Proposed Rule Making

1. The petition to deny process described in section 309(d) of the Communications Act, as amended, 47 U.S.C. 309(d), and detailed in § 73.3584 of the Commission's Rules, 47 CFR 73.3584, is designed specifically for the purpose of enabling interested parties to provide factual information to the Commission concerning the fitness of applicants to be Commission licensees. Petitions to deny serve a vital purpose, because the Commission's duties and jurisdiction are so vast that it cannot monitor or oversee the qualifications or performance of every one of thousands of applicants and licensees. The potential for abuse of the petition to deny process arises out of its central importance in the Commission's licensing scheme and the inherent uncertainty of the application process. A petition to deny a license renewal application threatens the loss of most or all of the licensee's substantial investment. A related abuse involves petitions filed against assignment and transfer applications, where even brief delays may doom such transactions. In either situation, even if the petition to deny is ultimately rejected by the Commission, the applicant is subjected to considerable expense, effort and uncertainty in defending against it. Thus, some individuals or groups may not file petitions to deny for the proper purpose of bringing relevant information to the Commission's attention, but instead file to extract some financial or other improper consideration from the applicant. In many cases an applicant might find it simpler and less expensive to accede to a frivolous petitioner's demand for payment than to oppose the petition to deny.

2. In formulating a remedy for this abuse of the petition to deny process it is essential to bear in mind that the Commission encourages the resolution of disputes at the local level. Accordingly, any remedy intended to prevent abusive petitions must be fashioned so as to avoid deterring

legitimate petitioners from resolving their disputes with applicants at the local level and reaching agreements in good faith to withdraw their petitions. The Commission believes that this abuse of the petition to deny process would be deterred or prevented (without casting a chilling effect on the filing or withdrawal of legitimate, good faith petitions) by the rule proposed in this Notice of Proposed Rule Making (Notice), which would prohibit any petitioner and the applicant against whom the petitioner has filed from entering into any agreement under the terms of which the petitioner would withdraw its petition in exchange for any payment in excess of its actual expenditures legitimately and prudently made in the preparation and prosecution of the petition. The Commission notes that some withdrawal agreements have included provisions for future payments of "contributions" or "service payments" to the petitioner, or the establishment of "consulting contracts" under which substantial sums of money would be paid to the petitioner. Such payments obviously do not constitute reimbursement of actual expenditures legitimately and prudently made in the preparation or prosecution of a petition to deny, and the Notice states that such payments would be prohibited under the proposed rule.

3. The Commission is also concerned that some individuals or groups may use the *threat* of filing a petition to deny in order to extract financial consideration from an applicant. Such action should also be deemed an abuse of the Commission's processes. Accordingly, the Commission proposes to adopt a rule which would prohibit any individual or group from threatening to file a petition to deny unless given money or other consideration, or offering to refrain from filing a petition to deny in exchange for the payment of money by the applicant. Reimbursement of reasonable and prudent expenses incurred by an individual or group in the course of legitimate consultation or negotiation with the licensee or applicant would not be considered to be payment for refraining from filing a petition to deny within the meaning of the proposed rule.

4. A citizens agreement is a formal, written agreement between a citizens' group and a broadcast licensee or applicant, sometimes in the form of a contract, which addresses some aspect of station operations. Such agreements may be made in consideration for the withdrawal of petitions to deny, or may be reached during the license term. Citizens agreements are not abusive in principle. Subject to the nondelegable responsibilities imposed by the Communications Act, under which licensees must retain ultimate control over and responsibility for the operation of the station, licensees are free to enter into agreements or contracts that they wish. The Commission currently scrutinizes citizens agreements only when they are submitted to the Commission as amendments to pending applications or when specifically requested to do so, and then only to ensure that the licensee retains its nondelegable control and responsibility. The Commission rejects agreements which provide for excessive or improper delegation of control or authority. Provisions which do not involve excessive or improper delegations of control or authority are considered by the Commission to be representations to be evaluated and enforced as are other representations contained in applications. Thus, programming provisions in citizens agreements have been evaluated in accordance with the "promise versus performance" test which the Commission formerly applied to all programming representations contained in applications.

5. However, the Commission has gradually reduced the scope and detail of broadcast programming oversight. Detailed programming proposals are no longer required in construction permit, renewal or transfer applications, and the "promise versus performance" test used to determine whether such proposals had been fulfilled is no longer relevant. Since the Commission no longer deems it appropriate to enforce specific programming commitments through the initial license or renewal process through the "promise versus performance" test, it questions and seeks comment on whether it should continue to bind applicants to such agreements by applying that test. Further, the Commission believes that its general policies proscribing improper delegations of control over programming are sufficient to prevent licensee abdication through agreements with outside groups, and sees no need to maintain a separate but duplicative policy concerning programming provisions in citizens agreements.

6. With regard to the Commission's rule making proceeding initiated to allocate available broadcast channels to the various communities throughout the United States, any interested person may seek to have the FM Table of Allotments, § 73.202 of the Commission's Rules, or the TV Table of Allotments, § 73.606 of the Rules, amended by filing a petition for rule making in accordance with § 1.401 and 1.420 of the Rules. Section 1.420(d) of the Rules provides for the filing of counterproposals. A party filing a counterproposal is referred to as a "cross-filer." The potential for abuse in this area arises out of the fact that the Commission has established priorities to be utilized in making the choice between proposals and counter proposals in allocation rule making proceedings. Wherever present, these priorities will dictate the selection between proposals. Thus, a cross-filer may fashion its counterproposal so as to have an insurmountable advantage over the initial proposal. For instance, if a petition for rule making seeks to allocate a second full-time service to a particular community, a counterproposal to allocate a *first* full-time local service to a nearby community would automatically prevail. Since there is no limit to the nature or amount of payment that a cross-filer may receive in exchange for agreeing to withdraw its counterproposal, the cross-filer may file not because it actually seeks the allocation, but because the inital petitioner may be willing to pay a premium to have the counterproposal withdrawn.

7. Initially, the Commission observes that petitioners and cross-filers in allocation rule making proceedings are currently required to include in their pleadings an expression of willingness and intention to apply for the facility if the allocation is granted, and that a petitioner or cross-filer which has no real interest in constructing a station would seem to be misrepresenting a material fact. The Commission therefore requests comments on whether abuses of the allocation counterproposal process could be sanctioned under, and thereby deterred by, 73.1015 of the Commission's Rules, 47 CFR 73.1015, which prohibits applicants, permittees or licensees from making misrepresentations or willful material omissions in their submissions to the Commission.

8. The Commission also seeks comments on whether this abuse of the counterproposal process would be more effectively deterred or prevented by a rule similar to that proposed for petitions to deny. The proposed rule would prohibit the parties to an allocation rule making proceeding from entering into an agreement under the terms of which the cross-filer would withdraw its counterproposal in exchange for payment in excess of the cross-filer's actual expenses legitimately and prudently made in the preparation and prosecution of the petition to deny.

9. In determining whether this proposed rule should be adopted, it is essential to remember that the good faith withdrawal of initially legitimate counterproposals serves the public interest and, accordingly, any remedy intended to prevent abusive counterproposals must be fashioned so as to avoid deterring a legitimate cross-filer from reaching a good-faith agreement with the initial petitioner to withdraw the counterproposal. In this regard, the Commission must take into consideration one significant difference between the petition to deny situation and the allocation rule making situation. The *only* legitimate purpose of a petition to deny is to bring information to the Commission's attention concerning the qualifications of applicants to be Commission licensees. A petitioner to deny has no legitimate expectation of making a profit as a result of its participation in the Commission's proceedings. Thus, a prohibition against making such a profit would not deter the filing or the withdrawal of a legitimate, good faith petition to deny. In contrast, parties in allocation rule making proceedings participate with the legitimate and explicit expectation of making a profit from the operation of the station, should they prevail in the rule making proceeding and ultimately be awarded the license in an application proceeding. If, upon withdrawal, a legitimate cross-filer could do no more than recoup its expenses, the cross-filer might prefer to continue participation in the allocation proceeding on the chance that it could subsequently be awarded a potentially valuable broadcast license. Thus, a rule prohibiting withdrawal of counterproposals in exchange for payment in excess of expenses might deter the good faith withdrawal of initially legitimate counterproposals. Interested persons are specifically requested to comment on this possible effect of the proposed rule, and to suggest alternatives.

10. Generally, comments are sought on the experiences of applicants and licensees who have been importuned to make financial concessions under the circumstances described in the Notice; on the types of payments which should be considered to be legitimate and prudent in connection with a petition to deny or a counterproposal; and on possible alternatives to the proposed rules.

11. This is a nonrestricted notice and comment rule making proceeding. *See* § 1.231 of the Commission's Rules, 47 CFR 1.231, for rules governing permissible *ex parte* contacts.

12. Pursuant to the Regulatory Flexibility Act of 1980, 5 U.S.C. 603, the Commission observes that adoption of the proposed rules would result in a reduction in the number of frivolous petitions to deny in application proceedings and counterproposals in allocation rule making proceedings, and would eliminate the possibility that frivoulous or coercive parties may reap windfall profits from the filing of such pleadings. Consequently, the integrity of the Commission's processes would be preserved without affecting the ability of legitimate parties to participate in the Commission's proceedings. Further, the costs to legitimate, good faith parties of opposing or settling such frivolous pleadings would be eliminated. Public comment is requested on the initial regulatory flexibility analysis set out in full in the Commission's complete decision. The Secretary shall cause a copy of this Notice, including the initial regulatory flexibility analysis, to be sent to the Chief Counsel for Advocacy of the Small Business Administration in accordance with section 603(a) of the Regulatory Flexibility Act, Pub. L. 96-354, 94 Stat. 1164, 5 U.S.C. 601 et seq. (1981).

13. The proposals contained herein have been analyzed with respect to the Paperwork Reduction Act of 1980 and found to contain a new or modified form, information collection and/or record keeping, labeling, disclosure, or record retention requirement, but will not significantly increase burden hours imposed on the public. Implementation of any new or modified requirement or burden will be subject to approval by the Office of Management and Budget as prescribed by the Act.

14. Accordingly, the Commission adopts this Notice of Proposed Rule Making pursuant to authority contained in sections 4(i) and 303(r) of the Communications Act of 1934, as amended, 47 U.S.C. 4(i) and 303(r).

15. Pursuant to applicable procedures set forth in §§ 1.415 and 1.419 of the Commission's Rules, 47 CFR 1.415 and 1.419, interested parties may file comments on or before October 26, 1987 and reply comments on or before November 10, 1987. All relevant and timely comments will be considered by the Commission before final action is taken in this proceeding.

List of Subjects

47 CFR Part 1

Administrative practice and procedure.

47 CFR Part 73

Radio broadcasting.

47 CFR Parts 1 and 73 are proposed to be amended as follows:

1. The authority citation for Parts 1 and 73 continues to read as follows:

Authority. 47 U.S.C. 154 and 303.

PART 1—[AMENDED]

2. It is proposed that § 1.420 be amended by adding new paragraph (i) to read as follows:

§ 1.420 Additional procedures in proceedings for amendment of the FM, Television or Air-Ground Table of Assignments.

* * * * *

(i)(1) When comments containing a counterproposal have been filed against a petition for rule making in the broadcast services, the petitioner and the cross-filer are prohibited from entering into an agreement to withdraw the counterproposal if the provisions of the agreement or understanding between the parties provide for, or permit, payment to the cross-filer or its employees, representatives, agents or designees, of a sum in excess of the aggregate amount clearly shown to have been legitimately and prudently expended by the cross-filer in the preparation and prosecution of the counterproposal.

(2) When a petitioner and a cross-filer reach an agreement on the withdrawal of a counterproposal, the parties shall submit a Joint Request for Withdrawal of Counterproposal which shall be accompanied by a copy of the agreement and declarations by both the petitioner and the cross-filer that, except as clearly disclosed in the Joint Request and any attachments thereto, there are no agreements, understandings or contracts for reimbursement of the cross-filer's expenses or other payments to the cross-filer.

(3) When the cross-filer is to receive reimbursement of its expenses, the Joint Request for Withdrawal of Counterproposal shall include an itemized accounting of such expenses together with such factual information as the parties rely on for the requisite showing that those expenses represent legitimate and prudent outlays made solely for the purposes allowable under paragraph (i)(1) of this section.

PART 73—[AMENDED]

3. It is proposed that § 73.3584 be amended by adding new paragraphs (e) and (f) to read as follows:

§ 73.3584 Petitions to deny.

* * * * *

(e)(1) When a petition to deny has been filed against an application, the applicant and the petitioner are prohibited from entering into an agreement to withdraw the petition if the provisioins of the agreement or understanding between the parties provide for, or permit, payment to the petitioner or its employees, representatives, agents or designees, of a sum in excess of the aggregate amount clearly shown to have been legitimately and prudently expended by the petitioner in the preparation and prosecution of the petition to deny.

(2) When an applicant and a petitioner reach an agreement on the withdrawal of a petition to deny, the parties shall submit a Joint Request for Withdrawal of Petition to Deny which shall be accompanied by a copy of the agreement and declarations by both the applicant and the petitioner that, except as clearly disclosed in the Joint Request and any attachments thereto, there are no agreements, understandings or contracts for reimbursement of the petitioner's expenses or other payments to the petitioner.

(3) When the petitioner is to receive reimbursement of its expenses, the Joint Request for Withdrawal of Petition to Deny shall include an itemized accounting of such expenses together with such factual information as the parties rely on for the requisite showing that those expenses represent legitimate and prudent outlays made solely for the purposes allowable under paragraph (e)(1) of this section.

(f) No party within the meaning of section 309(d) of the Communications Act, as amended, and paragraph (a) of this section shall (1) threaten to file a petition to deny an application unless payment is received from the applicant; or (2) offer to refrain from filing a petition to deny in exchange for payment from the applicant. Reimbursement by an applicant of reasonable, necessary and prudent expenses incurred by the individual or group in the course of consultation and negotiation with the applicant concerning its qualifications to be or its performance as a Commission licensee will not be considered to be payment for refraining from filing a petition to deny for the purposes of this section.

Federal Communications Commission.

William J. Tricarico,

Secretary.

[FR Doc. 87-21865 Filed 9-22-87; 8:45 am]

BILLING CODE 6712-01-M

DEPARTMENT OF TRANSPORTATION

National Highway Traffic Safety Administration

49 CFR Part 571

[Docket No. 87-12; Notice 1]

Federal Motor Vehicle Safety Standards; New Pneumatic Tires

AGENCY: National Highway Traffic Safety Administration (NHTSA), Department of Transportation.

ACTION: Request for comments; Grant of petition for rulemaking.

SUMMARY: General Motors Corporation (GM) submitted a petition for rulemaking to amend FMVSS No. 109, *New Pneumatic Tires,* to establish new performance requirements and test conditions for non-pneumatic spare tire assemblies. This notice grants GM's petition and requests comments on a number of issues concerning possible requirements for non-pneumatic tire assemblies.

DATES: Comment closing date: December 22, 1987.

ADDRESS: Comments should refer to the docket number and notice number and be submitted to: Docket Section, Room 5109, National Highway Traffic Safety Administration, 400 Seventh Street SW., Washington, DC 20590. (Docket Room hours 8:00 a.m. to 4:00 p.m.)

FOR FURTHER INFORMATION CONTACT: Mr. Larry Cook, Office of Vehicle Safety Standards, National Highway Traffic Safety Administration, 400 Seventh Street SW., Washington, DC 20590, (202) 366-4803.

SUPPLEMENTARY INFORMATION: General Motors Corporation (GM) submitted a petition for rulemaking to amend Federal Motor Vehicle Safety Standard No. 109, *New Pneumatic Tires,* to establish performance requirements and test conditions for non-pneumatic spare tire assemblies. According to the petitioner, amending the standard would allow use of a new spare tire concept, developed by the Uniroyal Goodrich Company, having the potential for reducing weight and space requirements and a positive effect on fuel economy. The non-pneumatic spare tire concept would be an alternative to current pneumatic compact spare assemblies. NHTSA has concluded that GM's petition raises a number of issues which should be addressed in rulemaking, and the petition is hereby granted.

In order to obtain assistance in analyzing the safety issues related to non-pneumatic tires, NHTSA requests public comments. The agency is particularly interested in comments concerning whether non-pneumatic tires should be permitted, as spares, or otherwise. If so, the public is asked to comment on whether the performance requirements currently specified in Standard No. 109 are sufficiently comprehensive and performance-oriented to address all characteristics that may affect the safety of non-pneumatic tires, or whether additional and/or different types of requirements are needed to ensure the same level of safety as pneumatic tires. Among the areas of concern are the ability of the tires to withstand road hazards and exposure to moisture and varying temperature; the adequacy of bonding of tread to tire and tire to rim; and potential impacts of the tires on vehicle handling, cornering, traction, and braking, including off-road recovery.

In order to ensure that possible requirements for non-pneumatic tires would be appropriate for all such tires, NHTSA requests detailed information from tire manufacturers concerning all potential designs for such tires. The agency also requests available test information on prototype non-pneumatic tires, including but not limited to test procedures, test data and evaluations of test results, related to Standard No. 109 and other safety issues.

The granting of this petition does not mean that a rule will necessarily be issued. The determination of whether to issue a rule is made in the course of the rulemaking proceeding, in accordance with statutory criteria.

Interested persons are invited to submit comments. It is requested but not required that 10 copies be submitted.

All comments must not exceed 15 pages in length. (49 CFR 553.21). Necessary attachments may be appended to these submissions without regard to the 15-page limit. This limitation is intended to encourage commenters to detail their primary arguments in a concise fashion.

If a commenter wishes to submit certain information under a claim of confidentiality, three copies of the complete submission, including purportedly confidential business information, should be submitted to the Chief Counsel, NHTSA, at the street address given above, and seven copies from which the purportedly confidential information has been deleted should be submitted to the Docket Section. A request for confidentiality should be accompanied by a cover letter setting forth the information specified in the agency's confidential business information regulation. 49 CFR Part 512.

Those persons desiring to be notified upon receipt of their comments in the rules docket should enclose a self-addressed, stamped postcard in the envelope with their comments. Upon receiving the comments, the docket supervisor will return the postcard by mail.

List of Subjects in 49 CFR Part 571

Imports, Motor vehicle safety, Motor vehicles, Rubber and rubber products, Tires.

Issued on September 17, 1987.

Barry Felrice,

Associate Administrator for Rulemaking.

[FR Doc. 87-21885 Filed 9-22-87; 8:45 am]

BILLING CODE 4910-59-M

---

49 CFR Part 571

Federal Motor Vehicle Safety Standards; Transmission Shift Lever Sequence, Starter Interlock, and Transmission Braking Effect

AGENCY: National Highway Traffic Safety Administration (NHTSA), Department of Transportation.

ACTION: Denial of petition for rulemaking.

SUMMARY: This notice denies a petition by John Fiske Brown Associates requesting that NHTSA issue a rule requiring vehicles to be equipped with an ignition kill switch integrated with the accelerator control. The petitioner asserted that such a switch would prevent accidents where drivers mistakenly place their foot on the accelerator rather than the brake pedal. NHTSA is denying the petition because it believes that an ignition kill switch could itself be a safety hazard, since drivers could lose power in critical situations.

FOR FURTHER INFORMATION CONTACT: Mr. Kenneth Rutland. Office of Vehicle Safety Standards, National Highway Traffic Safety Administration, 400 Seventh Street SW., Washington, DC (202-366-5267).

SUPPLEMENTARY INFORMATION: John Fiske Brown Associates (Brown Associates), Forensic Engineers, submitted a petition for rulemaking to amend Federal Motor Vehicle Safety Standard No. 102, *Transmission Shift Lever Sequence, Starter Interlock, and Transmission Braking Effect.* The petitioner stated that in recent years there have been numerous major investigations precipitated by vehicles that accelerated suddenly and without warning. According to the petitioner, in the majority of these individual cases, the drivers insist that they have their foot firmly planted on the brake pedal and that the car accelerates out of control. The petitioner stated that the manufacturers, however, have alleged that the drivers were confused and their foot was placed upon the accelerator rather than the brake pedal.

Brown Associates requested that NHTSA require all new vehicles, and in particular those equipped with automatic transmissions, to have an ignition kill switch integrated with the accelerator control. The switch would be coupled to the accelerator linkage so that, if a driver pressed the accelerator completely to the end of its travel while also applying additional force, the switch would interrupt the ignition circuit so that the vehicle would not continue to accelerate under power. According to the petitioner, such a modification would eliminate those "sudden acceleration" accidents that are caused by driver error.

NHTSA believes that an ignition kill switch, as described by the petitioner, could itself be a safety hazard. In a variety of situations, drivers may depress the accelerator hard in order to obtain maximum acceleration. For example, drivers trying to pass another vehicle or trying to merge onto a high speed highway occasionally misjudge the distance between their vehicle and the oncoming traffic. When a driver has less time to complete the maneuver than anticipated, he or she might accelerate hard to reduce the time needed to complete the maneuver. Engine cutoff in these situations could result in serious accidents. For these reasons, NHTSA denies Brown Associates' petition for rulemaking.

List of Subjects in 49 CFR Part 571

Imports, Motor vehicle safety, Motor vehicles, Rubber and rubber products, Tires.

Issued on September 17, 1987.

Barry Felrice,

Associate Administrator for Rulemaking.

[FR Doc. 87-21886 Filed 9-22-87; 8:45 am]

BILLING CODE 4910-59-M

DEPARTMENT OF THE INTERIOR

Fish and Wildlife Service

50 CFR Part 23

Addition of Species by Government of Honduras to Appendix III; Convention on International Trade in Endangered Species of Wild Fauna and Flora

AGENCY: Fish and Wildlife Service, Interior.

ACTION: Proposed rule.

SUMMARY: The Convention on International Trade in Endangered Species of Wild Fauna and Flora (Convention) regulates international trade in certain species of animals and plants. Appendices I, II, and III to the Convention list those species for which trade is controlled. Appendix III includes species that any Party nation identifies as being subject to regulation within its jurisdiction for the purpose of preventing or restricting exploitation, and as needing the cooperation of other Parties in the control of trade.

The Convention Secretariat has notified the Parties to the Convention that the Government of Honduras has requested the addition to Appendix III of six species of mammals, seven species of birds, and nine species of reptiles, all of which are native in Honduras. These requested additions are not subject to a vote of the Parties, but any Party may enter a reservation at any time to any of these species listings.

The purpose of this document is to alert the public to the addition of these species to Appendix III and to request comments as to whether the United States should enter a reservation on any of these species. The U.S. Fish and Wildlife Service (Service) proposes to add these species to the list in the Code of Federal Regulations.

DATES: The Appendix III amendment entered into effect on April 13, 1987, for all Parties except any entering reservations. Nations that are Parties to the Convention may enter reservations at any time. The Service will consider comments received by October 19, 1987, in determining whether the United States should enter a reservation. The intention is to publish the final rule on these species in the same document that presents the final changes to the Appendices resulting from actions at the Sixth Meeting of the Conference of the Parties held in Ottawa, Canada, July 12-24, 1987.

ADDRESSES: Please send correspondence concerning this notice to the Chief, Office of Scientific Authority; Mail Stop: Room 527, Matomic Building, U.S. Fish and Wildlife Service; Department of the Interior, Washington, DC 20240. Background materials will be available for public inspection from 8:00 a.m. to 4:00 p.m., Monday through Friday, in Room 537, 1717 H Street, NW., Washington, DC.

FOR FURTHER INFORMATION CONTACT: Dr. Charles W. Dane at the address given above, or telephone (202) 653-5948.

SUPPLEMENTARY INFORMATION:

Background

The Convention Secretariat circulated a notification to all Party nations on January 13, 1987, to inform them of the present amendment. After belatedly learning of this notification, the Service requested a retransmission which was received in April. In accordance with the provisions of paragraph 1 of Article XVI of the Convention, the Government of Honduras has submitted to the Secretariat the following species for inclusion in Appendix III:

Class: Mammalia

Order: Rodentia

Family: Erethizontidae

Sphiggurus mexicanus (=Coendou mexicanus)
(Middle American prehensile-tailed porcupine, coendou)

Family: Agoutidae

Agouti (=Cuniculus) paca
(greater paca, spotted cavy)

Family: Dasyproctidae

Dasyprocta punctata
(common agouti)

Order: Carnivora

Family: Procyonidae

Nasua nasua (=N. narica)
(common coati, coatimundi)
Potos flavus
(kinkajou)

Family: Mustelidae

Eira barbara
(tayra)

Class: Aves

Order: Anseriformes

Family: Anatidae

Cairina moschata
(Muscovy duck)
Dendrocygna autumnalis
(black-bellied whistling duck or tree duck)
Dendrocygna bicolor (=D. fulva)
(fulvous whistling duck or tree duck)

Order: Falconiformes

Family: Cathartidae

Sarcoramphus papa
(king vulture)

Order: Galliformes

Family: Cracidae

Crax rubra
(great curassow)
Ortalis vetula
(plain chachalaca)
Penelope purpurascens
(northern crested guan)

Class: Reptilia

Order: Serpentes

Family: Elapidae

Micrurus diastema
(Atlanta coral snake)
Micrurus nigrocinctus
(black-banded coral snake)

Family: Viperidae

Agkistrodon bilineatus
(cantil)
Bothrops asper
(terciopelo)
Bothrops nasutus
(rainforest hognosed pit-viper)
Bothrops nummifer
(jumping pit-viper)
Bothrops ophryomegas
(slender hognosed pit-viper)
Bothrops schlegelii
(eyelash palm pit-viper)
Crotalus durissus
(tropical rattlesnake, cascabel)

In accordance with the provisions of the Convention in Article XVI, paragraph 2, inclusion of those species in Appendix III took effect 90 days after the date of the notification, i.e., on April 13, 1987, for all Parties except any entering reservations (August 14, 1987, **Federal Register**; 52 FR 30456).

Under the Convention, trade in specimens of species included in Appendix III requires the issuance of either an export permit, a re-export certificate or a certificate of origin. Export permits are required if the shipment originates from the nation that has included the species in Appendix III. The export of specimens of these from other nations requires the presentation of "certificates of origin," or in the case of re-export, "certificates from the nation of re-export," which are required to show that the specimen was processed in that nation and/or is being re-exported. Trade in any specimen of these species, whether alive or dead, will be covered by the provisions of the Convention, as will trade in any readily recognizable part or derivative.

As a Party to the Convention, the United States has an opportunity to reserve on amendments to the appendices. Article XVI of the Convention enables any Party to exempt itself from implementing the Convention for a particular species if it enters a reservation with respect to that species. In the case of a nation that is a Party at the time an amendment to Appendix III is requested, a reservation may be entered at any time after the Secretariat notifies the Parties of the amendment placing the species in Appendix III.

The Service requests comments on whether the United States should enter a reservation on this recent amendment. At this time, the Service does not propose to recommend a reservation and would consider doing do only if valid and compelling reasons are presented to show that implementation of the amendment would be contrary to the interests or laws of the United States.

This rule implements changes in the listings in Appendix III of the Convention that were requested by the Government of Honduras and that the United States is bound to accept, unless it enters a reservation. Even if the United States were to enter a reservation, under the Lacey Act Amendments of 1981 (16 U.S.C. 3371 et seq.) Convention export permits, certificates of orgin, or certificates of re-export, as appropriate, may be required from other Parties that do not enter reservations, and other Parties should require similar certificates for exports from the United States. An extended discussion on reservations was presented in the November 22, 1985, **Federal Register**; 50 FR 48213).

Note.—The Department has determined that amendments to the Convention appendices, which result from actions of the Parties to the Convention, do not require the preparation of Environmental Assessments as defined under authority of the National Environmental Policy Act (42 U.S.C. 4321–4347). The Department also has determined that this listing action is not a rule for purposes of Executive Order 12291 and the Regulatory Flexibility Act (5 U.S.C. 601). This rule does not contain information collection requirements that require approval by the Office of Management and Budget under 44 U.S.C. 3501 et seq.

This document was prepared by Arthur M. Greenhall, Staff Zoologist, Office of Scientific Authority, under the authority of the Endangered Species Act of 1973, as amended (16 U.S.C. 1531 et seq.).

List of Subjects in 50 CFR Part 23

Endangered and threatened wildlife, Exports, Fish, Imports, Marine mammals, Plants (agriculture, Treaties.

Proposed Regulation Promulgation

For reasons set out in the preamble of this document, it is hereby proposed to amend Part 23 of Title 50, Code of Federal Regulations, by adding the species named above for Honduras to the list of species included in Appendix III.

Dated: September 16, 1987.

Susan Recce,

Acting Assistant Secretary for Fish and Wildlife and Parks.

[FR Doc. 87-21908 Filed 9-22-87; 8:45 am]

BILLING CODE 4310-55-M

50 CFR Part 23

Changes in List of Species in Appendices to the Convention on International Trade in Endangered Species of Wild Fauna and Flora

AGENCY: Fish and Wildlife Service, Interior.

ACTION: Proposed rule.

SUMMARY: The Convention on International Trade in Endangered Species of Wild Fauna and Flora (Convention) regulates international trade in certain animals and plants. Species for which trade is controlled are listed in Appendices I, II, and III to the Convention.

This document announces decisions by the Conference of Parties to CITES on amendments to Appendices I and II, and invites comments on whether the United States should enter reservations on any of the amendments. The effect of a reservation would be to exempt this country from implementing the Convention for a particular species. However, even if a reservation were taken some importing countries would require comparable documents, and many importers to the United States would be required, under the Lacey Act Amendments of 1981, to obtain permits issued by foreign countries. The amendments described in this document will enter into effect on October 22, 1987.

DATE: The Service will consider all comments received by October 16, 1987 in determining whether the United States should enter any reservations.

ADDRESS: Please send correspondence concerning this document to the Office of Scientific Authority; Mail Stop: Room 527; Matomic Building: U.S. Fish and Wildlife Service; Department of the Interior; Washington, DC 20240. Materials received will be available for public inspection from 8:00 a.m. to 4:00 p.m., Monday through Friday, in room 537, 1717 H Street, NW., Washington, DC.

FOR FURTHER INFORMATION CONTACT: Dr. Charles W. Dane, Office of Scientific Authority, U.S. Fish and Wildlife Service, Washington, DC 20240, telephone (202) 653-5948.

SUPPLEMENTARY INFORMATION:

Background

The Convention regulates import, export, reexport, and introduction from the sea of certain animal and plant species. Species for which trade is controlled are included in three appendices. Appendix I includes species threatened with extinction that are or may be affected by trade. Appendix II includes species that although not necessarily threatened with extinction may become so unless trade in them is strictly controlled. It also lists species that must be subject to regulation in order that trade in other currently or potentially threatened species may be brought under effective control (e.g., because of difficulty in distinguishing specimens of currently or potentially threatened species from those of other species). Appendix III includes species that any Party nation identifies as being subject to regulation within its jurisdiction for purposes of preventing or restricting exploitation, and for which it needs the cooperation of other Parties in controlling trade.

Any Party nation may propose amendments to Appendices I and II for consideration at meetings of the Conference of the Parties. The text of any proposal must be communicated to the Convention's Secretariat at least 150 days before the meeting. The Secretariat must then consult the other Parties and appropriate intergovernmental agencies, and communicate their responses to all Parties no later than 30 days before the meeting. Amendments are adopted by a two-thirds majority of the Parties present and voting.

Recent Decisions

The Sixth Meeting of the Conference of the Parties to CITES was held on July 12-24, 1987, in Ottawa, Canada. At the meeting, the Parties considered 115 proposals to amend the Appendices. These were listed in the **Federal Register** on July 10, 1987, for U.S. proposals (52 FR 26049) and for proposals by the other Parties (52 FR 26043). Results of voting by the Conference of the Parties are given in the following table.

Species	Proposed amendment	Proponent	Final decision of the parties
MAMMALS			
Order Marsupialia:			
Burramys parvus (Mountain pygmy possum).	Remove from II	Switzerland	Withdrawn.
Myrmecobius fasciatus (Marsupial anteater).	Add to I	Australia	Do.
Phalanger lullulae (Woodlark Island cuscus).	do	Papua New Guinea	Do.
Order Insectivora:			
Erinaceus frontalis (African hedgehog)	Remove from II	Switzerland	Approved.
Order Chiroptera:			
Pteropus insularis, P. macrotis, P. mariannus, P. molossinus, P. phaeocephalus, P. pilosus, P. samoensis, P. tokudae and P. tonganus.	Add to II [1]	United States	Do.
Order Lagomorpha:			
Nesolagus netscheri (Sumatran short-eared rabbit).	Remove from II	Switzerland	Do.
Order Rodentia:			
Dipodomys phillipsii phillipsii (Phillips' kangaroo rat).	do	Do.	Do
Lariscus hosei (Four-striped or Bornean black-striped ground squirrel).	do	do	Do.
Notomys spp. (Hopping mouse)	do	Australia	Do.
Pseudomys fumeus (Smokey mouse)	Remove from I	do	Do.

Species	Proposed amendment	Proponent	Final decision of the parties
Pseudomys shortridgei (Heath rat, Shortridge's native mouse).	Remove from II	do	Do.
Order Carnivora:			
Cynogale bennettii (Otter civet)	do	Switzerland	Withdrawn.
Dusicyon gymnocercus (Pampas fox)	Add to II	Uruguay	Approved.
Eupleres goudotii (Malagasy mongoose)	Remove from II	Switzerland	Rejected.
Felis yagouaroundi (Jaguarundi)	Inclusion in I (inclusion of the populations of Central and North America in I in lieu of *Felis yagouaroundi cacomitli, F. y. fossata, F. y. panamensis,* and *F. y. tolteca*).	do	Approved.
Panthera tigris altaica (Siberian tiger)	Transfer from II to I	do	Do.
Order Pinnipedia:			
Odobenus rosmarus (Walrus)	Add to II	Netherlands	Withdrawn.
Order Sirenia:			
Trichecus senegalensis (West African manatee).	Remove from II or transfer from II to I	Switzerland, Switzerland	Withdrawn, Withdrawn.
Order Artiodactyla:			
Catagonus wagneri (Chacoan or giant peccary).	Add to I	Paraguay	Approved.
Pudu mephistophiles (Northern pudu)	Remove from II	Switzerland	Withdrawn.
Tayassu spp. (Peccary)	Add to II (except populations in the United States).	Peru	Approved.
Vicugna vicugna (Vicuna)	Transfer of part of the population of Paranicota Province, Ia. Region of Tarapaca from I to II (under special conditions including export of cloth only).	Chile	Do.
Vicugna vicugna (Vicuna)	Transfer of the populations of Pampa Galeras National Reserve and Nuclear Zone, Pedregal, Oscconta and Sawacocha (Province of Lucanas), Sais Picotani (Province of Azangaro), Sais Tupaç Amaru (Province of Junin), and of Salinas Aguada Blanca National Reserve (provinces of Arequipa and Cailloma) from I to II (under specific conditions including export of cloth only).	Peru	Do.
BIRDS			
Order Ciconiiformes:			
Balaeniceps rex (Whale-headed stork)	Add to II	Netherlands	Do.
Eudocimus ruber (Scarlet ibis)	Add to I	France	Merged with Suriname proposal for App. II.
Eudocimus ruber (Scarlet ibis)	Add to II	Suriname	Approved.
Mycteria cinerea (Milky wood stork)	Add to I	Malaysia	Do.
Order Anseriformes:			
Anas bernieri (Madagascan teal)	Remove from II	Switzerland	Withdrawn.
Order Galliformes:			
Francolinus ochropectus (Djibouti francolin).	do	do	Do.
Francolinus swierstrai (Swierstra's francolin).	do	do	Do.
Megapodius freycinet abbotti (Abbott's megapode).	do	do	Approved.
Megapodius freycinet nicobariensis (Nicobar megapode).	do	do	Do.
Tetrao mlokosiewiczi (Caucasian black grouse).	do	do	Do.
Rheinartia ocellata (Crested argus pheasant).	Add to I	Malaysia	Do.
Order Gruiformes:			
Otididae spp. (Bustards)	Add to II (all species not already on appendices).	United Kingdom	Do.
Pedionomus torquatus (Plains wanderer)	Remove from II	Switzerland	Withdrawn.
Order Charadriformes:			
Larus brunnicephalus (Brown-headed gull)	do	do	Approved.
Numenius minutus (Little whimbre)	do	do	Do.
Order Psittaciformes:			
Anodorhynchus hyacinthinus (Hyacinth macaw).	Transfer from II to I	Brazil	Do.
Ara militaris (Military macaw)	do	Argentina	Do.
Probosciger aterrimus (Palm cockatoo)	do	Papua New Guinea	Do.

Species	Proposed amendment	Proponent	Final decision of the parties
Order Apdiformes:			
Trochilidae spp. (Hummingbirds)	Add to II	Ecuador	Do.
Order Piciformes:			
Picus squamatus flavirostris (Common scaly-bellied woodpecker).	Remove from II	Switzerland	Do.
Order Passeriformes:			
Meliphaga cassidix (=Lichenostomus melanops cassidix) (Helmeted honeyeater).	Remove from I	Australia	Withdrawn.
Psophodes nigrogularis (Western whipbird)	Remove from II	Australia, Switzerland	Approved.
Pitta brachyura numpha (Fairy pitta)	do	Switzerland	Rejected.
Pseudochelidon sirintarae (White-eyed river martin).	do	do	Withdrawn.
Niltave ruecki (Rueck's blue flycatcher)	do	do	Do.
Carduelis yarrelli (Yarrell's siskin)	do	do	Do.
Emblema oculata (Red-eared firetail finch)	do	do	Approved.
Gubernatrix cristata (Yellow cardinal)	Add to II	Argentina	Do.
Paroaria capitata (Yellow-billed cardinal)	do	do	Do.
Paroaria coronata (Red-Crested Cardinal)	do	do	Do.
REPTILIA			
Order Crocodylia:			
Crocodylus cataphractus (African slender-snouted crocodile).	Transfer of the Congolese population from I to II, subject to an annual export quota [2].	Republic of Congo	Approved.[2]
Crocodylus niloticus (Nile crocodile)	Maintenance of the population of Botswana in II, subject to an annual export quota [3].	Botswana	Approved.[3]
	Maintenance of the Cameroonian population in II, subject to an annual export quota [3].	Cameroon	Approved.[3]
	Maintenance of the Congolese population in II, subject to an annual export quota [3].	Republic of Congo	Approved.[3]
	Maintenance of the Kenyan population in II, subject to an annual export quota [3].	Kenya	Approved.[3]
	Maintenance of the Malagasy population in II, subject to an annual export quota [3].	Madagascar	Approved.[3]
	Maintenance of the Malawian population in II, subject to an annual export quota [4].	Malawi	Approved.[4]
	Maintenance of the population of Mozambique in II, subject to an annual export quota [4].	Mozambique	Approved.[4]
	Maintenance of the Sudanese population in II, subject to an annual export quota [3].	Sudan	Approved.[3]
	Maintenance of the Tanzanian population in II, subject to an annual export quota [3].	Tanzania	Approved.[3]
	Maintenance of the Zambian population in II, subject to an annual export of quota [4].	Zambia	Approved.[4]
Crocodylus niloticus (Nile crocodile)	Transfer of the populations of Botswana, Cameroon, Congo, Kenya, Madagascar, Malawi, Mozambique, Sudan, United Republic of Tanzania and Zambia from II to I.	Switzerland	Withdrawn.
Crocodylus porosus (Saltwater crocodile)	Retention of the Indonesian population in II subject to an annual export quota [5].	Indonesia	Approved.[5]
	Transfer of the population of Indonesia from II to I.	Switzerland	Withdrawn.
Osteolaemus tetraspis (Dwarf crocodile)	Transfer of the Congolese population from I to II, subject to an annual export quota [2].	Republic of Congo	Approved.[2]
Order Testudinata:			
Chelonia mydas (Green sea turtle)	Transfer of the populations of Europa and Tromelin Islands from I to II (ranching proposal).	France	Rejected.
Chelonia mydas (Green sea turtle)	Transfer of the Indonesian population from I to II.	Indonesia	Withdrawn.
Eretmochelys imbricata (Hawksbill sea turtle).	Transfer of the Indonesian population from I to II.	Indonesia	Do.
Clemmys muhlengergii (Bog turtle)	Remove from II	Switzerland	Do.
Order Squamata:			
Boa constrictor occidentalis (Argentine boa constrictor).	Transfer from II to I	Uruguay	Approved.
Gallotia aff. simonyi (Hierro giant lizard)	Add to I	Spain	Do.
Paradelma orientalis (Flap-footed legless lizard).	Remove from II	Australia, Switzerland	Do.
Phrynosoma coronatum blainvillei (San Diego horned lizard).	Remove from II	Switzerland	Withdrawn.
Podarcis lilfordi (Lilford's wall lizard)	Add to II	Spain	Approved.
Podarcis pityusensis (Ibiza wall lizard)	do	do	Do.
Thamnophis couchi hammondi (Two-striped garter snake).	Remove from II	Switzerland	Do.

Species	Proposed amendment	Proponent	Final decision of the parties
Vipera ursinii (Orsini's viper)	Add to I (except populations in the U.S.S.R.)	France, Italy	Do.
AMPHIBIANS			
Order Caudata:			
Ambystoma lermaense (Lake Lerma salamander).	Remove from II	Switzerland	Do.
Order Anura:			
Dendrobates altobueyensis (Golden poison-arrow frog).	Add to I	Netherlands	Rejected.
Dendrobates spp. (Poison-dart frogs)	Add to II	Suriname	Approved.
Dyscophus antongili (Tomato frog)	Add to I	Netherlands	Do.
Mantella aurantiaca (Golden frog)	do	do	Rejected.
Phyllobates spp. (Poison-arrow frogs)	Add to II	do	Approved.
FISH			
Order Osteoglossiformes:			
Scleropages formosus (Asian bonytongue)	Transfer of the Indonesian population from I to II.	Indonesia	Withdrawn.
Order Coelacanthiformes:			
Latimeria chalumnae (Coelacanth)	Remove from II	Switzerland	Do.
Order Salmoniformes:			
Salmo chrysogaster (Mexican golden trout)	do	do	Approved.
Stenodus leucichtys leucichthys (White salmon).	do	do	Do.
Order Cypriniformes:			
Caecobarbus geertsi (African blind barb fish).	do	do	Not considered.
Plagopterus argentissimus (Woundfin)	do	do	Approved.
Ptychocheilus lucius (Colorado River squawfish).	do	do	Do.
Order Atheriniformes:			
Cynolebias constanciae (Pearl fishes)	do	do	Withdrawn.
Cynolebias marmoratus (Pearl fishes)	do	do	Do.
Cynolebias minimus (Pearl fishes)	do	do	Do.
Cynolebias opalescens (Pearl fishes)	do	do	Do.
Cynolebias splendens (Pearl fishes)	do	do	Do.
Xiphophorus couchianus (Monterrey platyfish).	do	do	Approved.
MOLLUSCS			
Class Pelecypoda (=Bivalvia)			
Choromytilus (=Mytilus chorus) Choro)	do	do	Do.
Cyprogenia aberti (Pearly mussels)	do	do	Withdrawn.
Epioblasma torulosa rangiana (Pearly mussels).	do	do	Do.
Fusconaia subrotunda (Pearly mussels)	do	do	Do.
Lampsilis brevicula (Pearly mussels)	do	do	Do.
Lexingtonia dolabelloides (Pearly mussels)	do	do	Do.
Pleurobema clava (Pearly mussels)	do	do	Do
Class Gastropoda:			
Achatinella spp. (Oahu tree snails)	Add to I	Netherlands	Approved.
Paryphanta spp.	Remove from II	Switzerland	Withdrawn.
Coahuilix hubbsii (Cuatro Cienegas snails)	do	do	Approved.
Cochiliopina milleri (Cuatro Cienegas snails).	do	do	Do.
Durangonella coahuilae (Cuatro Cienegas snails).	do	do	Do.
Mexipyrgus carranzae (Cuatro Cienegas snails).	do	do	Do.
Mexipyrgus churinceanus (Cuatro Cienegas snails).	do	do	Do.
Mexipyrgus escobedae (Cuatro Cienegas snails).	do	do	Do.
Mexipyrgus lugoi (Cuatro Cienegas snails)	do	do	Do.
Mexipyrgus mojarralis (Cuatro Cienegas snails).	do	do	Do.
Mexipyrgus multilineatus (Cuatro Cienegas snails).	do	do	Do.
Mexithauma quadripaludium (Cuatro Cienegas snails).	do	do	Do.
Nymphophilus minckleyi (Cuatro Cienegas snails).	do	do	Do.
Paludiscala caramba (Cuatro Cienegas snails).	do	do	Do.

Species	Proposed amendment	Proponent	Final decision of the parties
INSECTS			
Class Insecta:			
Bhutanitis spp. (Bhutan Glory swallowtails)	Add to II	United Kingdom	Do.
Ornithoptera alexandrae (Queen Alexandra's birdwing butterfly).	Transfer from II to I	do	Do.
Papilio chikae (Luzon peacock swallowtail)	Add to I	do	Do.
Papilio homerus (Homerus swallowtail)	do	do	Do.
Papilio hospiton (Corsican swallowtail)	do	do	Do.
Teinopalpus spp. (Kaiser-I-Hind butterflies)	Add to II	do	Do.
FLAT WORMS			
Order Hirudinea:			
Hirundo medicinalis (Medicinal leech)	do	do	Do.
CORALS			
Class Anthozoa:			
Corallium rubrum (Precious red coral)	do	Spain	Rejected.
PLANTS			
Family Cactaceae:			
Astrophytum (=Echinocactus) asterias (Sea urchin or star cactus).	Transfer from II to I	United Kingdom	Approved.
Family Compositae (=Asteraceae)			
Saussurea lappa (Costus or Kuth root)	Transfer from I to II	Pakistan	Rejected.
Family Cupressaceae:			
Fitz-Roya cupressoides (Alerce or Fitz-roya).	Transfer of the coastal population of Chile from II to I.	Argentina	Approved.
Family Cycadaceae:			
Cycas beddomei (Beddome cycad)	Transfer from II to I	India	Do.
Family Liliaceae:			
Iphigenia stellata (Starry iphigenia)	Add to II	do	Withdrawn.
Family Nepenthaceae:			
Nepenthes khasiana (Indian tropical pitcher plant).	Add to I	do	Approved.
Nepenthes spp. (Tropical pitcher plants)	Add to II (all species not already on an appendix).	Malaysia	Do.
Family Orchidaceae:			
Dendrobium pauciflorum (Few-flowered dendrobium).	Transfer from II to I	India	Withdrawn.
Paphiopedilum druryi (Drury tropical lady's slipper).	do	do	Approved.
Family Palmae (=Arecaceae):			
Chrysalidocarpus lutescens (Areca palm)	Remove from II	Netherlands	Do.
Family Sarraceniaceae:			
Sarracenia spp. and natural hybrids (all species and natural hybrids in the genus except those in App. I).	Add to II	United States	Do.

[1] Export permit would be required only for dead specimens inasmuch as the trade in live specimens involves several other unlisted species, is limited, and not viewed as a threat to the survival of the Pacific Island populations.

[2] Export quotas of 600 and 500 for *Crocodylus cataphractus* and *Osteloaemus tetrospis,* respectively, were approved for populations in the Congo for 1987 to 1989.

[3] Export quotas for 1987 to 1989 were approved for *Crocodlylus niloticus* populations in the following countries (with annual quota shown in parenthesis): Botswana (2,000), Cameroon (100), Congo (150), Kenya (5,000 of which only 1,000 will be removed directly from the wild), Madagascar (1,000), Sudan (5,000), Tanzania (2,000).

[4] Export quotas as shown in parentheses, were approved for *Crocodylus niloticus* populations in the following countries (with the quotas for the year 1987, 1988, and 1989, respectively given in parentheses): Malawi (900, 1,000 and 1,300), Mozambique (1,000, 1,000 and 4,000), and Zambia (3,350, 5,600, and 8,200 of which only 2,000 will be removed directly from the wild each year).

[5] Export quota of 4,000 was approved for the population of *Crocodylus porosus* in Indonesia.

All proposals in the preceding table that were approved by the Conference of the Parties will enter into effect 90 days after the meeting (i.e., on October 22, 1987).

Article XV of CITES enables any Party to exempt itself from implementing CITES for any particular species if it enters a reservation with respect to that species. In the case of of a nation that is a Party at the time an amendment is adopted, a reservation may be entered only during the period of 90 days after the Parties voted to place the species in Appendix I or II.

Reserving may do little to relieve importers in the United States from the need for foreign export permits because the Lacey Act Amendments of 1981 (16 U.S.C. 3371 et seq.) make it a Federal offense to import into the United States any animals taken, possessed, transported, or sold in violation of foreign conservation laws. If the foreign nation has enacted the Convention as part of its positive law, and that nation has not taken a reservation with regard to the species, part, or derivative, the United States would continue to require Convention documents as a condition of import. A reservation by the United States also might provide exporters in this country with little relief from the need for U.S. export documents. Receiving countries that are party to the Convention will generally require Convention-equivalent documentation from the United States if it enters a reservation, because the Parties have

agreed to allow trade with non-Parties (including reserving Parties) only if they issue documents containing all of the information required in Convention permits or certificates. In addition, reservations on species listed on Appendix I should be treated by the reserving Party as on Appendix II according to Conference resolution 4.25, thereby requiring Convention documents for export of these species to Parties and non-Parties alike.

The Service requests comments on whether it should recommend that the United States enter a reservation on any of the recent amendments. At present, the Service proposes not to recommend any reservations. It would do so only if evidence is presented to show that implementation of the amendment would be contrary to the interests or law of the United States.

Note: The Department has determined that amendments to CITES Appendices, which result from actions of the Parties to the Convention, do not require the preparation of Environment Assessments as defined under authority of the National Environmental Policy Act (42 U.S.C. 4321 through 4347), 516 DM 2, Appendix I, section 1.10. The Department also has determined that this listing action is not a rule for purposes of Executive Order 12291, and that the Regulatory Flexibility Act (5 U.S.C. 601) does not apply to this listing process. This rule does not contain information collection requirements which require approval by the Office of Management and Budget under 44 U.S.C. 3501 et seq.

List of Subjects in 50 CFR Part 23

Endangered and threatened plants, Endangered and threatened wildlife, Exports, Fish, Imports, Marine mammals, Plants (agriculture), Treaties.

This document is issued under authority of the Endangered Species Act of 1973 (16 U.S.C. 1531 et seq.; 87 Stat. 884, as amended). It was prepared by Drs. Charles W. Dane and Bruce MacBryde, Office of Scientific Authority.

Proposed Regulations Promulgation

The Service proposes to amend the list of species contained in § 23.23 of Title 50 of the Code of Federal Regulations by incorporating all changes in CITES Appendices I and II that were approved by the Conference of the Parties, as set forth in the supporting statement of the present notice.

Dated: September 16, 1987.

Susan Recce,

Acting Assistant Secretary for Fish and Wildlife and Parks.

[FR Doc. 87-21849 Filed 9-22-87; 8:45 am]

BILLING CODE 4310-55-M

Notices

Federal Register
Vol. 52, No. 184
Wednesday, September 23, 1987

This section of the FEDERAL REGISTER contains documents other than rules or proposed rules that are applicable to the public. Notices of hearings and investigations, committee meetings, agency decisions and rulings, delegations of authority, filing of petitions and applications and agency statements of organization and functions are examples of documents appearing in this section.

DEPARTMENT OF AGRICULTURE

Forms Under Review by Office of Management and Budget

September 18, 1987.

The Department of Agriculture has submitted to OMB for review the following proposals for the collection of information under the provisions of the Paperwork Reduction Act (44 U.S.C. Chapter 35) since the last list was published. This list is grouped into new proposals, revisions, extensions, or reinstatements. Each entry contains the following information.

(1) Agency proposing the information collection; (2) Title of the information collection; (3) Form number(s), if applicable; (4) How often the information is requested; (5) Who will be required or asked to report; (6) An estimate of the number of responses; (7) An estimate of the total number of hours needed to provide the information; (8) An indication of whether section 3504(h) of Pub. L. 96-511 applies; (9) Name and telephone number of the agency contact person.

Questions about the items in the listing should be directed to the agency person named at the end of each entry. Copies of the proposed forms and supporting documents may be obtained from: Department Clearance Officer, USDA, OIRM, Room 404-W Admin. Bldg., Washington, DC 20205, (202) 447-2118.

Comments on any of the items listed should be submitted directly to: Office of Information and Regulatory Affairs, Office of Management and Budget, Washington, DC 20503, Attn: Desk Officer for USDA.

If you anticipate commenting on a submission but find that preparation time will prevent you from doing so promptly, you should advise the OMB Desk Officer of your intent as early as possible.

New

- Agricultural Cooperative Service
  Marketing Operations of Dairy Cooperatives
  On occasion
  Businesses or other for-profit; Small businesses or organizations; 380 responses; 340 hours; not applicable under 3504(h)
  James B. Roof, (202) 653-6620

Revision

- Agricultural Stabilization and Conservation Service
  7 CFR Parts 724, 725, and 726
  MQ-79 and MQ-79 (Supplemental)
  Weekly
  Businesses or other for-profit; 10,000 responses; 2,500 hours; not applicable under 3504(h)
  Sarah J. Matthews, (202) 475-5012
- Food and Nutrition Service
  Civil Rights Title VI Collection Reports
  FNS 191 and 101
  Annually
  State or local governments; 4,711 responses; 13,709 hours; not applicable under 3504(h)
  Maxine McMillian, (703) 756-3710

Larry K. Roberson,
Acting Departmental Clearance Officer.
[FR Doc. 87-21935 Filed 9-22-87; 8:45 am]
BILLING CODE 3410-01-M

Federal Grain Inspection Service

Advisory Committee Meeting

Pursuant to the provisions of section 10(a)(2) of the Federal Advisory Committee Act (Pub. L. 92-463), a notice is hereby given of the following committee meeting:

Name: Federal Grain Inspection Service Advisory Committee.
Date: October 15, 1987.
Place: Capitol Holiday Inn, 500 C Street, SW., Washington, DC 20024.
Time: 8:30 a.m.
Purpose: To provide advice to the Administrator of the Federal Grain Inspection Service on the efficient and economical implementation of the U.S. Grain Standards Act of 1976 and to assure the normal movement of grain in an orderly and timely manner.

The agenda includes: (1) Sorghum Subcommittee report; (2) financial matters; (3) Insect Interagency Task Force report; (4) deceptive practices; (5) foreign complaints; and (6) other matters.

The meeting will be open to the public. Public participation will be limited to written statements unless otherwise requested by the Committee Chairman. Persons, other than members, who wish to address the Committee at the meeting or submit written statements before or at the meeting should contact W. Kirk Miller, Administrator, FGIS, U.S. Department of Agriculture, P.O. Box 96454, Washington, DC 20090-6454, telephone (202) 382-0219.

Dated: September 18, 1987.

W. Kirk Miller,
Administrator.
[FR Doc. 87-21936 Filed 9-22-87; 8:45 am]
BILLING CODE 3410-EN-M

Soil Conservation Service

Critical Area Treatment RC&D Measure; West Montgomery County, TX

AGENCY: Soil Conservation Service, USDA.

ACTION: Notice of a finding of no significant impact.

SUMMARY: Pursuant to section 102(2)(C) of the National Environmental Policy Act of 1969; the Council on Environmental Quality Guidelines (40 CFR Part 1500); and the Soil Conservation Service, Guidelines (7 CFR Part 650); the Soil Conservation Service, U.S. Department of Agriculture gives notice that an environmental impact statement is not being prepared for the West Montgomery County Critical Area Treatment RC&D Measure, Montgomery County, Texas.

FOR FURTHER INFORMATION CONTACT: Coy A. Garrett, State Conservationist, Soil Conservation Service, W.R. Poage Federal Building, 101 South Main, Temple, Texas, 76501, Telephone 817-774-1214.

SUPPLEMENTARY INFORMATION: The environmental assessment of this federally assisted action indicates that the project will not cause significant local, regional, or national impacts on the environment. As a result of these findings, Coy A. Garrett, State Conservationist, has determined that the preparation and review of an environmental impact statement are not needed for this project.

The measure concerns a plan for critical area treatment on seven eroded areas in western Montgomery County. Planned treatment consists of installing

grade stabilization structures on seven of the sites. These will be installed on private property. These areas will be established to permanent vegetative cover when completed. The areas will be fenced where necessary to protect and manage the vegetation. This will be fenced where necessary to protect and manage the vegetation. This will involve 100 acres of gullied pastureland.

The Notice of a Finding of No Significant Impact (FONSI) has been forwarded to the Environmental Protection Agency and to various Federal, State, and local agencies and interested parties. A limited number of copies of the FONSI are available to fill single copy requests at the above address. Basic data developed during the environmental assessment are on file and may be reviewed by contacting Coy A. Garrett.

No administrative action on implementation of the proposal will be taken until 30 days after the date of this publication in the **Federal Register**.

O. Dale Fischgrabe,

Deputy State Conservationist.

Date: September 4, 1987.

(Catalog of Federal Domestic Assistance Program No. 10.901, Resource Conservation and Development Program. Executive Order 12372 regarding State and local clearinghouse review of Federal and federally assisted programs and projects is applicable.)

[FR Doc. 87-21895 Filed 9-22-87; 8:45 am]

BILLING CODE 3410-16-M

DEPARTMENT OF COMMERCE

International Trade Administration

[A-588-607]

Antidumping Duty Order; Amorphous Silica Filament Fabric From Japan

AGENCY: International Trade Administration, Import Administration, Department of Commerce.

ACTION: Notice.

SUMMARY: In the investigation concerning amorphous silica filament fabric from Japan, the United States Department of Commerce (the Department) and the United States International Trade Commission (the ITC) have determined that amorphous silica filament fabric from Japan is being sold at less than fair value and that sales of amorphous silica filament fabric from Japan are materially injuring a United States industry. The ITC ruled that critical circumstances do not exist.

Therefore, based on these findings, we will discontinue suspension of liquidation of all entries 90 days prior to our preliminary determination. Suspension of liquidation will begin for all unliquidated entries, or warehouse withdrawals, for consumption of amorphous silica filament fabric from Japan made on or after May 13, 1987, the date on which the Department published its preliminary determination notice in the **Federal Register**. These entries will be liable for the assessment of antidumping duties. Furthermore, a cash deposit of estimated antidumping duties must be made on all such entries, and withdrawals from warehouse, for consumption on or after the date of publication of this antidumping duty order in the **Federal Register**.

EFFECTIVE DATE: September 23, 1987.

FOR FURTHER INFORMATION CONTACT: Charles Wilson, (202) 377-5288 or Nancy Saeed, (202) 377-1777, Office of Investigations, International Trade Administration, United States Department of Commerce, 14th Street and Constitution Avenue, NW., Washington, DC 20230.

SUPPLEMENTARY INFORMATION: The product covered by this investigation is certain commercial grade woven fabric of glass (silica filaments), whether or not colored, containing not over 17 percent of wool by weight, as currently classified under *Tariff Schedules of the United States* (TSUS) item numbers 338.25 and 338.27.

In accordance with section 733 of the Tariff Act of 1930, as amended (the Act) (19 U.S.C. 1673b), on May 6, 1987, the Department made its preliminary determination that there was reason to believe or suspect that amorphous silica filament fabric from Japan was being sold at less than fair value (52 FR 17997, May 13, 1987). On July 20, 1987, the Department made its final determination that these imports were being sold at less than fair value (52 FR 28033, July 27, 1987) and that critical circumstances did exist.

On September 9, 1987, in accordance with section 735(d) of the Act (19 U.S.C. 1673d(d)), the ITC notified the Department that such imports materially injure a United States industry and that critical circumstances do not exist.

Therefore, in accordance with sections 736 of the Act (19 U.S.C. 1673e), the Department directs United States Customs officers to assess, upon further advice by the administering authority pursuant to section 736(a)(1) of the Act (19 U.S.C. 1673e(a)(1)), antidumping duties equal to the amount by which the foreign market value of the merchandise exceeds the United States price for all entries of amorphous silica filament fabric from Japan. These antidumping duties will be assessed on all unliquidated entries of amorphous silica filament fabric entered, or withdrawn from warehouse, for consumption on or after May 13, 1987, the date on which the Department published its preliminary determination.

On and after the date of publication of this notice, United States Customs officers must require, at the same time as importers would normally deposit estimated duties on this merchandise, a cash deposit equal to the estimated weighted-average antidumping duty margin of 193.94 percent.

This determination constitutes an antidumping duty order with respect to amorphous silica filament fabric from Japan, pursuant to section 736 of the Act (19 U.S.C. 1673e) and 19 CFR 353.48.

We have deleted Annex I of 19 CFR Part 353, which listed antidumping duty findings and orders currently in effect, from the Commerce Regulations. Instead, interested parties may contact the Central Records Unit, Room B-099, Import Administration, for copies of the updated list of orders currently in effect.

This notice is published in accordance with section 736 of the Act (19 U.S.C. 1673e) and § 353.48 of the Commerce Regulations (19 CFR 353.48).

Gilbert B. Kaplan,

Deputy Assistant Secretary for Import Administration.

September 16, 1987.

[FR Doc. 87-21943 Filed 9-22-87; 8:45 am]

BILLING CODE 3510-DS-M

[A 428-602]

Final Determination of Sales at Less Than Fair Value and Amendment to Antidumping Duty Order; Brass Sheet and Strip From the Federal Republic of Germany

AGENCY: International Trade Administration, Import Administration, Department of Commerce.

ACTION: Notice.

SUMMARY: As a result of correction of clerical errors, the Department of Commerce (the Department) is amending its final determination in this investigation and its antidumping order and is directing the U.S. Customs Service to adjust the cash deposit rates as follows:

Manufacturer/producer exporter	Weighted-average margin percentage	
	Final	Amended final
Wieland-Werke AG	5.31	3.81
Langenberg Kupfer-und Messingwerke Gmbh	15.94	16.18
All others	8.87	7.30

These corrections are made pursuant to remand orders from the Court of International Trade (CIT), dated August 5 and 8, 1987, in the cases challenging the final determination on brass sheet and strip from the Federal Republic of Germany, *Weiland-Werke AG v United States*, Court No. 87-04-00575 and *American Brass v United States*, Court No. 87-04-00589.

EFFECTIVE DATE: September 23, 1987.

FOR FURTHER INFORMATION CONTACT: John Brinkmann, (202-377-3965), Office of Investigations, Import Administration, International Trade Administration, Department of Commerce, 14th Street and Constitution Avenue, NW., Washington, DC 20230.

SUPPLEMENTARY INFORMATION:

Background

On January 5, 1987, in accordance with section 735 of the Tariff Act of 1930, as amended (the Act) (19 U.S.C. 1673d), the Department made its final determination that imports of brass sheet and strip from the Federal Republic of Germany were being sold at less than fair value (52 FR 822, January 9, 1987).

On February 19, 1987, in accordance with section 735(d) of the Act (19 U.S.C. 1673d(d)), the ITC notified the Department of its determination that an industry in the United States is materially injured by imports of brass sheet and strip from the Federal Republic of Germany. On March 6, 1987, pursuant to section 736 of the Act (19 U.S.C. 1673e), the Department published an antidumping duty order on brass sheet and strip from the Federal Republic of Germany (52 FR 6997, March 6, 1987).

The results of the Department's final determination were challenged in the CIT by the petitioner, American Brass, et al., and the respondents, Wieland-Werke AG, et al. Pursuant to a motion by the Department for a remand to correct certain clerical errors in its final determination, the CIT, on August 5, 1987, in *Wieland-Werke AG v United States*, and on August 8, 1987 in *American Brass v United States*, remanded the investigation to the Department for correction of these clerical errors.

Remand Results

Pursuant to the remand, the Department corrected the clerical errors listed in the Department's remand request. The clerical errors and corrections made are as follows:

(1) The home market, purchase price, and exporter's sales price data bases for Metallwerke Schwarzwald, a wholly-owned subsidiary of Wieland Werke AG (Wieland), were inadvertently excluded from Wieland's data bases. The two data bases have been merged in the revised final determination.

(2) A typographical error in the instruction in line 144 for calculating foreign market value for Wieland caused a price-based quantity discount rather than a cost-based quantity discount to be deducted. We have corrected the error and have made the cost-based quantity discount intended in the final determination.

(3) Adjustments for certain physical differences were not deducted in Wieland's pruchase price and exporter's sales price programs. The physical difference in merchandise adjustments have been made in both programs.

(4) Line 109 of Wieland's exporter's sales price program reflects an error in the calculation of packing costs. This error has been corrected.

(5) An improper exchange rate was used to convert foreign market value into U.S. dollars on a number of sales comparisons during the fourth quarter of 1985 for both Wieland and Langenberg Kupfer-und Messingwerke Gmbh (Langenberg). The exchange rate used in the program for this period has been corrected to reflect the appropriate Federal Reserve exchange rate.

(6) Line 229 of the computer program for Langenberg contains a command regarding a special credit for after-sale financing. Originally we thought that a typographical error had caused miscalculation of the adjustment. Upon further review, we determined that the original command was correct and that the adjustment was not miscalculated; consequently, we have made no correction.

(7) Line 167 of the computer program for Langenberg contains a transmission error causing all sales to be deleted from the home market data base for which the date of conversion pricing and the date of metal pricing both fall within the period of investigation. We have corrected the computer program to include such sales in the home market data base.

Suspension of Liquidation

Pursuant to the remand order, the final determination and antidumping duty order on brass sheet and strip from the Federal Republic of Germany are amended to incorporate the changes in the calculations as set forth above. Accordingly, the Department will advise the U.S. Customs Service to adjust the cash deposit rates, on or after the date of the publication of this notice in the **Federal Register** as follows:

Manufacturer/producer exporter	Weighted-average margin percentage	
	Final	Amended final
Wieland-Werke AG	5.31	3.81
Langenberg Kupfer-und Messingwerke Gmbh	15.94	16.18
All others	8.87	7.30

Gilbery B. Kaplan,

Deputy Assistant Secretary for Import Administration.

September 18, 1987.

[FR Doc. 87-21944 Filed 9-22-87; 8:45 am]

BILLING CODE 3510-DS-M

[A-428-604]

Amendment to Final Determination and Antidumping Duty Order; Certain Forged Steel Crankshafts From the Federal Republic of Germany

AGENCY: Import Administration, International Trade Administration, Department of Commerce.

ACTION: Notice.

SUMMARY: In separate investigations concerning certain forged steel crankshafts (CFSC) from the Federal Republic of Germany (FRG), the U.S. Department of Commerce (the Department) and the U.S. International Trade Commission (ITC) determined that CFSC from the FRG are being sold at less than fair value and that imports of CFSC from the FRG are materially injuring a U.S. industry. One manufacturer, Gerlach-Werke GmbH, exported its CFSC to the United States at prices which were determined to be not at less than fair value. The antidumping duties required by this order will not be imposed on that company.

Therefore, based on these findings, all unliquidated entries of CFSC from the FRG, except for CFSC manufactured by Gerlach-Werke GmbH, which were entered, or withdrawn from warehouse, for consumption on or after May 13, 1987, the date on which the Department published its "Preliminary Determination" notice in the **Federal Register**, will be liable for the possible assessment of antidumping duties. Further, a cash deposit of estimated antidumping duties must be made on all such entries, and withdrawals from warehouse, for consumption made on or after the date of publication of this antidumping duty order in the **Federal Register**.

In addition, because of a clerical error, we are amending our final determination in this investigation and

directing the U.S. Customs Service to adjust the cash deposit rates as follows:

Manufacturer, producer, exporter	From	To
Thyssen Umformtechnik	2.02	1.90
All others	2.02	1.90

EFFECTIVE DATE: September 23, 1987.

FOR FURTHER INFORMATION CONTACT: Steven Morrison, Office of Investigations, or William Matthews, Office of Compliance, 377-0189 or 377-3601, Import Administration, International Trade Administration, U.S. Department of Commerce, 14th Street and Constitution Avenue, NW., Washington, DC 20230.

SUPPLEMENTARY INFORMATION: The products covered by this investigation are forged carbon or alloy steel crankshafts with a shipping weight between 40 and 750 pounds, whether machined or unmachined. These products are currently classified under items 660.6713, 660.6727, 660.6747, 660.7113, 660.7127 and 660.7147 of the *Tariff Schedules of the United States Annotated* (TSUSA). Neither cast crankshafts nor forged crankshafts with shipping weights of less than 40 pounds or greater than 750 pounds are subject to this investigation.

In accordance with section 733 of the Tariff Act of 1930, as amended (the Act) (19 U.S.C. 1673b), on May 7, 1987, the Department made its preliminary determination that there was reason to believe or suspect that CFSC from the FRG were being sold at less than fair value, except for CFSC manufactured by Gerlache-Werke GmbH, (52 FR 18002, May 13, 1987). On July 21, 1987, the Department made its final determination that these imports are being sold at less than fair value, except for CFSC manufactured by Gerlach-Werke GmbH (52 FR 28170, July 28, 1987).

On September 9, 1987, in accordance with section 735(d) of the Act (19 U.S.C. 1673d(d)), the ITC notified the Department that such imports are materially injuring a U.S. industry.

In addition, subsequent to the publication of the final determination, respondent Thyssen Umformtechnik identified a clerical error in our calculations. We have correcterd this error and are consequently amending our final determination by changing the weighted-average margins.

Accordingly, the cash deposit rates in the "Suspension of Liquidation" section of the final determination are amended to read as follows:

Manufacturer, producer, exporter	From	To
Thyssen Umformtechnik	2.02	1.90
All others	2.02	1.90

Therefore, in accordance with sections 736 and 751 of the Act (19 U.S.C. 1673e and 1675), the Department directs U.S. Customs officers to assess, upon further advice by the administering authority pursuant to section 736(a)(1) of the Act (19 U.S.C. 1673e(a)(1)), antidumping duties equal to the amount by which the foreign market value of the merchandise exceeds the United States price for all entries of CFSC from the FRG, except for CFSC manufactured by Gerlach-Werke GmbH. These antidumping duties will be assessed on all unliquidated entries of CFSC from the FRG, except for CFSC manufactured by Gerlach-Werke GmbH, entered, or withdrawn from warehouse, for consumption on or after May 13, 1987, the date on which the Department published its "Preliminary Determination" notice in the **Federal Register.**

On and after the date of publication of this notice, U.S. Customs officers must require, at the same time as importers would normally deposit estimated duties on this merchandise, a chase deposit of 1.90 percent, equal to the estimated weighted-average antidumping duty margin, except for CFSC manufactured by Gerlach-Werke GmbH.

This determination constitutes an amendment to the final determination and an antidumping duty order with respect to CFSC from the FRG, pursuant to section 735 and 736 of the Act (19 U.S.C. 1673d and 1673e) and § 353.48 of the Commerce Regulations (19 CFR 353.48). We have deleted from the Commerce Regulations, Annex I of 19 CFR part 353, which listed antidumping duty findings and orders currently in effect.

Instead, interested parties may contact the Central Records Unit, Room B-099, Import Administration, for copies of the updated list of orders currently in effect.

Notice of Review

In accordance with section 751(a)(1) of the Act (19 U.S.C. 1675(a)(1)), the Department hereby gives notice that, if requested, it will commence an administrative review of this order. For further information regarding this review, contact William Matthews at (202) 377-3601.

This notice is published in accordance with section 735(d) 736 of the Act (19 U.S.C. 1673(d) and 1673(e) and § 353.48 of the Commerce Regulations (19 CFR 353.48).

Gilbert B. Kaplan,

Deputy Assistant Secretary for Import Administration.

September 16, 1987.

[FR Doc. 87-21945 Filed 9-22-87; 8:45 am]

BILLING CODE 3510-DS-M

Export Trade Certificate of Review

AGENCY: International Trade Administration, Commerce.

ACTION: Notice of application.

SUMMARY: The Office of Export Trading Company Affairs, International Trade Administration, Department of Commerce, has received an application for an Export Trade Certificate of Review. This notice summarizes the conduct for which certification is sought and requests comments relevant to whether the Certificate should be issued.

FOR FURTHER INFORMATION CONTACT: George Muller, Acting Director, Office of Export Trading Company Affairs, International Trade Administration, 202/377-5131. This is not a toll-free number.

SUPPLEMENTARY INFORMATION: Title III of the Export Trading Company Act of 1982 (Pub. L. 97-290) authorizes the Secretary of Commerce to issue Export Trade Certificates of Review. A Certificate of Review protects its holder and the members identified in it from private treble damage actions and from civil and criminal liability under Federal and state antitrust laws for the export conduct specified in the Certificate and carried out during its effective period in compliance with its terms and conditions. Section 302(b)(1) of the Act and 15 CFR 325.6(a) require the Secretary to publish a notice in the **Federal Register** identifying the applicant and summarizing its proposed export conduct.

Request for Public Comments

Interested parties may submit written comments relevant to the determination whether a Certificate should be issued. An original and five (5) copies should be submitted not later than 20 days after the date of this notice to: Office of Export Trading Company Affairs, International Trade Administration, Department of Commerce, Room 5618, Washington, DC 20230. Information submitted by any person is exempt from disclosure under the Freedom of Information Act (5 U.S.C. 552). Comments should refer to this application as "Export Trade Certificate

of Review, application number 87-00013" A summary of the application follows.

Co-applicants: Southeastern Fisheries Association, Inc.; Southeastern Fisheries Association, Inc., Export Trade Section, 312 East Georgia Street, Tallahassee, Florida 32301, Contact: Robert P. Jones, Exec. Dir., Telephone: (904) 224-0612.

Application #87-00013.

Date Deemed Submitted: September 8, 1987.

Members (in addition to co-applicants): Aylesworth Seafood Company, Inc.; Bayside Shellfish, Inc.; Clark Seafood Co., Inc.; J.O. Guthrie Fish Co., Inc.; and Raffield Fisheries, Inc.

Summary of the Application

A. Export Trade

Products

Fish and fish products, including, but not limited to, mullet, mullet roe, blue runners, thread herring, skipjack, menhaden, keoghfish, sardines, bonitas, black drum, shad, spots, and shrimp by-catch (i.e. fish caught incidental to shrimping).

Services

The co-applicants will provide or arrange for the provision of the following services to facilitate the export of Products: Consulting; international market research; advertising; marketing; insurance; product research and design, exclusively for export; legal assistance; transportation, including trade documentation and freight forwarding; communication and processing of foreign orders; financing; foreign exchange; warehousing, including a central storage freezer; quality control inspection; and taking title to the Products for export.

B. Export Markets

Worldwide.

C. Export Trade Activities and Methods of Operation

The co-applicants, Southeastern Fisheries Association, Inc. ("SFA"), its Export Trade Section ("ETS"), and the Members seek certification for the following activities:

1. The ETS and the Members may meet under the auspices of SFA to:

a. Establish export prices for individual Products on a geographical basis in the Export Markets;

b. Discuss the quality and quantity of Products that the Members are able to produce, including, but not limited to, levels of inventory available for export by the Members and geographic availability of fish to fill any actual or potential order;

c. Discuss export sales, marketing efforts, and any sales opportunities in the Export Markets for Products, including, but not limited to, export prices, selling strategies, sales, projected demand, standard terms of sale, financing, insurance, transportation, foreign competition, identification of potential customers, and customers' specifications; and

d. Discuss U.S. and Foreign legislation, regulations, and policies affecting export sales.

2. SFA may compile for, collect from, and disseminate to the Members for discussion as a group the export related information set forth in paragraph 1.

3. SFA may respond to export trade inquiries, invitations to bid, and other export sales opportunities on behalf of the ETS and the Members.

4. SFA may contact separately suppliers of Products that operate outside the ETS membership, and distribute to such suppliers separately information about the sales opportunities in the Export Markets, including, for example, bid requirements, bidding dates, and other pertinent information, in order that the individual suppliers can provide separately export quotations to SFA so that SFA may coordinate an SFA/ETS response to sales opportunities.

5. SFA may discuss with each supplier individually the price ETS will charge in the export markets for the supplier's Products.

6. ETS and the Members may combine Products for inspection under SFA's quality control program and store such Products for export in a central freezer.

7. SFA, ETS, and/or the Members may enter into exclusive and non-exclusive agreements with export intermediaries for sales in the export markets.

8. The management of the ETS will be under the overall direction of SFA'S Executive Director.

9. Membership in SFA's ETS shall be open to any member of SFA having an interest in the Export Trade that is legally eligible for such membership and that pays an assessment to join the Export Trade Section of Southeastern Fisheries Association in an amount of not less than $500 nor more than $5000 annually. Any Member of the ETS can withdraw its membership at any time by notifying the Chairman of the Board of Directors of the ETS in writing.

10. The Members will individually procure Products for export and sell such Products through the ETS on a voluntary basis.

Date: September 17, 1987.

George Muller,

Acting Director, Office of Export Trading Company Affairs.

[FR Doc. 87-21905 Filed 9-22-87; 8:45 am]

BILLING CODE 3510-DR-M

COMMODITY FUTURES TRADING COMMISSION

Advisory Committee on CFTC-State Cooperation; Meeting

This is give notice, pursuant to section 10(a) of the Federal Advisory Committee Act, 5 U.S.C. App. I, section 10(a), that the Commodity Futures Trading Commission's Advisory Committee on CFTC-State Cooperation will conduct a public meeting in the Fifth Floor Hearing Room at the Commission's Washington, DC, headquarters located at Room 532, 2033 K Street, NW., Washington, DC 20581, October 8, 1987, beginning at 9:00 a.m. and lasting until 4:00 p.m. The agenda will consist of:

Agenda

1. Opening Remarks—Kalo A. Hineman, Acting Chairman, CFTC; Fowler C. West, Commissioner, CFTC and Chairman, Advisory Committee on CFTC-State Cooperation;

2. Report by representatives of the American Newspaper Publishers Association Credit Bureau, Inc. on the status of the Bureau's efforts to disseminate educational material on commodity fraud to its subscribers;

3. Discussion of bank-financed precious metals programs;

4. Status report and discussion regarding the adoption of the NASAA Model State Commodity Code by the states and related issues;

5. Report on the National Futures Association's progress on the leverage survey mandated by the Futures Trading Act of 1986;

6. Report by the National Futures Association on its arbitration survey and other current arbitration issues;

7. Report on the activities of the San Diego Boiler Room Task Force; and

8. Discussion of other questions of concern to Advisory Committee members.

The Advisory Committee was created by the Commodity Futures Trading Commission for the purpose of receiving advice and recommendations on matters of joint concern to the States and the Commission arising under the Commodity Exchange Act, as amended. The purposes and objective of the Advisory Committee are more fully set

forth in the April 11, 1986 Fifth Renewal Charter of the Advisory Committee.

The meeting is open to the public. The Chairman of the Advisory Committee, Commissioner Fowler C. West, is empowered to conduct the meeting in a fashion that will, in his judgment, facilitate the orderly conduct of business. Any member of the public who wishes to file a written statement with the Advisory Committee should mail a copy of the statement to the attention of: The Advisory Committee on CFTC-State Cooperation c/o Commissioner Fowler C. West, Commodity Futures Trading Commission, 2033 K Street, NW., Washington, DC 20581, before the meeting. Meeting of the public who wish to make oral statements should also inform Commissioner West in writing at the latter address at least three business days before the meeting. Reasonable provision will be made, if time permits, for an oral presentation of no more than five minutes each in duration.

Issued by the Commission in Washington, DC on September 18, 1987.

Lynn K. Gilbert,

Deputy Secretary of the Commission.

[FR Doc. 87-21931 Filed 9-22-87; 8:45 am]

BILLING CODE 6351-01-M

DEPARTMENT OF DEFENSE

Privacy Act of 1974; Revision of a Record System Notice

AGENCY: Inspector General, Defense Department.

ACTION: Notice of an amended system of records for public comment.

SUMMARY: The Office of the Inspector General, Department of Defense, is publishing for any public comment a revision of an existing system of records subject to the Privacy Act of 1974 (5 U.S.C. 552a).

DATE: This proposed action will be effective without further notice October 23, 1987, unless comments are received which would result in a contrary determination.

ADDRESS: Send any comments to Mr. J. Mauri Hamilton, Privacy Act Officer, Office of the Inspector General, PPRM (MPEA), Suite 1016, 400 Army Navy Drive, Arlington, VA 22202-2803. Telephone: 202-697-5479, Autovon: 227-5479.

SUPPLEMENTARY INFORMATION: The Inspector General systems of records notices subject to the Privacy Act of 1974 (5 U.S.C. 552a) have been published in the **Federal Register** as follows: FR Doc. 85-10237, 50 FR 22279, May 29, 1985 (Compilation) FR Doc. 87-16034, 52 FR 26547, July 15, 1987.

This revised record system (CIG-07) was formerly published at 50 FR 22285, May 29, 1987. The revision consists of amending the name from "Case Control System—Audit, Audit Follow-up, & Audit Policy and Oversight" to "Decision Support System (DSS)—OAIG-AUD." This title change and revision of the safeguards and storage captions are the major amendments along with other minor editorial changes to update the system notice.

This proposed revision is not with the purview of 5 U.S.C. 552a Section (o) of the Privacy Act of 1974 which requires an agency to submit a new or altered system report.

Patricia H. Means,

OSD Federal Register Liaison Officer, Department of Defense.

September 18, 1987.

CIG-07

SYSTEM NAME:

Decision Support System (DSS)—OAIG-AUD.

SYSTEM LOCATION:

Office of the Assistant Inspector General for Auditing (OAIG-AUD); Planning, Resources, and Reports Division, Room 801, 400 Army Navy Drive, Arlington, VA 22202-2884. Audit is a component of the Office of the Inspector General (OIG), Department of Defense (DoD). Portions of the system may be maintained by other components of OIG.

CATEGORIES OF INDIVIDUALS COVERED BY SYSTEM:

All active personnel employed by the OIG Audit activities to include retired and separated employees. Records on former employees are maintained for two years after termination, reassignment or retirement.

CATEGORIES OR RECORDS IN THE SYSTEM:

Data on individual's current employment status, training experiences, audit and training venues and the following personal data: Name, home address and telephone number, date of birth, race and sex, veterans preference code, handicap code, pay grade and step, federal pay plan, duty address and telephone number, security clearance, computer access code, entered on duty date, service computation date, date of last promotion, date of next evaluation, date of last evaluation, position title, education, number of training days, date of release, hourly rate, career status code, and employee status code.

AUTHORITY FOR MAINTENANCE OF THE SYSTEM:

Pursuant to the authority contained in the Inspector General Act of 1978, (Pub. L. 95-452), as amended, and DoD Directive 5106.1, (32 CFR Part 376) implementing the law, the Inspector General, DoD, is authorized to organize, direct, and manage the Office of the Inspector General, to include the creation and the maintenance of any necessary records. E.O. 9397 (SSN)

PURPOSE(S):

Information is used for:

(1) Personnel and Billet reporting; used by the Staff Manager and all levels of management in the monitoring of personnel actions in regard to promotion eligibility, filling of vacancies, and tracking of personnel transfers and reassignments within the OAIG-AUD. Security clearance notification is provided to all audited activities in advance of visits by audit personnel.

(2) Audit project management and auditor assignment control and reporting; used by managers to maximize manpower resources and to provide audit cost summary data. Resource information includes audit number, milestone dates, projected travel costs, and projected staffing costs.

(3) Staff Utilization reports; used by managers primarily to track manhours allocated towards audit preparation and active audit projects, to allow for more effective scheduling of unassigned personnel, and to categorize indirect time expended for end-of-year reporting.

(4) Travel reporting; tracking temporary duty (TDY) travel frequency and duration. Utilized by managers for workload planning, travel scheduling, and to control travel costs on assigned audit projects.

(5) Time and Attendance (T&A) reporting; provided by all audit activities, to include regional offices in the United States and Overseas. Used by T&A Coordinators to assist in providing time and attendance to the centralized payroll system.

(6) Training reporting; used primarily by the Training Officer and by all levels of management in determining future training needs, to schedule in-house training, and for the monitoring and administering of training for individual development.

ROUTINE USES OF RECORDS MAINTAINED IN THE SYSTEM, INCLUDING CATEGORIES OF USERS AND THE PURPOSES OF SUCH USES:

Information from the system may be provided to other Federal, State and Local Agencies when it is necessary to coordinate responses or denials. The

Blanket Routine Uses set forth at the beginning of the OIG listing of record system notices also apply to this system.

POLICIES AND PRACTICES FOR STORING, RETRIEVING, ACCESSING, RETAINING AND DISPOSING OF RECORDS IN THE SYSTEM:

STORAGE:

The DSS system of records is currently stored on direct access disk and magnetic tape backup at the Washington Computer Center (WCC), United States Department of Agriculture, Washington, DC 20250.

RETRIEVABILITY:

Records can be retrieved by SSN. A specified data element or a combination thereof contained in this system of records can be used for accessing information.

SAFEGUARDS:

Computer systems in which records reside are located in secured rooms accessible only to authorized personnel. Access to the DSS is protected through the use of assigned user/ID's and passwords for entry to the different subsystem applications. Once entry is acknowledged by the system; individual(s) are only allowed to perform predefined transactions/processes on files according to their access levels and functionality.

RETENTION AND DISPOSAL:

Active records for individuals are maintained continuously or as needed. Deletion of records from the system for inactive individuals are performed two years from the employee's date of retirement, separation or transfer to another organization. Machine records are destroyed by erasure or overprinting. Paper records are destroyed as if classified waste.

SYSTEM MANAGER(S) AND ADDRESS:

Assistant Inspector General for Auditing, OIG, DoD, Room 1010, 400 Army Navy Drive, Arlington, VA 22202-2884. Telephone: (202) 697-9108.

NOTIFICATION PROCEDURE:

Written requests for access should be addressed to the System Manager. Individuals requesting information should provide proper identification and the location where the individual's record resides; written request must be signed by the individual making the request.

RECORD ACCESS PROCEDURES:

Active, retired, separated, or transferred individuals may request access to their records through a formal written request to the System Manager.

CONTESTING RECORDS PROCEDURES:

Agency rules for access to records and for contesting contents and appealing initial determinations by the individual concerned may be obtained from the System Manager and are contained in OSD Administrative Instruction No. 81 (32 CFR Part 286b) and IG DoD Policies and Procedures Manual, Chapter 33.

RECORD SOURCE CATEGORIES:

Official Personnel Folder and other personnel input documents, activity supervisors, applications and other official OAIG-AUD forms completed by the individual.

EXEMPTIONS CLAIMED FOR THE SYSTEM:

None.

[FR Doc. 87-21956 Filed 9-22-87; 8:45 am]

BILLING CODE 3810-01-M

Office of the Secretary

Changes in Meeting of the Defense Science Board Task Force on B-1B Defensive Avionics

ACTION: Change in date/location of advisory committee meeting notice.

SUMMARY: The meeting of the Defense Science Board Task Force on B-1B Defensive Avionics scheduled for September 16-18, 1987 as published in the **Federal Register** (Vol. 52, No. 169, Page 32960, Tuesday, September 1, 1987, FR Doc. 87-20063) will be held on September 24-25, 1987.

Patricia H. Means,

OSD Federal Register Liaison Officer, Department of Defense.

September 18, 1987.

[FR Doc. 87-21958 Filed 9-22-87; 8:45 am]

BILLING CODE 3810-01-M

Defense Science Board Task Force on Low Observable Technology; Advisory Committee Meetings

ACTION: Notice of advisory committee meetings.

SUMMARY: The Defense Science Board Task Force on Low Observable Technology will meet in closed session on October 27-28, December 8-9, 1987, January 13-14, and February 10-11, 1988 at the Institute for Defense Analyses, Alexandria, Virginia.

The mission of the Defense Science Board is to advise the Secretary of Defense and the Under Secretary of Defense for Acquisition on scientific and technical matters as they affect the perceived needs of the Department of Defense. At these meetings the Task Force will evaluate low observable technology.

In accordance with section 10(d) of the Federal Advisory Committee Act, Pub. L. 92-463, as amended (5 U.S.C. App. II, (1982)), it has been determined that these DSB Task Force meetings, concern matters listed in 5 U.S.C. 552b(c)(1) (1982); and the accordingly these meetings will be closed to the public.

Patrica H. Means,

OSD Federal Register Liaison Officer, Department of Defense.

September 18, 1987.

[FR Doc. 87-21957 Filed 9-22-87; 8:45 am]

BILLING CODE 3810-01-M

Defense Mapping Agency

Establishment and Availability; Negative Declaration Regarding Defense Agency Reston Center

AGENCY: Defense Mapping Agency, DOD.

ACTION: Notice of the establishment and availability of the negative declaration regarding the Defense Agency Reston Center.

SUMMARY: On 4 September 1987, Rear Admiral O. E. Osborn, U.S. Navy, Acting Director, Defense Mapping Agency, Building 56, U.S. Naval Observatory, Washington, DC 20305-3000, announced his decision to establish the Defense Mapping Agency Reston Center (DMARC), effective 1 October 1987. The DMA Reston Center will be located at 12310 Sunrise Valley Drive, Reston, VA 22091.

Notice is hereby given, pursuant to section 102(2)(c) of the National Environmental Policy Act of 1969, the Council on Environmental Quality Guidelines (40 CFR Part 1500) and Department of Defense Regulation "Environmental Considerations in Department of Defense Actions" (32 CFR Part 214) that an Environmental Impact Statement has not been prepared for the establishment of the DMARC. The Environmental Assessment of this action indicates that staffing and equipping this new Center will not create any significant adverse impacts on the physical environment and that no significant controversy related to the natural environment is associated with this action. As a result of these findings, the Acting Director, DMA, has determined that the preparation of an Environmental Impact Statement is not required in this case.

The Environmental Assessment upon which this management decision is

based is a classified document and is not releasable to the public. The Finding of No Significant Impact is on file and may be reviewed by interested parties.

DATE: Administrative action on implementation of the decision will begin immediately.

FOR FURTHER INFORMATION CONTACT: Mr. Edward J. Obloy, General Counsel, Headquarters, Defense Mapping Agency, Building 56, U.S. Naval Observatory, Washington, DC 20305-3000, phone number (202) 653-1406.

Patricia R. Means,

OSD Federal Register Liaison Officer, Department of Defense.

September 18, 1987.

[FR Doc. 87-21955 Filed 9-22-87; 8:45 am]

BILLING CODE 3810-01-M

DEPARTMENT OF EDUCATION

[CFDA No. 84.116A]

Notice Inviting Preapplications and Applications for New Awards Under the Comprehensive Program of the Fund for the Improvement of Postsecondary Education (FIPSE) for Fiscal Year 1988

Purpose: Provides grants to or enters into cooperative agreements with institutions of postsecondary education and other public and private institutions and agencies to improve postsecondary education and educational opportunities.

Priorities: The Secretary supports a broad range of programs that seek to improve postsecondary education. In accordance with 34 CFR 75.105(c)(1), the following guidelines suggest areas in which proposals would be especially welcome. However, the list is not meant to be exhaustive. Projects that do not fit any of these guidelines are also eligible for support if they address other significant problems in postsecondary education. Proposals are solicited that seek to—(1) Ensure that undergraduate curricula provide the knowledge and skills which an educated citizen needs, including knowledge of our intellectual and cultural heritage; (2) ensure that recent increases in access to postsecondary education are made meaningful by improving retention and completion rates without compromising program standards; (3) improve the quality of undergraduate education by raising academic standards for the bachelors degree, strengthening the liberal arts component of undergraduate professional programs, developing means of assessing and comparing programs and institutions, and recognizing and rewarding outstanding undergraduate teaching through hiring, tenure, and promotion policies; (4) reform the education of school teachers by making it easier for able people to qualify as teachers who have earned degrees in fields other than education and who currently lack pedagogical training, increasing current and prospective teachers' mastery of the subjects they teach, ensuring that prospective teachers have a solid grounding in the liberal arts, and attracting more people of commitment and high intellectual ability to the teaching profession; (5) reform graduate education by fostering the teaching skills of Ph.D. candidates bound for careers in teaching, and broadening the social and ethical perspectives of students in professional graduate programs generally; (6) strengthen post-secondary educational institutions and organizations by providing incentives to develop the abilities of their leaders, administrators, faculty, and staff; (7) provide education for a changing economy by offering educational programs and services for workers, unemployed individuals, businesses, and communities; or (8) develop educational uses of technology, including computers, television, and other electronic media.

Deadline for Transmittal of Preapplications: November 16, 1987.

Deadline for Transmittal of Applications: March 7, 1988.

Applications Available: October 1, 1987.

Available Funds.

The Administration's budget request for fiscal year 1988 includes $7,500,000 for FIPSE. The Congress has not yet completed action on the 1988 appropriation. The estimates below are based upon the FY 1987 appropriation.

Estimated Size of Awards: $5,000 to $200,000 per year.

Estimated Number of Awards: 70.

Project Period: 12 to 36 months.

Applicable Regulations. (a) The Education Department General Administrative Regulations, 34 CFR Parts 74, 75, 77, and 78, and (b) the regulations in 34 CFR Part 630, with the exceptions noted in 34 CFR 630.4.

For Applications and Information Contact: The Fund for the Improvement of Postsecondary Education, 400 Maryland Avenue, SW., Room 3100, ROB-3, Washington, DC 20202. Telephone (202) 245-8091/8100.

Program Authority: 20 U.S.C. 1135.

Dated: September 18, 1987.

C. Ronald Kimberling,

Assistant Secretary for Postsecondary Education.

[FR Doc. 87-21947 Filed 9-22-87; 8:45 am]

BILLING CODE 4000-01-M

DEPARTMENT OF ENERGY

Voluntary Agreement and Plan of Action To Implement The International Energy Program; Meeting

In accordance with section 252(c)(1)(A)(i) of the Energy Policy and Conservation Act (42 U.S.C. 6272(c)(1)(A)(i)), the following meeting notice is provided:

A meeting of the Industry Advisory Board (IAB) to the International Energy Agency (IEA) will be held on October 1, 1987, a the offices of Chevron Corporation, 575 Market Street, 40th Floor, San Francisco, California, beginning at 9:30 a.m.

The agenda for the meeting is as follows:

1. Opening remarks
2. Approval of the Record Note of the Industry Advisory Board Meeting of June 9, 1987
3. Correspondence and Communications with IEA and Reporting Companies
4. IEA Test Issues
   —Test Guide for Coordinated Emergency Response Measures
   —Status of Preparations for Data Test and the Sixth Allocation Systems Test
5. Emergency Stocks
   —Revision of Minimum Operating Requirements—Progress Report
   —Mandatory Stocks of IEA Member Countries
   —Questionnaire on "Compensation" for Early Coordinated Emergency Response Measures
6. Other Emergency Preparedness Issues
   —U.S. Plan of Action
   —Middle East Oil Supply Flows
   —New Forms of Oil Trading—The Futures Market. Possible Implications for the IEA Oil Emergency Sharing System
7. IAB Organization, Leadership, and Succession
8. Date and Time of Next Meeting

As provided in section 252(c)(1)(A)(ii) of the Energy Policy and Conservation Act, the IAB meeting is open only to representatives of members of the IAB, their counsel, representatives of the Department of Energy, Justice, State, the Federal Trade Commission, and General Accounting Office, representatives of Congress, representatives of the IEA, representatives of the Commission of

the European Communities, and invitees of the IAB or the IEA.

Issued in Washington, DC. September 18, 1987

Eric J. Fygi

Acting General Counsel

[FR Doc. 87-21754 Filed 9-22-87; 8:45 am]

BILLING CODE 6450-01-M

Office of Conservation and Renewable Energy

[Case No. CAC-003]

Energy Conservation Program For Consumer Products; Decision and Order Granting Waiver From Test Procedures for Central Air Conditioners From the Trane Co.

AGENCY: Department of Energy.

ACTION: Decision and order.

SUMMARY: Notice is given of the Decision and Order (Case No. CAC-003) granting the Trane Company a waiver for its TWS variable-speed model series central air conditioner and heat pump from existing DOE test procedures for determining the unit's Heating Seasonal Performance Factor (HSPF).

FOR FURTHER INFORMATION CONTACT:

Michael J. McCabe, U.S. Department of Energy, Office of Conservation and Renewable Energy, Mail Station CE-132, Forrestal Building, 1000 Independence Avenue, SW., Washington, DC 20585, (202) 586-9127

Eugene Margolis, Esq., U.S. Department of Energy, Office of General Counsel, Mail Station GC-12, Forrestal Building, 1000 Independence Avenue, SW., Washington, DC 20585 (202) 586-9507

SUPPLEMENTARY INFORMATION: In accordance with 10 CFR 430.27(1), notice is hereby given of the issuance of the Decision and Order as set out below. The Trane Company has been granted a waiver for its TWS model, series variable-speed central air conditioner (heat pump) permitting the company to use an alternate test method in determining the Heating Seasonal Performance Factors (HSPF).

Issued in Washington, DC., September 11, 1987.

John R. Berg,

Principal Deputy Assistant Secretary, Conservation and Renewable Energy.

Decision and Order of The Department of Energy, Office of Conservation and Renewable Energy

In the matter of: The Trane Co.

[Case No. CAC-003]

The Energy Conservation Program for Consumer Products was established pursuant to the Energy Policy and Conservation Act, Pub. L. 94-163, as amended by the National Energy Conservation Policy Act, Pub. L. 95-619, and the National Appliance Energy Conservation Act of 1987 (NAECA), Pub. L. 100-12, which requires the Department of Energy (DOE) to prescribe standardized test procedures to measure the energy consumption of certain consumer products, including central air conditioners. The intent of the test procedures is to provide a comparable measure of energy consumption that will assist consumers in making purchase decisions. These test procedures appear at 10 CFR Part 430, Subpart B.

The Department of Energy amended the test procedure regulations by adding § 430.27 on September 26, 1980, creating the waiver process. 45 FR 64108. DOE further amended the Department's appliance test procedure waiver process to allow the Assistant Secretary for Conservation and Renewable Energy to grant an interim waiver from test procedure requirements to manufacturers that have petitioned DOE for a waiver of such prescribed product test procedures. 51 FR 42823, November 26, 1986. The waiver process allows the Assistant Secretary for Conservation and Renewable Energy to waive temporarily test procedures for a particular basic model when a petitioner shows that the basic model contains one or more design characteristics which prevent testing of the basic model according to the prescribed test procedures or when the prescribed test procedures may evaluate the basic model in a manner so unrepresentative of its true energy consumption characteristics as to provide materially inadequate comparative data.

The Trane Company (Trane) filed a "Petition for Waiver" dated March 10, 1987, in accordance with § 430.27 of 10 CFR Part 430. DOE published in the **Federal Register** Trane's petition and solicited comments, data, and information respecting the petition. 52 FR 17315, May 7, 1987. Trane subsequently filed an "Application for Interim Waiver" under § 430.27(g) and DOE granted the Trane Company an interim waiver to central air conditioner test procedures. (Case No. CAC-003I). 52 FR 17798, May 12, 1987.

No comments were received concerning either the "Petition for Waiver" or the "Interim Waiver." DOE notified Trane by letter dated June 15, 1987, that no rebuttal was required. DOE consulted with the National Bureau of Standards (NBS) by phone and meeting, on June 22 and 29, 1987, respectively, and the Federal Trade Commission (FTC) by phone on July 23, 1987, concerning the Trane petition. The NBS responded to our request for an evaluation of the waiver test procedure in a letter report dated July 9, 1987. The FTC voiced no opposition to the issuance of the waiver to Trane.

Assertions and Determinations

Trane's petition seeks a waiver from the DOE test provisions that require testing at a single compressor speed. Trane was granted a waiver from the DOE test provisions that require testing its TWS variable-speed model series heat pump in the cooling mode at a single compressor speed on April 13, 1987. 57 FR 11855. (Hereafter referred to as the April Decision and Order.) Trane requests allowance to use DOE's proposed variable-speed test procedure, 51 FR 35736, October 7, 1986, including parts of Appendix B of the Air Conditioning and Refrigeration Institute (ARI) Standard 210/240-84 with certain modifications to determine the unit's HSPF. Trane's petition requests that steady-state test points be at maximum, minimum, and "nominal capacity" speeds in order to accurately reflect the system's HSPF rating. One of the changes requested by Trane is that the frost/defrost test run for HSPF, be run at the intermediate speed specified in the April Decision and Order for the cooling test with a tolerance of ± 5 percent. Trane further requests to use DOE's proposed procedure for cyclic testing with both capacity and fan power integrated to the time determined by the units automatic controls. Trane also requests to use the ARI Standard 210/240-84 method of determining the heating part load factor instead of the DOE proposed procedure.

Trane identified its TWS variable-speed model series heat pump as using variable-speed motors to drive the compressor, indoor blower, and outdoor fan. The compressor is controlled over a wide range of speeds. Modulation of all three motors allows the system to meet specific building load requirements. The system operates at variable-speed using a microprocessor in conjunction with a special thermostat. It was established in previous waiver evaluations concerning variable-speed heat pumps that the existing test and calculation method of Appendix M to Supart B of 10 CFR Part 430 were inappropriate. The waiver granted to Carrier specified a test procedure that was based on Appendix B of ARI Standard 210/240-84. (Case

CAC-001) 51 FR 35403, October 3, 1986. The commenters on the Carrier wavier agreed that the use of Appendix B of ARI Standard 210/240 was appropriate for variable-speed systems.

NBS conducted a review of the procedure as outlined by Trane, and summarized its comments in a letter report dated July 9, 1987. The aim of the review by NBS was to verify that Trane's waiver test procedure is consistent with the existing test procedure for single speed and two speed systems, and with the waiver granted to Carrier for its variable speed central air conditioner. Current DOE procedures evaluate the HSPF for various building loads based on various design heating requirements. The HSPF value determined for minimum design heating requirement (DHR_{min})for Region IV [1] is used as a basis for informing the consumer of the unit's efficiency. NBS agreed that the test procedure proposed by Trane determines the Region IV value of HSPF in an accurate manner. The Trane method was analyzed to determine if it provided an unfair advantage when used for other building loads and was found to be reasonable.

The cyclic test as proposed by Trane establishes requirements for compressor "on" time and "off" time. Trane requested the compressor "on" time be 6 minutes or the minimum time allowed by the controls, whichever was greater. This ability to modulate the compressor "on" time is not available in any other test method and was therefore viewed by NBS as inappropriate. However, NBS suggested three alternatives for compressor "on" time. DOE, in reviewing comments by NBS, has determined that in order to be consistent with previous waivers granted and provide a fair approach to Trane, a 12 minute compressor "on" time should be granted.

It is DOE's position that an absence of comments from concerned parties represents a general agreement with the Trane proposed waiver. The comments and concerns expressed by NBS have provided the theoretical evaluation of the procedure requested by the Trane Company, and its suitability as an alternative to the existing procedure. The modifications requested by Trane concerned the compressor "on" time; the degradation coefficient C_D; and the intermediate speed test.

Based on the information provided by the petitioner, NBS report and DOE's internal review, DOE is granting Trane's request for the use of Appendix B of ARI Standard 210/240-84 for determining the heating seasonal performance factor of variable-speed central air conditioners and heat pumps (heating mode) with the modifications discussed above.

It is, therefore, ordered that:

(1) The "Petition for Waiver" filed by The Trane Company (CAC-003) is hereby granted as set forth in paragraph (2) below, subject to the provisions of paragraphs (3), (4) and (5).

(2) Notwithstanding any contrary provisions of Appendix M of 10 CFR Part 430 Subpart B, the Trane Company shall be permitted to test its TWS variable-speed model air conditioners and heat pumps on the basis specified in 10 CFR Part 430, with the modifications set forth below:

(i) Test Procedure

The test procedures shall be as specified in section 5.0 of ARI Standard 210/240-84 and in section 8.0 of ANSI/ASHRAE Standard 116-1983, with the inclusion of the following conditions:

Heating cyclic tests shall be conducted by cycling the compressor "on" for 12 minutes and "off" for 48 minutes. The method of test shall be the damper method, which is described in Appendix M to Subpart B of 10 CFR Part 430.

The indoor air moving equipment shall cycle "off" as governed by any automatic controls normally installed with the unit. Both net capacity and power shall be integrated. This applies to units having an indoor fan time delay. Units not supplied with an indoor fan time delay shall have the indoor air moving equipment cycle "on" and "off" as the compressor cycles "on" and "off."

In lieu of conducting heating cyclic tests, an assigned value of 0.25 shall be used for the degradation coefficient (C_D).

(ii) Test Procedures; Intermediate Speed

The frost accumulation test shall be conducted at the temperature conditions in Appendix B of ARI Standard 210/240-84.

The unit shall be operated at a constant, intermediate compressor speed (K=Vn). The intermediate compressor speed shall be within 5 percent of the intermediate speed measured during the intermediate speed test in the cooling mode.

(iii) Heating Seasonal Performance Factor

The heating seasonal performance factor (HSPF) shall be expressed in Btu per watt-hour. For each of the six regions specified in Table 4 of this waiver, a separate HSPF shall be determined for the standardized maximum DHR, the standardized minimum DHR and for all other standardized DHR's in Appendix M between the maximum and minimum values.

HSPF shall be defined as the heating seasonal performance factor as specified in 2.2 of Appendix B of ARI Standard 210/240-84 multiplied by 3.413 Btu/hr in which the number of hours in the J_{th} temperature bin (n_j) is defined in Table 2 of this waiver and in which the part-load factor (PLF) in the equation for power input ($E(t_j)$) is defined in section 2.2 of Appendix B of ARI Standard 210/240-84.

The HSPF shall be determined by the method for two speed or two compressor units, as specified in ANSI/ASHRAE Standard 116-1983 and ARI Standard 210/240-84, and in accordance with the following changes. The DHR shall be determined by heating capacity at 70-47/43, nominal compressor speed, using Table 6.2.6 in ARI Standard 240-81 as defined in ARI Standards 210/240-84 Appendix A. "Nominal" shall be defined as the lesser of the heating capacity at the maximum compressor speed allowed by the controls in the cooling mode or the maximum speed allowed by the controls in the heating mode.

The capacity for the unit modulating at the intermediate compressor speed (k=v) at any temperature (t_j) is determined by:

[1] There are six regions for HSPF; ARI and other industry representatives have agreed that Region IV is representative of average usage. NAECA established levels for central air conditioners based on Region IV.

$$q^{k=v}(t_j) = q^{k=v}(35) + M_q (t_j - 35)$$

where: $q^{k=v}(35)$ = the capacity of the unit at 35°F determined at the intermediate compressor speed (k=v) in the frost accumulation test

M_q = slope of the capacity curve for the intermediate compressor speed (k=v)

$$M_q = \frac{Q_{ss}^{k=1}(62) - Q_{ss}^{k=1}(47)}{62 - 47} * (1 - N_q) + N_q \frac{Q_{ss}^{k=2}(47) - Q_{ss}^{k=2}(17)}{47 - 17}$$

$$N_q = \frac{Q_{ss}^{k=v}(35) - Q_{ss}^{k=1}(35)}{Q_{ss}^{k=2}(35) - Q_{ss}^{k=1}(35)}$$

Once the equation for $q^{k=v}(t_j)$ has been determined, the temperature where $q^{k=v}(t_j) = BL(t_j)$ can be found. This temperature is designated as t_{vH}. A separate t_{vH} shall be determined for each design heating requirement.

The electrical power for the unit operating at the intermediate compressor speed (k=v) and at the temperature (t_{vH}) is determined by:

$$E_{ss}^{k=v}(t_{VH}) = E_{ss}^{k=v}(35) + M_E(t_{VH} - 35)$$

where: $E_{ss}^{k=v}(35)$ = the electrical power input of the unit at 35°F determined at the intermediate compressor speed (k=v) in the frost accumulation test

M_E = slope of the electrical power input curve for the intermediate compressor speed (k=v)

$$M_E = \frac{E_{ss}^{k=1}(62) - E_{ss}^{k=1}(47)}{62 - 47} * (1 - N_E)$$

$$+ N_E \frac{E_{ss}^{k=2}(47) - E_{ss}^{k=2}(17)}{47 - 17}$$

$$N_E = \frac{E_{ss}^{k=v}(35) - E_{ss}^{k=1}(35)}{E_{ss}^{k=2}(35) - E_{ss}^{k=1}(35)}$$

The following section replaces Case II in section 2.2 of ARI Standard 210/240-84.

Case II. When the compressor speed varies between the maximum speed (k=2) and minimum speed (k=1) such that k=v to satisfy the building load at temperature t_j evaluate the following equations:

BILLING CODE 6450-01-M

$$q_{ss}^{k=v}(t_j) = BL\ (t_j)$$

where: $q_{ss}^{k=v}(t_j)$ = steady-state capacity delivered by the unit at any speed between the minimum and maximum compressor speeds at temperature t_j

when $t_j \geq t_{VH}$

$$E_{ss}^{k=v}(t_j) = E_{ss}^{k=v}(t_{VH}) + \frac{E_{ss}^{k=1}\ (t_3) - E_{ss}^{k=v}\ (t_{VH})}{t_3 - t_{VH}} * (t_j - t_{VH})$$

where: $E_{ss}^{k=v}(t_j)$ = the electrical power input required by the unit at temperature t_j and at a variable compressor speed between the minimum and maximum compressor speeds

$E_{ss}^{k=v}(t_{VH})$ = the electrical power input required by the unit at temperature t_{VH} and at the intermediate compressor speed (k=v), as determined above

$E_{ss}^{k=1}(t_3)$ = the electrical power input required by the unit at temperature t_3 and at the minimum compressor speed

t_3 = temperature at which $q_{ss}^{k=1}\ (t_j) = BL(t_j)$

when $t_j < t_{VH}$

$$E_{ss}^{k=v}(t_j) = E_{ss}^{k=v}(t_{VH}) + \frac{E_{ss}^{k=2}\ (t_4) - E_{ss}^{k=v}\ (t_{VH})}{t_{VH} - t_4} * (t_{VH} - t_j)$$

where: $E_{ss}^{k=2}(t_4)$ = the electrical power input required by the unit at temperature t_4 and at the maximum compressor speed

t_4 = temperature at which $q_{ss}^{k=2}\ (t_j) = BL(t_j)$

BILLING CODE 6450-01-C

(iv) Demand Defrost Credit

For air-source units that are equipped with "demand defrost control systems", the value for HSPF, as determined above shall be multiplied by an enhancement factor, F_{def} to compensate for improved performance not measured in the Frost Accumulation Test. The factor, F_{def} depends on the number of defrost cycles in a 12-hour period (n) and shall be calculated as follows:

$F_{def} = 1.03 + 0.03\ (90\text{-}t)/630$ for $t > 90$ minutes

$F_{def} = 1.03$ for $t < 90$ minutes

where t = length of the defrost accumulation period in minutes.

(v) Annual Performance Factor

The annual performance factor (APF) shall be expressed in Btu per watt-hour. For each of the six regions in Table 2, a separate APF shall be determined for the standardized maximum DHR, the standardized minimum DHR and for all other standardized DHR's (See Table 6.2.6 in Appendix M to Subpart B of 10 CFR Part 430) between the maximum and minimum values, APF shall be defined as:

$$APF = \frac{[CLH * Q_{SS}(95)] + [HLH * DHR * C]}{\dfrac{CLH * Q_{SS}(95)}{SEER} + \dfrac{HLH * DHR * C}{HSPF}}$$

Where:

CLH = cooling load hours for regions in Table 4 Q_{ss} (95) = steady-state capacity as measured in Test A

HLH = heating load hours for a region as in Table 4

DHR = standardized design heating requirement

C = adjustment factor which serves to adjust the calculated design heating load hours experienced by a heating system and is 0.77

SEER = seasonal energy efficiency ratio as determined by 4.1 of Appendix M1 in DOE proposed test procedure, 51 FR 35736, October 7, 1986.

HSPF = heating seasonal performance factor as determined by 4.2 of Appendix M1, DOE proposed test procedure, 51 FR 35736, October 7, 1986.

TABLE 2.—DISTRIBUTION OF TEMPERATURE BIN HOURS FOR HEATING

Bin No. (j)	Representative bin temperature (Tj)	Temperature Bin hours for each region					
		I	II	III	IV	V	VI
1	62	218	268	268	297	291	311
2	57	179	236	248	250	253	566
3	52	145	204	241	232	236	591
4	47	97	179	240	209	209	561
5	42	61	140	236	225	214	388
6	37	31	110	206	245	239	209
7	32	14	70	161	283	280	94
8	27	4	30	82	196	258	22
9	22	1	10	37	124	204	8
10	17	0	3	16	81	151	0
11	12	0	0	9	58	129	0
12	7	0	0	4	29	105	0
13	2	0	0	2	14	80	0
14	−3	0	0	0	5	50	0
15	−8	0	0	0	2	28	0
16	−13	0	0	0	0	14	0
17	−18	0	0	0	0	6	0
18	−23	0	0	0	0	3	0

TABLE 4.—REGIONAL COOLING LOAD HOURS (CLH) HEATING LOAD HOURS (HLH), OUTDOOR DESIGN TEMPERATURE (T_{OD}) AND MEAN GROUND-WATER TEMPERATURE (T_W)

Region	CLH	HLH	T_{OD}	T_W
I	2400	750	37	72
II	1800	1250	27	68
III	1200	1750	17	62
IV	800	2250	5	53
V	400	2750	−10	45
VI	200	2750	30	55

(3) The waivers shall remain in effect from the date of issuance of this Order until the Department of Energy prescribes final test procedures appropriate to variable-speed central air conditioners and heat pumps.

(4) This waiver is based upon the presumed validity of statements, allegations, and documentary materials submitted by the applicants and commenters. These waivers may be revoked or modified at any time upon a determination that the factual basis underlying the application is incorrect.

(5) Effective October 23, 1987, this waiver supersedes the Interim Waiver granted Trane on April 24, 1987. 51 FR 17798, May 12, 1987. (Case No. CAC-003I).

[FR Doc. 87-21952 Filed 9-22-87; 8:45 am]

BILLING CODE 6450-01-M

Economic Regulatory Administration

Proposed Consent Order with Carlson Companies, Inc. and Ferrell Companies, Inc.

AGENCY: Economic Regulatory Administration, Department of Energy.

ACTION: Notice of proposed consent order and opportunity for comments.

SUMMARY: The Economic Regulatory Administration (ERA) of the Department of Energy (DOE) announces a proposed Consent Order with Carlson Companies, Inc., (Carlson) and Ferrell Companies, Inc., (Ferrell), for $1,500,000.00.

DATE: Comments by October 23, 1987.

ADDRESS: Send comments to Carlson and Ferrell Comments, Office of the Solicitor, Economic Regulatory Administration, Department of Energy, 1000 Independence Avenue, SW., Washington, DC 20585.

FOR FURTHER INFORMATION CONTACT: Martin F. Katz, Office of Solicitor (RG-43), Economic Regulatory Administration, 1000 Independence Avenue SW., Washington, DC 20585. Copies of the proposed Consent Order may be obtained free of charge by writing or calling this office at (202) 586-4235.

SUPPLEMENTARY INFORMATION: On August 14, 1987, the ERA executed a proposed Consent Order with Carlson and Ferrell. Under 10 CFR 205 through 199J(b), a proposed Consent Order which involves the sum of $500,000.00 or more, excluding interest and penalties, becomes effective no sooner than thirty (30) days after publication of a notice in the **Federal Register** requesting comments concerning the proposed Consent Order. Although ERA has signed and tentatively accepted the proposed Consent Order, the ERA may, after consideration of the comments it receives, withdraw its acceptance and, if appropriate, attempt to negotiate a modification of the Consent Order, or issue the Consent Order as signed. DOE's final decision will be published in the **Federal Register**, along with an analysis of and response to the significant comments, as well as any other considerations that were relevant to the decision.

I. Background

The stipulated facts upon which this Consent Order is based are as follows:

During the initial portion of the period covered by the Consent Order, Indian Wells Operating Company operated a gas processing plant located in Crockett County, Texas. After the dissolution of Indian Wells Operating Company, the Crockett Plant was acquired by Indian Wells Oil Company, ("Indian Wells"), which also continued to operate the plant. Indian Wells was equally owned by Carlson and Ferrell. Indian Wells was a "refiner" as defined in 6 CFR 150.352 and 10 CFR 212.31 and "natural gas processor" as defined in 10 CFR 212.162 and was subject to the jurisdiction of DOE. During the period covered by this Consent Order, Indian Wells engaged in the extraction, fractionation and sale of natural gas liquids and natural gas liquid products and was subject to the pricing provisions of 10 CFR 212.1, *et seq.* and its antecedent regulations.

The DOE audited Indian Wells and its predecessor corporations. As part of its audit, DOE examined Indian Wells' books and records relating to its compliance with the federal petroleum price and allocation regulations. As a result of this audit, the DOE issued a Remedial Order on December 3, 1986 which found that Indian Wells had overcharged in its sales of natural gas liquids and natural gas liquids products during the period of September 1, 1973 through January 31, 1976, in the amount of $1,300,471.47 plus interest of $2,575,392.92 (15 DOE ¶ 83,010).

The DOE regulations define a "firm" as a parent and the consolidated and unconsolidated entities it directly or indirectly controls. Pursuant to this definition, Carlson and Ferrell are liable for the overcharges at issue in the Remedial Order.

Carlson and Ferrell maintain that Indian Wells calculated its costs, determined its prices, sold its natural gas liquids and liquid products, and operated in all other respects in accordance with the federal petroleum price and allocation regulations. Carlson and Ferrell deny the findings set forth in the Remedial Order and are presently appealing it before the Federal Energy Regulatory Commission.

Based on an analysis of Carlson and Ferrell's arguments, the entire record in this proceeding, and in light of the expense to the government associated with any additional litigation, ERA believes that a total payment of $1,500,000.00 is a satisfactory compromise of the issues raised in the audit.

II. The Consent Order

The proposed Consent Order has been entered into by DOE and Carlson and Ferrell in order to resolve all civil and administrative disputes, claims, and causes of action by DOE against Carlson and Ferrell relating to Indian Wells' compliance with the Federal petroleum price and allocation regulations during the period August 1, 1973 through January 27, 1981. Although Carlson and Ferrell contend that in all respects Indian Wells correctly construed and complied with applicable regulations, they have entered into this proposed Consent Order to avoid possible further expenses and disruption of business. DOE believes the proposed Consent Order is in the public interest and provides a satisfactory resolution of the issues raised by the audit.

III. Refunds

Under the terms of the Consent Order, Carlson and Ferrell are required to pay the sum of $1,500,000.00 within thirty (30) days of the effective date of the Consent Order. DOE will petition the Office of Hearings and Appeals for distribution of the settlement amount pursuant to the special refund procedures of 10 CFR Part 205, Subpart V.

IV. Submission of Written Comments

Interested persons are invited to submit written comments concerning the terms and conditions of this proposed Consent Order to the address given above. The ERA will consider all comments it receives by 4:30 p.m., local time, on the 30th day after the date of publication of this notice. Any information or data considered confidential by the person submitting it must be identified as such in accordance with the procedures in 10 CFR 205.9(f).

Issued in Washington, DC on this 17th day of September, 1987.

Marshall A. Staunton,

Administrator, Economic Regulatory Administration.

[FR Doc. 87-21951 Filed 9-22-87; 8:45 am]

BILLING CODE 6450-01-M

Energy Information Administration

Agency Collections Under Review by the Office of Management and Budget

AGENCY: Energy Information Administration, DOE.

ACTION: Notice of requests submitted for clearance to the Office of Management and Budget.

SUMMARY: The Energy Information Administration (EIA) has submitted the energy information collection(s) listed at the end of this notice to the Office of Management and Budget (OMB) for approval under provisions of the Paperwork Reduction Act (44 U.S.C. Chapter 35).

The listing does not contain information collection requirements contained in new or revised regulations which are to be submitted under 3504(h) of the Paperwork Reduction Act, nor management and procurement assistance requirements collected by the Department of Energy (DOE).

Each entry contains the following information: (1) The sponsor of the

collection (the DOE component or Federal Energy Regulatory Commission (FERC)); (2) collection number(s); (3) current OMB docket number (if applicable); (4) collection title; (5) type of request, e.g., new, revision, or extension; (6) frequency of collection; (7) response obligation, i.e., mandatory, voluntary, or required to obtain or retain benefit; (8) affected public; (9) an estimate of the number of respondents per report period; (10) an estimate of the number of responses annually; (11) annual respondent burden, i.e., an estimate of the total number of hours needed to respond to the collection; and (12) a brief abstract describing the proposed collection and the respondents.

DATES: Comments must be filed on or before October 23, 1987. Last notice issued Thursday, August 13, 1987.

ADDRESS: Address comments to the Department of Energy Desk Officer, Office of Management and Budget, 726 Jackson Place NW., Washington, DC 20503. (Comments should also be addressed to the Office of Statistical Standards, at the address below.)

FOR FURTHER INFORMATION AND COPIES OF RELEVANT MATERIALS CONTACT: Carole Patton, Office of Statistical Standards (EI-70), Energy Information Administration, M.S. 1H-023, Forrestal Building, 1000 Independence Avenue SW., Washington, DC 20585, (202) 586-2222.

SUPPLEMENTARY INFORMATION: If you anticipate that you will be submitting comments, but find it difficult to do so within the period of time allowed by this Notice, you should advise the OMB DOE Desk Officer of your intention to do so as soon as possible.

The energy information collection submitted to OMB for review were:

1. Energy Information Administration.
2. EIA-28.
3. 1905-0149.
4. Financial Reporting System.
5. Revision.
6. Annually.
7. Mandatory.
8. Business or other for profit.
9. 22 respondents.
10. 22 responses.
11. 23,232 hours.
12. The Form EIA-28 provides data to evaluate the energy industry competitive environment and to analyze energy industry resource development, supply, distribution, and profitability issues. Survey results from 22 major energy producers are published annually for both private and public sector use.

1. Federal Energy Regulatory Commission.
2. FERC-569.
3. 1902-0111.
4. Refund Obligations (Producer).
5. Extension.
6. On occasion.
7. Mandatory.
8. Businesses or other for profit.
9. 3,900 respondents.
10. 3,900 responses.
11. 3,900 hours.
12. FERC-569, Refund Obligations (Producer) is an information collection which is mandatory pursuant to sections 503(e) and 504(a) of the NGPA for interim collection of wellhead prices subject to refund.

Statutory Authority: Secs. 5(a), 5(b), 13(b), and 52, Pub. L. 93-275, Federal Energy Administration Act of 1974, (15 U.S.C. 764(a), 764(b), 772(b), and 790a).

Issued in Washington, DC, September 16, 1987.

Yvonne M. Bishop,

Director, Statistical Standards, Energy Information Administration.

[FR Doc. 87-21953 Filed 9-22-87; 8:45 am]

BILLING CODE 6450-01-M

Federal Energy Regulatory Commission

[Docket No. RP87-98-000]

Proposed Changes in FERC Gas Tariff; Canyon Creek Compression Co.

September 17, 1987.

Take notice that on August 31, 1987, Canyon Creek Compression Company (Canyon) tendered for filing Fifth Revised Sheet No. 4 and Original Sheet Nos. 130 and 131 to be a part of its FERC Gas Tariff, Original Volume No. 1.

Canyon states that the above-mentioned tariff sheets were submitted in compliance with Commission Order No. 472, issued May 29, 1987. The proposed tariff provides a mechanism for Canyon to recover from its customers annual charges assessed it by the Commission pursuant to Part 382 of the Commission's Regulations.

A copy of this filing was mailed to Canyon's jurisdictional customers and interested state regulatory agencies.

Any person desiring to be heard or to protest said filing should file a motion to intervene or protest with the Federal Energy Regulatory Commission, 825 North Capitol Street NE., Washington, DC 20426, in accordance with §§ 385.214 and 385.211. All such motions or protests must be filed on or before September 24, 1987. Protests will be considered by the Commission in determining the appropriate action to be taken, but will not serve to make protestants parties to the proceeding. Any person wishing to become a party must file a motion to intervene. Copies of this filing are on file with the Commission and are available for public inspection.

Kenneth F. Plumb,

Secretary.

[FR Doc. 87-21876 Filed 9-22-87; 8:45 am]

BILLING CODE 6717-01-M

[Docket No. RP87-133-000]

Tariff Filing and Rate Changes; East Tennessee Natural Gas Co.

September 17, 1987.

Take notice that on September 1, 1987, East Tennessee Natural Gas Company, (East Tennessee), tendered for filing the following tariff sheets to Original Volume No. 1 of its FERC Gas Tariff, to be effective October 1, 1987.

Original Volume No. 1

Substitute Thirtieth Revised Sheet No. 4
First Revised Sheet No. 142

East Tennessee states that it is filing these tariff sheets in response to and in compliance with Order No. 472. East Tennessee states that its filing includes a new section 28, which provides for customer funding of annual charges assessed East Tennessee by the Federal Energy Regulatory Commission pursuant to Order No. 472.

East Tennessee states that copies of the filing have been mailed to all its customers and affected state regulatory commissions.

Any person desiring to be heard or to protest said filing should file a motion to intervene or protest with the Federal Energy Regulatory Commission, 825 North Capitol Street NW., Washington, DC 20426, in accordance with Rules 211 and 214 of the Commission's Rules of Practice and Procedure (18 CFR 385.211 and 385.214). All such motions or protests should be filed on or before September 24, 1987. Protests will be considered by the Commission in determining the appropriate action to be taken, but will not serve to make protestants parties to the proceeding. Any person wishing to become a party to the proceeding must file a motion to intervene. Copies of this filing are on file with the Commission and are available for public inspection.

Kenneth F. Plumb,

Secretary.

[FR Doc. 87-21880 Filed 9-22-87; 8:45 am]

BILLING CODE 6717-01-M

[Docket No. TA87-7-51-000]

Proposed Changes in FERC Gas Tariff Under Purchased Gas Adjustment Clause Provisions; Great Lakes Gas Transmission Co.

September 17, 1987.

Take notice that Great Lakes Gas Transmission Company ("Great Lakes") on September 11, 1987, tendered for filing Eighth Revised Sheet Nos. 57(i) and 57(ii), First Revised Volume No. 1 to its FERC Gas Tariff to be effective September 1, 1987.

These tariff sheets reflect changes in Great Lakes' purchased gas cost applicable to gas sold by Great Lakes to Michigan Consolidated Gas Company ("MichCon"), Northern Minnesota Utilities ("NMU") and Peoples Natural Gas Company ("Peoples").

Great Lakes states that the changes in the MichCon prices are in accordance with the price adjustment provisions that were negotiated in October 1986 between MichCon and TransCanada, the sole supplier of gas to Great Lakes. These price provisions were made a part of the Gas Purchase Contracts between TransCanada and Great Lakes [1] and were filed with the Commission in Great Lakes' prior PGA filings. Great Lakes states that in accordance with the methodology described in the price adjustment provisions, the monthly demand charges related to the gas cost component will change from $12.48 per Mcf to $12.81 per Mcf. This change relates to a change in TransCanada's monthly demand toll as set by the National Energy Board of Canada. Great Lakes also states that in accordance with the contract, the commodity charge is also changed from $1.9633 to $1.9525 per MMBtu for purchases up to 62.5% of daily contract quantity ("DCQ") and from $1.82420 to $1.8134 per MMBtu for purchases in excess of 62.5% of DCQ up to 100% of DCQ. The net effect of these changes is that the 100% load factor rate will stay the same.

The changes in the gas purchase prices applicable to NMU reflect a price decrease in the purchased gas component of the commodity charge for deliveries within contract demand from $1.60 to $1.40 per MMBtu and a reduction in the purchased gas component of the overrun charge from $1.56 to $1.363 per MMBtu. These pricing changes are effective for the month of September, 1987. Great Lakes states that these gas purchase price reductions result from recent negotiations between TransCanada and NMU, which Great Lakes is hereby implementing.

The gas purchase price applicable to Peoples has changed from $2.39780 per MMBtu to $2.52870 per MMBtu pursuant to a pricing index previously approved by the Commission.

Great Lakes is requesting an effective date of September 1, 1987 for Eighth Revised Sheet Nos. 57(i) and 57(ii). Great Lakes requests waiver of the 30-day notice requirement of the provisions of § 154.38(d)(4)(iv)(a) of the Commission's Regulations so as to permit this out-of-period PGA filing to implement the foregoing changes in purchased gas cost as soon as possible.

Any person desiring to be heard or to protest said filing should file a motion to intervene or protest with the Federal Energy Regulatory Commission, 825 North Capitol Street NE., Washington, DC 20426, in accordance with Rules 211 and 214 of the Commission's Rules of Practice and Procedure. All such motions or protests should be filed on or before September 24, 1987. Protests will be considered by the Commission in determining the appropriate action to be taken, but will not serve to make protestants parties to the proceeding. Copies of this filing are on file with the Commission and are available for public inspection.

Kenneth F. Plumb,

Secretary.

[FR Doc. 87-21881 Filed 9-22-87; 8:45 am]

BILLING CODE 6717-01-M

[1] Application for "unbundling" the Gas Purchase Contract to allow MichCon to directly purchase gas from TransCanada is presently pending with the FERC in Docket No. CP86-696-000.

[Docket No. RP87-135-000]

Proposed Changes in FERC Gas Tariff; High Island Offshore System

September 17, 1987.

Take notice that on September 1, 1987 High Island Offshore System ("HIOS") tendered for filing the following tariff sheets to its FERC Gas Tariff, Original Volume No. 1:

Eighteenth Revised Sheet No. 4
First Revised Sheet No. 5
Original Sheet No. 5-A

HIOS states that the filing reflects an annual charge unit rate adjustment which is designed to permit HIOS to recoup the annual charges assessed it by the Commission for the fiscal year ending September 30, 1987 in accordance with the Omnibus Budget Reconciliation Act of 1986. HIOS proposes an October 1, 1987 effective date.

Any person desiring to be heard or to protest said filing should file a motion to intervene or protest with the Federal Energy Regulatory Commission, 825 North Capitol Street NW., Washington, DC 20426, in accordance with Rules 211 and 214 of the Commission's Rules of Practice and Procedure (18 CFR 385.211, 385.214). All such motions or protests should be filed on or before September 24, 1987. Protests will be considered by the Commission in determining the appropriate action to be taken but will not serve to make protestants parties to the proceedings. Any person wishing to become a party to the proceeding must file a motion to intervene. Copies of this filing are on file with the Commission and are available for public inspection.

Kenneth F. Plumb,

Secretary.

[FR Doc. 87-21877 Filed 9-22-87; 8:45 am]

BILLING CODE 6717-01-M

[Docket No. RP87-100-000]

Tariff Filing; Mountain Fuel Resources, Inc.

September 17, 1987.

Take notice that on August 31, 1987, Mountain Fuel Resources, Inc. (MFR), pursuant to 18 CFR 154.38(d)(6) and Part 382 of the Commission's regulations, tendered for filing and acceptance revised tariff sheets to its FERC Gas Tariff as follows:

First Revised Volume No. 1

Second Revised Sheet No. 1
Ninth Revised Sheet No. 12
Original Sheet No. 70-A

Original Volume No. 1-A

Second Revised Sheet No. 5
First Revised Sheet Nos. 20, 43, 67, 79, and 111
Second Revised Sheet Nos. 117 and 132

Original Volume No. 3

Fifth Revised Sheet No. 8

MFR states that the purpose of this filing is to add language to its FERC Gas Tariff to provide for an Annual Charge Adjustment (ACA) clause, and to implement the annual charge unit rate of $0.00196/Dth in each of its rate schedules applicable to sales and transportation. MFR requests an effective date of October 1, 1987, for all tendered tariff sheets.

Copies of the filing were served upon MFR's jurisdictional customers and the Public Service Commissions of Utah and Wyoming.

Any person desiring to be heard or to protest said filing should file a motion to intervene or a protest with the Federal Energy Regulatory Commission, 825 North Capitol Street, NE., Washington, DC 20426, in accordance with Rules 211 and 214 of the Commission's Rules of

Practice and Procedure (18 CFR 385.211, 385.214). All such motions or protests should be filed on or before September 24, 1987. Protests will be considered by the Commission in determining the appropriate action to be taken, but will not serve to make protestants parties to the proceeding. Any person wishing to become a party must file a motion to intervene. Copies of this filing are on file with the Commission and are available for public inspection.

Kenneth F. Plumb,

Secretary.

[FR Doc. 87-21884 Filed 9-22-87; 8:45 am]

BILLING CODE 6717-01-M

[Docket No. RP87-141-000]

Proposed Changes in FERC Gas Tariff; Natural Gas Pipeline Co. of America

September 17, 1987.

Take notice that on September 15, 1987, Natural Gas Pipeline Company of America (Natural) tendered for filing the below listed tariff sheets to be a part of its FERC Gas Tariff, Third Revised Volume No. 1:

Thirty-fifth Revised Sheet No. 5A
Seventh Revised Sheet No. 8
Fourth Revised Sheet No. 13
First Revised Sheet No. 127
Original Sheet Nos. 157 through 165
Twenty-fifth Revised Sheet No. 301
Twenty-third Revised Sheet Nos. 302 and 305
Twenty-fourth Revised Sheet Nos. 303 and 304
Tenth Revised Sheet Nos. 306 and 309
Eleventh Revised Sheet Nos. 307 and 308

Natural states that the purpose of these sheets is to: (1) Institute an Inventory Holding Charge provision (Section 31) in Natural's Tariff, and (2) change the effective date for volumes nominated pursuant to Section 22 of the General Terms and Conditions. The Inventory Holding Charge provision when accepted and permitted to become effective will apply to Natural's customers purchasing gas under Rate Schedules DMQ-1 and G-1. It will provide a mechanism whereby Natural can recover the costs of maintaining a gas supply inventory to meet peak day, monthly and annual service levels nominated by its Rate Schedules DMQ-1 and G-1 customers. The provision also includes an Exit Fee applicable to a customer leaving the system or reducing its nominations. Natural further states that the proposed Inventory Holding Charge mechanism submitted adheres to the four (4) principles which the Commission outlined in Order No. 500 to be used as a guide in structuring an Inventory Holding Charge.

Natural requested waiver of the Commission's Regulations to the extent necessary to permit the tariff sheets to become effective November 1, 1987.

A copy of this filing is being mailed to Natural's jurisdictional customers and interested state regulatory agencies.

Any person desiring to be heard or to protest said filing should file a motion to intervene or protest with the Federal Energy Regulatory Commission, 825 North Capitol Street, NE., Washington, DC 20426, in accordance with §§ 385.211 and 385.214. All such motions or protests must be filed on or before September 24, 1987. Protests will be considered by the Commission in determining the appropriate action to be taken, but will not serve to make protestants parties to the proceeding. Any person wishing to become a party must file a motion to intervene. Copies of this filing are on file with the Commission and are available for public inspection.

Kenneth F. Plumb,

Secretary.

[FR Doc. 87-21878 Filed 9-22-87; 8:45 am]

BILLING CODE 6717-01-M

[Docket No. RP87-99-000]

Change in Rates and Tariff Revisions; Northern Natural Gas Co., Division of Enron Corp.

September 17, 1987.

Take notice that on August 31, 1987, Northern National Gas Company, Division of Enron Corp. (Northern), tendered for filing with the Commission to be effective October 1, 1987 the following tariff sheets to be included in Northern's FERC Gas Tariff:

Third Revised Volume No. 1

Forty-Seventh Revised Sheet No. 4b
Fifteenth Revised Sheet No. 4b.1
Second Revised Sheet No. 4g
Third Revised Sheet No. 4g.1
Second Revised Sheet No. 4g.2
First Revised Sheet No. 52c.5
First Revised Sheet No. 52f.6
Fourth Revised Sheet No. 72

Original Volume No. 2

Fifty-Fourth Revised Sheet No. 1c
Second Revised Sheet No. 1k

Northern states that the purpose of the revised tariff sheets is to adjust its jurisdictional natural gas sales and transportation rates to reflect the annual charge adjustment (ACA) unit charge, as authorized by the Commission for the fiscal year beginning October 1, 1987. An ACA unit charge of $0.0021 per Mcf will be added to each of Northern's rate schedules applicable to sales or transportation deliveries.

Copies of the filing were served on all of Northern's jurisdictional customers and state commissions.

Any person desiring to be heard or to protest said filing should file a motion to intervene or a protest with the Federal Energy Regulatory Commission, 825 North Capitol Street NE., Washington, DC 20426, in accordance with the Commission's Rules of Practice and Procedure (18 CFR 385.211, 385.214). All such motions or protests should be filed on or before September 24, 1987. Protests will be considered by the Commission in determining the appropriate action to be taken, but will not serve to make protestants parties to the proceeding. Any person wishing to become a party must file a motion to intervene. Copies of this filing are on file with the Commission and are available for public inspection.

Kenneth F. Plumb,

Secretary.

[FR Doc. 87-21883 Filed 9-22-87; 8:45 am]

BILLING CODE 6717-01-M

ENVIRONMENTAL PROTECTION AGENCY

[OPP-36146; FRL-3263-4]

Publication of Addenda on Data Reporting to Pesticide Assessment Guidelines; Availability

AGENCY: Environmental Protection Agency (EPA).

ACTION: Notice of availability.

SUMMARY: Addenda to the Pesticide Assessment Guidelines for certain studies have been finalized and are now available to the public from the National Technical Information Service (NTIS). The studies involved are: nature of the residue: Plants, terrestrial field dissipation, and aquatic testing for marine/estuarine and freshwater fish and invertebrates. The addenda supersede paragraphs in the Guidelines on data reporting and provide a format for the preparation of study reports by those submitting data to EPA. While these Guidelines are not mandatory at this time, data submitters are encouraged to follow the format so that reports will be consistent, thereby increasing the efficiency of pesticide registration and other regulatory activities.

ADDRESS: Guidelines can be ordered from: National Technical Information Service, ATTN: Order Desk, 5285 Port Royal Road, Springfield, VA 22161, (703-487-4650).

FOR FURTHER INFORMATION CONTACT: Elizabeth M.K. Leovey, Hazard Evaluation Division (TS-769C), Office of Pesticide Programs, Environmental Protection Agency, 401 M Street, SW., Washington, DC 20460 Office location and telephone number: Room 703B, Crystal Mall #2, 1921 Jefferson Davis Highway, Arlington, VA, (703-557-2162).

SUPPLEMENTARY INFORMATION: The specific addenda, with NTIS order number and price, currently available from NTIS are as follows.

Document title	NTIS document No.	EPA document No.	Price
Pesticide Assessment Guidelines Subdivision E Hazard Evaluation:			
Wildlife and Aquatic Organisms Aquatic Testing for Marine/ Estuarine and Freshwater Fish and Invertebrates Addendum 2 on Data Reporting.	PB87-207700	540/09-87-198	$13.95
Pesticide Assessment Guidelines Subdivision N Chemistry:			
Environmental Fate Terrestrial Field Dissipation Studies Addendum 2 on Data Reporting	PB87-208393	540/09-87-200	9.95
Pesticide Assessment Guidelines Subdivision O Hazard Evaluation:			
Residue Chemistry Nature of the Residue: Plants Addendum 3 on Data Reporting	PB87-208641	540/09-87-199	9.95

This is the second set of Data Reporting Guidelines published by the Agency. Publication of the previous set was announced in the **Federal Register** of November 26, 1986 (51 FR 42931). These documents were reviewed by the U.S. Department of Agriculture, the Food and Drug Administration, and other organizations within EPA. They were discussed by the FIFRA Science Advisory Panel in a public meeting on May 22, 1986, and underwent public comment announced in the **Federal Register** of May 21, 1986 (51 FR 18660). The documents were revised to reflect consideration of these comments and the public comments are addressed in the documents.

Orders may be placed by mail or telephone. All orders should specify whether the document is requested in hard copy or microfiche form since prices vary for hard copy but are a consistent $6.50 for the microfiche. There is an additional $3.00 handling charge for each order. Payment may be made by charging against an NTIS deposit account; charging to VISA, MasterCard, or American Express; or by check or money order. In all orders, the document title, NTIS order number of the document, desired form of the document (microfiche or hard copy), and the price must be stated.

Data Reporting Guidelines for the remaining major studies in the Pesticide Assessment Guidelines will also be published. Publication will be announced in the **Federal Register**.

Dated: September 8, 1987.

Stephen L. Johnson,

Acting Director, Hazard Evaluation Division, Office of Pesticide Programs.

[FR Doc. 87-21606 Filed 9-22-87; 8:45 am]

BILLING CODE 6560-50-M

[FRL-3265-7]

State Capacity Assurance Project

EPA has issued a grant for $1.2 million to the National Governors Association to help implement Section 104(k) of the Superfund Amendments and Reauthorization Act. This provision requires states to provide assurances to EPA by October 1989 that they have sufficient capacity to destroy, treat, or dispose of hazardous waste reasonably expected to be generated within their borders for the next 20 years. Superfund remedial action funding may be withheld from states that do not provide such assurances.

The NGA will convene four workgroups to address requirements for: (1) Data on waste generation and capacity, (2) waste minimization programs and their effects on waste generation, (3) interstate shipments of wastes and interstate planning, and (4) long-term facility planning. The workgroups will be composed of representatives from states, industry, environmental groups, and local government organizations. The NGA will develop state-recommended guidance by November 1988. EPA will use the NGA recommendations in developing guidance for states to follow when providing their section 104(k) assurances.

For further information on the "State Capacity Assurance Project" contact Malcolm Bliss at EPA (202/382-4677).

Thomas W. Devine,

Director, Office of Program Management and Technology, OSWER.

[FR Doc. 87-21942 Filed 9-22-87; 8:45 am]

BILLING CODE 6560-50-M

FEDERAL COMMUNICATIONS COMMISSION

Public Information Collection Requirement Submitted to the Office of Management and Budget for Review

September 15, 1987.

The Federal Communications Commission has submitted the following information collection requirement to OMB for review and clearance under the Paperwork Reduction Act of 1980, 44 U.S.C. 3507.

Copies of this submission may be purchased from the Commission's duplicating contractor, International Transcription Service, 2100 M Street NW., Suite 140, Washington, DC 20037, or telephone (202) 857-3815. Persons wishing to comment on an information collection should contact J. Timothy Sprehe, Office of Management and Budget, Room 3235 NEOB, Washington, DC 20503, telephone (202) 395-4814. Copies of these comments should also be sent to the Commission. For further information contact Terry Johnson, Federal Communications Commission, telephone (202) 632-7513.

OMB No.: 3060-0029

Title: Application for New Broadcast Station License

Form No.: FCC 302

Action: Revision

Respondents: Business, Small Business, Non-profit Institutions

Frequency of Response: On occasion

Estimated Annual Burden: 1,110 Responses; 298,525 Hours.

Needs and Uses: Filing is required to apply for an AM, FM or TV broadcast station license. The data is used to confirm that the station has been built to terms specified in the outstanding construction permit, and is included in the license to operate the station.

Federal Communications Commission.

William J. Tricarico,

Secretary.

[FR Doc. 87-21867 Filed 9-22-87; 8:45 am]

BILLING CODE 6712-01-M

FEDERAL MARITIME COMMISSION

Agreement(s) Filed

The Federal Maritime Commission hereby gives notice of the filing of the following agreement(s) pursuant to section 5 of the Shipping Act of 1984.

Interested parties may inspect and obtain a copy of each agreement at the Washington, DC Office of the Federal Maritime Commission, 1100 L Street NW., Room 10325. Interested parties may submit comments on each agreement to the Secretary, Federal Maritime Commission, Washington, DC 20573, within 10 days after the date of the **Federal Register** in which this notice appears. The requirements for comments are found in § 572.603 of Title 46 of the Code of Federal Regulations. Interested persons should consult this section before communicating with the Commission regarding a pending agreement.

Agreement No.: 207–010137–012.
Title: Barber Blue Sea Agreement.
Parties:

Ocean Transport and Trading PLC
Rederiaktiebolaget Transatlantic
Wilh. Wilhelmsen Limited A/S
Scanbarber A/S

Synopsis: The proposed amendment would permit the parties to receive or pay contributions to cover the profits and losses of the joint service's administrator or its subsidiaries for its operations generally or with respect to any agency functions.

Agreement No.: 203–011075–004.
Title: Central America Discussion Agreement.
Parties:

United States/Central America Liner Association
Marine Bulk Carriers, Inc.
Nordana Line, Inc.
Concorde Shipping Inc.
Nexos Line
Thompson Shipping Co., Ltd.

Synopsis The proposed amendment would add Maritima Juno, S.A. as a party to the agreement and would restate the agreement. The parties have requested a shortened review period.

By Order of the Federal Maritime Commission.

Tony P. Kominoth,

Assistant Secretary.

Dated: September 18, 1987.

[FR Doc. 87–21904 Filed 9–22–87; 8:45 am]

BILLING CODE 6730–01–M

Agreement(s) Filed; Tropical Shipping and Construction, Ltd.

The Federal Maritime Commission hereby gives notice of the filing of the following agreement(s) pursuant to section 5 of the Shipping Act of 1984.

Interested parties may inspect and obtain a copy of each agreement at the Washington, DC Office of the Federal Maritime Commission, 1100 L Street, NW., Room 10325. Interested parties may submit comments on each agreement to the Secretary, Federal Maritime Commission, Washington, DC 20573, within 10 days after the date of the **Federal Register** in which this notice appears. The requirements for comments are found in § 572.603 of Title 46 of the Code of Federal Regulations. Interested persons should consult this section before communicating with the Commission regarding a pending agreement.

Agreement No.: 224–200033
Title: Virgin Islands Port Authority Terminal Agreement
Parties: Virgin Islands Port Authority
Tropical Shipping and Construction, Ltd., (Tropical)
Synopsis: The proposed agreement would lease two lots in the Third Port area of the St. Croix marine facilities to Tropical for office trailers used by personnel engaged in Tropical trucking and shipping operations at the Port.

By Order of the Federal Maritime Commission.

Dated: September 18, 1987.

Tony P. Kominoth,

Assistant Secretary.

[FR Doc. 87–21928 Filed 9–22–87; 8:45 am]

BILLING CODE 6730–01–M

Ocean Freight Forwarder License; Reissuance EX-IM; Business Services Corp.

Notice is hereby given that the following ocean freight forwarder license has been reissued by the Federal Maritime Commission pursuant to section 19 of the Shipping Act of 1984 (46 U.S.C. app. 1718) and the regulations of the Commission pertaining to the licensing of ocean freight forwarders, 46 CFR Part 510.

License No.	Name/Address	Date reissued
2793–R	EX-IM Business Services Corporation, Ste 320 1st Ave. Bld., 411 First Avenue SE., Cedar Rapids, IA 52401.	July 13, 1987.

Robert G. Drew,

Director, Bureau of Domestic Regulation.

[FR Doc. 87–21929 Filed 9–22–87; 8:45 am]

BILLING CODE 6730–01–M

Ocean Freight Forwarder License; Revocations; Matsukawa and Associates, et al

Notice is hereby given that the following ocean freight forwarder licenses have been revoked by the Federal Maritime Commission pursuant to section 19 of the Shipping Act of 1984 (49 U.S.C. app. 1718) and the regulations of the Commission pertaining to the licensing of ocean freight forwarders, 46 CFR Part 510.

License Number: 1336
Name: Matsukawa & Associates
Address: 311 S. Spring Street, Suite 602, Los Angeles, CA 90013
Date Revoked: June 12, 1987
Reason: Business had closed

License Number: 2968
Name: A&B Transportation Services, Inc. dba, Gateway International
Address: 80 Yesler Way, Seattle, WA 98104
Date Revoked: June 25, 1987
Reason: Surrendered license voluntarily

License Number: 227
Name: H.L. Ziegler, Inc.
Address: 10777 NW Freeway, Suite 500, P.O. Box 53180, Houston, TX 77052
Date Revoked: June 30, 1987
Reason: Surrendered license voluntarily

License Number: 1064
Name: E.L. Mobley, Inc.
Address: P.O. Box 1686, 21 East Bay Street, Savannah, GA 31402
Date Revoked: July 9, 1987
Reason: Surrendered license voluntarily

License Number: 2184
Name: Kronos International Shippers, Inc.
Address: 775 West Jackson Blvd., Chicago, IL 60606
Date Revoked: August 6, 1987
Reason: Failed to maintain a valid surety bond

License Number: 853
Name: S.A. McClennan Co.
Address: 306 Board of Trade Bldg., DuLuth, MN 55802
Date Revoked: August 14, 1987
Reason: Failed to maintain a valid surety bond

License Number: 1566
Name: Nationwide International Forwarders & Brokers, Inc.
Address: 4795 NW. 72nd Ave., Miami, FL 33166
Date Revoked: September 3, 1987
Reason: Failed to maintain a valid surety bond

License Number: 2125
Name: Cargo Transport Corp.
Address: 959 Pleasantville Dr., Houston, TX 77029
Date Revoked: September 4, 1987
Reason: Surrendered license voluntarily

License Number: 2678
Name: Sauter Corp.
Address: 633 Matzinger Road, Toledo, OH 46312
Date Revoked: September 7, 1987
Reason: Failed to maintain a valid surety bond

License Number: 966
Name: Abarim Freight Service, Inc.
Address: 120 Kero Road, Carlstadt, NJ 07072
Date Revoked: September 4, 1987
Reason: Failed to maintain a valid surety bond

Robert G. Drew,
Director, Bureau of Domestic Regulation.
[FR Doc. 87-21930 Filed 9-22-87; 11:21 am]
BILLING CODE 6730-01-M

DEPARTMENT OF THE INTERIOR

Bureau of Land Management

[NV-020-07-4212-24; N-45098]

Airport Lease Application; Double Four Corp., Nevada

ACTION: Notice of Airport Lease Application N-54098; Amendment to Legal Description.

DATE: September 15, 1987.

FOR FURTHER INFORMATION CONTACT: Hal Green, District Realty Specialist, Winnemucca District Office, Bureau of Land Management, 705 East Fourth Street, Winnemucca, NV 89445, (702) 623-3676.

SUMMARY: Notice is hereby given that the Notice that appeared in the **Federal Register**, Vol. 52, No. 10, Thursday, January 15, 1987, is hereby amended to add the following:

Mount Diablo Meridian, Nevada

T. 47 N., R. 30 E., Section 9, W½SW¼SW¼NE¼, W½NW¼SE¼, W½SW¼SE¼, W½SE¼SW¼SE¼.

Section 17, S½S½SE¼NE¼, N½N½NE¼SE¼.

The area described (including original notice) contains 302.5 acres and is located in Humbolt County, Nevada.

SUPPLEMENTARY INFORMATION: Segregation of public lands.

The application was filed on October 15, 1986, and on that date the above described land was segregated from all other forms of appropriation under the public land laws.

Dated: September 15, 1987.

Frank C. Shields,
District Manager, Winnemucca.
[FR Doc. 87-21871 Filed 9-22-87; 8:45 am]
BILLING CODE 4310-HC-M

[AK-968-4213-15; AA-11153-29]

Alaska Native Claims Selection; Cook Inlet Region, Inc.

In accordance with Departmental regulation 43 CFR 2650.7(d), notice is hereby given that a decision to issue conveyance under the provisions of section 14(e) of the Alaska Native Claims Settlement Act of December 18, 1971, 43 U.S.C. 1601, 1613(e), will be issued to Cook Inlet Region, Inc. for approximately 6,855 acres. The lands involved are in Tps. 1 and 2 N., R. 11 W., Seward Meridian, Alaska.

A notice of the decision will be published once a week, for four (4) consecutive weeks, in the ANCHORAGE DAILY NEWS. Copies of the decision may be obtained by contacting the Bureau of Land Management, Alaska State Office, 701 C Street, Box 13, Anchorage, Alaska 99513 ((907) 271-5960).

Any party claiming a property interest which is adversely affected by the decision, an agency of the Federal government, of regional corporation, shall have until October 23, 1987, to file an appeal. However, parties receiving service by certified mail shall have 30 days from the date or receipt to file an appeal. Appeals must be filed in the Bureau of Land Management, Division of Conveyance Management (960), address identified above, where the requirements for filing an appeal may be obtained. Parties who do not file an appeal in accordance with the requirements of 43 CFR Part 4, Subpart E, shall be deemed to have waived their rights.

Olivia Short,
Chief, Branch of Cook Inlet and Ahtna Adjudication.
[FR Doc. 87-21863 Filed 9-22-87; 8:45 am]
BILLING CODE 4310-JA-M

[NV-060-4132-02]

Battle Mountain District Advisory Council Meeting; Battle Mountain, NV

SUMMARY: Notice is hereby given in accordance with Public Law 94-579 and 43 CFR Part 1780 that a meeting of the Battle Mountain District Advisory Council will be held on Tuesday, October 27, 1987. The meeting will convene at 9:00 a.m. in the Shoshone-Eureka Conference Room at the Battle Mountain District Office in Battle Mountain, Nevada.

SUPPLEMENTARY INFORMATION: The agenda for the meeting will include:

1. Riparian Management
   a. Strategy
   b. Current situation and policy
   c. Misconceptions
2. Rangeland monitoring proposal for Carico Lake Allotment
3. Tour of Battle Mountain Gold

The meeting is open to the public. Interested persons may make oral statements between 1:00 and 1:30 p.m. on October 27, 1987. If you wish to make an oral statement, please contact Terry L. Plummer by 4:30 p.m., October 23, 1987.

FOR FURTHER INFORMATION CONTACT: Terry L. Plummer, District Manager, P.O. Box 1420, Battle Mountain, Nevada 89820 or phone (702) 635-5181.

Date Signed: September 15, 1987.

Terry L. Plummer,
Battle Mountain, Nevada.
[FR Doc. 87-21890 Filed 9-22-87; 8:45 am]
BILLING CODE 4310-HC-M

[U-41186]

Proposed Reinstatement of Terminated Oil and Gas Lease; Utah

In accordance with Title IV of the Federal Oil and Gas Royalty Management Act (Pub. L. 97-451), a petition for reinstatement of oil and gas lease U-41186 for lands in Summit County, Utah, was timely filed and required rentals and royalties accruing from June 1, 1987, the date of termination, have been paid.

The lessee has agreed to new lease terms for rentals and royalties at rates of $5 per acre and 16⅔ percent, respectively. The $500 administrative fee has been paid and the lessee has reimbursed the Bureau of Land Management for the cost of publishing this notice.

Having met all the requirements for reinstatement of lease U-41186 as set out in section 31(d) and (e) of the Mineral Leasing Act of 1920 (30 U.S.C. 188), the Bureau of Land Management is proposing to reinstate the lease, effective June 1, 1987, subject to the original terms and conditions of the lease and the increased rental and royalty rates cited above.

W.R. Papworth,
Deputy State Director, Operations.
[FR Doc. 87-21862 Filed 9-22-87; 8:45 am]
BILLING CODE 4310-DQ-M

Bureau of Reclamation

Colorado River Basin Salinity Control Advisory Council; Meeting

AGENCY: Bureau of Reclamation, Interior.

ACTION: Notice of public meeting.

SUMMARY: In accordance with section 10(a)(2) of the Federal Advisory Committee Act (Pub. L. 92-463), notice is hereby made of a meeting of the Colorado River Basin Salinity Control Advisory Council.

DATES: The meeting begins on Tuesday, October 27, 1987, at 1:00 p.m. and reconvenes on Wednesday, October 28, 1987.

ADDRESS: The meeting will be held at the Ramada Inn Foothills, 6944 East Tanque Verde Road, Tucson, Arizona 85715.

FOR FURTHER INFORMATION CONTACT: Mr. Al R. Jonez, Chief, Colorado River Quality Office, Bureau of Reclamation, D-1000, Engineering and Research Center, P.O. Box 25007, Denver, Colorado 80225.

SUPPLEMENTARY INFORMATION: Council members will be briefed on the status of salinity control activities and receive input for drafting the Council's annual report. The Department of the Interior, Department of Agriculture, and Environmental Protection Agency will each present a progress report and schedule of activities on salinity control in the Colorado River Basin. The Council will discuss Colorado River Basin Salinity Control activities and content of their annual report.

Any member of the public may file a written statement with the Council before, during, or after the meeting in person or by mail. To the extent that time permits, the Council chairman may allow public presentation of oral statements at the meeting.

Dated: September 16, 1987.

J. Austin Burke,

Commissioner.

[FR Doc. 87-21812 Filed 9-22-87; 8:45 am]

BILLING CODE 4310-09-M

INTERNATIONAL TRADE COMMISSION

[Investigation No. 731-TA-383 (Preliminary)]

Import Investigation; Bimetallic Cylinders From Japan

Determination

On the basis of the record [1] developed in the subject investigation, the Commission determines,[2] pursuant to section 733(a) of the Tariff Act of 1930 (19 U.S.C. 1673b(a)), that there is a reasonable indication that an industry in the United States is threatened with material injury by reason of imports from Japan of certain bimetallic cylinders,[3] provided for in item 678.35 of the Tariff Schedules of the United States, that are alleged to be sold in the United States at less than fair value (LTFV).

Background

On August 4, 1987, a petition was filed with the Commission and the Department of Commerce by counsel on behalf of Xaloy, Inc., Pulaski, VA, and Bimex Corp., Wales, WI, alleging that an industry in the United States is materially injured and threatened with material injury by reason of LTFV imports of certain bimetallic cylinders from Japan. Accordingly, effective August 4, 1987, the Commission instituted preliminary antidumping investigation No. 731-TA-383 (Preliminary).

Notice of the institution of the Commission's investigation and of a public conference to be held in connection therewith was given by posting copies of the notice in the Office of the Secretary, U.S. International Trade Commission, Washington, DC, and by publishing the notice in the **Federal Register** of August 12, 1987 (52 FR 29900). The conference was held in Washington, DC, on August 28, 1987, and all persons who requested the opportunity were permitted to appear in person or by counsel.

The Commission transmitted its determination in this investigation to the Secretary of Commerce on September 18, 1987. The views of the Commission are contained in USITC Publication 2017 (September 1987), entitled "Certain Bimetallic Cylinders from Japan: Determination of the Commission in Investigation No. 731-TA-383 (Preliminary) Under the Tariff Act of 1930, Together With the Information Obtained in the Investigation."

By order of the Commission.

Issued: September 18, 1987.

Kenneth R. Mason,

Secretary.

[FR Doc. 87-21962 Filed 9-22-87; 8:45 am]

BILLING CODE 7020-02-M

[1] The record is defined in § 207.2(i) of the Commission's Rules of Practice and Procedure (19 CFR 207.2(i)).

[2] Chairman Liebeler dissenting.

[3] Such items consist of an outer shell of steel and an inner lining of an alloy which are metallurgically bonded, and are, if imported, reported under items 678.3570 and 678.3575 of the Tariff Schedules of the United States Annotated.

[Investigation No. 377-TA-260]

Import Investigation; Commission Determination Not To Review Initial Determination Finding Certain Respondents In Default; Certain Feathered Fur Coats and Pelts, and Process For the Manufacture Thereof

AGENCY: U.S. International Trade Commission.

ACTION: Nonreview of initial determination (ID) finding certain respondents in default and imposing procedural sanctions.

SUMMARY: Notice is hereby given that the Commission has determined not to review the presiding administrative law judge's (ALJ) ID finding respondents Asia Fur Co. (Asia Fur), Peking Fur Store, Ltd. (Peking Fur), Excelsior Fur Co., Ltd. (Excelsior), China National Produce and Animal By-Products Export and Import Corp. (China National), Sunry Import Export Corp. (Sunry), and E. Vassou Brothers, Inc. (Vassou) in default in the above-captioned investigation.

FOR FURTHER INFORMATION CONTACT: Randi S. Field, Esq., Office of the General Counsel, U.S. International Trade Commission, telephone 202-525-0261.

SUPPLEMENTARY INFORMATION: On July 31, 1987, the ALJ issued an order (Order No. 25) ordering the above-named respondents to show cause why they should not be held in default. Only Asia Fur and Peking Fur filed responses to Order No. 25. The ALJ found their responses did not show the good cause necessary to support a finding that these respondents should not be found in default. On August 14, 1987, the ALJ issued an ID (Order No. 26) finding respondents Asia Fur, Peking Fur, Excelsior, China National, Sunry, and Vassou in default pursuant to Commission rule 210.25 (19 CFR 210.25) and that these six respondents have waived: (1) Their right to appear; (2) their right to be served with documents; and (3) their right to contest the allegations at issue in the investigation. No petitions for review or comments from Government agencies concerning the ID were received.

This action is taken under the authority of section 337 of the Tariff Act of 1930 (19 U.S.C. 1337) and Commission rules 210.53-210.55 (19 CFR 210.53-210.55).

Copies of the ID and all other non-confidential documents filed in connection with this investigation are available for inspection during official business hours (8:45 a.m. to 5:15 p.m.) in the Office of the Secretary, U.S. International Trade Commission, 701 E Street NW., Washington, DC 20436, telephone 202-523-0161. Hearing-impaired persons are advised that information on the matter can be obtained by contacting the Commission's TDD terminal on 202-724-0002.

By order of the Commission.

Issued: September 14, 1987.

Kenneth R. Mason,

Secretary.

[FR Doc. 87-21963 Filed 9-22-87; 8:45 am]

BILLING CODE 7020-02-M

[Investigations Nos. 701-TA-288 and 289 (Preliminary) and 731-TA-381 and 382 (Preliminary)]

Certain Granite From Italy and Spain

Determinations

On the basis of the record [1] developed in the subject investigations, the Commission unanimously determines, pursuant to section 703(a) of the Tariff Act of 1930 (19 U.S.C. 1671b(a)), that there is a reasonable indication that an industry in the United States is materially injured or threatened with material injury [2] by reason of imports from Italy and Spain of certain granite,[3] provided for in item 513.74 of the Tariff Schedules of the United States, that are alleged to be subsidized by the Governments of Italy and Spain.

Further, the Commission unanimously determines, pursuant to section 733(a) of the Tariff Act of 1930 (19 U.S.C. 1673b(a)), that there is a reasonable indication that an industry in the United States is materially injured or threatened with material injury [2] by reason of imports from Italy and Spain of certain granite,[3] provided for in item 513.74 of the Tariff Schedules of the United States, that are alleged to be sold in the United States at less than fair value.

Background

On July 28, 1987, a petition was filed with the Commission and the Department of Commerce by the Ad Hoc Granite Trade Group, alleging that an industry in the United States is materially injured and threatened with material injury by reason of subsidized imports of certain granite from Italy and Spain, and by imports of certain granite from Italy and Spain which are being sold in the United States at less than fair value. Accordingly, effective July 28, 1987, the Commission instituted preliminary countervailing duty investigations Nos. 701-TA-288 and 289 (Preliminary) and antidumping investigations Nos. 731-TA-381 and 382 (Preliminary).

Notice of the institution of the Commission's investigations and of a public conference to be held in connection therewith was given by posting copies of the notice in the Office of the Secretary, U.S. International Trade Commission, Washington, DC, and by publishing the notice in the **Federal Register** of August 5, 1987 (52 FR 29080). The conference was held in Washington, DC, on August 18, 1987, and all persons who requested the opportunity were permitted to appear in person or by counsel.

The Commission transmitted its determinations in these investigations to the Secretary of Commerce on September 11, 1987. The views of the Commission are contained in USITC Publication 2016 (September 1987), entitled "Certain Granite from Italy and Spain: Determinations of the Commission in Investigations Nos. 701-TA-288 and 289 (Preliminary) and Investigations Nos. 731-TA-381 and 382 (Preliminary) Under the Tariff Act of 1930, Together With the Information Obtained in the Investigations."

By order of the Commission.

Issued: September 11, 1987.

Kenneth R. Mason,

Secretary.

[FR Doc. 87-21964 Filed 9-22-87; 8:45 am]

BILLING CODE 7020-02-M

[Investigation No. 337-TA-258]

Commission Decision Not to Review an Initial Determination Terminating Investigation and Deferral of Decision on Recommendations; Certain Moldable/Extrudable Polyetheresteramide Copolymers

AGENCY: U.S. International Trade Commission.

ACTION: Commission decision not to review an initial determination terminating the investigation and to defer a decision on certain recommendations.

SUMMARY: Notice is hereby given that the Commission has determined not to review the initial determiantion (ID) (Order No. 8) issued by the presiding administrative law judge (ALJ) in the above-captioned investigation granting a joint motion to withdraw the complainant and dismissing the complaint (and thus the investigation) with prejudice. The Commission has also decided to defer a decision on whether to take any action on the three recommedations made by the ALJ in the ID. The dismissal with prejudice does not constitute a determination on the merits of whether there is a violation of section 337. In particular, it does not constitute a determination of validity or infringement with respect to the patent in controversy.

FOR FURTHER INFORMATION CONTACT: Wayne Herrington, Esq., Office of the General Counsel, U.S. International Trade Commission, telephone 202-523-3395.

SUPPLEMENTARY INFORMATION: On July 15, 1987, the presiding ALJ issued an ID (Order No. 8) which granted a joint motion to withdraw the complaint in the investigation and dismissed the complaint with prejudice. The effect of this ID would be to terminate the investigation. The ID also recommended that the Commission investigate certain matters with respect to the complaint and a previously denied motion to terminate the investigation on the basis of a settlement agreement. Both complainant and respondents filed requests for reconsideration of the ID. Complainant also filed a petition for review of the ID. The Commission delayed action on the ID and petition for review until 30 days after the ALJ ruled on the requests for reconsideration. On August 17, 1987, the ALJ denied the requests for reconsideration.

This action is taken under authority of section 337 of the Tariff Act of 1930 and § 210.53(h) of the Commission's Rules of Practice and Procedure (19 U.S.C. 1337; 19 CFR 210.53(h)).

Copies of all nonconfidential documents filed in connection with this investigation are available for inspection during official business hours (8:45 a.m. to 5:15 p.m.) in the Office of the Secretary, U.S. International Trade Commission, 701 E Street NW., Washington, DC 20436, telephone 202-523-0161.

Hearing-impaired individuals are advised that information on this matter can be obtained by contacting the Commission's TDD terminal on 202-724-0002.

By order of the Commission.

Issued: September 15, 1987.

Kenneth M. Mason,

Secretary.

[FR Doc. 87-21965 Filed 9-22-87; 8:45 am]

BILLING CODE 7020-02-M

---

[1] The record is defined in § 207.2(i) of the Commission's Rules of Practice and Procedure (19 CFR 207.2(i)).

[2] Commissioner Lodwick determines than there is a reasonable indication of threat of material injury by reason of the subject imports.

[3] For purposes of these investigations, the term "certain granite" refers to products ⅜ inch to 2½ inches in thickness and includes rough-sawed granite slabs; face-finished granite slabs; and finished dimensional granite including, but not limited to, building facing, flooring, titles, and crypt fronts; the term excludes monument stone, crushed granite, and curbing.

[Investigation No. 731-TA-374 (Final)]

Import Investigation; Potassium Chloride From Canada

AGENCY: United States International Trade Commission.

ACTION: Revised schedule for the subject investigation.

EFFECTIVE DATE: September 10, 1987.

FOR FURTHER INFORMATION CONTACT: Jim McClure (202-523-1376), Office of Investigations, U.S. International Trade Commission, 701 E Street NW., Washington, DC 20436. Hearing-impaired individuals are advised that information on this matter can be obtained by contacting the Commission's TDD terminal on 202-724-0002. Persons with mobility impairments who will need special assistance in gaining access to the Commission should contact the Office of the Secretary at 202-523-0161.

SUPPLEMENTARY INFORMATION: On August 25, 1987, the Commission instituted the subject investigation and established a schedule for its conduct (52 FR 34326, September 10, 1987). Subsequently, the Department of Commerce extended the date for its final determination in the investigation from November 3, 1987 to January 8, 1988 (52 FR 33857, September 8, 1987). The Commission, therefore, is revising its schedule in the investigation to conform with Commerce's new schedule.

The Commission's schedule for the investigation is as follows: Requests to appear at the hearing must be filed with the Secretary to the Commission not later than January 5, 1988; the prehearing conference will be held in Room 117 of the U.S. International Trade Commission Building on January 11, 1988; the public version of the prehearing staff report will be placed on the public record on December 22, 1987; the deadline for filing prehearing briefs is January 13, 1988; the hearing will be held in Room 331 of the U.S. International Trade Commission Building on January 19, 1988; and the deadline for filing all other written submissions, including posthearing briefs, is January 26, 1988.

For further information concerning this investigation see the Commission's notice of investigation cited above and the Commission's Rules of Practice and Procedure, Part 207, Subparts A and C (19 CFR Part 207), and Part 201, Subparts A through E (19 CFR Part 201).

Authority: This investigation is being conducted under authority of the Tariff Act of 1930, Title VII. This notice is published pursuant to § 207.20 of the Commission's rules (19 CFR § 207.20).

By order of the Commission.

Issued: September 18, 1987.

Kenneth R. Mason,

Secretary.

[FR Doc. 87-21966 Filed 9-22-87; 8:45 am]

BILLING CODE 7020-02-M

INTERSTATE COMMERCE COMMISSION

[Docket No. AB-6 (Sub-292X)]

Burlington Northern Railroad Co.; Exemption; Abandonment in Hardeman and Cottle Counties, TX

AGENCY: Interstate Commerce Commission.

ACTION: Notice of exemption.

SUMMARY: The Interstate Commerce Commission exempts from the prior approval requirements of 49 U.S.C. 10903, *et seq.*, the abandonment by The Burlington Northern Railroad Company of approximately 37.40 miles of track in Hardeman and Cottle Counties, TX, subject to standard labor protective conditions..

DATES: This exemption will be effective on October 23, 1987. Petitions to stay must be filed by October 8, 1987, and petitions for reconsideration must be filed by October 19, 1987.

ADDRESSES: Send pleadings referring to Docket No. AB-6 (Sub-No. 292X) to:

(1) Office of the Secretary, Case Control Branch, Interstate Commerce Commission, Washington, DC 20423

(2) Petitioner's representative; Peter M. Lee, 3800 Continental Plaza, 777 Main Street, Fort Worth, TX 76102.

FOR FURTHER INFORMATION CONTACT: Joseph H. Dettmar, (202) 275-7245. (TDD for hearing impaired: (202) 275-1721).

SUPPLEMENTARY INFORMATION: Additional information is contained in the Commission's decision. To purchase a copy of the full decision, write to T.S. InfoSystems, Inc., Room 2229, Interstate Commerce Commission Building, Washington, DC 20423, or call 289-4357 (assistance for the hearing impaired is available through TDD services (202) 275-1721) or by pickup from TSI in Room 2229 at Commission headquarters.

Decided: September 16, 1987.

By the Commission, Chairman Gradison, Vice Chairman Lamboley, Commissioners Sterrett, Andre, and Simmons.

Noreta R. McGee,

Secretary.

[FR Doc. 87-2194 Filed 9-22-87; 8:45 am]

BILLING CODE 7035-01-M

DEPARTMENT OF LABOR

Pension and Welfare Benefits Administration

[Application No. D-7029 et al.]

Proposed Exemptions; Consolidated Electrical Distributors, Inc., et al.

AGENCY: Pension and Welfare Benefits Administration, Labor.

ACTION: Notice of proposed exemptions.

SUMMARY: This document contains noitices of pendency before the Department of Labor (the Department) of proposed exemptions from certain of the prohibited transaction restrictions of the Employee Retirement Income Security Act of 1974 (the Act) and/or the Internal Revenue Code of 1954 (the Code).

Written Comments and Hearing Requests

All interested persons are invited to submit written comments or requests for a hearing on the pending exemptions, unless otherwise stated in the Notice of Pendency, within 45 days from the date of publication of this **Federal Register** Notice. Comments and requests for a hearing should state the reasons for the writer's interest in the pending exemption.

ADDRESS: All written comments and requests for a hearing (at least three copies) should be sent to the Pension and Welfare Benefits Administration, Office of Regulations and Interpretations, Room N-5669, U.S. Department of labor, 200 Constitution Avenue NW., Washington, DC 20210. Attention: Application No. stated in each Notice of Pendency. The applications for exemption and the comments received will be available for public inspection in the Public Documents Room of Pension and Welfare Benefit Programs, U.S. Department of Labor, Room N-4677, 200 Constitution Avenue NW., Washington, DC 20210.

Notice to Interested Persons

Notice of the proposed exemptions will be provided to all interested persons in the manner agreed upon by the applicant and the Department within 15 days of the date of publication in the **Federal Register.** Such notice shall include a copy of the notice of pendency of the exemption as published in the **Federal Register** and shall inform interested persons of their right to comment and to request a hearing (where appropriate).

SUPPLEMENTARY INFORMATION: The proposed exemptions were requested in applications filed pursuant to section 408(a) of the Act and/or section 4975(c)(2) of the Code, and in accordance with procedures set forth in ERISA Procedure 75-1 (40 FR 18471, April 28, 1975). Effective December 31, 1978, section 102 of Reorganization Plan No.4 of 1978 (43 FR 47713, October 17, 1978) transferred the authority of the Secretary of the Treasury to issue exemptions of the type requested to the Secretary of Labor. Therefore, these notices of pendency are issued solely by the Department.

The applications contain representations with regard to the proposed exemptions which are summarized below. Interested persons are referred to the applications on file with the Department for a complete statement of the facts and representations.

Employees Retirement Plan of Consolidated Electrical Distributors' Inc. (the Plan) Located in Westlake, Village, CA 91362

[Application No. D-7029]

Proposed Exemption

The Department is considering granting an exemption under the authority of section 408(a) of the Act and section 4975(c)(2) of the Code and in accordance with the procedures set forth in ERISA Procedure 75-1 (40 FR 18471, April 28, 1975). If the exemption is granted the restrictions of section 406(a), 406(b)(1) and (b)(2) of the Act and the sanctions resulting from the application of section 4975 of the Code, by reason of section 4975(c)(1)(A) through (E) of the Code shall not apply to: (1) The proposed cash purchase of certain improved real property by the Plan from Consolidated Electrical Distribution, Inc. (the Plan Sponsor), a party in interest with respect to the Plan and (2) the proposed lease of the property by the Plan to the Plan Sponsor, provided that the terms and conditions of the transactions are at least as favorable to the Plan as those obtainable from an unrelated party.

Summary of Facts and Representations

1. The Plan is a non-contributory defined benefit pension plan which was established on January 1, 1969. The Plan has approximately 2025 participants and net assets of $51,027,929 as of December 31, 1985. The Plan's trustee is Trust Services of America, Inc. (the Trustee), Los Angeles, California. The Plan Sponsor is a Delaware Corporation, engaged primarily in the wholesale distribution of electrical parts.

2. The applicant represents that the Plan currently has a substantial portion of its current assets available for reinvestment. The Plan proposes to use a portion of these assets to purchase a parcel of improved real property located on Highway 90 East, Sulphur, Louisiana (the Property) from the Plan Sponsor for $192,000 in cash. The Property consists of a 10,800 square foot metal building situated on 53,281 square feet of land. The Property was recently acquired by the Plan Sponsor pursuant to approval by the United States Bankruptcy Court, Southern District of Texas, in the matter of Gulf Consolidated Services, Inc. for $192,000. The Property was appraised by M. Holley Heard (Mr. Heard), a real estate appraiser with the firm of Holley Heard Agency, Lake Charles, Louisiana, as having a fair market value of $192,000 as of October 15, 1986.

3. The Plan also proposes to lease the Property (the Lease) to the Plan Sponsor for a 15 year period. The Lease will be a triple net lease in favor of the Plan and will provide for monthly rental payments of $1600. The initial lease rental was based on Mr. Heard's determination of the appropriate rental as of December 30, 1986. Every 5 years the Lease rental will be adjusted by the Trustee to reflect the current fair market rental value.

4. The Trustee provides administrative and investment management services to employee benefit plans. The Trustee represents that it is an independent fiduciary and that it holds no financial position or other business relationship with the Plan Sponsor. The Trustee has reviewed all aspects of the proposed transactions including the Lease, a copy of Mr. Heard's appraisal of the Plan's investment portfolio. The Trustee has made the following determinations:

(a) The purchase price for the Property, which is based on an independent appraisal is fair and reasonable;

(b) The rent to be paid to the Plan is the appropriate fair market rental for the area;

(c) The Plan's portfolio is well diversified and the Plan's total interest in real property investments after purchasing the Property would still be under 1% of Plan assets;

(d) The Plan Sponsor is a substantial organization that will be able to meet its obligations under the Lease; and

(e) The terms of the transactions equal or exceed those obtainable from an unrelated party and will be in the best interests of, and protective of, the Plan and its participants and beneficiaries.

The Trustee has further stated that it will monitor the transaction and ensure that the Plan Sponsor complies with all terms and conditions of the transactions and will take, if necessary, appropriate steps to enforce the rights of the Plan.

5. In summary, the applicant represents that the proposed transactions satisfy the statutory criteria for an exemption under section 408(a) of the Act because:

(a) The Plan will pay the appraised fair market value for the Property;

(b) The Plan Sponsor will pay fair market rental to the Plan under the Lease;

(c) The Trustee has reviewed the proposed transactions and has concluded that they are in the interests and protective of the Plan and its participants and beneficiaries.

FOR FURTHER INFORMATION CONTACT: Alan H. Levitas of the Department, telephone (202) 523-8194. (This is not a toll-free number.)

McNichols Company Profit Sharing Plan and Trusts (the Plan) Located in Cleveland, Ohio

[Application No. D-7159]

Proposed Exemption

The Department is considering granting an exemption under the authority of section 408(a) of the Act and section 4975(c)(2) of the Code and in accordance with the procedures set forth in ERISA Procedure 75-1 (40 FR 18471, April 28, 1975). If the exemption is granted the restrictions of section 406(a), 406(b)(1) and (b)(2) of the Act and the sanctions resulting from the application of section 4975 of the Code, by reason of section 4975(c)(1)(A) through (E) of the Code shall not apply to: (1) The proposed loan of up to $800,000 by the Plan to Rockwall Properties (Rockwall); and (2) the guarantee of the loan by McNichols Company (the Employer), provided that the terms and conditions of the transactions are not less favorable to the Plan than those obtainable in an arm's-length transaction with an unrelated party on the date the loan is consummated.

Summary of Facts and Representations

1. The Plan is a profit sharing plan with 105 participants and net assets of approximately $4,809,771 as of March 31, 1987. The Plan's trustee is the National City Bank of Cleveland, Ohio. The Employer is an Ohio Corporation doing business in the states of Florida, Ohio, Illinois, Texas, Georgia and New Jersey. The principal business of the Employer is the distribution of specialty steel products.

2. Rockwall, an irrevocable trust established by the late Robert L. McNichols for the benefit of his grandchildren, currently owns and

leases to the Employer certain improved real property located in Atlanta, Georgia, Dallas, Texas and Tampa, Florida. The trustee of Rockwall, Mr. McNichols, is a principal shareholder as well as an officer of the Employer.

3. The Employer plans to relocate its headquarters within the Tampa, Florida area. It is proposed that Rockwall acquire property adjacent to the current Tampa property it leases to the Employer. The property to be acquired is located at 5505 Gray Street, Tampa, Florida (the Property). The Property, which contains approximately 38,000 square feet, is improved by a two-story masonry building. The Property was appraised by Mr. Ronald G. Taylor, MAI, an appraiser with the firm of Taylor Appraisal Services, Tampa, Florida, as having a fair market value of $1,325,000 as of April 10, 1987.

4. It is proposed that Rockwall borrow approximately $800,000 (New Loan) from the Plan to be used to acquire the Property. On January 23, 1985, the Department approved a loan between the Plan and Rockwall (Prior Loan) for the lesser of $660,000 or 24% of the Plan's assets (See PTE 85-16, 50 FR 3045). The applicant represents that the total combined proceeds of the New and Prior Loans will not exceed 25% of the Plan's assets or the amount of the New Loan will be reduced accordingly (balance of Prior Loan as of April 6, 1987 was approximately $616,508).

5. The new Loan will be repayable over a 15 year period, with equal monthly payments of principal and interest. The interest rate on the New Loan will be four percentage points above the one year Treasury Bill rate at the time the loan is made, but not less than 11% per annum. The interest rate will be adjusted pursuant to the same formula every three years during the term of the loan. The New Loan will be secured by a first mortgage on the Property. In addition, the repayment of the loan will be guaranteed by the Employer who has a net worth in excess of $4 million.

6. The Property is currently appraised at in excess of 160% of the amount of the New Loan. If the value of the Property declines during the term of the New Loan to an amount which is less than 150% of the then outstanding loan balance, Rockwall or the Employer will pledge additional collateral to bring the total collateral value to 150% of the New Loan balance. As additional security for the New Loan, Rockwall will conditionally assign its lease on the Property to the Plan. Casualty insurance will be maintained by Rockwall on the Property with the Plan named as loss payee.

7. The Huntington National Bank of Columbus, Ohio will serve as the independent Fiduciary (the Fiduciary) for the New Loan. The Fiduciary has no affiliation or relationship with the Employer, its principals, or Rockwall other than having been the Fiduciary for the Prior Loan. The Fiduciary will have full power to cause the New Loan to be made and to enforce all its terms and conditions.

The Fiduciary has reviewed the prohibited transaction application filed by the applicant, financial statements of Rockwall and the Employer, the Plan's investment portfolio and other investment opportunities available to the Plan. The Fiduciary found that the Plan currently has minimal annual cash outflow and no substantial increase is anticipated. While the total combined proceeds of the New and Prior Loans will initially constitute approximately 25% of the Plan's assets, that percentage will drop as the New and Prior Loans are amortized and as future Employer contributions and earnings are received. In addition, the real estate action as collateral for the loans is located in three different states, the quality of the tenants are excellent and the multi-purpose character of the properties would make it easy to locate new tenants in the event of default. Also, the New Loan is secured by a first mortgage on the Property and by a conditional assignment of Employer lease rental payments.

The Fiduciary has concluded that the 11% interest rate on the New Loan compares favorably with other market investments in the Plan's portfolio and with other investment opportunities currently available to the Plan in the marketplace with the same level of risk. Further, the interest rate will be always equal to at least 11% per annum, and will be adjusted every three years to reflect changes in market conditions.

Based on the above analysis, the Fiduciary finds that the New Loan is in the best interests of the Plan and its participants and beneficiaries. The Fiduciary will make the same type of review immediately prior to making the New Loan and will proceed with the New Loan only if it is able to conclude that the transaction is still in the best interests of the Plan.

8. In summary, the applicant represents that the proposed transactions satisfy the statutory criteria of section 408(a) of the Act because:

(a) The New Loan will be approved and monitored by the Fiduciary;

(b) The New Loan will be secured by collateral having a value of at least 150% of the amount of the loan;

(c) The Employer has guaranteed repayment of the New Loan;

(d) The total amount of the New and Prior Loans to Rockwall will represent less than 25% of Plan assets; and

(e) The Fiduciary has determined that the New Loan is in the best interests of the Plan and its participants and beneficiaries.

FOR FURTHER INFORMATION CONTACT: Alan Levitas of the Department, telephone (202) 523-8194. (This is not a toll-free number.)

The C.W. Houle, Inc. Profit Sharing Plan and Trust (the Plan) Located in Minneapolis, Minnesota

[Application No. D-7176]

Proposed Exemption

The Department is considering granting an exemption under the authority of section 408(a) of the Act and section 4975(c)(2) of the Code and in accordance with the procedures set forth in ERISA Procedure 75-1 (40 FR 18471, April 28, 1975). If the exemption is granted the restrictions of sections 406(a), 406 (b)(1) and (b)(2) of the Act and the sanctions resulting from the application of section 4975 of the Code, by reason of section 4975(c)(1) (A) through (E) of the Code shall not apply to the proposed cash sale by the Plan to C.W. Houle, Inc. (the Employer), the sponsor of the Plan, of a certain parcel of improved real property (the Property), which is currently being leased to the Employer, provided that the sales price is no less than the fair market value of the Property on the date of sale.

Summary of Facts and Representations

1. The Plan is a profit sharing plan with six participants and total assets of $760,615.59 as of March 31, 1987. The current trustee of the Plan, and the decision-maker with respect to plan investments, is Marquette Bank, Minneapolis (the Bank).

2. The Employer is a closely-held Minneapolis corporation engaged in the landscaping business. Clement W. Houle (Mr. Houle) and Ione K. Houle (together, the Houles) own 100% of the voting stock of the Employer in joint tenancy. The Houles are both employees of the Employer. Mr. Houle is an officer and director of the Employer. The Houles were the trustees of the Plan from December 1, 1964, the date that the Plan became effective, until July 22, 1986, the date the Bank was named trustee of the Plan.

3. The Property is a lot of approximately 9.43 acres located at 1300 West County Road I, Shoreview, Minnesota. The Property has certain

improvements, including a concrete block building with a large garage and shop area and can attached office portion (the Building). The Property was purchased by the Houles on April 29, 1971 from Kenneth E. Flick, an unrelated party, for $15,000. Funds belonging to the Plan were used to reimburse the Houles for the amount of purchase. Plan funds were also used to construct the Building during the summer and fall of 1971 at a cost of $52,668.14.

The Employer moved its landscaping business into the Building upon its completion and began paying rent to the Plan in the amount of $1,100 per month. The Plan paid all real estate taxes assessed on the Property. The Employer assumed financial responsibility for utilities, maintenance and additional improvements to the Property. The rent was increased in March, 1980, to $1,200 per month.

4. The Employer represents that the leasing of the Property from the Plan satisfied the requirements of section 414(c)(2) of the Act through June 30, 1984.[1] The Employer has continued to lease the Property beyond June 30, 1984. The rent for the Property was increased in December, 1985, to $1,560 per month. The Employer states that the necessary excise tax forms will be prepared and filed to report as a prohibited transaction the lease of the Property to the Employer, and that all appropriate taxes for the leasing transaction will be paid for the period from June 30, 1984 to the date of the proposed sale within 60 days of the date of a grant of this proposed exemption.

5. The Property was appraised on February 9, 1987 by Gerald A. McKinzie, A.S.A., M.G.A. (Mr. McKinzie), an independent real estate appraiser in White Bear Lake, Minnesota, as having a fair market value of $171,500. By letter dated July 22, 1987, Mr. McKinzie states that his valuation of the Property was based on an unencumbered fee simply interest and did not consider the lease of the Property to the Employer.

6. The Bank proposes to have the Plan sell the Property to the Employer for $171,500 in cash, in accordance with Mr. McKinzie's appraisal. The Plan will not pay any commissions or other expenses in connection with the sale. The Employer has agreed to finance the purchase from its own funds. However, the Employer represents that if additional funds are necessary to cover the purchase price, the Employer will not seek financing from the Bank.

[1] The Department expresses no opinion regarding the applicability of section 414(c)(2) of the Act to this lease arrangement.

The Bank states that the transaction is in the best interests of the Plan and its participants and beneficiaries. The Bank's conclusion is based on the Property's relatively poor performance as an investment and the Plan's current liquidity needs. The Bank states that the transaction will allow the Plan to reinvest the sale proceeds in investments which may be readily liquidated and which will yield a higher rate of return.

7. The Bank will monitor the transaction and will take whatever actions are necessary to protect the Plan's interests. In addition, the Bank will ensure that the Plan is made "whole" with respect to the past leasing of the Property to the Employer. The Employer will pay the difference between the actual amount of rent paid on the Property from July 1, 1984 to the date of the proposed sale and the fair market rental value for that same period of time, as determined by an independent appraiser's valuation of the Property. The Employer will pay interest on the deficiency at an appropriate market rate of interest. The Bank will determine the interest rate and will collect the rental differential plus interest from the Employer.

8. The applicant represents that the Bank is not related to, and shares no common interests with, the Employer. None of the owners or managers of the Employer serve on the Bank's Board of Directors. Loans outstanding to the Employer, as of June 26, 1987, represented only .14% of the Bank's total loan portfolio. Total deposits of approximately $166,000 for the Employer represent only .014% of the total amount of money currently on deposit with the Bank.

9. In summary, the applicant represents that the proposed transaction meets the statutory criteria of section 408(a) of the Act because: (a) The sale will be a one-time transaction for cash; (b) The Plan will receive an amount equal to the fair market value of the Property as determined by an independent appraiser; (c) the Plan will not incur any expenses with respect to the sale; and (d) Bank, as an independent trustee, believes that the sale of the Property to the Employer is in the best interest of the Plan since it will allow the Plan to divest itself of the Property and reinvest the proceeds in investments yielding a higher rate of return.

FOR FURTHER INFORMATION CONTACT: Mr. E.F. Williams of the Department, telephone (202) 523-8881. (This is not a toll-free number.)

Minor Agency Retirement Plan (the Plan) Located in Charlotte, North Carolina

[Application No. D-7212]

Proposed Exemption

The Department is considering granting an exemption under the authority of section 4975(c)(2) of the Code and in accordance with the procedures set forth in ERISA Procedure 75-1 (40 FR 18471, April 28, 1975).[2] If the exemption is granted the sanctions resulting from the application of section 4975 of the Code, by reason of sections 4975(c)(1)(A) through (E) of the Code shall not apply, effective August 24, 1987, to the sale for cash by the Plan of a 44.8% interest (the Interest) in a limited real estate partnership of which all the other partners are disqualified persons with respect to the Plan to the sole shareholder of the Plan sponsor, provided that the price paid be the fair market value of the Interest on the date of sale or the price originally paid by the Plan for the Interest, whichever is greater.

EFFECTIVE DATE: August 24, 1987.

Summary of Facts and Representations

1. The Plan is a defined contribution H.R. 10 (Keogh) plan of which Mr. Minor and his wife are the sole participants. The Plan's sponsor is The Minor Agency, engaged primarily in life and health insurance and investment sales, doing business in Charlotte, North Carolina. Mr. Minor is the trustee of the Plan. As of July 1, 1987 Plan assets totaled approximately $43,000.

2. On June 19, 1987 the Plan purchased for $28,000 in cash (65% of the Plan's assets) a 44.8% interest in Minorwood, Ltd. (Minorwood), a real estate partnership. The other partners in Minorwood are Mr. Minor as custodian of his four children's accounts and Kelly A. Minor (Mrs. Minor), Mr. Minor's wife. Mrs. Minor also serves as general partner of Minorwood.

3. Minorwood's entire assets are invested in an office condominium (the Condominium) located at 310 East Boulevard in Charlotte, North Carolina. Minorwood has leased the Condomium to the Plan sponsor.

4. The applicant recognizes that he has engaged in a prohibited transaction under section 406 of the Act.

[2] The applicant represents that W. Thomas Minor, III (Mr. Minor), is the sole shareholder of The Minor Agency, the Plan sponsor, and that Mr. Minor and his wife are the Plan's sole participants. Hence, there is no jurisdiction under Title I of the Employee Retirement Income Security Act of 1974 (the Act) pursuant to 29 CFR 2510.3-3(b). However, there is jurisdiction under Title II of the Act pursuant to section 4975 of the Code.

Accordingly, Mr. Minor proposes to purchase for cash the Plan's interest in Minorwood, and has agreed to file Form 5330 and to pay all applicable excise tax due in connection with the Plan's interest in Minorwood within sixty days of the publication in the **Federal Register** of an exemption for the sale of the Plan's interest in Minorwood. In order to expedite the transaction, the applicant has requested an effective date of August 24, 1987.

5. On July 14, 1987, Fitzhugh L. Stout, MAI, of Stout-Beck & Associaties, Inc., real estate appraisers and consultants in Charlotte, North Carolina, gave his opinion that the fair market value of the Condominium as of July 13, 1987 was $65,000.

6. Accordingly, the applicant agrees to pay in cash to the Plan an amount equal to 44.8% of the fair market value of the Condominium on the date of sale or the price originally paid for the Plan's interest in Minorwood, whichever is greater. The Plan shall suffer no loss in connection with its acquisition and holding of its interest in Minorwood, nor shall it pay any fees, taxes, Commissions, or other expenses in connection with the proposed sale.

7. In summary, the applicant represents that the proposed transactions meets the criteria of section 408(a) of the Act because: (a) The sale is a one-time transaction for cash, and no fees, taxes, or commissions will be paid on the sale; (b) the sale enables the Plan to end an ongoing relationship violative of the provisions of section 406 of the Act; (c) the Plan will suffer no loss in connection with the proposed transaction; and (d) the proposed transaction is in the interest and protective of the Plan and its participants.

FOR FURTHER INFORMATION CONTACT: Joseph L. Roberts III of the Department, telephone (202) 523-8194. (This is not a toll-free number.)

General Information

The attention of interested persons is directed to the following:

(1) The fact that a transaction is the subject of an exemption under section 408(a) of the Act and/or section 4975(c)(2) of the Code does not relieve a fiduciary or other party in interest or disqualified person from certain other provisions of the Act and/or the Code, including any prohibited transaction provisions to which the exemption does not apply and the general fiduciary responsibility provisions of section 404 of the Act, which among other things require a fiduciary to discharge his duties respecting the plan solely in the interest of the participants and beneficiaries of the plan and in a prudent fashion in accordance with section 404(a)(1)(B) of the Act; nor does it affect the requirement of section 401(a) of the Code that the plan must operate for the exclusive benefit of the employees of the employer maintaining the plan and their beneficiaries;

(2) Before an exemption may be granted under section 408(a) of theAct and/or section 4975(c)(2) of the Code, the Department must find that the exemption is administratively feasible, in the interests of the plan and of its participants and beneficiaries and protective of the rights of participants and beneficiaries of the plan; and

(3) The proposed exemptions, if granted, will be supplemental to, and not in derogation of, any other provisions of the Act and/or the Code, including statutory or administrative exemptions and transitional rules. Furthermore, the fact that a transaction is subject to an administrative or statutory exemption is not dispositive of whether the transaction is in fact a prohibited transaction.

(40 The proposed exemptions, if granted, will be subject to the express condition that the material facts and representations contained in each application are true and complete, and that each application accurately describes all material terms of the transaction which is the subject of the exemption.

Elliot I. Daniel,

Associate Director for Regulations and Interpretations, Pension and Welfare Benefits Administration, U.S. Department of Labor.

[FR Doc. 87-21891 Filed 9-22-87; 8:45 am]

BILLING CODE 4510-29-M

[Prohibited Transaction Exemption 87-87; Exemption Application No. D-6735 et al.]

Grant of Individual Exemptions; William L. Streitz, M.D., et al.

AGENCY: Pension and Welfare Benefits Administration, Labor.

ACTION: Grant of individual exemptions.

SUMMARY: This document contains exemptions issued by the Department of Labor (the Department) from certain of the prohibited transaction restrictions of the Employee Retirement Income Security Act of 1974 (the Act) and/or the Internal Revenue Code of 1954 (the Code).

Notices were published in the **Federal Register** of the pendency before the Department of proposals to grant such exemptions. The notices set forth a summary of facts and representations contained in each application for exemption and referred interested persons to the respective applications for a complete statement of the facts and representations. The applications have been available for public inspection at the Department in Washington, DC. The notices also invited interested persons to submit comments on the requested exemptions to the Department. In addition the notices stated that any interested person might submit a written request that a public hearing be held (where appropriate). The applicants have represented that they have complied with the requirements of the notification to interested persons. No public comments and no requests for a hearing, unless otherwise stated, were received by the Department.

The notices of pendency were issued and the exemptions are being granted solely by the Department because, effective December 31, 1978, section 102 of Reorganization Plan No. 4 of 1978 (43 FR 47713, October 17, 1978) transferred the authority of the Secretary of the Treasury to issue exemptions of the type proposed to the Secretary of Labor.

Statutory Findings

In accordance with section 408(a) of the Act and/or section 4975(c)(2) of the Code and the procedures set forth in ERISA Procedure 75-1 (40 FR 18471, April 28, 1975), and based upon the entire record, the Department makes the following findings:

(a) The exemptions are administratively feasible;

(b) They are in the interests of the plans and their participants and beneficiaries; and

(c) They are protective of the rights of the participants and beneficiaries of the plans.

William L. Streitz, MD., P.C. Profit Sharing and Retirement Plan (the Plan) Located in Roseburg, Oregon

[Prohibited Transaction Exemption 87-87; Exemption Application No. D-6735]

Exemption

The restrictions of sections 406(a) and 406(b)(1) and (2) of the Act and the sanctions resulting from the application of section 4975 of the Code, by reason of sections 4975(c)(1)(A) through (E) of the Code, shall not apply to the sale of certain real property by the Plan to William L. Streitz, M.D., a party in interest with respect to the Plan, provided the terms of the transaction are as favorable to the Plan as those obtainable by the Plan in an arm's-length transaction with an unrelated

party on the date the transaction is consumed.

For a more complete statement of the facts and representations supporting the Department's decision to grant this exemption refer to the notice of proposed exemption published on July 6, 1987 at 52 FR 25324.

FOR FURTHER INFORMATION CONTACT: Ms. Linda M. Hamilton of the Department, telephone (202) 523-8194. (This is not a toll-free number.)

MacIntyre, Fay & Thayer Insurance Agency Profit Sharing Plan (the Plan) Located in Newton, Massachusetts

[Prohibited Transaction Exemption 87-88; Exemption Application No. D-6887]

Exemption

The restrictions of section 406(a) and 406(b)(1) and (b)(2) of the Act and the sanctions resulting from the application of section 4975 of the Code, by reason of section 4975(c)(1)(A) through (E) of the Code, shall not apply to the cash sale (the Sale) by the Plan of 1,251 shares of Class A common stock of ADAPT, Inc. (the Stock) to seven stockholders and employees of MacIntyre, Fay & Thayer Insurance Agency, Inc., who are parties in interest with respect to the Plan, provided that the sales price is not less than the greater of the fair market value of the Stock as of the date of the Sale or the total expenses to the Plan in its acquiring, holding, and selling the Stock.

For a more complete statement of the facts and representations supporting the Department's decision to grant this exemption refer to the notice of proposed exemption published on July 24, 1987 at 52 FR 27886.

FOR FURTHER INFORMATION CONTACT: Mr. C.E. Beaver of the Department, telephone (202) 523-8881. (This is not a toll-free number.)

Sechrist-Hall Company Profit Sharing Plan (the Plan) Located in Corpus Christi, TX

[Prohibited Transaction Exemption 87-89; Exemption Application No. D-7052]

Exemption

The restrictions of section 406(a), 406(b)(1) and (b)(2) of the Act and the sanctions resulting from the application of section 4975 of the Code, by reason of section 4975(c)(1)(A) through (E) of the Code, shall not apply to the proposed cash sale by the Plan of certain unimproved real property (the Real Property) to Sechrist-Hall Company, provided the price paid for the Real Property is not less than the greater of its fair market value on the date of sale or the total acquisition and holding costs incurred by the Plan.

For a more complete statment of the facts and representations supporting the Department's decision to grant this exemption refer to the notice of proposed exemption published on July 31, 1987 at 52 FR 28618.

FOR FURTHER INFORMATION CONTACT: Ms. Jan D. Broady of the Department, telephone (202) 523-8883. (This is not a toll-free number.)

Plumbers, Pipe Fitters and Apprentices Local No. 112 Educational and Apprenticeship Fund (the Plan) Located in Binghamton, New York

[Prohibited Transaction Exemption 87-90; Exemption Application No. D-7071]

Exemption

The restrictions of section 406(a) of the Act shall not apply to the proposed sales by the Plan to J & K Plumbing and Heating Co., Inc., a party in interest with respect to the Plan, or (1) an option to purchase certain real estate (the Land) owned by the Plan and (2) the Land itself, provided the sales prices are not less than the fair market values of the option and the Land on the dates of the sales of each and provided further that the other terms of the transactions are at least as favorable to the Plan as those the Plan could obtain in similar transactions with an unrelated party.

For a more complete statement of the facts and representations supporting the Department's decision to grant this exemption refer to the notice of proposed exemption published on July 17, 1987 at 52 FR 27086.

FOR FURTHER INFORMATION CONTACT: Mrs. Miriam Freund of the Department, telephone (202) 523-8194. (This is not a toll-free number.)

Bozell, Jacobs, Kenyon & Eckhardt, Inc. Profit Sharing and Savings Plan (the Plan) Located in Omaha, Nebraska

[Prohibited Transaction Exemption 87-91; Exemption Application No. D-7073]

Exemption

The restrictions of section 406(a)(1), 406(b)(1) and 406(b)(2) of the Act and the sanctions resulting from the application of section 4975 of the Code, by reason of section 4975(c)(1)(A) through (E) of the Code, shall not apply to the proposed purchase by the Plan of a certain partnership interest from First National Leasing, Inc.; provided that such transaction is on terms at least as favorable to the Plan as the Plan could obtain in an arm's-length transaction with an unrelated party.

For a more complete statement of the facts and representations supporting the Department's decision to grant this exemption refer to the notice of proposed exemption published on July 24, 1987 at 52 FR 27887.

FOR FURTHER INFORMATION CONTACT: Mrs. Betsy Scott of the Department, telephone (202) 523-8883. (This is not a toll-free number.)

G. Snidow, Inc. Restated Employee Pension Benefit Plan (the Plan) Located in Ruidoso, New Mexico

[Prohibited Transaction Exemption 87-92; Exemption Application No. D-7087]

Exemption

The sanctions resulting from the application of section 4975 of the Code, by reason of section 4975(c)(1) (A) through (E) of the Code, shall not apply to a purchase of unimproved real property by the Plan from g. Snidow, Inc. (the employer), a disqualified person with respect to the Plan, provided the Plan pays no more than fair market value for the property and the transaction represents no more than 25 percent of the assets of the Plan at the time of purchase.[1]

For a more complete statement of the facts and representations supporting the Department's decision to grant this exemption, refer to the notice of proposed exemption published on July 31, 1987 at 52 FR 28619.

FOR FURTHER INFORMATION CONTACT: Paul Kelty of the Department, telephone (202) 523-8883. (This is not a toll-free number.)

Wabash-Lagrange Steel Company Plan and Trust (the Contribution Plan) Located in Toledo, Ohio

[Prohibited Transaction Exemption 87-93; Exemption Application No. D-7095]

Exemption

The restrictions of section 406(a) and 406(b)(1) and (b)(2) of the Act and the sanctions resulting from the application of section 4975 of the Code, by reason of section 4975(c)(1) (A) through (E) of the Code, shall not apply to the cash sale by the Contribution Plan of real estate trust shares (the Shares) in Landsing Institutional Properties Trust V to Wabash-Lagrange Steel Company, the sponsor of the Contribution Plan, for a sale price of $25,000; provided that such sales price is no less than the fair market value of the asked price for the Shares on the over-the-counter NASDAQ market, as published in the *Wall Street Journal* on the date of sale.

[1] Because Gordon Snidow is the sole owner of the Employer and he and his wife are the only participants in the Plan, there is no jurisdiction under Title I of the Act pursuant to 29 CFR 2510.3-3(b). However, there is jurisdiction under Title II of the Act under section 4975 of the Code.

For a more complete statement of the facts and representations supporting the Department's decision to grant this exemption refer to the notice of proposed exemption published on July 31, 1987 at 52 FR 28620.

FOR FURTHER INFORMATION CONTACT: Angelena C. Le Blanc of the Department, telephone (202) 523-8881. (This is not a toll-free number.)

Naegele Outdoor Advertising Company of Louisville, Inc. Employee's Group Pension Plan (The Plan) Located in Louisville, Kentucky

[Prohibited Transaction Exemption 87-94; Exemption Application No. D-7104]

Exemption

The restrictions of section 406(a), 406(b)(1) and (b)(2) of the Act and the sanctions resulting from the application of section 4975 of the Code, by reason of section 4975(c)(1) (A) through (E) of the Code, shall not apply to the sale by the Plan to Naegele Company, Inc. (Naegele), and/or to Naegele's parent corporations, of the right to receive future payments under a group annuity contract for cash, provided the amount received by the Plan is not less the fair market value of such payments on the dale of the sale.

For a more complete statement of the facts and representations supporting the Department's decision to grant this exemption refer to the notice of proposed exemption published on July 17, 1987 at 52 FR 27089.

FOR FURTHER INFORMATION CONTACT: Gary H. Lefkowitz of the Department, telephone (202) 523-8881. (This is not a toll-free number.)

Marcia Freed, M.D., Keogh Plan and Trust (the Keogh Plan) Located in Portland, OR

[Prohibited Transaction Exemption 87-95; Exemption Application No. D-7117]

Exemption

The sanctions resulting from the application of section 4975 of the Code, by reason of section 4975(c)(1)(A) through (E) of the Code, shall not apply to the cash sale of twenty (20) Canadian Maple Leaf gold coins (the Coins) and five (5) silver bars (the Bars) by the Keogh Plan to Marcia Freed, M.D. (Dr. Freed), a disqualified person with respect to the Keogh Plan; provided that the purchase price of the Coins and the Bars is the fair market retail value on the date of sale.[2]

For a more complete statement of the facts and representations supporting the Department's decision to grant this exemption refer to the notice of proposed exemption published on Friday, July 17, 1987, at 52 FR 27090.

FOR FURTHER INFORMATION CONTACT: Angelena Le Blanc of the Department, telephone (202) 523-8883. (This is not a toll-free number.)

Gary J. Guttmann, D.D.S., Inc. Profit Sharing Plan and Trust, and the Gary J. Guttmann, D.D.S., Inc. Pension Plan and Trust (collectively, the Plans) Located in Cleveland, Ohio

[Prohibited Transaction Exemption 87-96; Exemption Application Nos. D-7164 & D-7165]

Exemption

The restrictions of section 406(a) and 406(b)(1) and (b)(2) of the Act and the sanctions resulting from the application of section 4975 of the Code, by reason of section 4975(c)(1)(A) through (E) of the Code, shall not apply to the proposed sale of certain parcels of undeveloped real estate (the Property) by the individually directed accounts of Gary J. Guttmann, D.D.S. (Dr. Guttmann), in the Plans to Dr. Guttmann, a party in interest with respect to the Plans, provided that the sales price for the Property is no less than the fair market value of the Property on the date of sale.

For a more complete statement of the facts and representations supporting the Department's decision to grant this exemption refer to the notice of proposed exemption published on July 31, 1987 at 52 FR 28621.

FOR FURTHER INFORMATION CONTACT: Mr. E.F. Williams of the Department, telephone (202) 523-8881. (This is not a toll-free number.)

General Information

The attention of interested persons is directed to the following:

(1) The fact that a transaction is the subject of an exemption under section 408(a) of the Act and/or section 4975(c)(2) of the Code does not relieve a fiduciary or other party in interest or disqualified person from certain other provisions of the Act and/or the Code, including any prohibited transaction provisions to which the exemption does not apply and the general fiduciary responsibility provisions of section 404 of the Act, which among other things require a fiduciary to discharge his duties respecting the plan solely in the interest of the participants and beneficiaries of the plan and in a prudent fashion in accordance with section 404(a)(1)(B) of the Act; nor does it affect the requirement of section 401(a) of the Code that the plan must operate for the exclusive benefit of the employees of the employer maintaining the plan and their beneficiaries;

(2) These exemptions are supplemental to and not in derogation of, any other provisions of the Act and/or the Code, including statutory or administrative exemptions and transitional rules. Furthermore, the fact that a transaction is subject to an administrative or statutory exemption is not dispositive of whether the transaction is in fact a prohibited transaction.

(3) The availability of these exemptions is subject to the express condition that the material facts and representations contained in each application accurately describes all material terms of the transaction which is the subject of the exemption.

Signed at Washington, DC, this 17th day of September, 1987.

Elliot I. Daniel,

Associate Director for Regulations and Interpretations, Pension and Welfare Benefits Administration, U.S. Department of Labor.

[FR Doc. 87-21892 Filed 9-22-87; 8:45 am]

BILLING CODE 4510-29-M

[2] Because Dr. Freed is the only participant in the Keogh Plan there is no jurisdiction under Title I of the Act pursuant to 29 CFR 2510.3-3(b). However, there is jurisdiction under Title II of the Act pursuant to section 4975 of the Code.

NATIONAL COMMISSION FOR EMPLOYMENT POLICY

Meeting

ACTION: Notice of meeting.

SUMMARY: Under the provisions of the Federal Advisory Committee Act (Pub. L. 92-463, as amended) notice is hereby given of a public meeting and executive session (pursuant to V Section 974 (A)(1), Pub. L. 97-300) of the National Commission for Employment Policy at the IBM Management Development Center, Old Orchard Road, Armonk, NY.

DATE: Thursday, October 8, 1987, 9:00 a.m. to 5:00 p.m..

Status: The meeting is open to the public with the exception of the executive session

Matters to be discussed: Commission members will discuss progress on the research agenda, budget and administrative matters, and legislative and governmental affairs.

FOR FURTHER INFORMATION CONTACT: Mr. Scott W. Gordon, Director, National Commission for Employment Policy, 1522 K Street NW. Suite 300, Washington, DC 20005, 202-724-1545.

SUPPLEMENTARY INFORMATION: The National Commission for Employment Policy is authorized by the Job Training Partnership Act (Pub. L. 97-300). The Act gives the Commission the broad responsibility of advising the President and the Congress. Handicapped individuals wishing to attend should contact the Commission so that appropriate accomodations can be made. Copies of the minutes and materials prepared for the meeting will be available for public inspection at the Commission's offices, 1522 K Street NW., Suite 300, Washington, DC 20005.

Signed this 17th day of September, 1987.

Scott W. Gordon,

Director.

[FR Doc. 87-21864 Filed 9-22-87; 8:45 am]

BILLING CODE 4510-30-M

NATIONAL SCIENCE FOUNDATION

Undergraduate Faculty Enhancement; Program Announcement and Guidelines

Please note.—Appendixes are not published in this document. The page and appendix references in this document refer to, and are included in, the UFE Program Announcement and Guidelines.

Inquiries

Questions not addressed in this publication may be directed to the NSF staff by contacting: Undergraduate Faculty Enhancement Program, Office of Undergraduate Science, Engineering and Mathematics Education, Directorate for Science and Engineering Education, Room 639, National Science Foundation, Washington, DC 20550, Telephone: (202) 357-7051, Electronic Mail: Bitnet: Undergrad@NSF, Arpanet, CSnet: Undergrad@note.NSF. gov.

The Faculty Enhancement Program is an integral part of NSF's overall plan to strengthen undergraduate science, engineering and mathematics education throughout the United States. This NSF plan also includes support for undergraduate laboratory development, curriculum development in mathematics and engineering, Research Experiences for Undergraduates (REU), Research Opportunity Awards (ROA), and the Research in Undergraduate Institutions activity (RUI) for FY 1988.

UNDERGRADUATE FACULTY ENHANCEMENT PROGRAM

Undergraduate Faculty Seminars and Conferences

I. Introduction

The teaching faculty are a key element in undergraduate education. It is important that they be intellectually vigorous and excited about their disciplines, that their knowledge of recent developments in their fields be up-to-date, and that they regard the teaching of undergraduates as an important and rewarding activity. To these ends, the National Science Foundation (NSF) provides leadership and financial assistance to encourage colleges and universities to take a systematic interest in the currency and vitality of the faculty who are primarily involved in undergraduate teaching and to assist them in enhancing their disciplinary capabilities and teaching skills.

This announcement describes the *Undergraduate Faculty Enhancement Program,* which makes grants for Undergraduate Faculty Seminars and Conferences. These provide opportunities for groups of faculty to learn about new techniques and new developments in their fields.

In addition, faculty may submit their own research proposals to the appropriate research programs at NSF, either as regular research proposals or through the *Research in Undergraduate Institutions* (RUI) activity (refer to the RUI announcement, NSF 85-59). They may also associate with an existing or proposed NSF-supported research program through the *Research Opportunity Awards* (ROA) activity (refer also to NSF 85-59).

II. Program Description

A. Purpose and Scope

The Undergraduate Faculty Seminars and Conferences activity makes grants to conduct regional or national seminars, short courses, workshops, or similar activities for groups of faculty members. Grants will be made for the development and implementation of ways to assist large numbers of faculty to learn new ideas and techniques in their fields, and to use the knowledge and experience to improve their undergraduate teaching abilities.

The purpose of the program is to meet the needs of faculty who teach primarily undergraduate students. These faculty need to be familiar with new experimental techniques and ways of incorporating them into undergraduate laboratories. They need to have experience with new instrumentation and to have the opportunity to evaluate its suitability for use at their home institutions. They need to be familiar with recent theoretical developments in their fields which bear on their undergraduate teaching. They need opportunities to synthesize knowledge which cuts across their own and other disciplines. Finally, they need opportunities to interact intensively with experts in the field and with colleagues who are active scientists and teachers, both during the course of a project and in a continuing way after the end of a project.

Projects must be regional or national in scope, and may include seminars, short courses, workshops, and conferences, or a series of such activities, but are not limited to these. Actual sessions may vary considerably in length, normally from a few days to a few weeks.

The kinds of activities which are encouraged include projects which

- Allow participants to gain experience with recent developments in the field;
- Enable participants to work with innovative technologies relevant to their academic responsibilities and which allow them to evaluate the technology;
- Permit participants to work with experts who have had a part in originating the ideas which are the subject of the project or who have worked extensively with the ideas or techniques;
- Allow participants to work with industrial scientists, mathematicians, and engineers and to learn new industrial applications in the field;
- Permit participants to obtain personal experience working with new ideas and techniques, rather than just hearing about them;
- Encourage participants to develop instructional materials that include new ideas and techniques;
- Explore new methods of delivery of information, such as the use of computers or teleconferencing, either in work with other participants during the project or in participants' activities after the project;
- Encourage sustained interaction among the participants following the project and continued opportunities for learning about the topics of the project;
- Encourage the increased participation of underrepresented groups in science, mathematics, and engineering.

Although the kinds of projects and activities described here are expected to include the majority of those supported through the Undergraduate Faculty Enhancement Program, proposals envisioning additional mechanisms for enhancing the vitality of the undergraduate faculty will be considered by NSF.

B. Eligibility Criteria and Limitations

1. Eligible Activities

The aim of the program is to improve the technical capability of experienced faculty members in ways which will enhance their ability to teach up-to-date undergraduate courses and laboratories. Thus activities proposed must be justified explicitly by their capacity to enhance participants' teaching activities for undergraduate students at one or more levels. It is not appropriate to propose activities which will primarily benefit a faculty member's research abilities. On the other hand, projects of a purely pedagogical nature which do not serve to enhance the faculty member's technical capability are not appropriate, either. Activities should be especially designed for experienced teachers and ordinarily should not duplicate parts of courses normally given by graduate departments.

The emphasis of the proposed project must be on the active involvement of the participants in working with the topic of the project and in interaction with scientists, engineers, and mathematicians experienced in the topic and with fellow participants. Thus, for example, in laboratory projects, participants must have access to equipment and facilities and have sufficient time to become familiar with experimental techniques and the experiments which may be done. In theoretical projects, participants must have sufficient opportunity to learn the theory and explore its implications. In all projects, participants must actually work extensively with the substance of the topic and interact with experts. Projects which are primarily lecture courses are therefore not appropriate in most cases.

The Foundation is concerned about the underrepresentation of women, minorities, and disabled persons in careers in science, mathematics, and engineering. Projects involving members of these groups as part of the staff or as target audiences are especially encouraged.

2. Eligible Organizations and Fields

The program will accept proposals from scientists, engineers, and mathematicians representing appropriate organizations, including colleges and universities, national laboratories, professional societies, other non-profit organizations, for-profit industries with the scientific expertise and facilities, and other organizations which can conduct the described activities.

The project should have one director, who is responsible for its operation as well as for its planning and administration. Normally the director will be an authority in the topic of the project and will devote full time to it during its operation. Other senior personnel may be involved if appropriate, but in all cases it is desirable that there be sustained interaction between the project personnel and participants.

Proposals may be submitted for support in the fields of science, engineering, and mathematics ordinarily supported by the Foundation, including the physical and biological sciences, social sciences, mathematics, computer and information sciences, and engineering, or for interdisciplinary projects which deal primarily with these fields. Specifically excluded from support are activities which are addressed to clinical fields associated with the sciences, such as medicine, nursing, clinical psychology, and physical education, as well as activities which primarily involve social work, home economics, business, the arts, and the humanities.

3. Types of Support Available and Cost Sharing

The Foundation will provide support for reasonable direct costs of operating the project, including salaries of senior personnel, clerical support, supplies, the cost of publications, postage and telephone charges, and computer services. The grantee institution is expected to provide facilities and equipment necessary to operate the project, and therefore no permanent equipment or facilities will ordinarily be supported. Indirect costs will be allowed.

Participant costs should be shared between the grant and the participating faculty member's home institution. It is expected that the home institution will bear travel costs; the cost of lodging and meals for participants may be requested from the grant. If there are other participant costs the proposal should describe them and request funds for them. No tuition or other fees may be charged to the participants. Participants may receive a stipend of up to $250 per week of the project.

Projects may be operated in one or more continuous sessions. Although summer may be most convenient for many directors and particpants, it may be appropriate to operate some projects during the academic year. Ordinarily, awards will be made for one year, although proposals with sufficient justification for projects which continue over a longer period will be considered.

4. Selection of Participants

After awards have been made by NSF, directors should publicize their project's availability widely to the intended audience. Faculty members who wish to participate in a particular project will apply directly to the project director. Directors, acting in consultation with a selection committee if desired, and within the guidelines established by NSF in this announcement, will be responsible for selecting participants for the project and making arrangements for its operation.

The program is intended for those whose primary duties lie in undergraduate teaching. Participants should ordinarily have a minimum of three years of undergraduate teaching experience by the beginning of the project. The participants must be drawn from a regional or national audience; where some participants come from the host institution, the grant will not pay participant support costs (see budget line F, described on page 00) for local participants.

The number of participants in a project will depend on the facilities and equipment available and on the topic of the activity. A project should accommodate enough participants to enable it to have an impact on the teaching of a subject and to allow for diversity in the group of participants; a minimum of 10 participants is suggested. On the other hand, projects should be planned so that the number of participants is not so large that access to equipment and project personnel is unduly restricted.

III. Preparation of Proposals

This announcement sets forth basic information needed for proposal preparation. Proposers must also consult the publication Grants for Research and Education in Science and Engineering (GRESE) (NSF 83-57 rev. 1/87) for additional guidance. This publication is available from the Forms and Publications Unit, National Science Foundation, 1800 G Street NW., Washington, DC 20550. Proposers should use the forms contained in this announcement (pp. 00-00), not those in GRESE.

Except as modified by the guidelines set forth in this announcement, standard NSF guideliens on proposal preparation, submission, evaluation, NSF awards (general information and highlights), declinations and withdrawals contained in GRESE are applicable.

More comprehensive information is contained in the NSF Grant Policy Manual, Revised, (NSF 77-47) available

for purchase at $12.00 from the Superintendent of Documents, Government Printing Office, Washington, DC 20402. The Grant Policy Manual ordinarily is not needed in the process of preparing a proposal.

In the event that the submitting organization has never been the recipient of an NSF award, however, it is recommended that appropriate administrative officials become familiar with the NSF policies and procedures contained in the NSF Grant Policy Manual, Revised, which are applicable to most NSF awards. (If a proposal from such an institution is recommended for an award, the NSF Division of Grants and Contracts will request certain organization, management, and financial information. These requirements are contained in Chapter III of the Manual.)

A proposal consists of the following parts:

1. Cover Sheet
2. Project Summary Form
3. Table of Contents
4. Narrative
5. Budget
6. Curriculum Vitae
7. Statement of Current and Pending Support
8. Summary of Results of Prior NSF Support
9. Appendices (optional)

1. *Cover Sheet.* The first page of the proposal will be the cover sheet prepared in the form found on page 00. This cover sheet form should be duplicated and completed. The cover sheet must bear the signatures of the proposed principal investigator and of an administrative official who is empowered to commit the proposing organization to the conduct and prudent management of the project if NSF agrees to support it.

2. *Project Summary Form.* The second page of the proposal will be the project summary form (page 00). The information provided on this form is used by the program staff for a variety of purposes, including the proper assignment of proposals to reviewers. Name of institution and project title must be written exactly as given on the cover sheet. Please enter the data requested in the boxes according to the instructions on the back of the form. The information is requested in the indicated format to facilitate its input into the NSF data collection system.

The Summary of Proposed Work should be a concise description of the proposed activity suitable for publication by the Foundation to inform the general public about its awards. The text should not exceed 200 words in length. The summary should be a self-contained description of the activity which would result if the proposal is funded by NSF, not an abstract of the proposal. The summary should include a statement of the objectives of the project, a short description of its operation, and a statement of its significance to undergraduate teachers and their students. It should be written so that a technically literate reader can understand the use of Federal funds in support of the proejct.

3. *Table of Contents.* The proposal should be paginated continuously, and the beginning of each section noted in the table of contents.

4. *Narrative.* The narrative provides a detailed description of the proposed project, and it contains most of the information used to judge the suitability of the project for funding. Although no particular form is required, the description should cover the following points.

- What scientific, engineering, or mathematical topics will be covered during the project, and in what way? What is the significance of these topics in the field? To what extent will the coverage be experimental or theoretical?
- What are the qualifications of the staff, particularly the director, which make them especially qualified to conduct the project? What is the relationship between the topics and the director's professional activities? If other people are to take part in the operation of the project, what repsonsibilities will each take, and how do they fit into the overall project?
- What experience does the director or other staff or the organization have with instruction of faculty from other institutions? What provisions does the host institution plan to make that will maintain an intellectual setting that is conducive to learning by a group of mature professionals?
- How will the project be operated? What will be the structure of the project, and what will be required of participants during the projejct? One of the features to be addressed here will be the arrangements for sustained interaction of the participants with experts and among themselves during the course of the project and after its completion.
- In what ways are the topics particularly suitable for faculty who teach undergraduates? Projects should be designed to appeal to a large number of teachers of undergraduates, either within a single discipline or across several disciplies.
- What is the intended audience for the project? Although projects should not require higly specialized training from the participants, it is reasonable to require some background related to the topics covered. What prerequisites will there be?
- What information will be requested from applicants? How will participants be selected? Who will be involved in making the selection? What efforts will be made to recruit participants?
- What facilities and equipment are available for the project? This includes meeting rooms, scientific equipment, laboratories, and computers, and also the planned provision for participant housing, meals, and recreation.
- How will the project be evaluated?

Other information needed to provide a complete description of the project may be included. The narrative section should be printed in a way which is easy to read and should not exceed 15 single-spaced or 30 double-spaced pages.

Potential proposers are encouraged to discuss their ideas with the Program Director in advance of submitting a formal proposal. The telephone number is 202-357-7051.

5. *Budget.* The budget should be presented in the standard NSF form reproduced on Page 00. The discussion in *GRESE*, pp. 5-7, applies in general. The following considerations apply specifically to this program:

A. *Senior Personnel.* There must be a single project director who will be primarily responsible for administration and operation of the project. Other senior personnel may be listed if appropriate, but proposers should keep in mind the desirability of sustained interaction with an expert or experts in the topic to be covered.

B. *Other Personnel.* Project directors will need secretarial help in handling applications for the project and assistance in arranging for the project's operation.

C. *Fringe Benefits.* Allowable according to institutional policy.

D. *Equipment.* Ordinarily not allowed.

E. *Travel.* Allowed if necessary for the operation of the project, but not for participant travel to and from the project.

F. *Participant Support Costs.* Reasonable costs for subsistence for participants are allowed. Include here also a stipend of up to $250 per week paid to each participant, pro rata for periods not an integral number of weeks.

G. *Other Direct Costs.* Include here costs of supplies, publications, postage and telephone charges, and computer services as necessary. Include also estimated costs of publicizing the availability of the project to the intended audience.

H. *Indirect Costs.* Calculated according to the standard procedure outlined in GRESE, p. 7.

6. *Curriculum Vitae.* A curriculum vitae should include a record of the director's education and professional experience, honors, and a list of revelant publications, particularly in the previous 5 years. Also include here vitae for other senior personnel who will have a substantial responsibility for the operation of the project.

7. *Statement of Current and Pending Support.* All current and pending externally-funded support to the director and other senior personnel must be listed on the form found on page 00.

8. *Results of Prior NSF Support.* If the project director has received support from NSF in the past 5 years, the proposal must include a section summarizing the results of that support. It must include

- The NSF award number, amount, period of support, and project title.
- A summary of the results of completed work. (To facilitate review this summary should not exceed three pages.)
- A list of publications and formal presentations acknowledging the award. (Copies of publications should *not* be submitted with the proposal.)

9. *Appendices.* Material supplemental to the rest of the proposal may be included as appendices. Appendices should be printed on colored paper to distinguish them from the text. It is important that appendices, if included, be brief and easy to read.

Form 1225, Information about Principal Investigators, which provides data on sex, ethnic origin, and handicap, if found on page 00. Only one copy of this form is to be submitted. It should be attached to the signature copy of the proposal cover sheet. While providing the requested data is voluntary, SUBMITTING *THIS FORM* IS REQUIRED BY NSF. OMISSION OF THIS FORM WILL CAUSE CONSIDERABLE DELAY IN PROCESSING THE PROPOSAL. Any individual not wishing to submit the information should check the box provided for this purpose. Data will be treated as confidential, and will be maintained in secure data files in accordance with the Privacy Act of 1974. The information contained in this form will be available only to the NSF staff and will not be used in the external peer review process. All analyses conducted on the data will report aggregate statistical findings only and will not identify individuals.

IV. Review Criteria

NSF evaluates proposals on the basis of four general criteria:

1. *Performance competence.* This criterion relates to the capability of the investigator(s), the technical soundness of the proposed approach, the adequacy of the institutional resources available, and the proposer's recent science, engineering, or mathematics research and education performance.

2. *Intrinsic merit.* This criterion is used to assess the quality, currency, and significance of the scientific and technical content and related instructional activity of the project within the context of undergraduate science, engineering, and mathematics education.

3. *Utility or relevance of the project.* This criterion is used to assess the impact the project will have on the faculty participants and their undergraduate students.

4. *Effect on the infrastructure of science, mathematics and/or engineering.* This criterion relates to the potential of the proposed project to contribute to better understanding or to improvement of the quality, distribution, or effectiveness of the Nation's scientific/engineering/mathematics research, education, and human resources base.

See page 9 of GRESE for an additional discussion of these criteria.

Grants are awarded on a competitive basis. In selecting proposals to be supported, the Foundation is assisted by peer reviewers, who are scientists, engineers, or mathematicians drawn primarily from the academic community and also from research organizations and professional associations.

V. Proposal Submission

Proposals for projects which are planned to begin during the summer of 1988 should be received in the Foundation no later than *11 December 1987* in order to allow time for review and evaluation. Proposals for projects to begin after the summer of 1988 which are to be funded in fiscal year 1988 should be received in the foundation by *4 March 1988.* Proposals received in March 1988 may be for projects which begin during the academic year 1988–89 or during the summer of 1989; submission at this time may allow greater opportunity for planning after the announcement of an award. Proposals received after these target dates will be reviewed, but decisions may be delayed by their late arrival.

Materials required:

One copy of Information about Principal Investigators, Form 1225
Fifteen copies of the complete proposals;
Three extra copies of the Cover Sheet;
Two extra copies of the Budget;
Two extra copies of the Project Summary Form.

These materials should be submitted to: Proposal Processing Unit for Undergraduate Faculty Enhancement Program, National Science Foundation, Room 223, 1800 G Street NW., Washington, DC 20550.

VI. Inquiries

Inquiries about matters not addressed in this publication may be directed to the program staff by contacting: Undergraduate Faculty Enhancement Program, Office of Undergraduate Science, Engineering, and Mathematics Education, Directorate for Science and Engineering Education, National Science Foundation, Washington, DC 20550, 202–357–7051.

Other Programs

NSF Guide to Programs (NSF 86–40) briefly describes all Foundation programs. It is available at most institutions or may be obtained at no cost by contacting the Forms and Publications Unit, Room 232, NSF, Washington, DC 20550 (202/357–7861). Some programs of special interest to undergraduate faculty are described below.

- The goal of the Instrumentation and Laboratory Improvement Program is to improve the quality of the undergraduate curriculum by supporting projects to develop new or improved instrument-based undergraduate laboratory and/or field courses in science, mathematics or engineering. For additional information request the program announcement and guidelines, NSF 87–74 or contact the Office of Undergraduate Science, Engineering and Mathematics Education, Room 639, NSF, Washington, DC 20550 (202/357–7051).
- Research Experiences for Undergraduates (REU) provides an opportunity for college students to gain hands-on experience in science, mathematics or engineering research programs or equivalent projects conducted with the needs of undergraduates in mind. REU provides funds to operate REU Research Participation Sites. Each such site usually will involve several college students. REU also will supplement ongoing NSF research awards to enable them to provide research training experience for one or two undergraduates. More information is available through the REU Brochure, NSF 87–63 (copies of which may be obtained from the Forms and

Publications Unit, NSF, Washington, DC 20550), or from the Divisional REU Coordinator, (Name of Discipline), NSF, Washington, DC 20550. Telephone numbers of the REU Coordinators for the various disciplines are listed in the REU brochure.

• The Research in Undergraduate Institutions (RUI) activity is part of the Foundation's effort to broaden the participation of faculty in undergraduate institutions in NSF-supported science and engineering research and to enhance the scientific and technical training of students. The objectives of the RUI activity are to provide faculty support to carry out research leading to new knowledge and techniques in their fields, to strengthen the research environments in academic departments that are oriented primarily to teaching undergraduates in science and engineering, and to promote the coupling of research and education at predominantly undergraduate institutions. RUI provides support for research and research equipment for investigators in non-doctoral departments in predominantly undergraduate institutions. RUI proposals are evaluated and funded on a competitive basis by NSF's research programs. For further information contact the Division of Research Initiation and Improvement, Room 1225, NSF, Washington, DC 20550 (202/357-7456), or the appropriate NSF disciplinary program officer.

• The Career Access Opportunities in Science and Technology for Women, Minorities and the Disabled is an undergraduate program that supplements efforts at the pre-college level to address the underrepresentation of women, minorities and the disabled in the Nation's ranks of science and engineering professionals. There are two activities:

—Comprehensive Projects for Minorities supports the establishment of regional centers designed to increase the minority presence in science and engineering and to strengthen such efforts in institutions with significant minority enrollments, and

—Prototype and Model Projects for Women, Minorities and the Disabled encourages institutions to create special outreach programs for these target audiences.

For additional information contact the Office of Undergraduate Science, Engineering and Mathematics Education, Room 639, NSF, Washington, DC 20550 (202/357-7051).

• Research Opportunities for Women (ROW) provides funding opportunities for women scientists and engineers to begin their independent research careers, resume research, or advance their careers by increasing their research productivity. Additional information may be obtained by requesting NSF publication 86-61, by contacting the appropriate NSF disciplinary program officer, or by contacting the ROW Coordinator, NSF, Washington, DC 20550 (202/357-7734).

• The Visiting Professorships for Women Program (VPW) enables experienced women scientists and engineers to undertake advanced research at a host institution—a university or 4-year college which has the necessary facilities. In addition to her research responsibilities, the visiting professor undertakes lecturing, counseling and other activities to increase the visibility of women scientists in the academic environment of the host institution, and to provide encouragement for other women to pursue science, mathematics or engineering careers. Additional information may be obtained by contacting the VPW Program Director, Room 1225, NSF, Washington, DC 20550 (202/357-7734).

• The Minority Research Initiation Program (MRI) supports research by minority scientists and engineers who hold full-time faculty or research-related positions, who (1) are members of ethnic minority groups that are significantly underrepresented in the science and engineering career pool; (2) have not previously received Federal research support as faculty members; and (3) wish to initiate research efforts, thereby increasing their ability to compete successfully for other research support. Information about programs for minority scientists and engineers may be obtained from the MRI Program Director, Room 1225, NSF, Washington, DC 20550 (202/357-7350).

• NSF's Facilitation Awards for Handicapped Scientists and Engineers (FAH) activity enhances opportunities for disabled individuals to participate in research. Funds are provided to purchase special equipment, modify equipment, or provide other services required specifically for the work undertaken on an NSF-supported project (see NSF 84-62, Rev 5-87). Funds from regular program budgets are provided for handicapped senior personnel, other professionals, and students, as a supplement to an existing award or as part of a new award. General inquiries may be made to the Coordinator, Facilitation Awards for Handicapped Scientists and Engineers, Room 1225, NSF, Washington, DC 20550 (202/357-7456).

• The Undergraduate Curriculum Development Program includes two components: Engineering Curriculum Development and Calculus Curriculum Development.

—The Undergraduate Engineering Curriculum Development Program is designed to revise and improve undergraduate engineering education. There is a pressing need to revise the curricula of undergraduate engineering education with a view toward more emphasis on the laboratory experience and on technology-driven fields such as design, manufacturing, and computer-integrated engineering. There is also a need to explore the use of new technologies to improve the quality and productivity of the undergraduate engineering education system. Additional information about this program may be obtained from the Undergraduate Engineering Curriculum Development Program, Room 1238, NSF, Washington, DC 20550 (202/357-5102).

—The Division for Mathematical Sciences Undergraduate Curriculum Program supports proposals that will have significant impact on the nature of calculus instruction in this Nation through the development of model curricula and prototypical instructional materials. For additional information contact the Division of Mathematical Sciences, Room 339, NSF, Washington, DC 20550 (202/357-9669).

• Research Opportunity Awards permit faculty at institutions with limited research opportunities to work with investigators who already hold or are applying for an NSF research grant. For information on ROA, contact the Division of Research Initiation and Improvement, Room 1225, NSF, Washington, DC 20550 (202/357-7456).

• The NSF has several programs directed toward improving precollege science, mathematics and technology education. In most cases, college and university faculty write proposals and direct the projects supported by these programs. For information on Applications of Advanced Technologies, Informal Science Education, Instructional Materials Development, or Research in Teaching and Learning, contact the Division of Materials Development, Research and Informal Science Education, NSF, Washington, DC 20550 (202/357-7452). For information on Science and Mathematics Education Networks, Teacher Preparation, Teacher Enhancement, or Presidential Awards for Excellence in Science and Mathematics Teaching, contact the Division of Teacher Preparation and Enhancement, NSF, Washington, DC 20550 (202/357-7073).

• Information on Graduate Research Fellowships and Minority Graduate Research Fellowships may be obtained by contacting the National Research Council, 2101 Constitution Avenue, Washington, DC 20418.

• MOSIS (Metal-Oxide-Semiconductor Implementation Service) is a joint NSF/DARPA (Defense Advanced Research Projects Agency) program that allows qualifying universities to use the DARPA fast turnaround VLSI implementation facility as part of university based research and educational programs. Students taking undergraduate VLSI design courses can have digital systems that they design fabricated and packaged and returned to them for testing and experimentation. For more information, contact the Division of Microelectronic Information Processing Systems, Room 504, NSF, Washington, DC 20550 (202/357-7853).

The Foundation welcomes proposals on behalf of all qualified scientists and engineers, and strongly encourages women, minorities, and the disabled to compete fully in any of the programs described in this document.

In accordance with Federal statutes and regulations and NSF policies, no person on grounds of race, color, age, sex, national origin, or disability shall be excluded from participation in, denied the benefits of, or be subject to discrimination under any program or activity receiving financial assistance from the National Science Foundation.

NSF has TDD (Telephonic Device for the Deaf) capability which enables individuals with hearing impairment to communicate with the Division of Personnel and Management for information relating to NSF programs, employment, or general information. This number is (202) 357-7492.

The Foundation provides awards for research in the sciences and engineering. The awardee is wholly responsible for the conduct of such research and preparation of the results for publication. The Foundation, therefore, does not assume responsibility for such findings or their interpretation.

Catalog of Federal Domestic Assistance Numbers:

47.041 Engineering
47.049 Mathematical and Physical Sciences
47.050 Geosciences
47.051 Biological, Behavioral and Social Sciences
47.053 Scientific, Technological and International Affairs
47.070 Computer and Information Sciences and Engineering
47.071 Undergraduate Science, Engineering, and Mathematics Education

Special Requirements for Use of Animals, Human Subjects, Recombinant DNA

If any activity in the proposed work is likely to involve using non-human vertebrate animals, human subjects, or recombinant DNA techniques, additional information must be supplied. Please see Grants for Research and Education in Science and Engineering, NSF 83-57, rev 1/87, page 16 or contact NSF for details.

Robert F. Watson,

Acting Head, Office Undergraduate Science, Engineering and Mathematics Education.

September 18, 1987.

[FR Doc. 87-21906 Filed 9-22-87; 8:45 am]

BILLING CODE 7555-01-M

NUCLEAR REGULATORY COMMISSION

Bi-weekly Notice Applications and Amendments to Operating Licenses Involving No Significant Hazards Considerations

I. Background

Pursuant to Public Law (P.L.) 97-415, the Nuclear Regulatory Commission (the Commission) is publishing this regular bi-weekly notice. P.L. 97-415 revised section 189 of the Atomic Energy Act of 1954, as amended (the Act), to require the Commission to publish notice of any amendments issued, or proposed to be issued, under a new provision of section 189 of the Act. This provision grants the Commission the authority to issue and make immediately effective any amendment to an operating license upon a determination by the Commission that such amendment involves no significant hazards consideration, notwithstanding the pendency before the Commission of a request for a hearing from any person.

This bi-weekly notice includes all notices of amendments issued, or proposed to be issued from August 31, 1987 through September 11, 1987. The last bi-weekly notice was published on September 9, 1987 (52 FR 33997).

NOTICE OF CONSIDERATION OF ISSUANCE OF AMENDMENT TO FACILITY OPERATING LICENSE AND PROPOSED NO SIGNIFICANT HAZARDS CONSIDERATION DETERMINATION AND OPPORTUNITY FOR HEARING

The Commission has made a proposed determination that the following amendment requests involve no significant hazards consideration. Under the Commission's regulations in 10 CFR 50.92, this means that operation of the facility in accordance with the proposed amendments would not (1) involve a significant increase in the probability or consequences of an accident previously evaluated; or (2) create the possibility of a new or different kind of accident from any accident previously evaluated; or (3) involve a significant reduction in a margin of safety. The basis for this proposed determination for each amendment request is shown below.

The Commission is seeking public comments on this proposed determination. Any comments received within 30 days after the date of publication of this notice will be considered in making any final determination. The Commission will not normally make a final determination unless it receives a request for a hearing.

Written comments may be submitted by mail to the Rules and Procedures Branch, Division of Rules and Records, Office of Administration, U.S. Nuclear Regulatory Commission, Washington, DC 20555, and should cite the publication date and page number of this **Federal Register** notice. Written comments may also be delivered to Room 4000, Maryland National Bank Building, 7735 Old Georgetown Road, Bethesda, Maryland from 8:15 a.m. to 5:00 p.m. Copies of written comments received may be examined at the NRC Public Document Room, 1717 H Street, NW., Washington, DC. The filing of requests for hearing and petitions for leave to intervene is discussed below.

By October 23, 1987, the licensee may file a request for a hearing with respect to issuance of the amendment to the subject facility operating license and any person whose interest may be affected by this proceeding and who wishes to participate as a party in the proceeding must file a written petition for leave to intervene. Requests for a hearing and petitions for leave to intervene shall be filed in accordance with the Commission's "Rules of Practice for Domestic Licensing Proceedings" in 10 CFR Part 2. If a request for a hearing or petition for leave to intervene is filed by the above date, the Commission or an Atomic Safety and Licensing Board, designated by the Commission or by the Chairman of the Atomic Safety and Licensing Board Panel, will rule on the request and/or petition and the Secretary or the designated Atomic Safety and Licensing Board will issue a notice of hearing or an appropriate order.

As required by 10 CFR 2.714, a petition for leave to intervene shall set

forth with particularity the interest of the petitioner in the proceeding, and how that interest may be affected by the results of the proceeding. The petition should specifically explain the reasons why intervention should be permitted with particular reference to the following factors: (1) the nature of the petitioner's right under the Act to be made a party to the proceeding; (2) the nature and extent of the petitioner's property, financial, or other interest in the proceeding; and (3) the possible effect of any order which may be entered in the proceeding on the petitioner's interest. The petition should also identify the specific aspect(s) of the subject matter of the proceeding as to which petitioner wishes to intervene. Any person who has filed a petition for leave to intervene or who has been admitted as a party may amend the petition without requesting leave of the Board up to fifteen (15) days prior to the first prehearing conference scheduled in the proceeding, but such an amended petition must satisfy the specificity requirements described above.

Not later than fifteen (15) days prior to the first prehearing conference scheduled in the proceeding, a petitioner shall file a supplement to the petition to intervene which must include a list of the contentions which are sought to be litigated in the matter, and the bases for each contention set forth with reasonable specificity. Contentions shall be limited to matters within the scope of the amendment under consideration. A petitioner who fails to file such a supplement which satisfies these requirements with respect to at least one contention will not be permitted to participate as a party.

Those permitted to intervene become parties to the proceeding, subject to any limitations in the order granting leave to intervene, and have the opportunity to participate fully in the conduct of the hearing, including the opportunity to present evidence and cross-examine witnesses.

If a hearing is requested, the Commission will make a final determination on the issue of no significant hazards consideration. The final determination will serve to decide when the hearing is held.

If the final determination is that the amendment request involves no significant hazards consideration, the Commission may issue the amendment and make it immediately effective, notwithstanding the request for a hearing. Any hearing held would take place after issuance of the amendment.

If the final determination is that the amendment involves a significant hazards consideration, any hearing held would take place before the issuance of any amendment.

Normally, the Commission will not issue the amendment until the expiration of the 30-day notice period. However, should circumstances change during the notice period such that failure to act in a timely way would result, for example, in derating or shutdown of the facility, the Commission may issue the license amendment before the expiration of the 30-day notice period, provided that its final determination is that the amendment involves no significant hazards consideration. The final determination will consider all public and State comments received before action is taken. Should the Commission take this action, it will publish a notice of issuance and provide for opportunity for a hearing after issuance. The Commission expects that the need to take this action will occur very infrequently.

A request for a hearing or a petition for leave to intervene must be filed with the Secretary of the Commission, U.S. Nuclear Regulatory Commission, Washington, DC 20555, Attention: Docketing and Service Branch, or may be delivered to the Commission's Public Document Room, 1717 H Street, NW., Washington, DC, by the above date. Where petitions are filed during the last ten (10) days of the notice period, it is requested that the petitioner promptly so inform the Commission by a toll-free telephone call to Western Union at (800) 325-6000 (in Missouri (800) 342-6700). The Western Union operator should be given Datagram Identification Number 3737 and the following message addressed to (*Project Director*): petitioner's name and telephone number; date petition was mailed; plant name; and publication date and page number of this **Federal Register** notice. A copy of the petition should also be sent to the Office of the General Counsel-Bethesda, U.S. Nuclear Regulatory Commission, Washington, DC 20555, and to the attorney for the licensee.

Nontimely filings of petitions for leave to intervene, amended petitions, supplemental petitions and/or requests for hearing will not be entertained absent a determination by the Commission, the presiding officer or the presiding Atomic Safety and Licensing Board, that the petition and/or request should be granted based upon a balancing of factors specified in 10 CFR 2.714(a)(1)(i)-(v) and 2.714(d).

For further details with respect to this action, see the application for amendment which is available for public inspection at the Commission's Public Document Room, 1717 H Street, NW., Washington, DC, and at the local public document room for the particular facility involved.

Arizona Public Service Company et al., Docket No. STN 50-530, Palo Verde Nuclear Generating Station (PVNGS), Unit 3, Maricopa County, Arizona

Date of amendment request: July 23, 1987

Description of amendment request: The proposed amendment would allow sale and leaseback transactions by El Paso Electric Company (EL Paso) relating to their ownership interest in Palo Verde Unit 3. Specifically the application requests authorization by one of the co-owners to transfer all or a portion of their fee interest to equity investors and the simultaneous transfer by the equity investors back to this co-owner of a long term (approximately 29½ years) possessory leasehold interest of these shares under the terms described in the application and other identified documents. It is contemplated that the equity investors may be third parties affiliated with El Paso. These equity investors might include electric utilities, or affiliates or subsidiaries thereof, in which case antitrust considerations may be present. Under the proposed transaction, it is represented that El Paso will remain in possession of their present partial interest in Palo Verde Unit 3 under leasehold rather than by virtue of ownership. Arizona Public Service Company would continue to be the sole licensed operator of the facility.

The proposed amendment is similar to a request filed on October 18, 1985, by Arizona Public Service Company (APS) regarding the sale and leaseback transactions by Public Service Company of New Mexico (PNM) of a portion of PNM's ownership interests in PVNGS Unit 1. See 50 FR 45955. By Order of December 12, 1985, the Commission approved the proposed sale and leaseback transactions and authorized the amendment of the PVNGS Unit 1 license subject to certain conditions. On December 26, 1985, the PVNGS Unit 1 license was amended and conditioned pursuant to the Commission's Order. See 51 FR 1883. Additional similar sale and leaseback transactions have been approved by the NRC staff for Units 1 and 2.

Basis for No Proposed Significant Hazards Consideration Determination: The Commission has provided standards for determining whether a significant hazards consideration exists as stated in 10 CFR 50.92. A proposed amendment to an operating license for a facility involves no significant hazards

considerations if operation of the facility in accordance with a proposed amendment would not: (1) involve a significant increase in the probability or consequences of an accident previously evaluated; or (2) create the possibility of a new or different kind of accident from any accident previously evaluated; or (3) involve a significant reduction in a margin of safety.

A discussion of these standards as they relate to the amendment request follows:

Standard 1 - Involve a Significant Increase in the Probability or Consequences of an Accident Previously Evaluated

No change is involved in any aspect of plant design, criteria or operation of the unit. The proposed amendment does not, therefore, significantly increase the probability or consequences of an accident.

Standard 2 - Create the Possibility of a New or Different Kind of Accident From Any Accident Previously Evaluated

The proposed amendment does not affect any aspect of plant design, criteria or operation and does not affect any condition or parameter of the unit. For this reason, the NRC staff has determined that the proposed amendment does not create the possibility of a new or different kind of accident from any accident previously evaluated.

Standard 3 - Involve a Significant Reduction in a Margin of Safety

The requested amendment does not change any aspect of plant design, criteria or operation of the unit. For this reason, the NRC staff has determined that the proposed change does not involve a significant reduction in any margins of safety.

The proposed amendment would maintain co-owner EL Paso in possession of their present interest in Unit 3 as lessee and El Paso would continue to be obligated to pay its share of all costs of construction, maintenance, operation, capital improvements and decommissioning. The equity investors do not have any rights of possession in, absent further license amendment, or control over PVNGS. Arizona Public Service Company would continue to be the sole licensee authorized to use and operate the facility.

Based on the above considerations, the Commission proposes to determine that the proposed change does not involve a significant hazards consideration.

Local Public Document Room location: Phoenix Public Library, Business, Science and Technology Department, 12 East McDowell Road, Phoenix, Arizona 85004.

Attorney for licensees: Mr. Arthur C. Gehr, Snell & Wilmer, 3100 Valley Center, Phoenix, Arizona 85007.

NRC Project Director: George W. Knighton

Carolina Power & Light Company, et al., Docket Nos. 50-325 and 50-324, Brunswick Steam Electric Plant, Units 1 and 2, Brunswick County, North Carolina

Date of application for amendments: October 24, 1984, as supplemented February 27, 1985, July 8, 1985, and March 17, 1987.

Description of amendment request: This proposed revision to the Technical Specifications (TS) of Brunswick Steam Electric Plant, Units 1 and 2, was noticed on March 27, 1985 (50 FR 12139), and renoticed August 28, 1985 (50 FR 34934). However, on March 17, 1987, additional information was provided by the licensee. As previously proposed, the amendments would change the Limiting Condition for Operation (LCO), the Surveillance Requirements, and the associated bases for TS 3/4.6.1.3, Primary Containment Air Locks, to address the air lock door interlocks specifically. Additionally, the TS will be reformatted to follow more closely the guidance of the NUREG-0123, Standard Technical Specifications.

In the licensee's March 17, 1987 submittal, the request was modified to include a revision to TS 4.6.1.3 that would require the determination of the seal leakage rate of the containment air lock doors after their use, even though no maintenance has been performed. In addition, changes were made in TS 4.6.1.3.c to require verification of air lock interlock operability.

The current TS does not specifically address an inoperable door interlock in the LCO. As such, it could be interpreted that an inoperable door interlock falls outside the air lock "degraded mode" permitted by Action statement 3.6.1.3.a and b. Were that to be the interpretation, this interlock would fall under Action statement 3.6.1.3.c, for an inoperable primary containment air lock, which directs the plant to be in hot shutdown within the next 12 hours and in cold shutdown within the following 24 hours if the air lock is declared inoperable. CP&L has concluded that this was not the intent of the TS, since an inoperative door interlock is clearly of a similar nature as the "degraded mode" permitted by Action statement 3.6.1.3.a and b.

The current TS requires that the operation of the air lock door interlock be verified every six months. This verification presents the following problems:

(1) The interlock surveillance is performed independently of the air lock operability requirements.

(2) The interlock surveillance cannot be performed when the unit is at power with the drywell inerted, as the drywell is inaccessible.

(3) A low power drywell entry, just to perform the interlock surveillance, would present an unnecessary safety hazard and increase radiation exposure to personnel performing the test.

The proposed revisions to TS 3/4.6.1.3 will present the following resolutions:

(1) Action statement 3.6.1.3.b will be revised to provide the specific action to be taken in the event of an inoperable air lock door interlock. In the event of an inoperable air lock door interlock, the inner air lock door will be maintained locked closed and verified locked at least once per 31 days, until the interlock is restored to operable status.

(2) The proposed revision of Surveillance Requirement 4.6.1.3.a includes a requirement to determine the seal leakage rate of the primary containment air lock doors after their use when no maintenance has been performed, and after a seal replacement.

(3) Surveillance Requirement 4.6.1.3.c has been revised to require verification of air lock interlock operability: (a) prior to establishing primary containment integrity when the air lock has been used; (b) prior to and following a drywell entry when primary containment integrity is required; and (c) following the performance of maintenance affecting the air lock interlock.

Item (a) ensures the interlock is operable prior to entering an operating mode requiring primary containment integrity. Item (b) ensures the operability of the interlock during during periods when containment integrity is required and the air lock is being used for primary containment access. Item (c) ensures post-maintenance testing of the interlock. This test frequency is consistent with the intent of, and more restrictive than the guidance of NUREG-0123, the Standard Technical Specifications (STS) for General Electric Boiling Water Reactors. Additionally, the TS is being reformatted to be consistent with the STS. The STS requires verification of the air lock interlock operability at least once per six months, except that the inner door need not be opened to verify interlock operability when the primary containment is inerted.

Basis for proposed no significant hazard consideration determination:

The Commission has provided standards in 10 CFR 50.92(c) for determining whether or not a no significant hazards consideration exists. A proposed amendment to an operating license for a facility involves no significant hazards consideration if operation of the facility in accordance with the proposed amendment would not: (1) involve a significant increase in the probability or consequences of an accident previously evaluated; or (2) create the possibility of a new or different kind of accident from any accident previously evaluated; or (3) involve a significant reduction in a margin of safety. The pending amendment request was prenoticed on March 27, 1985 (50 FR 12139), and again on August 28, 1985, (50 FR 32934). The licensee has provided the following analysis of the additional changes:

1. The proposed additional changes do not involve a significant increase in the probability or consequences of an accident previously evaluated. The requirement to verify the seal leakage rate of the primary containment air lock doors after their use when no maintenance has been performed constitutes an additional control not presently included in the Brunswick TSs. This provides added assurance of air lock operability. The proposed revision to the air lock interlock testing frequency provides additional assurance of interlock operability when primary containment integrity is required. The surveillance schedule is expanded to verify interlock operability prior to establishing containment integrity and prior to and following drywell entry, when containment integrity is required. This schedule for testing interlock operability prior to and following a challenge of the system, rather than on an arbitrary six-month frequency, will not increase the probability of an air lock or air lock interlock failure when called upon to perform their safety functions. Changes in surveillance requirements do not affect the consequences of air lock or air lock interlock failure.

2. The proposed additional changes do not create the possibility of a new or different kind of accident than previously evaluated because revision of the surveillance requirements associated with the air locks and air lock interlocks does not affect the method in which the air locks perform their intended safety function. Assurance of the ability to maintain containment integrity is enhanced through the revised surveillance requirements. Additionally, the air locks and air lock interlocks are designed to maintain containment integrity whenever it is required and, thereby, mitigate the consequences of an accident.

3. The proposed additional changes do not involve a significant reduction in a margin of safety. The expanded surveillance requirements for air lock seal and air lock interlock verification provide additional assurance of air lock operability and would not involve a reduction in the margin of safety.

Based on the above reasoning, the Commission has determined that the additional changes to the pending request do not involve a significant hazards consideration.

Local Public Document Room location: University of North Carolina at Wilmington, William Madison Randall Library, 601 S. College Road, Wilmington, North Carolina 28403-3297.

Attorney for licensee: Thomas A. Baxter, Esquire, Shaw, Pittman, Potts and Trowbridge, 2300 N Street, NW., Washington, DC 20037.

NRC Project Director: Elinor G. Adensam

Carolina Power & Light Company, Docket Nos. 50-325 and 50-324, Brunswick Steam Electric Plant, Units 1 and 2, Brunswick County, North Carolina

Dates of Application for amendments: June 12, 1987, as supplemented September 10 and 11, 1987

Description of amendment requests: The proposed amendments would change the Technical Specifications (TS) for Brunswick Steam Electric Plant (BSEP), Units 1 and 2, relative to the description of the fuel used in the core in TS Section 5.3.1 and the fuel storage parameters in TS Sections 5.6.1.1 and 5.6.1.2.

Currently, TS 5.3.1 delineates the fuel types existing in the reactor core and provides maximum average enrichments for the initial core loading and reload fuel assemblies. The proposed amendment would add General Electric fuel 8 x 8 EB (GE8) to the list of fuels in the core and would remove the limitations on the maximum fuel enrichments. The new extended burnup fuel (GE8) will be used with various fuel enrichments. The acceptability of the GE8 fuel for operation in the core will be ensured by the performance of a cycle-specific safety analysis. The revised TS Sections 5.6.1.1 and 5.6.1.2 impose infinite lattice multiplication factor (k-infinity) limitations, which ensure the fuel can be safely handled and stored.

TS Section 5.6.1.1 requires that the new fuel storage racks be maintained so there is sufficient center-to-center distance between stored fuel assemblies to ensure a k_{eff} equivalent to less than 0.90 when dry and less than 0.95 when flooded with unborated water. The proposed change specifies that this requirement is met by limiting the k-infinity of new fuel assemblies to less than or equal to 1.31 in an infinite core geometry lattice. The new fuel storage racks at both BSEP-1 and BSEP-2 are General Electric, low-density, new fuel storage racks. New fuel assemblies with an initial k-infinity limit of 1.31 will be subcritical in the new fuel storage racks without concern for their initial U-235 enrichment. This limit has been approved by the NRC and is documented in Section 3.3.2.1.4 of GESTAR II, NEDE-24011-P-A-8.

The final change involves TS Section 5.6.1.2. Currently, TS Section 5.6.1.2 requires that the spent fuel storage racks be maintained so there is sufficient center-to-center distance between stored fuel assemblies to ensure a k_{eff} equivalent to less than 0.95 with the storage pool filled with unborated water. The current specification also limits the maximum enrichment of fuel contained in the spent fuel pool to 3.2 weight percent U-235 for PWR fuel assemblies and 3.0 weight percent U-235 for BWR fuel assemblies and the U-235 per axial centimeter to 41 gm/cm for PWR assemblies and 15.6 gm/cm for BWR assemblies. The proposed revision restricts the k-infinity of the fuel rather than the U-235 enrichment and axial weight distribution.

The BSEP-1 and BSEP-2 spent fuel pools contain three types of spent fuel storage racks: high-density, poisoned General Electric designed BWR fuel storage racks; high-density, unpoisoned BWR fuel storage racks; and high-density, unpoisoned PWR fuel storage racks. The NRC has approved a generic limit for the k-infinity of fuels stored in the General Electric supplied fuel racks. This limit is documented in Section 3.3.2.1.4 of GESTAR II, NEDE-24011-P-A-8. The limiting k-infinity is 1.33; associated with the General Electric high-density, poisoned rack design.

The criticality analysis for the remaining two rack designs employed at the Brunswick Plant was approved by the NRC upon issuance of Amendments 8 and 30 to the Facility Operating Licenses for Brunswick Steam Electric Plant, Units 1 and 2, on August 26, 1977. This criticality analysis assumed spent fuel stored in the high-density, unpoisoned PWR and BWR racks had a maximum assembly average loading of 3.2 weight percent U-235 for PWR fuel assemblies and 3.0 weight percent U-235 for BWR fuel assemblies. General Electric Company has performed an

analysis and determined the 3.2 weight percent U-235 PWR fuel has a corresponding k-infinity of 1.416 ± 0.005 and 3.0 weight percent U-235 BWR fuel assemblies have a corresponding k-infinity of 1.344 ± 0.005. The revised k-infinity limits of TS Section 5.6.1.2.a and 5.6.1.2.b are conservatively established at 1.41 and 1.33, respectively.

Basis for proposed no significant hazards consideration determination: The Commission has provided standards for determining whether a no significant hazards consideration exists as stated in 10 CFR Part 50.92(c). A proposed amendment to an operating license involves no significant hazards considerations if operation of the facility in accordance with the proposed amendment would not: (1) involve a significant increase in the probability or consequences of an accident previously evaluated, or (2) create the possibility of a new or different kind of accident from any accident previously evaluated, or (3) involve a significant reduction in a margin of safety.

The licensee has evaluated the proposed amendment against the standards in 10 CFR Part 50.92 and has determined the following:

1. Specification 5.3.1 was revised to allow for the use of GE 8 x 8EB fuel (GE8). The NRC has separately approved GE's high exposure fuel design via a letter from H. N. Berkow (NRC) to J. S. Charnley (GE) entitled "Acceptance for Approval of Fuel Designs Described in Licensing Topical Report NEDE-24011-P-A-8, Amendment 10 for Extended Burnup Operation," dated December 3, 1985. Permission to reference this topical report was given in a letter from C. O. Thomas (NRC) to J. S. Charnley dated August 13, 1985 entitled "Acceptance for Referencing of Licensing Topical Report NEDE-22148-P, 'Extended Burnup Evaluation Methodology.'" The impact of high exposure fuel on fuel handling accident evaluations was considered by the NRC as part of these reviews

Examination of fission yield curves for Pu-239 and U-235 indicates no significant differences in yields of iodine and xenon isotopes, however, U-235 yields are slightly larger for major xenon and iodine isotopes. Examination of Pu-239 fission yields indicates no other volatile radioactive isotope not currently considered would be produced in significant quantities. Therefore, the contribution of fission product gases from Pu-239 at higher burnup will not significantly change the total inventory of fission product gases generated.

Fuel rod design feature improvements have been introduced as part of the GE8 high burnup fuel design. These design feature improvements increase the fuel pellet thermal conductivity as well as the thermal conductance between the fuel pellet and cladding, thereby significantly reducing operating fuel temper atures and attendant fission gas release. These features of the GE8 design have been reviewed and accepted by the NRC via a letter from H. N. Berkow (NRC) to J. S. Charnley (GE) entitled "Acceptance for Approval of Fuel Designs Described in Licensing Topical Report NEDE-24011-P-A-8, Amendment 10 for Extended Burnup Operation," dated December 3, 1985.

The overall result of these design improvements is a reduction in the inventory of gaseous fission products released from the fuel pellet to the fuel rod void volume for the GE8 fuel design at its design exposure as compared to the P8 x 8R fuel design at its design exposure. Therefore the consequences of a fuel handling accident involving GE8 fuel are not increased and are bounded by the existing analysis.

The revisions to Specifications 5.6.1.1 and 5.6.1.2 impose criticality limitations which ensure that fuel can be safely handled and stored. Basing these limitations on k-infinity rather than the maximum U-235 enrichment and axial gm/cm prevents inadvertent criticality while allowing the handling and storage of higher enrichment GE8 fuel assemblies. Use of such high burnup fuel assemblies will also reduce the probability of a fuel handling accident because, over the life of the plant, fewer assemblies will be discharged from the core. The proposed changes to Specifications 5.6.1.1 and 5.6.1.2 are more restrictive than the existing Technical Specifications. The revision to Specification 5.6.1.1 provides a k-infinity limit to ensure the k_{eff} limits are met. The k-infinity limit established in Specification 5.6.1.2.a is 1.41, slightly less than the k-infinity determined by General Electric at the lower 2(sigma) tolerance for the PWR fuel assembly analyzed. The k-infinity limit established in Specification 5.6.1.2.b for BWR fuel is 1.33, the more restrictive k-infinity limit for General Electric designed, high-density, poisoned BWR storage racks.

Thus, for the reasons described above, the proposed amendment does not involve a significant increase in the probability or consequences of an accident previously evaluated.

2. As stated in response to Item 1 above, the proposed revisions allow the use of GE8 fuel assemblies which have been approved by the NRC. In addition, the revised Specifications 5.6.1.1 and 5.6.12 are more restrictive than those currently existing in the TS. The new fuel design is not significantly different than any previously used.

The proposed amendment does not affect the method in which any safety-related equipment achieves its safety function. The equipment, methods, and procedures for handling fuel assemblies are not affected by the proposed changes.

Thus, for the reasons described above, the proposed change does not create the possibility of a new or different kind of accident from any accident previously evaluated.

3. The proposed k-infinity limitations provide margin which is equivalent to the enrichment limitation which currently exists for the PWR fuel and more restrictive than the enrichment limitations which currently exist for the BWR fuel.

As stated in response to Items 1 and 2 above, the impact of high exposure fuel was considered by the NRC as part of the review of GE's high exposure fuel design. It was concluded that the radiological consequences of a fuel handling accident involving GE8 fuel would be the same as for existing fuel and would be well within the guidelines established in 10 CFR Part 100. In addition, pool cleanup and ventilation, as well as heat load, will not be significantly affected by the change. Progressively higher burnup fuel has been off-loaded each cycle at BSEP and some charge burnup has increased from approximately 12,000 MWD/MT to approximately 29,000 MWD/MT at BSEP-1 and from approximately 9,000 MWD/MT to approximately 25,000 MWD/MT at BSEP-2. Batch average discharge burnup at each of the plants would be expected to increase incrementally to reach approximately 36,000 MWD/MT over the next five cycles. Experience in the BSEP spent fuel pools indicates no long term trends of substantially increasing activity or heat load as a result of increasing burnup as discharged fuel burnup has increased (other than that attributable to and spent fuel capacity and loading expansion). As there is no major change in the GE8 fuel design or manufacturing processes from those currently in use, this prior experience is concluded to be applicable. Previously implemented fuel design improvements to improve fuel performance and failure resistance are not expected to be compromised by higher burnup applications.

The primary change to heat load results from the number of fuel assemblies discharged from the core. For a given cycle length, fewer assemblies would be discharged in a high burnup fuel cycle than normally

discharged, thereby reducing the probability of a fuel handling accident and potentially increasing the margin of safety. Evaluations indicate that for the highest discharge batch size anticipated in a high burnup scenario in which the entire spent fuel pool is assumed to be filled with high burnup fuel, spent fuel pool heat load is bounded by previously submitted and NRC approved analysis.

Thus, for the reasons stated above, the proposed amendment does not involve a significant reduction in the margin of safety.

Based on the above reasoning, the licensee has determined that the proposed amendment does not involve a significant hazards consideration.

The NRC staff has reviewed the licensee's no significant hazards consideration determination and agrees with the licensee's analysis. Based on this review, the staff, therefore, proposes to determine that the requested amendment does not involve a significant hazards consideration.

Local Public Document Room location: University of North Carolina at Wilmington, William Madison Randall Library, 601 S. College Road, Wilmington, North Carolina 28403-3297

Attorney for licensee: Thomas A. Baxter, Esquire, Shaw, Pittman, Potts and Trowbridge, 2300 N Street, NW., Washington, DC 20037

NRC Project Director: Elinor G. Adensam

Carolina Power & Light Company, Docket No. 50-261, H. B. Robinson Steam Electric Plant, Unit No. 2, Darlington County, South Carolina

Date of amendment request: June 16, 1987.

Description of amendment request: The proposed amendment would revise the following:

Change 1. Technical Specifications (TS) sections 3.11 Basis, and section 4.11.1.4, to delete unnecessary reference to the total number of flux thimbles available for movable incore flux instrumentation for the H. B. Robinson Steam Electric Plant, Unit No. 2.

Change 2. TS Table 3.5-6, item 2a and Table 4.19-1, to correct for plant modification (addition) required by Regulatory Guide 1.97.

Change 3. TS Table 4.1-1, Item 10, to correct an inadvertent omission of Remark 2 to Item 10 of the Table. This error occurred in Amendment 97 due to a retyped version of the page containing the omission.

Basis for proposed no significant hazards consideration determination: The Commission has provided standards for determining whether a no significant hazards consideration exists as stated in 10 CFR 50.92(c). A proposed amendment to an operating license involves no significant hazards consideration if operation of the facility in accordance with the proposed amendment would not: (1) involve a significant increase in the probability or consequences of an accident previously evaluated; or (2) create the possibility of a new or different kind of accident from any accident previously evaluated; or (3) involve a signifcant reduction in a margin of safety.

Carolina Power and Light Company has reviewed their proposed change in accordance with 10 CFR 50.92(c) and has made determinations identified with each change as follows:

Change 1.

a. Operation of the facility in accordance with the proposed amendment would not involve a significant increase in the probability of consequences of an accident previously analyzed, because the amendment simply eliminates an informational statement. All functional requirements of flux thimble availability for recalibration of the excore symmetrical-offset detection system and for flux mapping remain intact.

b. Operation of the facility in accordance with the proposed amendment would not create the possibility of a new or different kind of accident from any previously evaluated, because the amendment simply eliminates an informational statement. All functional requirements of flux thimble availability for recalibration of the excore symmetrical-offset detection system and for flux mapping remain intact.

c. Operation of the facility in accordance with the proposed amendment would not involve a significant reduction in a margin of safety, because the amendment simply eliminates an informational statement. All functional requirements of flux thimble availability for recalibration of the excore symmetrical-offset detection system and for flux mapping remain intact.

Change 2.

a. Operation of the facility in accordance with the proposed amendment would not involve a significant increase in the probability of consequences of an accident previously analyzed, because the new configuration will improve monitoring sensitivity by reducing dilution and provide additional information as to which steam generator is the source of the primary coolant leakage.

b. Operation of the facility in accordance with the proposed amendment would not create the possibility at a new or different kind of accident from any previously evaluated, because the new configuration will improve monitoring sensitivity by reducing dilution and provide additional information as to which steam generator is the source of the primary coolant leakage.

c. Operation of the facility in accordance with the proposed amendment would not involve a significant reduction in a margin of safety, because the new configuration will improve monitoring sensitivity by reducing dilution and provide additional information as to which steam generator is the source of the primary coolant leakage.

Change 3.

a. Operation of the facility in accordance with the proposed amendment would not involve a significant increase in the probability of consequences of an accident previously analyzed, because this is an administrative change simply correcting a typographical error. It has no functional impact upon the operation of the facility, except to reinstate a notation on the TS Table which was not intended to have been removed.

b. Operation of the facility in accordance with the proposed amendment would not create the possibility of a new or different kind of accident from any previously evaluated, because this is an administrative change simply correcting a typographical error. It has no functional impact upon the operation of the facility, except to reinstate a notation on the TS Table which was not intended to have been removed.

c. Operation of the facility in accordance with the proposed amendment would not involve a significant reduction in a margin of safety, because this is an administrative change simply correcting a typographical error. It has no functional impact upon the operation of the facility, except to reinstate a notation on the TS Table which was not intended to have been removed.

The NRC staff has reviewed the licensee's determination and agrees with their evaluation in this regard and, therefore, proposes to determine that the proposed changes do not involve a significant hazards consideration.

Local Public Document Room location: Hartsville Memorial Library, Home and Fifth Avenues, Hartsville, South Carolina 29535

Attorney for licensee: Shaw, Pittman, Potts, and Trowbridge, 2300 N Street, NW., Washington, DC 20037

NRC Project Director: Elinor G. Adensam

Dairyland Power Cooperative, Docket No. 50-409, LaCrosse Boiling Water Reactor, LaCrosse, Wisconsin

Date of amendment request: August 18, 1987

Description of amendment request: The licensee proposes that License No. DPR-45 for the permanently shutdown and defueled LaCrosse Boiling Water Reactor (LACBWR) be amended to revise the Technical Specifications (TS) to reduce the required size of the fire brigade from five persons to three persons with offsite fire protection resources remaining the same.

Basis for proposed no significant hazards consideration determination: The Commission has provided standards for determining whether a significant hazards consideration exists (10 CFR 50.92(c)). A proposed amendment to an operating license for a facility involves no significant hazards consideration if operation and/or maintenance of the facility in accordance with the proposed amendment would not: (1) involve a significant increase in the probability or consequences of an accident previously evaluated; (2) create the possibility of a new or different kind of accident from any accident previously evaluated; or (3) involve a significant reduction in a margin of safety.

The licensee evaluated the proposed changes in accordance with the standards of 10 CFR 50.92(c) and determined that the proposed amendment will not:

(1) involve a significant increase in the probability or consequences of an accident previously evaluated. LACBWR has been permanently shutdown and defueled. Reducing the size of the fire brigade and reorganizing the staff are administrative changes. These administrative changes at a plant which is shutdown do not involve a significant increase in the probability or consequences of any accident previously analyzed.

(2) create the possibility of a new or different kind of accident from any accident previously evaluated. The proposed changes to fire brigade composition and staff organization and responsibilities are strictly administrative type changes. They do not affect any mode of operation with the plant permanently shutdown and so cannot create the possibility of a new or different kind of accident from any previously evaluated.

(3) involve a significant reduction in a margin safety. The proposed changes to fire brigade composition and staff organization and responsibilities are administrative in nature. Therefore, they do not affect any margin of reactor safety. Since the plant has been permanently shutdown, the potential consequences to plant safety of a fire are greatly reduced and so decreasing the fire brigade size will not reduce plant safety below that which existed during plant operation.

Based on the above, the licensee has determined that the proposed amendment does not involve a significant hazards consideration. The NRC staff has reviewed the licensee's no significant hazards consideration determination and agrees with the licensee's analysis. Accordingly, the Commission proposes to determine that the requested amendment does not involve a significant hazards consideration.

Local Public Document Room location: LaCrosse Public Library, 800 Main Street, LaCrosse, Wisconsin 54601.

Attorney for licensee: Kevin Gallen, Esquire, Newman and Holtzinger, 1615 L Street, NW., Washington, DC 20036.

NRC Project Director: Lester S. Rubenstein

Dairyland Power Cooperative, Docket No. 50-409, LaCrosse Boiling Water Reactor, LaCrosse, Wisconsin

Date of amendment request: August 21, 1987 as revised August 28, 1987

Description of amendment request: The licensee proposes that License No. DPR-45 for the permanently shutdown and defueled LaCrosse Boiling Water Reactor (LACBWR) be amended to revise the Technical Specifications (TS) to delete the Type A containment building integrated leak rate tests.

Basis for proposed no significant hazards consideration determination: The Commission has provided standards for determining whether a significant hazards consideration exists (10 CFR 50.92(c)). A proposed amendment to an operating license for a facility involves no significant hazards consideration if operation and/or maintenance of the facility in accordance with the proposed amendment would not: (1) involve a significant increase in the probability or consequences of an accident previously evaluated; (2) create the possibility of a new or different kind of accident from any accident previously evaluated; or (3) involve a significant reduction in a margin of safety.

The licensee evaluated the proposed changes in accordance with the standards of 10 CFR 50.92(c) and determined that the proposed amendment would not:

(1) involve a significant increase in the probability or consequences of an accident previously evaluated. Elimination of Type A testing cannot cause an increase in the probability of an accident. Since LACBWR has been permanently shutdown and defueled, the Containment Building is not needed to protect the public against the design basis accident of a pipe break. Neither the fuel handling accident, nor the cask drop accident, as previously analyzed, assumes any credit for containment integrity. Therefore, elimination of Type A testing of the containment will not involve a significant increase in the consequences of an accident previously evaluated.

(2) create the possibility of a new or different kind of accident from any accident previously evaluated. Elimination of Type A testing only serves to remove the assurance that the containment pressure boundary will limit leakage during a postulated accident. Deletion of the testing requirement cannot create the possibility of any new or different kind of accident from any previously evaluated since the spent fuel accident analysis does not take any credit for containment integrity.

(3) involve a significant reduction in a margin of safety. Since the plant has been permanently shutdown and defueled, the only remaining postulated fuel damage accidents are those involving fuel handling or a cask drop. Since the analyses for both these events did not assume any containment, elimination of Type A testing will not involve a significant reduction in the margin of safety.

Based on the above, the licensee has determined that the proposed amendment does not involve a significant hazards consideration. The NRC staff has reviewed the licensee's no significant hazards consideration determination and agrees with the licensee's analysis. Accordingly, the Commission proposes to determine that the requested amendment does not involve a significant hazards consideration.

Local Public Document Room location: LaCrosse Public Library, 800 Main Street, LaCrosse, Wisconsin 54601.

Attorney for licensee: Kevin Gallen, Esquire, Newman and Holtzinger, 1615 L Street, NW., Washington, DC 20036.

NRC Project Director: Lester S. Rubenstein

Duke Power Company, et al., Docket Nos. 50-413 and 50-414, Catawba Nuclear Station, Units 1 and 2, York County, South Carolina

Date of amendment request: June 12, 1987, as supplemented July 9, 1987

Description of amendment request: The proposed amendments would revise Technical Specification (TS) Table 3.3-12 "Radioactive Liquid Effluent Monitoring Instrumentation," Table 4.3-8 "Radioactive Liquid Effluent Monitoring Instrumentation Surveillance Requirements," and Table 4.11-1 "Radioactive Liquid Waste Sampling and Analysis Program" to add operability and surveillance requirements for radioactive liquid effluent monitoring instrumentation for water from the turbine building sump after treatment by an alternate demineralizer system. The proposed amendments would provide program requirements for the sampling and analysis of the demineralized sump water and its surveillance by radiation monitor EMF-31 before discharge into the Low Pressure Service Water System.

The Radwaste Treatment System (capacity 16,000 to 18,000 gallons per day) will remain the primary treatment system for processing highly contaminated wastes. The licensee proposes to install portable equipment to demineralize the larger volumes of slightly radioactive wastewater, 72,000 gallons per day or more, which can result from primary-to-secondary leaks in the steam generators. The turbine building sump also receives waste water with very low levels of radioactivity from other sources such as floor drains and the auxiliary building drain sump. The treated waste water would be discharged through radiation monitor EMF-31 into the effluent from the Low Pressure Service Water System.

The radioactive release rates would meet 10 CFR Part 20 Appendix B limits. The NRC dose limit imposed by the Technical Specifications and 10 CFR Part 50 would also be met. The discharges would also be sampled and monitored in compliance with the NPDES permit. Turbine sump water meeting these requirements without treatment could be discharged directly through radiation monitor EMF-31 to the Conventional Wastewater Treatment System.

Table 4.11-1 specifies the supplemental wastewater sampling and analysis requirements when the EMF-31 monitoring channel is operable. In the event that the EMF-31 monitor is not operable, the more frequent sampling and analysis schedule is specified in Table 3.3-12, Action 42.

Basis for proposed no significant hazards consideration determination: The Commission has provided certain examples (51 FR 7744) of actions likely to involve no significant hazards considerations. The request involved in this case does not match any of those examples. However, the staff has reviewed the licensee's request for the above amendments and determined that should this request be implemented, it would not (1) involve a significant increase Sholly in the probability or consequences of an accident previously evaluated because the addition of wastewater demineralizing equipment would not affect the probability of previously evaluated accidents and would mitigate their offsite dose consequences. The TS requirements for the operability and surveillance of the liquid effluent monitoring instrumentation would ensure that no unacceptable concentrations of radioactive effluents would be released offsite and that there would be no increased risk to public health and safety.

Also, the proposed amendments would not (2) create the possibility of a new or different kind of accident from any accident previously evaluated because the changes do not affect the design or operation of any safety-related systems. Furthermore, by providing additional equipment for decontaminating wastewater, the likelihood of offsite dose consequences to the public is decreased. For the reasons stated in item (2) above, the proposed changes would not (3) involve a significant reduction in a margin of safety.

Accordingly, the Commission proposes to determine that the above changes involve no significant hazards consideration.

Local Public Document Room location: York County Library, 138 East Black Street, Rock Hill, South Carolina 29730

Attorney for licensee: Mr. Albert Carr, Duke Power Company, 422 South Church Street, Charlotte, North Carolina 28242

NRC Project Director: Kahtan N. Jabbour, Acting Director

Duke Power Company, et al., Docket Nos. 50-413 and 50-414, Catawba Nuclear Station, Units 1 and 2, York County, South Carolina

Date of amendment request: July 31, 1987

Description of amendment request: The proposed amendments would revise the limiting condition for operation (LCO) action statements of Technical Specification (TS) 3.5.1.1 to increase the time allowance for restoration of boron concentration in a cold leg injection accumulator that is out of specifications. The TSs associated with the accumulators are intended to ensure that a sufficient volume of borated water will be immediately forced into the core in the event the reactor coolant system pressure falls below the pressure of the accumulators. The proposed amendments to the LCO action statements would continue to ensure that, in the event of a loss-of-coolant accident (LOCA), a sufficient amount of borated water will be injected into the core to maintain adequate cooling. The time extension is dependent upon the weighted average of the boron concentration in the three limiting accumulators. Associated TS bases 3/4.5.1 "Accumulators" would also be revised to reflect the proposed changes to TS 3.5.1.1. These changes are intended to reduce the number of unnecessary plant mode changes and provide the operator more time in which to diagnose and correct low boron concentration while maintaining plant conditions which satisfy safety analyses assumptions.

Basis for proposed no significant hazards consideration determination: The Commission has provided certain examples (51 FR 7744) of actions likely to involve no significant hazards considerations. The request involved in this case does not match any of those examples. However, the staff has reviewed the licensee's request for the above amendments and determined that should this request be implemented, it would not (1) involve a significant increase in the probability or consequences of an accident previously evaluated because the increase in probability of a LOCA when an accumulator is declared inoperable for the proposed extended time limit is negligible. The increase in consequences is also negligible because the volume weighted boron concentration average of 1500 ppm in the three limiting accumulators would provide adequate reactor shutdown capability without control rod availability. Also, the proposed amendments would not (2) create the possibility of a new or different kind of accident from any accident previously evaluated because the changes do not significantly increase the probability of a LOCA, and no hardware changes are made to create a new failure or accident sequence. Similarly, the proposed amendments would not (3) involve a significant reduction in a margin of safety because the volume of borated water to be delivered to the core is unaffected, and

the boron concentration would not fall below 1500 ppm.

Accordingly, the Commission proposes to determine that this request does not involve a significant hazards consideration.

Local Public Document Room location: York County Library, 138 East Black Street, Rock Hill, South Carolina 29730

Attorney for licensee: Mr. Albert Carr, Duke Power Company, 422 South Church Street, Charlotte, North Carolina 28242

NRC Project Director: Kahtan N. Jabbour, Acting Director

Gulf States Utilities Company, Docket No. 50-458, River Bend Station, Unit 1 West Feliciana Parish, Louisiana

Date of amendment request: August 5, 1987 as supplemented August 24, 1987.

Description of amendment request: The proposed amendment would revise License Condition 2.C(14), Emergency Response Capabilities, Attachment 5, Item 2. Item 2. of Attachment 5 to the license, requires that prior to the startup from the first refueling outage, the licensee shall implement modifications (installation or upgrade), for items 2.(a) through 2.(h), consistent with the guidance of Regulatory Guide 1.97, Revision 2. The proposed amendment would change the required implementation date for item 2.(a) of Attachment 5, neutron flux, from prior to the startup from the first refueling outage until prior to the startup from the second refueling outage. The remaining items 2.(b) through 2.(h) would continue to be required to be implemented prior to the startup from the first refueling outage. The proposed changes to Attachment 5 are to delete the current item 2.(a), neutron flux; add a new item 3. that requires the neutron flux instrumentation to be installed prior to the startup from the second refueling outage; and redesignate current items 2.b through 2.h to be items 2.a through 2.g.

Basis for proposed no significant hazards consideration determination: The Commission has provided standards for determining whether a significant hazards consideration exists as stated in 10 CFR 50.92(c). A proposed amendment to an operating license for a facility involves no significant hazards consideration if operation of the facility in accordance with the proposed amendment would not: (1) involve a significant increase in the probability or consequences of an accident previously evaluated; or (2) create the possibility of a new or different kind of accident from any accident previously evaluated; or (3) involve a significant reduction in a margin of safety. The licensee provided an analysis that addressed the above three standards in the amendment application.

1. No significant increase in the probability or the consequences of an accident previously evaluated results from this change because:

There is no change in system design or operation. The license condition currently requires upgrade of neutron monitoring system (NMS) during the first refueling outage. This change will extend the modifications to the second refueling outage (RF2). This license condition proposed change will allow operation with the currently installed system which has previously been accepted for interim operation. This system is required to provide neutron flux indication and is not postulated to initiate any accidents. Therefore, delay in upgrade in Regulatory Guide (RG) 1.97 requirements will not significantly increase the probability of an accident. The neutron monitoring system is used to verify reactor shutdown as part of the Emergency Operating Procedures (EOPs). The use of neutron monitoring in the EOPs is conservative in that, if it is not available, actions are specified which will lead to safe shutdown without the system. The requirements of RG 1.97 concerning neutron monitoring are an enhancement to the existing system which would lead to the system being operable during accident scenarios for which it is not currently designed. However, delay in RG 1.97 modifications will not lead to an increase in the consequences of an accident as defined in the safety analysis due to the conservative EOP actions.

2. This change would not create the possibility of a new or different kind of accident from any accident previously evaluated because:

The current system has been evaluated and is currently accepted for interim operation. This change does not involve any changes to design or operation. In addition, the neutron monitoring system is not postulated as the initiator of any accidents. Therefore, no new or different accidents are created.

3. This change would involve a significant reduction in the margin of safety because:

Design, function, and operation of the existing neutron monitoring system remain the same. There is no specified "margin of safety" associated with this system as used in RG 1.97 other than to assure reactor shutdown following a transient or accident. EOP actions are conservative with respect to the use of neutron monitoring for verification that the rector is shutdown. When not available during an accident or transient scenario, actions are specified which will lead to reactor shutdown. Because these actions lead to a safe plant condition (reactor shutdown), the margin of safety is not reduced. In addition, this request does not result in a reduction to the margin of safety as defined in the bases of the River Bend Station (RBS) Technical Specifications.

The staff has reviewed the license's no significant hazards consideration determination and agrees with the analysis.

Local Public Document Room Location: Government Documents Department, Louisiana State University, Baton Rouge, Louisiana 70803

Attorney for licensee: Troy B. Conner, Jr., Esq., Conner and Wetterhahn, 1747 Pennsylvania Avenue, NW., Washington, DC 20006

NRC Project Director: Jose A. Calvo

Gulf States Utilities Company, Docket No. 50-458, River Bend Station, Unit 1 West Feliciana Parish, Louisiana

Date of amendment request: August 24, 1987.

Description of amendment request: The proposed amendment would revise Section 4.1.5, Standby Liquid Control System Surveillance Requirements of the Technical Specifications (TSs); delete Figures 3.1.5-1 and 3.1.5-2; modify the Bases B 3/4.1.5, Standby Liquid Control System; and change the TS Index to reflect the deletion of the two figures. These changes are being proposed because of proposed system modifications that are required to meet 10 CFR 50.62, Requirements for reduction of risk from anticipated transients without scram (ATWS) events for light-water-cooled nuclear power plants. The licensee submitted a report by letter dated July 31, 1987, that addresses compliance with this rule. The proposed amendment would modify the TSs as follows:

(1) TS 4.1.5 would be modified to delete the reference to the temperature limits of Figure 3.1.5-1 and substitute a temperature limit of greater than or equal to 45°F; delete the reference to the limits for available volume of sodium pentaborate solution of Figure 3.1.5-2 and instead reference the minimum volume which is to be determined by calculation; change the determination of available mass of sodium pentaborate to available mass of Boron-10 and limiting the sodium pentaborate concentration in solution to 9.5 weight percent; add requirements to determine the Boron-10 enrichment of the solution and to verify that the sodium pentaborate

concentration and Boron-10 enrichment meet the specified criterion; delete surveillance requirements related to precipitation of sodium pentaborate including heat tracing and tank heaters surveillance requirements; and add surveillance requirements to verify that the available weight of Boron-10, concentration of sodium pentaborate, and the solution volume are acceptable and to require the Boron-10 enrichment of the solution to be determined any time boron is added to the solution;

(2) Delete Figures 3.1.5-1 and 3.1.5-2;

(3) Modify the Bases B 3/4.1.5 to reflect the bases for the proposed TSs.

(4) Modify the TS Index to reflect the deletion of Tables 3.1.5-1 and 3.1.5-2.

Basis for proposed no significant hazards consideration determination: The Commission has provided standards for determining whether a significant hazards consideration exists as stated in 10 CFR 50.92(c). A proposed amendment to an operating license for a facility involves no significant hazards consideration if operation of the facility in accordance with the proposed amendment would not: (1) involve a significant increase in the probability or consequences of an accident previously evaluated; or (2) create the possibility of a new or different kind of accident from any accident previously evaluated; or (3) involve a significant reduction in a margin of safety. The licensee provided an analysis that addressed the above three standards in the amendment application.

1. No significant increase in the probability or the consequences of an accident previously evaluated results from this change because:

The increase in Standby Liquid Control (SLC) system control capacity via Boron-10 enrichment effectively increasing the Boron-10 injection rate does not alter the function of the system, method of operation, redundancy or system configuration. The system response time to an ATWS event has been reduced as the increased Boron-10 enrichment of the solution provides faster negative reactivity insertion thus reducing the consequences of the ATWS event.

The revised technical specifications ensure a level of system reliability comparable or superior to that of existing requirements as described in the following paragraphs.

Neutron absorber quantities are stated in terms of Boron-10 which is a consistent standard that will not vary regardless of degree of sodium pentaborate enrichment. The stated Boron-10 quantities are greater than or equal to the quantity of Boron-10 contained in the currently stated boron and sodium pentaborate quantities.

A minimum required net tank volume is determined for the actual analyzed enrichment and concentration of the solution which results in a single value for daily volume surveillance comparison. The single value is less subject to misinterpretation than obtaining the value from a graph as currently determined.

A single minimum solution temperature is specified which is based on the maximum solution saturation temperature with greater than a 5°F margin. This stated value is of equal conservatism to the current temperature versus concentration curve at the maximum allowable concentration and of greater conservatism at lower solution concentrations.

The neutron absorber remains in solution without solution heating or heat tracing by reducing the maximum precipitation temperature to 39°F which corresponds to the maximum allowable solution concentration. The current solution has a 21°F margin above precipitation temperature with heating. The enriched solution will have a 31°F margin without heating at the minimum observed-containment temperature.

Compliance with 10 CFR 50.62 is demonstrated by calculation, using analyzed concentration and enrichment values and by enrichment determination at the frequency for that parameter to change which is any time boron, in any form, is added to the solution.

As the revised technical specifications ensure comparable or superior system reliability, the consequences of previously evaluated accidents are not affected. The SLC system is also not postulated to initiate any accident scenarios; therefore, this change does not effect the probability of previously evaluated accidents.

2. This change would not create the possibility of a new or different kind of accident from any accident previously evaluated because:

No new plant configuration for operations result from this change. System redundancy has been maintained without requiring any system hardware modifications. Operation of the SLC system in accordance with the revised technical specifications does not adversely impact any previous accident analysis. Other safety related systems and the primary coolant system boundary are not adversely affected by Boron-10 enrichment of the sodium pentaborate solution or technical specification revision to reflect its use. Neither the SLC system nor this modification are postulated to initiate any accidents, as the system is used to mitigate the consequences of an accident by adding negative reactivity required to shutdown the reactor. The surveillance requirements ensure that the volume of sodium pentaborate solution available for injection and the concentration of sodium pentaborate in the solution would bring the reactor to cold, xenon-free shutdown plus additional margin for leakage and mixing following injection. The surveillance requirements also ensure high system reliability via equipment testing and solution temperature maintenance above the saturation level as stated in the specification bases. Thus, no new or different unevaluated accident is created.

3. This change would not involve a significant reduction in the margin of safety because:

The SLC system continues to provide backup capability to bring the reactor from full power to cold shutdown by the injection of Boron-10 in the form of a sodium pentaborate solution. The revised technical specification puts the cold shutdown requirements in terms of Boron-10, which is a constant value regardless of sodium pentaborate Boron-10 enrichment. The stated Boron-10 values are greater than or equal to the quantity of Boron-10 contained in the currently stated Boron and sodium pentaborate quantities. The use of enriched sodium pentaborate allows a decrease in solution concentration while maintaining the quantity of Boron-10 available for injection into the vessel. The concentration decrease reduces the saturation temperature such that the temperature margin at normal ambient containment temperatures is greater than the current margin with the solution heated to 80°F. The revised surveillance requirements demonstrate system operability by ensuring the solution contains the required quantity of Boron-10 in the deliverable volume of solution and by ensuring the mechanical components to deliver the solution to the vessel operate in a highly reliable manner. This ensures the SLC system will perform its function with the same level of reliability using the Boron-10 enriched sodium pentaborate solution. The plant's capability of responding to an ATWS events is also enhanced as the negative reactivity insertion rate is significantly increased resulting in a reduction of time required for reactor shutdown. Therefore, the proposed change is determined not to involve a reduction in the margin of safety as defined in the technical specification bases.

The staff has reviewed the licensee's no significant hazards consideration determination and agrees with the analysis.

Local Public Document Room Location: Government Documents Department, Louisiana State University, Baton Rouge, Louisiana 70803

Attorney for licensee: Troy B. Conner, Jr., Esq., Conner and Wetterhahn, 1747 Pennsylvania Avenue, NW., Washington, DC 20006

NRC Project Director: Jose A. Calvo

Indiana and Michigan Electric Company, Docket Nos. 50-315 and 50-316, Donald C. Cook Nuclear Plant, Unit Nos. 1 and 2, Berrien County, Michigan

Date of amendments request: July 22, 1987

Description of amendments request: The proposed amendments would change the Technical Specifications for functional tests of snubbers by allowing an extension in test frequency from 18 to 24 months with a corresponding increase in the test sample from 10 to 14% of the snubbers. The proposed amendments also correct an editorial oversight on visual inspections to include percent signs on the frequency span.

Basis for proposed no significant hazards consideration determination: The Commission has provided standards for determining whether a significant hazards consideration exists as stated in 10 CFR 50.92. A proposed amendment to an operating license for a facility involves no significant hazards consideration if operation of the facility in accordance with a proposed amendment would not (1) involve a significant increase in the probability or consequences of an accident previously evaluated, (2) create the possibility of a new or different kind of accident from any accident previously evaluated, or (3) involve a significant reduction in a margin of safety. The proposal by the licensee to increase the frequency and the number of snubbers to be tested from 18 months and 10% of the snubbers to 24 months and 14% of the snubbers is based on calculations to ensure that the confidence in snubber operability is maintained. If the confidence in operability remains unchanged, there should be no significant increase in the probabilities or consequences of any accident previously analyzed. Since there is no change to operations or modifications to the plant involved in the proposed change, there is no possibility of a new or different kind of accident from any previously evaluated. The confidence in operability does not change, therefore there is no significant reduction in a margin of safety.

The Commission has provided guidance concerning the determination of significant hazards by providing certain examples (51 FR 7751) of amendments considered not likely to involve a significant hazards determination. The first example, (i), is a purely administrative change to technical specifications. The editorial change to replace percent signs is directly related to this example.

Based on the above considerations, the staff proposes to determine that the licensee's request involves no significant hazards considerations.

Local Public Document Room location: Maude Preston Palenske Memorial Library, 500 Market Street, St. Joseph, Michigan 49085.

Attorney for licensee: Gerald Charnoff, Esq., Shaw, Pittman, Potts and Trowbridge, 2300 N Street, NW., Washington, DC 20037.

NRC Project Director: David L. Wigginton, Acting.

Louisiana Power and Light Company, Docket No. 50-382, Waterford Steam Electric Station, Unit 3, St. Charles Parish, Louisiana

Date of amendment request: July 24, 1987.

Description of amendment request: Waterford 3 License Condition 2.C.14 requires testing to confirm the presence of Boraflex in the spent fuel storage racks and places limitations on fuel assembly locations in the fuel handling building (FHB). The proposed change will eliminate the Boraflex testing requirement and expand the approved fuel assembly locations in the FHB.

The requirement to confirm the presence of Boraflex in the spent fuel storage racks was a one-time-only requirement to be completed prior to startup following the first refueling outage for Waterford 3. The confirmatory testing was conducted during March 1985 and the results were provided to the NRC via W3P86-1495, dated June 6, 1986. By letter dated June 23, 1986 the NRC indicated that the Boraflex testing requirements had been satisfactorily completed in compliance with the License Condition. The proposed change, therefore, deletes the portion of the License Condition associated with Boraflex testing and retitles the License Condition, consistent with its new purpose.

With regard to fuel assembly movement, License Condition 2.C.14 states:

> No more than one fuel assembly shall be outside an approved shipping container, storage rack or fuel transfer tube in the fuel handling building at any time.

This portion of the License Condition was intended to support the exemption to 10 CFR 70.24 granted to Waterford 3 which, absent the exemption, would have required criticality monitors in the FHB. By placing restrictions on the location of fuel assemblies and the number of fuel assemblies that may be moved at any one time, the License Condition effectively minimizes the potential for two or more assemblies to come to rest, outside of analyzed locations, sufficiently close to each other to raise criticality concerns. The proposed change will revise the License Condition to take credit for additional approved fuel assembly locations and clarify the applicability of the License Condition during refueling operations, while continuing to minimize the potential for a critical configuration.

Refueling Operations: During refueling, spent fuel is transferred from the reactor containment building (RCB) to the FHB through the fuel transfer tube. The spent fuel handling machine (SFHM) receives the spent fuel from the upender at the north end of the fuel transfer tube. The spent fuel is then carried by the SFHM through the refueling transfer canal and the spent fuel cask storage area to its location in the spent fuel pool. Fresh fuel, stored in the spent fuel pool, follows the opposite path to the fuel transfer machine upender for transport to the RCB.

Although not the present practice, fresh fuel may be stored in the new fuel vault. In this case, refueling would involve the FHB crane lifting an assembly from the new fuel vault and placing it in the fuel elevator at the north end of the refueling transfer canal, to be picked up by the SFHM and transferred to the upender.

Technical Specification 3.9.1, Refueling Operations - Boron Concentration, requires that the reactor coolant system and refueling canal (and, therefore, the spent fuel pool and connected water areas) be borated sufficiently to ensure k_{eff} less than or equal to 0.95 or a boron concentration greater than or equal to 1720 ppm, whichever is the more restrictive reactivity condition. Fuel assembly movements during refueling are carried out entirely underwater in water systems covered by Technical Specification 3.9.1, with the exception of transferring fresh fuel from the new fuel vault to the fuel elevator. The boration requirements of Technical Specification 3.9.1, therefore, ensure that no criticality concerns will arise during underwater operations in refueling.

Similarly, the potential for criticality during the movement of fresh fuel from

the new fuel vault to the fuel elevator is negligible. In order to approach a critical configuration, two or more fresh fuel assemblies must be removed from the new fresh vault, placed in close proximity to each other and be submerged under unborated water. The only available location to place fresh fuel assemblies in close proximity in the FHB is the deck area surrounding the water pools. Although such an occurrence is highly improbable, an unborated water source is still necessary for criticality. In the FHB, unborated water is available from four sources - three 1½ inch fire hose lines and one 1 inch eyewash supply line. The FHB deck consists of a number of hatch covers, none of which are water-tight, over an open area below. The vertical distance from the floor below to the FHB deck is approximately 81 feet. A water source with a flow rate and capacity clearly in excess of that available in the FHB would be necessary to raise the FHB water level above the FHB deck. As a result, a critical configuration due to removing fresh fuel from the new fuel vault during refueling is not a credible event.

Based on the above, sufficient means exist to safeguard against critical configurations in the FHB during refueling. Additional limitations on fuel movement, in the form of a License Condition, do not provide additional criticality protection nor will the lack of such additional limitations invalidate the basis for the existing exemption to 10 CFR 70.24 during refueling.

Non-Refueling Operations: Fuel movement in the FHB outside of Mode 6 largely involves the storage of fresh fuel during new fuel receipt. During new fuel receipt the hatch covers in the north central portion of the FHB deck are removed. The FHB crane is used to lift the fuel assembly shipping container from the truck bed below, through the hatch area. The shipping containers are placed on the FHB deck either to the west (preferred) or east of the hatch. In these areas the fuel assemblies are inspected and transferred, by the FHB crane, to the fuel elevator at the north end of the refueling transfer canal. The SFHM retrieves the assembly from the fuel elevator and, passing through the refueling transfer canal and the spent fuel cask storage area, places the new fuel assembly in the spent fuel storage racks. In the future, the new fuel assemblies may be transferred to the new fuel vault by the FHB crane, however, the present practice is to store new fuel in the spent fuel storage pool due to the number of new assemblies required each reload.

Outside of Mode 6, Technical Specification 3.9.1 does not require boration of the spent fuel storage pool. Although it is Waterford 3's practice to continue to meet the same boration levels in Modes 1-5, with weekly surveillance, the following discussion does not credit that boration.

In order to preserve the exemption to 10 CFR 70.24, while providing additional operational flexibility, the proposed change to License Condition 2.C.14 places physical restrictions on the location of fuel assemblies. These restrictions provide the same level of protection against a critical configuration as is provided under the existing License Condition.

The proposed change designates certain locations/equipment as acceptable for residence of a fuel assembly, including an approved shipping container, an approved storage rack, the fuel transfer tube (including upender), the fuel elevator and the SFHM. In addition, a single fuel assembly is allowed outside of these locations/equipment. (In practice, the single fuel assembly will, most often, be suspended from the FHB crane while in transit to a new location.)

Of the approved locations/equipment, all are fixed and widely separated with the exception of the SFHM. It is clear that no critical configuration could occur due to assemblies at the fixed locations.

In order to maintain the safety margin to criticality which exists under the present License Condition, it is necessary to examine the locations where the fuel assembly transport equipment (FHB crane and SFHM) could place assemblies in close proximity to those assemblies in approved locations. From this viewpoint, two locations of concern can be identified: (1) the north end of the refueling transfer canal where the FHB crane and SFHM (both carrying a fuel assembly) could converge on the fuel elevator, which could also contain a fuel assembly; and (2) the spent fuel storage pool where the FHB crane, carrying a fuel assembly from the east new fuel laydown area, could approach the SFHM, also carrying an assembly, in the spent fuel pool. In both cases, it would be necessary to postulate the drop of at least one fuel assembly to approach a critical configuration.

For the first case, at the fuel elevator, the combination of a mechanical restriction on the lifting height of the FHB crane and a criticality analysis ensure that no critical configuration may occur. In order to approach a critical configuration of two fuel assemblies carried by the FHB crane and SFHM, it is necessary for the FHB crane to drop an assembly from directly above the FHM in such a way as to strike and dislodge the assembly carried by the SFHM. Both assemblies must then come to rest in length-wise contact. The FHB crane hook maximum high point, however, is such that, when carrying a fuel assembly, the lower end of the fuel assembly is only approximately three feet above the FHB deck. This is not sufficient height to clear the bridge of the SFHM. The FHB crane, therefore, could not maneuver a fuel assembly directly over the SFHM. With this physical restriction, however, the FHB crane or SFHM may still approach the fuel transfer canal with an assembly while an assembly rests in the fuel elevator. For this case, Waterford 3 has performed a criticality analysis postulating that the assembly in transit drops in such a way as to rest vertically at the closest point of approach to the assembly in the fuel elevator. This analysis is similar to those conducted for other assembly drops as discussed in the FSAR. Due to the cage structure around the fuel elevator assembly and the associated angle iron offsets, the limiting configuration of the two assemblies results in a k_{eff} no greater than 0.95.

For the second case of concern - the approach of the FHB crane and the SFHM in the vicinity of the spent fuel pool - the same physical restriction as in the first case would prevent the FHB crane from lifting an assembly sufficiently high to clear the bridge of the SFHM. Additional restrictions also apply in this case. Presently, a railing runs the length of the spent fuel pool northern edge for a step-off pad where personnel access is administratively controlled. As with the SFHM bridge, the FHB crane is not capable of clearing the railing while carrying a fuel assembly. In addition, the current practice of Waterford 3 is to store spent fuel in the rack locations along the northern portion of the spent fuel pool, and to store new fuel in the racks along the southern edge. When the SFHM is carrying a fuel assembly in the northern half of the spent fuel pool (i.e. closer to the FHB crane path) it is likely to be a spent fuel assembly to be placed in the racks during refueling, and thus the spent fuel pool is subject to the boration requirements of Technical Specification 3.9.1. Outside of Mode 6, the SFHM will be moving new fuel into the south end of the spent fuel pool, i.e. widely separated from the FHB crane.

Finally, for both cases, it is the practice of Waterford 3 to assign at least one person to walk with new fuel assemblies as they are being

transported by the FHB crane from their laydown/inspection area to the fuel elevator. In the unlikely case that the FHB crane operator should approach either the SFHM or the northern edge of the spent fuel pool, the individual accompanying the fuel assembly will provide adequate warning to the crane operator.

During non-refueling operations, therefore, the proposed License Condition will provide the same level of protection against criticality events as the existing License Condition, while affording Waterford 3 increased flexibility in fuel movement. In addition, the proposed License Condition will preserve the assumptions underlying the exemption to 10 CFR 70.24.

Fuel Inspection/Reconstitution: To this point, Waterford 3 has not conducted spent fuel inspection or reconstitution. It is anticipated that any needed inspection/reconstitution activities would be largely conducted at approved storage rack locations. However, based on industry experience, it may be necessary to utilize temporary inspection/reconstitution locations and equipment. The proposed License Condition addresses this possibility by ensuring that the inspection/reconstitution area is borated to at least 1720 ppm, equivalent to the criticality protection afforded during Mode 6.

Basis for proposed no significant hazards consideration determination: The NRC staff proposes that the proposed change does not involve a significant hazards consideration because, as required by the criteria of 10 CFR 50.92(c), operation of the facility in accordance with the proposed amendment would not: (1) Involve a significant increase in the probability or consequences of an accident previously evaluated; or (2) Create the possibility of a new or different kind of accident from any accident previously evaluated; or (3) Involve a significant reduction in the margin of safety. The basis for this proposed finding is given below.

(1) As discussed above, the proposed change will maintain the same level of protection against criticality events as that afforded under the existing License Condition. For refueling or inspection/reconstitution operations, this protection is ensured through the boration requirements of Technical Specification 3.9.1 or its equivalent. During non-refueling operations separation of approved locations combined with physical restrictions on fuel movement and analysis results ensure that fuel assemblies may not be placed in a critical configuration. Therefore, the proposed change will not increase the probability or consequences of an accident previously evaluated.

(2) The safety approach taken by the current License condition and Technical Specification 3.9.1 is to provide sufficient physical and other controls on fuel handling to ensure that a critical configuration cannot occur. The proposed License Condition preserves the same concepts of physical separation and boration while increasing the number of approved fuel assembly locations. The possibility of a criticality event has, therefore, not been increased by the proposed License Condition nor has the possibility of another unevaluated event been raised.

(3) The proposed change maintains the margin of safety afforded by the existing License Condition by utilizing boration requirements, physical limitations and analysis to ensure that the potential for critical configurations is minimized. Therefore, operation of the facility in accordance with the proposed change will not involve a reduction in the margin of safety.

The staff has reviewed the licensee's no significant hazards consideration analysis. Based on the review and above discussions the staff proposes to determine that the proposed change does not involve a significant hazards consideration.

Local Public Document Room location: University of New Orleans Library, Louisiana Collection, Lakefront, New Orleans, Louisiana 70122

Attorney for licensee: Bruce W. Churchill, Esq., Shaw, Pittman, Potts and Trowbridge, 2300 N Street, NW., Washington, DC 20037

NRC Project Director: Jose A. Calvo

Mississippi Power & Light Company, System Energy Resources, Inc., South Mississippi Electric Power Association, Docket No. 50-416, Grand Gulf Nuclear Station, Unit 1, Claiborne County, Mississippi

Date of amendment request: October 17, 1986 and August 6, 1987

Description of amendment request: The October 17, 1986 application for license amendment requested four changes to the Technical Specifications (TSs). Three of the changes were made in Amendment 29 to the operating license, issued March 31, 1987. The fourth requested change, the addition of TSs for smoke detectors in the control rod drive repair room, is addressed in this notice together with the proposed addition of TSs for smoke detectors in other areas requested in the August 6, 1987 application.

This amendment would change the TSs (Appendix A to the operating license) in eight areas: (1) a clarification to the definition of secondary containment integrity; (2) a change in the name of a supporting organization represented on the Safety Review Committee; (3) a nomenclature change for a secondary containment isolation valve; (4) deletion of the manual initiation handswitch calibration requirement for ECCS pumps; (5) deletion of expired footnotes; (6) a change to reflect new upper containment pool gates; (7) a change to add certain smoke detectors; and (8) a modification to the setpoint for residual heat removal (RHR)/reactor core isolation cooling (RCIC) steam line high flow.

The amendment would also change the Environmental Protection Plan (Appendix B to the operating license) by increasing from 2 years to 5 years the time for keeping records of erosion problems and the corrective measures taken.

Basis for proposed no significant hazards consideration determination: The Commission has provided standards for determining whether a significant hazards consideration exists as stated in 10 CFR 50.92. A proposed amendment to an operating license for a facility involves no significant hazards considerations if operation of the facility in accordance with a proposed amendment would not: (1) involve a significant increase in the probability or consequences of an accident previously evaluated; or (2) create the possibility of a new or different kind of accident from any accident previously evaluated; or (3) involve a significant reduction in a margin of safety.

The licensee, System Energy Resources, Inc. (SERI), has provided an analysis of significant hazards considerations in its request for a license amendment. The licensee has concluded, with appropriate bases, that the proposed amendment involves no significant hazards considerations because it meets the three standards in 10 CFR 50.92.

The Commission has also provided guidance concerning the application of these standards by providing examples of amendments considered likely, and not likely, to involve a significant hazards consideration. These examples were published in the **Federal Register** on March 6, 1986 (51 FR 7744). The NRC staff has made a preliminary review of the licensee's submittal. A discussion of these examples as they relate to the proposed amendment follows.

One of the examples of actions involving no significant hazards consideration, example (i), involves a purely administrative change: for example, a change to achieve

consistency, correction of an error, or a change in nomenclature. Proposed TSs changes (1) through (5), as discussed above, and the change to the Environmental Protection Plan (EPP) are similar to example (i). Change (1) would change the phrase "operable pursuant to Specification 3.6.6.3" in the definition of secondary containment integrity to "in compliance with the requirements of specification 3.6.6.3." The change would eliminate the interpretation that both standby gas treatment subsystems specified in TS 3.6.6.3 must be operable for secondary containment integrity to exist and allows use of the action statements in TS 3.6.6.3 if one or both subsystems are inoperable. This change would make the definition of secondary containment integrity consistent with other definitions in the TSs. Change (2) would change the name of the organizational affiliation of a member of the Safety Review Committee in TS 6.5.2.2 from Middle South Services, Inc. to the new name, MSU System Services, Inc. Change (3) would correct an error in the listing of TS Table 3.6.6.2-1, wherein a secondary containment isolation valve in the makeup water treatment system is designated as having only one solenoid-operated pilot valve, instead of two as actually installed. Change (4) would correct an error in TS Table 4.3.3.1-1, Items A.1.d and B.1.d, wherein quarterly calibration of manual initiation handswitches is required. Since these handswitches do not have components that can be calibrated, the notation under channel calibration would be changed from "Q" (quarterly) to "NA" (not applicable). This change would achieve consistency with other manual initiation handswitches in the TSs. Change (5) would delete temporary TS footnotes which were effective from October 3, 1986 through October 10, 1986 in order to enhance the readability of the TSs for the operators. The change to the Environmental Protection Plan (EPP), which would increase the time from 2 years to 5 years for keeping records of erosion problems and the corrective actions taken, achieves consistency within the EPP.

The licensee's analysis of the remaining three proposed changes is reproduced below.

[Change 6 Wier Wall Gates in the Upper Containment Pool]

The proposed technical specification change is the result of a design change to increase the height of the upper containment pool weir wall 18 inches across the full width of the pool. This weir wall separates the reactor cavity and the moisture separator storage area. The modification which is scheduled to be performed is an ALARA radiation enhancement to provide complete submergence of the separator when in its stored position in the pool with the reactor cavity drained. The new weir wall will include two removable gates that are required to be in a stored position or otherwise removed from the upper containment pools during Operational Conditions 1, 2, [and] 3 to ensure that the suppression pool makeup capability is not affected.

Current Technical Specifications 3/4.5.2, 3/4.5.3, and 3/4.6.3.4 specify the required positions of existing upper containment pool gates and the spent fuel pool gate. With the addition of the two new weir wall gates[,] the subject technical specifications should be revised to clarify the distinctions of the new and existing gates and their proper positions. Technical Specifications 3/4.5.2 and 3/4.5.3 require revision to indicate that the upper containment fuel pool gates currently referenced in the footnote are actually the reactor cavity gate and the transfer canal gate. Technical Specification 3/4.6.3.4 will require revision to indicate that all the upper containment pool gates, including the two weir wall gates, be in their stored position or removed from the upper containment pool during Operational Conditions 1, 2, and 3 to ensure that suppression pool make up capability is not affected. In addition, the requirement in the footnote of Technical Specification 3/4.5.2 to have the spent fuel pool gate removed is being deleted because the spent fuel pool and upper containment pool do not need to be in communication when declaring the ECCS inoperable.

SERI has evaluated the proposed changes and considers them not to involve a significant hazards consideration for the following reasons:

(1) The proposed changes do not involve a significant increase in the probability or consequences of an accident previously evaluated because the changes will indicate the proper positions of the reactor cavity and transfer canal gates while in refueling with the ECCS or Suppression Pool inoperable and of all upper containment pool gates during Operational Conditions 1, 2 and 3. The changes will provide for the needed additional water coverage of the moisture separator during storage while continuing to ensure adequate suppression pool makeup capability during normal operation. Also, the installation of the added weir wall gates during refueling with the upper containment pool water level at a minimum of 22 feet 8 inches above the reactor vessel flange will still provide adequate heat removal capability with ECCS and Suppression Pool systems out of service. The requirement for the spent fuel gate to be removed prior to declaring ECCS inoperable has been deleted based on a review performed by General Electric. The volume of water in the upper containment pool is not required to be in communication with the spent fuel pool when declaring ECCS inoperable. This position is consistent with the Technical Specifications of three other domestic BWR/6 MARK III plants surveyed by General Electric.

(2) The proposed changes do not create the possibility of a new or different kind of accident from any accident previously evaluated because the changes will provide clarification to the ECCS operability footnote of Technical Specification 3.5.2 and the Suppression Pool operability footnote of 3.5.3 without affecting the design bases and will identify the proper positions of all upper containment pool gates in Technical Specification Surveillance Requirement 4.6.3.4.b in order to ensure the operability of the suppression pool makeup system.

(3) The proposed changes do not involve a significant reduction in [a] margin of safety because the changes will properly indicate the positions of the reactor cavity, transfer canal, and weir wall gates during refueling and normal operation.

[Change (7) Heat and Smoke Detectors] he proposed changes to [Technical Specification Table 3.3.7.9-1, "Fire Detection Instrumentation"] involve the addition of Function A (early warning fire detection and notification only) smoke detectors and Function B (actuate fire suppression systems and provide early warning and notification) heat detectors in order to enhance the existing fire detection capabilities of the fire detection system. The actual changes to the system by fire zone are as follows:

Fire Zone	Description	Heat Detectors Added	Smoke Detectors Added
OC202	Fire Area 31 - Control Building Division I Switchgear Area, Elevation 111' - 0".	7	6
OC215	Fire Area 38 - Control Building Division II Switchgear Area, Elevation 111' - 0".	0	3
OC402	Fire Area 42 - Control Building Lower Cable Spreading Room, Elevation 148' - 0".	2	0
1A101	Fire Area 1 - Auxiliary Building Passage, Elevation 93' - 0" and 103' - 0".	0	1
1A117	Fire Area 1 - Auxiliary Building Corridor and Miscellaneous Equipment Area, Elevation 93' - 0" 103' - 0".	0	1
1A222	Fire Area 6 - Auxiliary Building Motor Control Center Area, Elevation 119' - 0".	0	5
1A301	Fire Area 11 - Auxiliary Building Corridor, Elevation 139' - 0".	0	1
1A321	Fire Area 11 - Auxiliary Building Motor Control Center, Elevation 139' - 0".	0	1
1A322	Fire Area 11 - Auxiliary Building Centrifugal Chiller Area, Elevation 139' - 0".	0	1
1A401	Fire Area 19 - Auxiliary Building Passage, Elevation 166' - 0".	0	1
1A417	Fire Area 19 - Auxiliary Building Miscellaneous Equipment Area, Elevation 166' - 0".	0	1
1A428	Fire Area 19 - Auxiliary Building Passage, Elevation 166' - 0".	0	4
[1A430	Fire Area 19 - Control Rod Drive Repair Room, Elevation 166' - 0".]	0	3*

*Requested in the October 17, 1986 application

The 1984 Triennial Fire Protection Audit of Grand Gulf Nuclear Station, Unit 1 identified a finding related to the location of ionization[-]type smoke detectors and thermal heat detectors and the adherence to the requirements of NFPA 72D-1975. NFPA 72D-1975 states that automatic fire detectors shall be located in accordance with NFPA 72E. Specifically identified was that fire detection equipment in some areas was not mounted on the ceiling and not spaced adequately in beam pockets. As a result of this finding, SERI conducted a detailed fire protection evaluation to determine the adequacy of the existing configuration and if found necessary determine where relocation and/or addition of detectors are required to meet SERI's commitment to meet the functional requirements of NFPA 72D-1975. UFSAR Table 9.5-11, Section E.1.a describes SERI's commitment to meet the functional requirements of NFPA 72D. SERI defines the functional requirements to be those requirements delineated in NFPA 72D pertaining to the performance of initiating device circuits, signaling line circuits and indicating device circuits as well as power supply sources, overcurrent protection, audible signal appliances, signal capacity of circuits and electrical supervision.

The evaluation was conducted by qualified fire protection engineers and was based on the license commitments described in the Updated Final Safety Analysis Report, the requirements of NFPA 72E (1978), the manufacturer's installation instructions, the fire hazards analysis and the GGNS combustible heat load calculation. In all cases, the as-installed configuration, although not necessarily in strict conformance with the installation requirements of NFPA 72E, was determined to meet the license commitments as required by Operating License Condition 2.C(23).

The primary function of the fire detection systems is to provide early warning of a fire and/or to actuate the appropriate suppression system such that safe shutdown of the plant is not inhibited. In some cases, improvements in the existing configuration were recommended in order to enhance the early warning capability of the fire detection system. The recommended improvements were in zones which contained redundant safe shutdown equipment separated by less than 50 feet horizontally and not separated by 3-hour fire barriers. The detection systems located in those zones are to be enhanced as necessary to meet the strict location requirements of NFPA 72E (referenced by NFPA 72D). The proposed enhancements will include relocation of some detectors within their respective zones but changes to the technical specification are not required for those zones.

The proposed enhancements described above will assure that the detectors installed in those zones will be in compliance with the location requirements of NFPA 72E (1978). Detectors installed in the remaining zones have been determined through the fire protection evaluation to be adequate to perform their required function and no changes are proposed for those zones.

SERI has evaluated the proposed changes [in the August 6, 1987 application] and considers them not to involve a significant hazards consideration for the following reasons:

(1) The proposed changes will not significantly increase the probability or consequences of an accident previously evaluated, because the changes are enhancements to the fire detection capability of the fire protection system described in the fire hazards analysis. The proposed changes will not increase the probability of a fire but will help to mitigate the consequences of a fire by enhancing the early warning capability of the fire detection system. Specific areas of improvement are in pockets around structural beams.

(2) The proposed changes will not create the possibility of a new or different accident from any accident previously evaluated because the system design bases and function are not being changed. Fire detection systems are not the precursors for any analyzed accident and do not created the possibility of a new or different accident. The proposed changes represent improvements to the operation or design for the presently installed fire detection systems.

(3) The proposed change will not involve a significant reduction in [a] margin of safety. The proposed changes will increase the sensitivity of the existing fire detection system and as such will increase the ability to detect and/or suppress fires in the zones affected. The proposed change does not delete fire detection from any fire zone

nor will it affect any other safety[-related systems or equipment in the plant.

[For similar reasons, SERI considers the addition of smoke detectors as proposed in its October 17, 1986 application not to involve a significant hazards consideration.]

[Change (8) Setpoint for RHR/RCIC Steam Line High Flow (TS Table 3.3.2-2 Item 5k)]

The Residual Heat Removal (RHR)/Reactor Core Isolation Cooling (RCIC) steam line high flow trip setpoint and allowable value are changed to be less than or equal to 37 inches H_2O and 43 inches H_2O, respectively.

Upon review of the RHR/RCIC steam line high flow setpoint, due to a concern at another BWR/6 plant, it was determined that a correction must be made to the originally specified setpoint and allowable value. The affected instruments sense the differential pressure across two separate elbows in the common RHR/RCIC steam supply line that branches off of main steam line A. This RHR/RCIC line is used to supply steam to the RCIC turbine and can also supply steam to the RHR heat exchangers when the plant is in the RHR steam condensing mode (currently prohibited by a license commitment). The instruments provide isolation signals to the RHR/RCIC steam supply and RCIC pump suction isolation valves (valve group 4) when a leak or break in the steam supply line is sensed as indicated by abnormally high steam flow.

The present Technical Specification setpoint is nonconservative for two reasons. The first reason is the use of the incorrect flow for the RHR system in the steam condensing mode. The second reason is the incorrect use of a formula for finding the differential pressure in an elbow tap which is empirically derived for use only in RCIC turbine steam flow applications. The combination of these two errors results in the current trip setpoint being too high.

The proposed trip setpoint and allowable value are based on an analytic limit of 125% of rated (100%) flow to RHR loops A and B in the steam condensing mode (207.8×10^3 lb/hr) and to the RCIC turbine (38.85×10^3 lb/hr). By applying the correct RHR flow and the appropriate formula for differential pressure in an elbow tap, the new trip setpoint and allowable value are less than or equal to 37 inches H_2O and 43 inches H_2O, respectively.

[SERI has evaluated proposed change (8) and considers it not to involve a significant hazards consideration for the following reasons:]

(1) The proposed change does not involve a significant increase in the probability or consequences of an accident previously evaluated. The proposed change does not alter the precursors of any previously evaluated accident and therefore no increase in the probability of a previously evaluated accident is involved. The consequences of previously evaluated accidents do not increase since the proposed change is in the conservative direction and will provide earlier steam line isolation if a break or leak were to occur.

(2) The proposed change does not create the possibility of a new or different kind of accident from any previously analyzed. The revised setpoint enhances the mitigative measures used to isolate the RCIC/RHR steam line if a break were to occur and lowers an already existing instrument setpoint. Lowering this setpoint will cause an isolation signal to be generated sooner if a leak or break is detected. Therefore, there is no possibility of a new or different kind of accident from any previously analyzed.

(3) The proposed change does not involve a significant reduction in a margin of safety. The existing margin of safety to detect a leak is not reduced by the proposed reduction of the current instrument setpoint in the conservative direction since the system will now isolate at a lower flow. The proposed change reflects a revision in the setpoint computational model to correctly reflect the design information for the as-built plant. Based on the above, the proposed change results in the margin of safety being increased.

The NRC staff has made a preliminary review of the licensee's analyses of proposed changes (6), (7) and (8) and agrees with the licensee's conclusions that the three standards in 10 CFR 50.92 are met for these proposed changes.

Based on the similarity of the proposed TSs changes (1) through (5) and the proposed EPP change to example (i) in 51 FR 7744, and the staff's preliminary review of the licensee's analyses of the proposed TSs changes (6), (7) and (8), the Commission proposes to determine that the requested operating license amendment does not involve a significant hazards consideration.

Local Public Document Room location: Hinds Junior College, McLendon Library, Raymond, Mississippi 39154

Attorney for licensee: Nicholas S. Reynolds, Esquire, Bishop, Liberman, Cook, Purcell and Reynolds, 1200 17th Street, NW., Washington, DC 20036

NRC Project Director: Herbert N. Berkow

Niagara Mohawk Power Corporation, Docket No. 50-220, Nine Mile Point Nuclear Station, Unit No. 1, Oswego County, New York

Date of amendment request: February 17, 1987

Description of amendment request: The proposed amendment would revise the Unit 1 Technical Specifications in several related areas.

Section 3.6.2a(8) (page 190), Table 3.6.2h (page 224), and Table 4.6.2h (page 225) would be revised to omit reference to Off-gas Isolation. Off-gas monitor surveillance would be covered under Section 3.6.14b and Table 4.6.14-2. The reference to Specification 3.6.1 would be removed because it provides no further action.

Note (h) of Table 3.6.14-1 (page 241mm) would be removed because it does not apply to Radioactive Liquid Effluent Monitoring Instrumentation.

Table 3.6.14-2 (page 241qq) would be revised to more closely resemble Standard Radiological Effluent Technical Specifications. The footnotes * and ** would be corrected to reflect gaseous rather than liquid applicability limits.

A recent NRC inspection (Inspection Report Number 50-220/86-03) revealed a concern in regard to Technical Specification LCO 3.6.14b and Table 3.6.14-2. Technical Specification LCO 3.6.14.b, Gaseous Process and Effluent, requires, in part, that a minimum of one operable channel is required to monitor the release of iodine and particulates via the Radioactive Gaseous Process (stack gas) system. With less than the minimum number of operable monitoring channels, Technical Specification Table 3.6.14-2 allows continued stack gas release of iodine and particulates provided that samples are continuously collected with auxiliary equipment. While the Technical Specifications require the operation of auxiliary equipment, they do not allow adequate time for the system to be placed into operation.

A change to Technical Specification Table 3.6.14-2 (pages 241qq and 241rr) is required to clarify this issue. The proposed change recognizes the necessary delay in connecting the auxiliary equipment, is primarily an administrative change, and is consistent with the interval provided in the Technical Specifications for Nine Mile Point Unit 2. Although the stack gas monitoring system isolates the containment vent and purge valves, it is a non-safety-related isolation signal. The containment vent and purge valves are normally closed during operation and are opened only for inerting and de-inerting and for short intervals to adjust containment pressure due to changes in atmospheric pressure. These valves receive safety-related containment isolation signals of low low water level and high containment pressure which would automatically close them.

Basis for proposed no significant hazards consideration determination: The Commission has provided standards for determining whether a significant hazards consideration exists as stated in 10 CFR 50.92(c).

The licensee has presented its determination of no significant hazards consideration as follows:

1. The operation of Nine Mile Point Unit 1 in accordance with the proposed amendment will not involve a significant increase in the probability or consequences of an accident previously evaluated.

None of the editorial changes proposed affects the probability or consequences of an accident. There is no reduction in surveillance requirements. The proposed changes merely provide clarification. Allowing the normal stack gas monitoring system to be inoperable will not increase the probability or consequences of an accident. The stack gas monitor provides information to the operators regarding radioactive releases, but does not affect the consequences or the probability of an accident. Although the containment vent and purge valves would not isolate on high radiation while the stack gas monitors are out of service, this would not increase the consequences or probability of an accident since the containment vent and purge valves would automatically isolate upon receipt of a containment isolation signal. Therefore, the proposed changes will not increase the probability or the consequences of an accident previously evaluated.

2. The operation of Nine Mile Point Unit 1 in accordance with the proposed amendment will not create the possibility of a new or different kind of accident from any accident previously evaluated.

The proposed amendment makes administrative changes and does not involve the modification of existing equipment or addition of new equipment. Therefore, the proposed changes will not create the possibility of a new or different kind of accident from any accident previously evaluated.

3. The operation of Nine Mile Point Unit 1 in accordance with the proposed amendment will not involve a significant reduction in a margin of safety.

The proposed changes are administrative and editorial in nature and, therefore, do not affect any margin of safety. In addition, allowing the stack gas monitoring system to be out of service for eight hours before placing auxiliary equipment in operation is consistent with the Technical Specifications for Nine Mile Point Unit 2. It is justified based on the existence of other indicators to alert the operators to adverse conditions, such as the ejector off-gas monitor, reactor building ventilation monitor, main steam line radiation monitors and containment atmosphere monitoring systems. Therefore, the proposed changes do not involve a significant reduction in a margin of safety.

The staff has reviewed the licensee's no significant hazards consideration determination and agrees with the licensee's analysis. Therefore, the staff proposes to determine that the application for amendment involves no significant hazards consideration.

Local Public Document Room location: State University of New York, Penfield Library, Reference and Documents Department, Oswego, New York 13126.

Attorney for licensee: Troy B. Conner, Jr., Esquire, Conner & Wetterhahn, Suite 1050, 1747 Pennsylvania Avenue, NW., Washington, DC 20006.

NRC Project Director: Robert A. Capra, Acting Director

Northeast Nuclear Energy Company, et al., Docket No. 50-336, Millstone Nuclear Power Station, Unit No. 2, New London County, Connecticut

Date of amendment request: July 14, 1987 (partial response) and September 4, 1987

Description of amendment request: By application for license amendment dated July 14, 1987 and September 4, 1987, Northeast Nuclear Energy Company, et al. (the licensee), requested changes to the Technical Specifications (TS) for Millstone Unit 2 as follows: (1) TS 4.4.5.1.4, "Acceptance Criteria", would be modified to address the wall thinning criteria for steam generator sleeves and to remove a footnote and (2) TS 3.4.6.2, "Reactor Coolant System Leakage", would be changed to decrease the allowable primary-to-secondary leakage (through any one steam generator) from 0.5 to 0.15 gpm.

Basis for proposed no significant hazards consideration determination: On December 30, 1983, the NRC staff issued Amendment 89 to the Millstone Unit 2 Operating License, DPR-65. Amendment 89 permitted the licensee to repair degraded steam generator tubes by inserting thin wall tubes (sleeves) in the existing steam generator tubes. In the safety evaluation for Amendment 89, the NRC staff expressed the need for the licensee to develop criteria to address potential degradation of sleeved steam generator tubes. This need was subsequently reflected in a footnote to TS 4.4.5.1.4 as follows: "The plugging limit for sleeves will be determined prior to next refueling outage." Subsequently, on May 25, 1984, the licensee submitted a letter which proposed that sleeved steam generator tubes, degraded forty percent (40%) through wall, should be plugged. By letter dated January 28, 1985, the NRC responded by approving the licensee's plugging criteria for sleeved steam generator tubes. The proposed changes to TS 4.4.5.1.4 would delete the existing footnote and incorporate the plugging criteria for sleeved steam generator tubes in the TS by changing the definitions of imperfection, degradation, degraded

tube, % degradation, and plugging limit, as they appear in TS 4.4.5.1.4.

The second proposed change to the TS involves the limit for primary-to-secondary leakage through a single steam generator. At the present time, TS 3.4.6.2 limits the primary-to-secondary leakage, in a single steam generator, to 0.5 gpm. The proposed change to TS 3.4.6.2, which would decrease the allowed leakage from 0.5 to 0.15 gpm, resulted from the licensee's January 1987 shutdown of Millstone Unit 2 for high primary-to-secondary leakage. Following the plant shutdown, the licensee identified a steam generator tube with a circumferential crack which was through-wall over at least a portion of the 220° circumferential extent.

Assessments of the safety significance of the leaking tube were performed and concluded that operation of the steam generator continued to be safe provided that structural limits could be met for a circumferentially oriented crack. Based on calculations which concluded that a circumferential crack of the size which would allow 0.15 gpm primary-to-secondary leakage was structurally acceptable, an administrative reduction of the allowable leakage from 0.5 gpm to 0.15 gpm per steam generator was adopted for subsequent reactor operation. The proposed change to TS 3.4.6.2 incorporates this limit in the TS.

On March 6, 1986, the NRC provided guidance in the **Federal Register** (51 FR 7751) concerning examples of amendments that are not likely to involve significant hazards consideration. One example of amendments not likely to involve significant hazards considerations is example (ii) which involves "A change that constitutes an additional limitation, restriction, or control not presently included in the technical specifications, e.g., a more stringent surveillance requirement." The proposed change to TS 4.4.5.1.4 incorporates limits on sleeved tube wall thinning, not previously in the TS while the change to TS 3.4.6.2 decreases the existing primary-to-secondary leakage limit from 0.5 to 0.15 gpm. Both of the above changes to the TS are judged to be within the scope of example (ii), above. Accordingly, the Commission proposes to determine that the proposed change to the TS involves no significant hazards considerations.

Local Public Document Room location: Waterford Public Library, 49 Rope Ferry Road, Waterford, Connecticut 06385

Attorney for licensee: Gerald Garfield, Esquire, Day, Berry and Howard, One Constitution Plaza, Hartford, Connecticut 06103.

NRC Project Director: John F. Stolz

Northeast Nuclear Energy Company, et al., Docket No. 50-336, Millstone Nuclear Power Station, Unit No. 2, New London County, Connecticut

Date of amendment request: August 28, 1987

Description of amendment request: By application for license amendment dated August 28, 1987, Northeast Nuclear Energy Company, et al. (the licensee), requested changes to the Technical Specification (TS) for Millstone Unit 2 as follows:

(1) the maximum linear heat rate shown in TS Figure 3.2.1 would be reduced from 15.6 to 14.0 Kw/ft, and a factor of 1.115 would be applied to the planar peaking for reactor operation during Cycle 8 beyond a core average burnup of 9500 MWD/MTU, and

(2) the equations on TS Figure 3.2-3b would be deleted.

Basis for proposed no significant hazards consideration determination: On December 8, 1986 the NRC issued License Amendment No. 113 for Millstone Unit 2 to allow operation during Cycle 8. In our safety evaluation issued in support of License Amendment No. 113, we noted that the licensee had also provided analyses for operation of Millstone Unit 2 beyond the projected end-of-Cycle 8 (EOC-8) with the exception of the LOCA analyses. We further stated that, should the licensee wish to operate beyond EOC-8 (Cycle 8 Coastdown) a revised LOCA analyses would be required. The August 28, 1987 application provides proposed TS changes that address the LOCA analysis for Cycle 8 Coastdown.

Westinghouse has evaluated the Millstone Unit 2 LOCA analysis and found that Cycle 8 coastdown operation is acceptable as long as:

(1) The maximum linear heat rate is reduced from 15.6 Kw/ft to 14.0 Kw/ft.

(2) An additional multiplier of 1.115 (equal to 15.6/14.0, the ratio of the maximum linear heat rates) is included in the total planar radial peaking factor.

These additional restrictions apply only for operation past a core average burnup of 9,500 MWD/MTU, the predicted full power end of life for Cycle 8. The restriction on maximum linear heat rate would be incorporated in proposed TS Figure 3.2-3b while planar radial peaking factor would be incorporated into proposed TS 3/4.2.2.

Based upon the August 28, 1987 application, we conclude that the proposed amendment does not increase the probability or consequences of an accident previously evaluated. The proposed changes to the TS assure that the consequences of the design basis (LOCA) accident are not more severe than previously calculated. The proposed amendment also does not increase the probability of a LOCA, create the possibility of a new or different type of accident or a decrease in safety margin since no changes to plant equipment or new operating modes are involved. In this regard the use of plant coastdown, a decrease in power and/or average coolant temperature to extend the fuel cycle, is a routine end-of-cycle mode for Millstone Unit 2. Based upon the above, we propose to determine that the proposed changes to TS Figure 3.2.1 and TS 3/4.2.2 involve no significant hazards considerations.

The final change to the TS addressed herein involves the proposed deletion of the equations for total planer and integrated radial peaking factors from TS Figure 3.2-3b; these equations already appear in TS 3.2.2.1 and 3.2.3, respectively. The proposed deletion of the subject equation would have no effect on the TS other than to delete an unnecessary repetition of the equations.

On March 6, 1986, the NRC published guidance in the **Federal Register** (51 FR 7751) concerning examples of amendments that are not likely to involve a significant hazards consideration. One example provide in 51 FR 7751 of amendments not likely to involve significant hazards considerations is example (i) which involves "A purely administrative change to technical specifications: for example, a change to achieve consistency throughout the technical specifications, correction of an error, or a change in nomenclature."

The proposed deletion of the equations from TS Figure 3.2-3b is within the example (i) noted above. Accordingly, the Commission proposes to determine that the proposed change to the TS involves no significant hazards considerations.

Local Public Document Room location: Waterford Public Library, 49 Rope Ferry Road, Ferry Road, Waterford, Connecticut 06385

Attorney for licensee: Gerald Garfield, Esquire, Day, Berry and Howard, One Constitution Plaza, Hartford, Connecticut 06103

NRC Project Director: John F. Stolz

Northeast Nuclear Energy Company, et al., Docket No. 50-423, Millstone Nuclear Power Station, Unit No. 3, New London County, Connecticut

Date of amendment request: June 10, 1987

Description of amendment request: The amendment would revise Millstone

Unit No. 3 Technical Specification Section 4.3.4.2a to increase the main turbine control valve testing interval from weekly to monthly.

Basis for proposed no significant hazards consideration determination: In accordance with 10 CFR 50.92, the licensee has concluded that the proposed change does not involve a significant hazards consideration because the three criteria of 10 CFR 50.92(c) are not compromised. The licensee states that the proposed change would not:

1. Involve a significant increase in the probability or consequences of an accident previously evaluated. With an increase in the control valve test interval from weekly to monthly, there will be a negligible increase in the probability of significant plant damage, from 1.9×10^{-10}/year to 6.3×10^{-10}/year, caused by a turbine missile. The new probability value is more than the two orders of magnitude lower than the acceptance probability of significant damage as specified in Regulatory Guide 1.115 (i.e., less than 1×10^{-7} per year). In addition, the proposed change will minimize the likelihood of a plant trip due to load reductions for control valve testing since the tests will be done once per month instead of the current four per month. Therefore, the proposed change does not impact the consequences of an accident caused by a turbine missile.

2. Create the possibility of a new or different kind of accident from any previously evaluated. The proposed change produces a negligible effect on control valve reliability while reducing the likelihood of plant trip as the result of valve testing. Therefore, it does not create the possibility of an accident or malfunction of a different type than any evaluated previously in the safety analysis report. No design changes have been made to the turbine system; therefore, no new failure modes are introduced.

3. Involve a significant reduction in a margin of safety. The proposed change only modifies the testing interval for the turbine control valve and has no impact on the basis of the technical specification. Therefore, the proposed change will not reduce the margin of safety as specified in the basis of any technical specification.

The staff has reviewed the licensee's submittal and agrees with its no significant hazards determination.

Local Public Document Room location: Waterford Public Library, 49 Rope Ferry Road, Waterford, Connecticut 06385

Attorney for licensee: Gerald Garfield, Esquire, Day, Berry and Howard, One Constitution Plaza, Hartford, Connecticut 06103.

NRC Project Director: John F. Stolz

Northern States Power Company, Docket No. 50-263, Monticello Nuclear Generating Plant, Wright County, Minnesota

Date of amendment request: July 27, 1987, and September 3, 1987.

Description of amendment request: The proposed amendment would revise the Technical Specifications to allow operation of Cycle 13 by (1) deleting references to those Minimum Critical Power Ratio (MCPR) limits that are allowed to vary as a function of scram time; (2) adding a new fuel type in Cycle 13 - GE-8 fuel designated "BD319B" and adding Maximum Average Planar Linear Heat Generation Rates (MAPLHGR's) for this fuel type as well as other associated changes; (3) deleting MAPLHGR's for those fuel types that will not be used in the future; and (4) adding a new column of MAPLHGR's to provide a conservative projection of MALPHGR's for future GE 8 fuel. The TS would also be revised by making an administrative change to Figure 3.5-1 to assist the operator by labeling the allowed and prohibited areas of single loop operation, and by revising TS Section 5.2.B to allow the use of replacement control rod designs approved for BWR use by the NRC staff without the need for a license amendment each time a new design is approved.

Basis for proposed no significant hazards consideration determination: The proposed changes to the Technical Specification have been evaluated by the licensee to determine whether they constitute a significant hazards consideration as required by 10 CFR Part 50 Section 50.91 using the standards provided in Section 50.92. The licensee's evaluation is provided below:

The proposed changes would allow the operation of Cycle 13 in the Monticello Nuclear Generating Plant. The methods used are General Electric's advanced reload licensing methods known as GEMINI. This methodology has been reviewed and found acceptable by the NRC staff. The results of the analysis meet all acceptance criteria and, therefore, will not involve a significant increase in the probability or consequences of accidents previously analyzed.

Since the fuel used in Cycle 13 is very similar to that used in past cycles and the core will be operated in a similar manner, this proposed amendment will not create the possibility of a new or different kind of accident.

Since the safety analyses of Cycle 13 meet all acceptance criteria, this change will not involve a significant reduction in the margin of safety.

The NRC staff has reviewed the licensee's evaluation related to the Cycle 13 changes and concurs with their conclusions.

In addition, the Commission has provided guidance concerning the application of the standards for determining whether a significant hazards consideration exists by providing certain examples (51 FR 7751).

The changes proposed herein relating to Cycle 13 operation are representative of example (iii). The change is associated with a reloading, where no fuel assemblies significantly different from those found previously acceptable to the NRC for a previous core at Monticello are used, no significant changes have been made to the acceptance criteria for the Technical Specifications, and the methods used, although changed from the previous cycle, have previously been found to be acceptable by the NRC staff.

The other two changes are representative of example (i), which is "a purely administrative change to technical specifications; for example, a change to achieve consistency throughout the Technical Specifications, correction of an error, or a change in nomenclature."

The staff has reviewed and agrees with the licensee's evaluation. Therefore, the staff proposes to determine that the proposed amendment does not involve a significant hazards consideration.

Local Public Document Room location: Minneapolis Public Library, Technology and Science Department, 300 Nicollet Mall, Minneapolis, Minnesota 55401.

Attorney for licensee: Gerald Charnoff, Esq., Shaw, Pittman, Potts and Trowbridge, 2300 N Street, NW., Washington, DC 20037.

NRC Project Director: David L. Wigginton, Acting.

Pennsylvania Power and Light Company, Docket Nos. 50-387 and 50-388 Susquehanna Steam Electric Station, Units 1 and 2, Luzerne County, Pennsylvania

Date of amendment request: June 10, 1987 as revised by a letter dated September 1, 1987

Description of amendment request: The licensee's request, dated June 10, 1987, for the proposed amendments to revise the Technical Specifications (TSs) for Susquehanna Steam Electric Station (SSES), Units 1 and 2 was published in a

bi-weekly **Federal Register** notice dated July 15, 1987 (52 FR 26595). Based on certain additional analyses, the licensee has discovered that the required loads will be higher than those considered in its June 10, 1987 submittal. The licensee has, therefore, revised the June 10, 1987 request to include two new batteries (1D632 and 1D642) of larger capacity to be installed during Unit 1 September 1987 refueling outage. The new battery designs will be such that they will be able to handle the increased loads associated with the Alternate Rod Injection solenoid valves (an ATWS installation) and additional loads associated with emergency lighting, without any decrease in the battery capacity margin.

Basis for proposed no significant hazards consideration determination: The Commission has provided standards for determining whether a significant hazards consideration exists (10 CFR 50.92(c)). A proposed amendment to an operating license for a facility involves no significant hazards consideration if operation of the facility in accordance with the proposed amendment would not: (1) involve a significant increase in the probability or consequences of an accident previously evaluated; (2) create the possibility of a new or different kind of accident from any accident previously evaluated; or (3) involve a significant reduction in a margin of safety.

The staff has reviewed the licensee's revised request and concurs with the following basis and conclusion provided by the licensee in its September 1, 1987 submittal.

The proposed change does not:

(1) Involve an increase in the probability or consequences of an accident previously evaluated. FSAR Section 8.3.2.1.1.4 states the station batteries have sufficient capacity without the charger, to independently supply required loads for four hours. The Technical Specifications require the batteries be surveilled to dummy loads which are greater than the design loads. A calculation has been performed by our engineering department which verifies the new batteries have adequate capacity to power the actual loads on the 125V DC system. The new load profile contained in the technical specifications envelopes the actual loads.

(2) Create the possibility of a new or different kind of accident from any previously evaluated. As stated in Part (1), the batteries have sufficient capacity to power the actual battery loads thus enabling them to perform their intended function. Any postulated accident resulting from this change is bound(ed) by the previous analysis.

(3) Involve a reduction in the margin of safety. In accordance with IEEE 485, the rated battery capacity is 25% greater than required.

This margin allows replacement of the battery when its capacity decreased to 80% of its rated capacity (100% design load). This margin is maintained and was factored into the calculation referred to in Part (1). The proposed increase in technical specification surveillance load profiles maintains or increases the margin between these calculated loads and the tested loads.

Based on the above considerations, the Commission proposes to determine that the proposed changes involve no significant hazards consideration.

Local Public Document Room location: Osterhout Free Library, Reference Department, 71 South Franklin Street, Wilkes-Barre, Pennsylvania 18701

Attorney for licensee: Jay Silberg, Esquire, Shaw, Pittman, Potts and Trowbridge, 2300 N Street NW., Washington, DC 20037

NRC Project Director: Walter R. Butler

Sacramento Municipal Utility District, Docket No. 50-312, Rancho Seco Nuclear Generating Station, Sacramento County, California

Date of amendment request: September 24, 1986

Description of amendment request: The requested amendment would revise Technical Specification (TS) 4.17, "Steam Generators," to allow internal sleeving as an acceptable method for repairing tube leaks in the once through steam generators (OTSG) at Rancho Seco. Related changes would also be made to the applicable bases for this specification. The sleeving method proposed for use at Rancho Seco has been developed and qualified by Babcock and Wilcox and has previously been approved by the NRC staff for use at other facilities using OTSG.

Basis for proposed no significant hazards consideration determination: The Commission has provided standards for determining whether a significant hazards consideration exists (10 CFR 50.92(c)). A proposed amendment to a facility operating license involves no significant hazards consideration if operation of the facility in accordance with the proposed amendment would not: (1) involve a significant increase in the probability or consequences of an accident previously evaluated; (2) create the possibility of a new or different kind of accident from any accident previously evaluated; or (3) involve a significant reduction in a margin of safety.

The licensee has reviewed the proposed method of sleeving defective OTSG tubes and has provided the following discussion to support the conclusion that the use of this alternative to tube plugging would not:

1. involve a significant increase in the probability or consequences of an accident previously evaluated.

The USAR conservatively evaluated a double-ended rupture of a steam generator tube. A severed tube with a mechanical sleeve installed in it has been shown by tests to have mechanical strength at least as great as that of a new tube. Thus, a sleeved tube is no more likely to rupture than any other tube in the generator.

A sleeved tube is functionally equivalent to an unsleeved tube except for less effective heat transfer due to the air gap and slight pressure drop due to the primary flow constriction. Analysis has shown that if 500 sleeves were installed in each generator the steam superheat temperature would be reduced by 7.7°F at full power and primary flow would be reduced by less than 1%. These differences have been compared to the existing plant safety analysis basis and the results are acceptable.

2. create the possibility of a new or different kind of accident from any accident previously evaluated.

The only equipment affected by sleeving is the steam generator. The most severe malfunction of a steam generator is a tube rupture, and the consequences of a ruptured sleeve are no worse than the consequences of a ruptured tube. Sleeving does not increase the probability of steam generator failure because the sleeved tube has been shown to be mechanically stronger than an unsleeved tube. Thus a steam generator with sleeved tubes would perform in the same manner as one without sleeved tubes, and there is no risk of a new or different accident.

3. involve a significant reduction in a margin of safety.

The integrity of steam generator tubes is enhanced by the installation of sleeves due to the increased vibration stability margin and the ability to bridge over imperfections and degradations. Thus the margin of safety is not reduced.

On the basis of the above, the licensee concludes that the proposed changes to the TS to allow use of internal sleeving for repairing future OTSG tube leaks does not constitute a significant hazard, and in no way endangers the health and safety of the public.

The Commission has reviewed the licensee's no significant hazards consideration determination and agrees with the licensee's analysis. Accordingly, the Commission proposes to determine that the requested amendment involves no significant hazards consideration.

Local Public Document Room location: Sacramento City-County Library, 828 I Street, Sacramento, California 95814

Attorney for licensee: David S. Kaplan, Sacramento Municipal Utility District, 6201 S Street, P. O. Box 15830, Sacramento, California 95813

NRC Project Director: George W. Knighton

Sacramento Municipal Utility District, Docket No. 50-312, Rancho Seco Nuclear Generating Station, Sacramento County, California

Date of amendment request: December 5, 1986, March 26, 1987, and July 31, 1987.

Description of amendment request: The proposed Technical Specification amendment would incorporate the specifications associated with the Emergency Feedwater Initiation and Control (EFIC) System. The EFIC system was added to the Rancho Seco Nuclear Generating Station after an overcooling transient on December 26, 1985, demonstrated that the existing controls of the auxiliary feedwater system were inadequate during certain transients.

The EFIC is a four channel, safety grade, seismic Class 1 auxiliary feedwater initiation and control system. EFIC installation interfaces with the Main Steam System, Feedwater System, Auxiliary Feedwater System, Reactor Protection System, Safety Features Actuation System, Control Room Panels, Safe Shutdown Panel, Integrated Control System, Interim Data Acquisition and Display System, and Safety Parameter Display System. It is a logic, control, and electrical switching system which provides an independent safety grade system to control auxiliary feedwater.

The additional specifications requested to be incorporated with this proposed amendment include limiting conditions for operation, surveillance requirements, and related bases associated with the EFIC/Auxiliary Feedwater Systems. The addition of the EFIC related specifications will necessitate some redefining of terms and some modification of existing specifications. These proposed changes to the existing specifications are administrative in nature and serve to provide a smooth interface between the existing specifications and the new requirements.

Basis for proposed no significant hazards consideration determination: The Commission has provided guidance concerning the application of the standards for determining whether a significant hazards consideration exists by providing certain examples (51 FR 7751). The examples of actions involving no significant hazards considerations include: (i) a purely administrative change to technical specifications: for example, a change to achieve consistency throughout the technical specifications, correction of an error, or a change in nomenclature, and (ii) a change that constitutes an additional limitation, restriction, or control not presently included in the technical specifications: for example, a more stringent surveillance requirement.

The changes included in the proposed amendment fall into the two categories referenced above. The majority of the proposed changes add new specifications, which provide the limitations, restrictions, and surveillances associated with the EFIC/Auxiliary Feedwater Systems (example (ii)). The remaining changes involve changes to achieve consistency between the added EFIC sections and the existing sections of the specifications (example (i)).

On these bases, the Commission proposes to determine that the proposed amendment does not involve a significant hazards consideration.

Local Public Document Room location: Sacramento City-County Library, 828 I Street, Sacramento, California 95814

Attorney for licensee: David S. Kaplan, Sacramento Municipal Utility District, 6201 S Street, P. O. Box 15830, Sacramento, California 95813

NRC Project Director: George W. Knighton

Sacramento Muncipal Utility District, Docket No. 50-312, Rancho Seco Nuclear Generating Station, Sacramento County, California

Date of amendment request: April 23, 1987

Description of amendment request: The proposed amendment would make the following two changes to the Technical Specifications:

(1) Subsections would be added to the Technical Specifications which address Low Temperature Overpressure Protection (LTOP) Systems and the associated bases. Specification 3.2.2 (LTOP Systems) would be modified to permit filling and venting High Pressure Injection System piping, surveillance testing, and maintenance of the Core Flood System. The added subsections would provide more detail about valve positioning requirements (a) when LTOP is enabled, (b) when venting the Makeup and Purification System, and (c) when performing surveillance of core flood tanks.

(2) A minimum flow rate acceptance criterion for surveillance testing of the Nuclear Services Electrical Building (NSEB) air handling unit is proposed to be included in Technical Specification 4.31. This new specification would provide surveillance standards for NSEB heating ventilation and air conditioning equipment.

Basis for proposed no significant hazards consideration determination: The Commission has provided standards for determining whether a significant hazards consideration exists as stated in 10 CFR 50.92(c). A proposed amendment to an operating license for a facility involves no significant hazards consideration if operation of the facility in accordance with the proposed amendment would not: (1) involve a significant increase in the probability or consequences of an accident previously evaluated; or (2) create the possibility of a new or different kind of accident from any accident previously evaluated; or (3) involve a significant reduction in a margin of safety. The propose changes to the Technical Specifications are addressed below relative to each of the three criteria.

Criterion 1

While the changes to Technical Specification 3.2.2 relax previous restrictions on Emergency Core Cooling System (ECCS) operation, they do not affect LTOP system operability nor change restrictions on operation of ECCS pumps. For this reason the changes do not involve a significant increase in the probability or consequence of an accident previously evaluated.

The incorporation of a specific acceptance criterion for flow rate in Technical Specification 4.31 does not involve a significant increase in the probability or consequences of an accident previously evaluated because it is a change which constitutes a more stringent surveillance requirement not presently included in the Technical Specifications.

Criterion 2

Neither the relaxation of restriction of ECCS valve position during low temperature operation nor the incorporation of a specific acceptance criteria for testing of the NSEB air handling unit creates the possibility of a new or different kind of accident from any accident previously evaluated because they do not represent changes in plant design.

Criterion 3

While the proposed changes to Technical Specification 3.2.2 relax previous restrictions on ECCS motor operated valve positions during low temperature operation, they do not affect LTOP system operability nor change restrictions on operation of ECCS pumps. For this reason the proposed changes do not involve a significant reduction in a margin of safety.

The incorporation of a specific acceptance criterion for flow rate in Technical Specification 4.31 does not involve a significant reduction in a margin of safety because it is a change which constitutes a more stringent surveillance requirement not presently included in the Technical Specifications.

Local Public Document Room location: Sacramento City-County Library, 828 I Street, Sacramento, California 95814

Attorney for licensee: David S. Kaplan, Sacramento Municipal Utility District, 6201 C Street, P. O. Box 15830, Sacramento, California 98513

NRC Project Director: George W. Knighton

Southern California Edison Company, et al., Docket Nos. 50-361 and 50-362, San Onofre Nuclear Generating Station, Unit Nos. 2 and 3, San Diego County, California

Date of amendment request: July 17, 1987 (Reference PCN-235)

Description of Amendment Request: The proposed change will revise Technical Specification (TS) 3/4.1.1.1, "Boration Control - Shutdown Margin Tavg greater than 200°F," TS 3/4/.1.1.2, "Shutdown Margin - Tavg less than or equal to 200°F," TS 3/4.1.2.7, "Borated Water Source - Shutdown," TS 3/4.1.2.8, "Borated Water Sources - Operating," TS 3/4.5.1, "Safety Injection Tanks," TS 3/4.5.4, "Refueling Water Storage Tank," TS 3/4.6.2.2, "Recirculation Flow pH Control," TS 3/4.9.1, "Refueling Operations - Boron Concentration," TS 3/4.10.1, "Special Test Exceptions - Shutdown Margin," and associated Bases.

These specifications define the limiting conditions for operation (LCO), volumes and concentrations of borated water to be maintained in the refueling water storage tank (RWST), the boric acid makeup (BAMU) tanks and safety injection tanks (SIT), the minimum boron concentration to be maintained in the refueling mode as well as the amount of trisodium phosphate (TSP) to be stored inside containment. These specifications also require the periodic performance of specified surveillance tests and inspections to verify that the LCO's are met, and identify compensatory actions to be taken in the event that LCO's are not met.

In normal plant operation, borated water is used to maintain reactivity control and makeup for coolant contraction during plant cooldown. During postulated accidents, borated water would be injected into the reactor coolant system (RCS) to maintain RCS inventory and ensure the reactor is subcritical. In a postulated loss of coolant accident (LOCA) the reactor core is reflooded by borated water injected by the SIT's, the safety injection pumps taking suction from the RWST, and the charging pumps taking suction from the BAMU tanks. The RWST also provides a source of borated water for the containment spray system which suppresses containment pressure during postulated LOCA's and steamline break accidents. During a LOCA, borated water spilled from the RCS accumulates along with containment spray water in the containment sump. After the RWST inventory is exhausted, the emergency core cooling and containment spray systems continue recirculating borated water from the containment sump.

Trisodium phosphate stored in baskets in the containment sump dissolves in the accumulated water, raising its pH. This minimizes stress corrosion cracking of metals inside containment.

The proposed change will revise borated water source concentration and volume requirements consistent with the assumptions and results of analysis supporting extended fuel cycles. The licensee has found that extended fuel cycles have necessitated an increase in the refueling boric acid concentration. The proposed change would also make a corresponding increase in TSP requirements to ensure its ability to neutralize the increased amount of boric acid.

The proposed change consists of seven separate items: (1) the minimum refueling concentration and RWST lower limit on boron concentration would be increased from 1720 to 2350 ppm; (2) the RWST and SIT upper limits on concentration would be increased from 2500 to 2800 ppm; (3) Figure 3.1-1, which specifies the concentration and volume of boric acid to be maintained in the BAMU tanks during operation based on RWST concentration, would be revised to reflect the revised RWST concentration ranges; (4) the volume of borated water required in either the BAMU tanks or RWST when the plant is in cold shutdown or refueling would be decreased from 5150 to 4150 gallons; (5) the lower limit on SIT concentration would be increased from 1720 to 1850 ppm; (6) the amount of TSP required in containment would be increased from 15,400 lbs to 17,461 lbs.; and (7) an erroneous reference to NaOH is removed from the TS bases. A more detailed description of each of these items is given below.

(1) Increase in minimum refueling mode and RWST boron concentration.

The proposed change would increase the minimum refueling mode and RWST boron concentration from 1720 to 2350 ppm. The proposed 2350 ppm lower limit is based on the refueling concentration assumed as an initial condition for the Mode 6 (Refueling) boron dilution event analysis. An assumed initial refueling boron concentration of 2300 ppm will preserve a minimum of 60 minutes to criticality in Mode 6 with the RCS at mid-loop and three charging pumps running. A 50 ppm uncertainty allowance is added to the assumed value to arrive at the proposed 2350 ppm refueling concentration. The proposed change would also revise to "2350 ppm" all references to "1720 ppm" in TS 3/4.1.1.1, "Boration Control - Shutdown Margin - Tavg greater than 200°F"; TS 3/4.1.1.2, "Shutdown Margin - Tavg less than or equal to 200°F"; TS 3/4.1.2.7, "Borated Water Source - Shutdown"; TS 3/4.1.2.8, "Borated Water Source - Operating"; TS 3/4.5.4, "Refueling Water Storage Tank"; TS 3/4.9.1, "Refueling Operations - Boron Concentration," and TS 3/4.10.1, "Special Test Exceptions - Shutdown Margin." Similar references in the associated bases sections are also revised.

(2) Increase in RWST and SIT boron concentration upper limit.

The proposed change would increase the upper limit on boron concentration from 2500 ppm to 2800 ppm boron. The licensee stated that this increase is required to preserve an adequate operating range of concentrations with the increase in lower limits described above. An upper limit on concentration is specified in ensure that there will not be an unacceptably high concentration of boric acid in the core resulting in precipitation in the long term cooling phase following a LOCA. Although the proposed change would result in a higher post-LOCA boric acid concentration (a maximum of 2812 ppm boron), the licensee stated that the concentration would remain less than the solubility limit for post-LOCA conditions. Accordingly, the proposed change would revise references to 2500 ppm upper limits to 2800 ppm in TS 3/4.1.2.8, "Borated Water Sources - Operating," TS 3/4.5.1, "Safety Injection Tanks," TS 3/4.5.4, "Refueling Water Storage Tank." The proposed change

would also revise Surveillance Requirement 4.6.2.2.b of TS 3/4.6.2.2, "Recirculation Flow pH Control" which uses an aggregate post LOCA concentration to test trisodium phosphate stored in containment. The proposed change would increase this concentration from 2482 to 2812 ppm boron.

(3) Revisions to Figure 3.1-1.

Figure 3.1-1 defines the volumes and concentrations of boric acid to be maintained in the BAMU tanks corresponding to various RWST concentrations. Currently Figure 3.1-1 incorporates four curves which represent the minimum boric acid volume as a function of concentration required from BAMU tanks for RWST concentrations of 1720, 2000, 2300, and 2500 ppm. The proposed change would revise Figure 3.1-1 to include four curves for RWST concentrations of 2350, 2500, 2650 and 2800 ppm, the new range of RWST concentrations described above. According to the licensee, the new curves were generated using the same methodology as was used for the existing curves which is documented in CEN-316, "Boric Acid Makeup Tank Concentration Reduction Effort." This methodology was previously reviewed and approved for San Onofre Nuclear Generating Station, Units 2 and 3, in conjunction with the issuance of Amendments 43 and 32 respectively. The licensee stated that the proposed figure will ensure that sufficient inventory is maintained in the BAMU tanks to support a natural circulation cooldown while maintaining 5.15% shutdown margin, so that the cool down can continue to cold shutdown with inventory and boron addition from the RWST, assuming a loss of offsite power, a limiting single failure and that the letdown line is unavailable. Moreover, the licensee stated that the minimum BAMU tank inventory specified in Figure 3.1-1, 4151 gallons, is sufficient to support credit taken for charging pump operation in a postulated small break LOCA.

(4) Decrease in cold shutdown BAMU tank/RWST inventory requirement.

The proposed change would reduce the BAMU tank or RWST inventory requirements specified in TS 3/4.3.1.2.7, "Borated Water Source - Shutdown" from 5150 to 4150 gallons. The licensee stated that the volume and concentration specified is based on maintaining a minimum of 3.0% shutdown margin after xenon decay during cooldown from 200°F to 140°F. 4150 gallons are required to makeup for coolant contraction during the cooldown. With the proposed increase in minimum boron concentration from 1720 to 2350 ppm, the licensee stated that this volume would also contain in excess of the boron required to maintain a 3.0% shutdown margin.

(5) Increase in SIT lower concentration limit.

TS 3/4.5.1, "Safety Injection Tanks," specifies a minimum SIT concentration of 1720 ppm boron. The proposed change would increase this to 1850 ppm. The licensee stated that the lower limit on SIT concentration will ensure that the reactor will be at least 1% subcritical following a large break LOCA taking no credit for Control Element Assembly (CEA) insertion.

(6) Increase in TSP requirements.

TS 3/4.6.2.2, "Recirculation Flow pH Control," requires a minimum of 15,400 lbs (256 cubic feet) TSP to be available in storage racks in the containment. The required amount of TSP is sufficient to neutralize the maximum amount of boric acid postulated to be inside containment following a LOCA. With an increase in maximum RWST concentration to 2800 ppm, an increase in TSP to 17,461 lbs (291 cubic feet) is required. The proposed change would correspondingly increase the amount of TSP specified in surveillance requirement 4.6.2.2.b from 3.00 grams to 3.43 grams.

(7) Removal sodium hydroxide from the Bases.

The proposed change would also remove from Bases Sections 3/4.1.2, "Boration Systems" and 3/4.5.4, "Refueling Water Storage Tank" references to sodium hydroxide (NaOH) for pH control. These changes to the bases were inadvertently overlooked in conjunction with Amendments 51 and 40 for Units 2 and 3, respectively, which approved deletion of the NaOH iodine removal system.

Basis for Proposed No Significant Hazards Determination: The Commission has provided guidance concerning the application of standards for determining whether a significant hazards considerations exists by providing certain examples (51 FR 7751) of amendments that are considered not likely to involve significant hazards considerations. Example (iii) relates to a change for a nuclear power reactor resulting from a core reloading if no fuel assemblies are significantly different from those found previously acceptable to the NRC. This assumes that no significant changes are made to the acceptance criteria for the Technical Specification and that the analytical methods used to demonstrate conformance with Technical Specifications and regulations are not significantly changed and that the NRC has previously found such methods acceptable.

The proposed changes would revise borated water source and trisodium phosphate requirements as a result of increases in critical boron concentration related to extended fuel cycles. The proposed changes to specified values are either bounded by analyses presented in the FSAR or were generated using previously reviewed and approved methodology.

Specifically, the proposed increase in minimum RWST and refueling boron concentration (Item 1 above) preserves a minimum of 60 minutes to criticality for the refueling mode boron dilution event analysis, using the previously reviewed and approved analytical methodology presented in the FSAR. The proposed upper limits on concentration for the RWST and SIT (Item 2 above) continue to ensure the boric acid does not precipitate in the core during the long term cooling phase following a LOCA. The proposed revision to BAMU tank inventory requirements (Item 3 above) was generated using the same analytical methodology as the existing requirements which were approved by Amendment 43 and Amendment 32 for Units 2 and 3, respectively.

The proposed reduction in BAMU tank or RWST inventory from 5150 to 4150 gallons with the plant in cold shutdown or refueling (Item 4 above) uses the same methodology as was used for the current value, taking into account the higher proposed minimum boron concentration. The proposed value would maintain in excess of 3.0% shutdown margin during a cooldown from 200°F to 140°F.

The proposed change described in Item 5 above would increase the minimum SIT boron concentration from 1720 to 1850 ppm. SRP Section 4.3, "Nuclear Design," requires reactivity control systems to have a combined capability in conjunction with poison addition from the ECCS to reliably control reactivity changes under postulated accident conditions with a margin for stuck control rods. In the large break LOCA analysis, conservatively, no credit is taken for control rod insertion. The proposed change would ensure that the reactor would be maintained subcritical during a LOCA and therefore would continue to meet this acceptance criteria.

The proposed increase in trisodium phosphate from 15,400 to 17,461 lbs (Item 6 above) compensates for the increase in RWST and SIT maximum boric acid concentration. SRP Section 6.1.1, "Engineered Safety Feature Materials," requires that the composition of containment spray and core cooling water be controlled to ensure a

minimum pH of 7.0 following a LOCA to inhibit initiation of stress corrosion cracking. The proposed increase in TSP requirements continues to meet this SRP criterion.

The proposed changes are related to a core reloading for extended fuel cycles, are generated by previously approved analytical methodology or are bounded by previously reviewed analysis, and preserve existing acceptance criteria. Therefore, the proposed changes in Items 1-6 are similar to Example (iii) of the Commission's guidance. On this basis the NRC staff proposes to determine that they do not involve a significant hazards consideration.

The proposed changes described in Item 7 above are administrative in nature since they would remove certain references to sodium hydroxide in the Bases section that were inadvertently not removed when Amendments 51 and 40 were issued on August 11, 1986. These amendments require the use of trisodium phosphate rather than sodium hydroxide. Example (i) of the Commission's guidance on amendments that are not likely to involve a significant hazards consideration relates to a purely administrative change to technical specifications: for example, a change to achieve consistency throughout the technical specifications, correction of an error, or a change in nomenclature. Thus the proposed change in Item 7 is similar to Example (i) of the Commission's guidance and on this basis the NRC staff proposes to determines that it does not involve a significant hazards consideration.

Local Public Document Room location: General Library, University of California, P. O. Box 19557, Irvine, California 92713.

Attorney for licensee: Charles R. Kocher, Assistant General Counsel, James Beoletto, Esquire, Southern California Edison Company, P.O. Box 800, Rosemead, California 91770

NRC Project Director: George W. Knighton

Southern California Edison Company, et al, Docket Nos. 50-361 and 50-362, San Onofre Nuclear Generating Station, Units 2 and 3, San Diego County, California

Date of amendment request: August 5, 1987 (Reference PCN-237)

Description of amendment request: The proposed change will revise Technical Specification (TS) 3/4.2.7, "Axial Shape Index" and its associated basis. Technical Specification 3.2.7 is provided to ensure that the actual value of the axial shape index (ASI) is maintained within the range assumed as an initial condition in the safety analyses. The safety analyses assume that ASI is between -0.3 and +0.3. ASI is the power generated in the lower half of the core less the power generated in the upper half of the core divided by the sum of these powers. The ASI can be calculated utilizing either the Core Operating Limit Supervisory System (COLSS) or any operable Core Protection Calculator (CPC) channel. The real time monitoring capability and accuracy of COLSS allows COLSS to monitor power limit margins closely (using incore, self-powered, rhodium detectors).

The proposed change to this specification is required to support Cycle 4 operation (24 month cycle versus the current 18 month cycle). Analysis of COLSS uncertainties has shown that the axial shape uncertainty for Cycle 4 increases from ± 0.02 ± 0.03. This is due primarily to the effect of increased cycle length on the measurement uncertainties associated with the incore detectors.

Technical Specification 3.2.7 currently requires that the ASI be maintained within the COLSS Operable limits (ASI between -0.28 and +0.28) or the COLSS Out of Service (CPC) limits (ASI between -0.20 and +0.20). The current COLSS Operable limits for the ASI are based on the value assumed in the safety analyses (ASI between -0.30 and +0.30) taking into account the axial shape uncertainty (±0.02). For Cycle 4 operation, the axial shape uncertainty increases to ±0.03. Therefore, the COLSS ASI alarm limit will be changed from ASI between -0.28 and +0.28 to ASI between -0.27 and +0.27. To allow this, the proposed change would replace the numerical values associated with the COLSS Operable limit with a requirement to maintain the COLSS calculated ASI within the "COLSS ASI alarm limits." This term will be defined in the revised bases for TS 3.2.7 and will be equal to the ASI range assumed in the safety analyses less the ASI uncertainty that is applicable to the current operating cycle.

Surveillance Requirement 4.2.7 will also be revised. Currently, Section 4.2.7 only requires that ASI be determined to be within its limits once per 12 hours when COLSS is in service or out of service. The proposed change will take advantage of the fact that colss continuously monitors ASI when it is in service. Specifically, ASI will be required to be continuously monitored and determined to be within its limit with COLSS in service. With COLSS out of service, the surveillance requirement will be unchanged. That is, ASI will be required to be verified to be within its limit at least once every 12 hours using any operable CPC channel.

The basis for this specification will be expanded to include discussions of the 20% minimum power limitation in Mode 1, what ASI is and the two methods by which this parameter is calculated. The basis currently states that this specification ensures that the actual value of the ASI is maintained within the range of values used in the safety analyses.

Basis for proposed no significant hazards consideration determination: The NRC staff proposes to determine that the proposed amendment does not involve a significant hazards consideration because, as required by the criteria of 10 CFR 50.92(c), operation of the facility in accordance with the proposed amendment would not: (1) involve a significant increase in the probability or consequences of an accident previously evaluated; (2) create the possibility of a new or different kind of accident from any accident previously evaluated; or (3) involve a significant reduction in a margin of safety.

The following is a discussion of these three criteria and how the proposed change meets each criterion.

1. The NRC staff proposes to determine that operation of the facility in accordance with the proposed amendment does not involve a significant increase in the probability or consequences of any accident previously evaluated for the reasons given below. Replacing the numerical limiting values of the ASI range with a word definition will not change the value that will be used as a limiting condition of operation, but will permit a change in the ASI limit range if cycle-dependent uncertainties change. For Cycle 4 as compared to Cycle 3, the range will decrease from ±0.28 to ±0.27, due to an increase in uncertainty factor from ±.02 to ±.03. Thus, the proposed change still requires that ASI be maintained within the ASI range assumed in the safety analyses, ±0.30. Further, the proposed change requires continuous monitoring of ASI when colss is in service. This is more restrictive than the current TS which requires monitoring once every 12 hours. In summary, the proposed change will result in the ASI safety setting being selected so that: (1) no safety limit will be exceeded as a result of an anticipated operational occurrence and (2) the consequences of a design basis accident will be acceptable. Therefore, the proposed change will not involve a significant increase in the probability or consequences of any accident previously evaluated.

2. The NRC staff proposes to determine that operation of the facility in accordance with the proposed amendment does not create the possibility of a new or different kind of accident from any accident previously evaluated because the proposed amendment would not change the configuration of the plant, or its manner of operation. ASI is specified as an initial condition in the safety analyses. This parameter will not be changed nor will it be exceeded. The LCO will be changed from a numerical limit to a requirement to maintain the COLSS-calculated ASI within the COLSS ASI alarm limits. Therefore, the proposed change will not create the possibility of a new or different kind of accident from any accident previously evaluated.

3. The NRC staff proposes to determine that operation of the facility in accordance with the proposed amendment does not involve a significant reduction in a margin of safety. The proposed change will replace the numerical limit associated with the ASI with a requirement to maintain ASI within the COLSS ASI alarm limit when COLSS is in service. The COLSS ASI alarm limit is set below the value assumed in the safety analyses, accounting for COLSS uncertainties. The proposed change will ensure that this requirement is met. Therefore, the proposed change will not involve a significant reduction in a margin of safety.

Local Public Document Room location: General Library, University of California at Irvine, Irvine, California 92713.

Attorneys for licensee: Charles R. Kocher, Esq., Southern California Edison Company, 2244 Walnut Grove Avenue, P. O. Box 800, Rosemead, California 91770 and Orrick, Herrington & Sutcliffe, Attn.: David R. Pigott, Esq., 600 Montgomery Street, San Francisco, California 94111.

NRC Project Director: George W. Knighton

Tennessee Valley Authority, Docket No. 50-327 Sequoyah Nuclear Plant, Unit 1 Hamilton County, Tennessee

Date of amendment request: May 15, 1987 (TSC 87-23)

Description of amendment request: Tennessee Valley Authority (TVA) proposes an amendment to the Sequoyah Nuclear Plant (SQN) Unit 1 Technical Specifications (TS) to delete the requirements of Section 2.c.10, "Water Chemistry Control Program," of the SQN Unit 1 Facility Operating License.

Basis for proposed no significant hazards consideration determination: SQN license condition 2.c.10 requires that certain provisions be incorporated into the water chemistry program. These were accomplished as outlined by letter from L. M. Mills to A. Schwencer dated August 13, 1980. However, SQN no longer follows action levels identical to those outlined in that letter. The Secondary Water Chemistry Program at SQN presently uses the guidelines established in the Steam Generator Owners' Group (SGOG) Special Report EPRI-NP-2704, "PWR Secondary Water Chemistry Guidelines." These guidelines were recommended in NRC Generic Letter 85-02 and referenced in Section 2.5 of NUREG-0844. These recommendations are in conflict with license condition 2.c.10. TVA is committed to maintain steam generator tube integrity by Amendment 3 to the Final Safety Analysis Report (FSAR). Specific water chemistry limits and associated action levels are based on the SGOG guidelines and are incorporated into plant procedures. In addition, TS 6.8.5.c requires a program for monitoring secondary water chemistry to inhibit steam generator tube degradation.

The Commission has provided Standards for determining whether a significant hazards determination exists as stated in 10 CFR 50.92(c). 10 CFR 50.91 requires that at the time a licensee requests an amendment, it must provide to the Commission its analyses, using the standards in Section 50.92, on the issue of no significant hazards consideration. The staff has reviewed the proposed amendment and concluded that the amendment would not:

(1) involve a significant increase in the probability or consequences of an accident previously evaluated. License condition 2.c.10 was included as a measure to ensure that steam generator tubing would not be subjected to conditions that would cause degradation of integrity. The SGOG guidelines are more sensitive to critical water chemistry to minimize steam generator tube degradation than the license condition and therefore do not increase the probability or consequences of an accident previously evaluated;

(2) create the possibility of a new or different kind of accident from any previously evaluated because the proposed change to delete license condition 2.c.10 will not present new or different safety concerns. This change will still require the licensee to monitor critical parameters of secondary water chemistry necessary to control corrosive conditions in the steam generator and maintain tube integrity; or

(3) involve a significant reduction in a margin of safety. The improved Secondary Water Chemistry Program will provide better control of corrosive conditions that contribute to steam generator tube degradation and therefore, the margin of safety is not significantly reduced.

Therefore, the staff proposes to determine that the application for amendments involves no significant hazards.

Local Public Document Room location: Chattanooga-Hamilton County Library, 1001 Broad Street, Chattanooga, Tennessee 37402.

Attorney for licensee: General Counsel, Tennessee Valley Authority, 400 West Summit Hill Drive, E11 B33, Knoxville, Tennessee 37902.

NRC Assistant Director: John A. Zwolinski

Vermont Yankee Nuclear Power Corporation, Docket No. 50-271, Vermont Yankee Nuclear Power Station, Vernon, Vermont

Date of application for amendment: April 28, 1987

Description of amendment request: The amendment would revise the Technical Specifications to reflect administrative changes to Section 6 of the Technical Specifications. More specifically these changes would include:

1. Reorganization of the current Chemistry and Health Physics Department into two separate departments and a change to the Plant Operations Review Committee (PORC) membership to reflect the two supervisors in this area.

2. An administrative correction to include a change previously granted in Amendment 79, but inadvertently deleted in Amendment 87.

3. Elimination of a reference to a non-existent group designation and clear definition of authority for designating PORC alternates.

4. A revision of the authority regarding review and approval of procedures.

Basis for proposed no significant hazards consideration determination: The Commission has provided standards for determining whether a significant hazards determination exists as stated in 10 CFR 50.92(c). A proposed amendment to an operating license involves no significant hazards considerations if operation of the facility in accordance with the proposed amendment would not: (1) Involve a significant increase in the probability or consequences of an accident previously evaluated, or (2) create the possibility of a new or different kind of accident from any accident previously evaluated, or (3)

involve a significant reduction in a margin of safety.

The licensee has evaluated the proposed amendment against the standards in 10 CFR 50.92 and has determined the following:

The organizational changes described in Section 6 (Administrative Controls) do not involve a significant increase in the probability or consequences of an accident previously evaluated because they are strictly organizational changes which will enhance station management and PORC review over plant activities associated with safe and effective operations. These changes do not create the possibility of a new or different kind of accident from any accident previously evaluated because they likewise enhance organizational and station management review over plant activities related to safe effective operations. The changes do not involve a significant reduction in a margin of safety because they are intended to enhance management and PORC attention related to safe and effective operations, as well as clarify the Technical Specifications regarding certain management authority by removing a reference to a no longer functioning plant group, and additionally eliminating a redundant step in the review and approval of plant procedures with no adverse impact in plant safety or safety margins. Therefore, Vermont Yankee has determined that these changes have no safety significance and that the proposed amendment will not alter any of the accident analyses.

The Commission has provided guidance concerning the application of the standards for determining whether a significant hazards consideration exists by providing certain examples. The examples of actions involving no significant hazards include a purely administrative change to Technical Specifications, for example, a change to achieve consistency throughout the Technical Specifications, correction of an error, or a change in nomenclature.

Based on the above, we have concluded that this change does not constitute a significant hazards consideration, as defined in 50.92(c), since the proposed changes to Section 6 (Administrative Controls) will have little or no impact on public health and safety and are strictly administrative in nature.

The NRC staff has reviewed the licensee's no significant hazards consideration determination and agrees with the licensee's analysis. Based on this review, the staff therefore proposed to determine that the proposed amendment does not involve a significant hazards consideration.

Local Public Document Room location: Brooks Memorial Library, 224 Main Street, Brattleboro, Vermont 05301.

Attorney for licensee: John A. Ritscher, Esquire, Ropes and Gray, 225 Franklin Street, Boston Massachusetts 02110.

NRC Project Director: Victor Nerses, Acting Director

Virginia Electric and Power Company, Docket Nos. 50-280 and 50-281, Surry Power Station, Unit Nos. 1 and 2, Surry County, Virginia

Date of amendment requests: April 1, 1987

Description of amendment requests: The proposed amendments would revise Figures 3.12-1A and 3.12-1B of the Surry Technical Specifications (TS) which govern the control rod insertion limits. These figures are currently presented in terms of fraction inserted as a function of power fraction and are based on a fully withdrawn position of 228 steps. The insertion limit curves will be changed to rod group position in steps as a function of power and the fully withdrawn position will be defined as 225 steps. Aside from changing the fully withdrawn position, the bank overlap and the insertion limits in terms of steps will not change. These changes will allow greater operational flexibility with respect to control rod bank positioning as a means of minimizing localized rod cluster control assembly wear.

Basis for proposed no significant hazards consideration determination: The Commission has provided standards in 10 CFR 50.92(c) for determining whether a significant hazards consideration exists. A proposed amendment to an operating license for a facility involves no significant hazards consideration if operation of the facility in accordance with the proposed amendment would not: (1) involve a significant increase in the probability or consequences of an accident previously evaluated; or (2) create the possibility of a new or different kind of accident from any accident previously evaluated; or (3) involve a significant reduction in a margin of safety.

The licensee has evaluated the changes against the standards provided above and has determined that the changes would involve no significant hazards consideration because:

(1) The proposed changes involve a revision to certain operational constraints. The accident probabilities will not significantly change because no equipment modifications or design changes are involved. The extremely small impact on power distributions and core physics key analysis parameters resulting from the change in the fully withdrawn control rod position can easily be accommodated within the existing Surry core design limits and none of the parameter changes exceed the available margin to the key parameter safety analysis limits. Therefore, the current safety analyses remain bounding. Thus, the probabilities or consequences of an accident previously evaluated will not significantly increase.

(2) The proposed changes do not involve any alterations to plant equipment or procedures which would introduce any new or unique operational modes or accident precursors. However, the proposed changes will alter the fully withdrawn control rod position as a means of minimizing localized control rod cluster control assembly wear. Thus, the proposed changes will not create the possibility of a new or different kind of accident from any accident previously evaluated.

(3) As stated above, the parameter changes do not exceed the available margin of the key parameter safety analysis limits. Therefore, the current Updated Final Safety Analysis Report analyses remain bounding and there is no reduction in a margin of safety as defined in the basis for any technical specification. Therefore, the appropriate safety margins are maintained. Thus, the proposed changes do not involve a significant reduction in a margin of safety.

The staff agrees with the licensee's analysis of the three standards and proposes to determine that the proposed amendments do not involve a significant hazards consideration.

Local Public Document Room location: Swem Library, College of William and Mary, Williamsburg, Virginia 23185.

Attorney for licensee: Mr. Michael W. Maupin, Hunton and Williams, Post Office Box 1535, Richmond, Virginia 23213.

NRC Project Director: Herbert N. Berkow

Virginia Electric and Power Company, Docket Nos. 50-280 and 50-281, Surry Power Station, Unit Nos. 1 and 2, Surry County, Virginia

Date of amendment request: April 23, 1987

Description of amendment request: The proposed amendments would include the core exit thermocouple (CET) system in the accident monitoring instrumentation listed in Tables 3.7-6 and 4.1-2 of the Surry Technical Specifications. The proposed change addresses the CET requirements of

NUREG-0737, Item II.F.2, "Instrumentation for Detection of Inadequate Core Cooling." In addition, minor editorial changes would be made in both of the above tables to reflect the consolidation of the CET system along with the already existing subcooling margin monitor (SMM) and the reactor vessel level indicating system (RVLIS) into one system called inadequate core cooling monitor.

Basis for proposed no significant hazards consideration determination: The Commission has provided standards in 10 CFR 50.92(c) for determining whether a significant hazards consideration exists. A proposed amendment to an operating license for a facility involves no significant hazards consideration if operation of the facility in accordance with the proposed amendment would not: (1) involve a significant increase in the probability or consequences of an accident previously evaluated; or (2) create the possibility of a new or different kind of accident from any accident previously evaluated; or (3) involve a significant reduction in a margin of safety.

The licensee has evaluated the proposed changes against the standards provided above and has determined that the changes would involve no significant hazards consideration because:

1. The operability requirements and surveillance requirements have not been decreased by these changes and the current safety analysis remains bounding. Therefore, the proposed changes do not involve a significant increase in the probability or consequences of an accident previously evaluated.

2. The proposed changes do not involve any alterations to plant equipment or procedures which would introduce any new or unique operational modes or accident precursors. Therefore, the proposed changes do not create the possibility of a new or different kind of accident from any accident previously evaluated.

3. The current Updated Final Safety Analysis Report analyses remain bounding; therefore there is no reduction in a margin of safety.

In addition, on March 6, 1986, the NRC published guidance in the **Federal Register** (51 FR 7751) concerning examples of amendments not likely to involve a significant hazards consideration. One example of amendments not likely to involve significant hazards considerations is example (ii), which involves "A change that constitutes an additional limitation, restriction, or control not presently included in the technical specifications, e.g., a more stringent surveillance requirement." The proposed TS include additional requirements on core exit thermocouples. Therefore, it is similar to example (ii) as noted above.

Another example in 51 FR 7751 of amendments that are not likely to involve a significant hazards consideration is example (i), which involves "A purely administrative change to technical specifications: for example, a change to achieve consistency throughout the technical specifications, correction of an error, or a change in nomenclature." The proposed editorial changes to TS Tables 3.7-6 and 4.1-2 provide clarity and, thus, are similar to example (i) noted above.

Therefore, the staff agrees with the licensee's analysis and proposes to determine that the proposed amendments do not involve a significant hazards consideration.

Local Public Document Room location: Swem Library, College of William and Mary, Williamsburg, Virginia 23185.

Attorney for licensee: Mr. Michael W. Maupin, Hunton and Williams, Post Office Box 1535, Richmond, Virginia 23213.

NRC Project Director: Herbert N. Berkow

Virginia Electric and Power Company, Docket Nos. 50-280 and 50-281, Surry Power Station, Unit Nos. 1 and 2, Surry County, Virginia

Date of amendment requests: May 22, 1987, superseding requests dated April 12, 1985, September 9, 1985, October 31, 1985 and September 25, 1986

Description of amendment requests: The amendments propose changes to Section 3.7, Instrumentation Systems, and Section 4.1, Operational Safety Review, of the Technical Specifications (TS) for Surry Units 1 and 2. Portions of the proposed changes are part of the licensee's response to Generic Letter 83-28, Item 4.5.3, and address the surveillance intervals for on-line functional testing of the reactor trip system instrumentation. Virginia Electric and Power Company (the licensee) stated that these changes are consistent with WCAP-10271, "Evaluation of Surveillance Frequencies and Out-of-Service Times for Reactor Protection Instrumentation System" and the associated NRC Safety Evaluations dated February 21, 1985, and July 24, 1985. These documents concluded that the estimated change in reactor protection system unavailability is very small as is the estimated reduction in core damage frequency coming from inadvertent trips and that the change in core damage frequency and risk is insignificant. Other proposed changes will provide greater consistency with the Westinghouse Standard Technical Specifications (STS).

This amendment request also incorporates changes for the reactor trip system proposed in previous amendment requests dated April 12, 1985 and September 9, 1985, noticed on May 21, 1985 (50 FR 20995), and December 18, 1985 (50 FR 51634), respectively. Both of these submittals are superseded by this request.

A description of the changes to each section is provided below:

Section 3.7

Specification 3.7.B will be divided into 3.7.B.1 and 3.7.B.2 with 3.7.B.1 covering reactor trip system instrumentation channels (TS Table 3.7-1) and 3.7.B.2 covering engineered safeguards action instrumentation (TS Table 3.7-2) and the instrument operating conditions for isolation functions (TS Table 3.7-3). This change is necessary because TS Table 3.7-1 will be revised and reformatted, and Specification 3.7.B will no longer be applicable to TS Table 3.7-1. Similarly, Specification 3.7.C will be changed to be consistent with the changes proposed to Specification 3.7.B.

The number of minimum operable channels for 1 of 2 logic Reactor Protection System (RPS) channels will be changed from one (1) to two (2). The affected channels include manual reactor trip, nuclear flux intermediate and source ranges, and low steam generator water level coincident with steam/feedwater flow mismatch. These changes are proposed in order to be consistent with the design philosophy presented in the Surry Power Station Updated Final Safety Analysis Report (UFSAR). These changes represent more stringent operability requirements for these instrumentation channels.

On page 3.7-10, in Functional Unit 4, notes will be added for the nuclear flux source range reactor trip in order to clarify the operability requirement for that instrumentation channel. The notes are consistent with the guidance provided in Section 3/4.3.1 of NUREG-0452, Revision 4, "Standard Technical Specifications for Westinghouse Pressurized Water Reactors" (W-STS) for the nuclear flux source range reactor trip.

On page 3.7-11, the minimum operable channel requirement for the low flow reactor trip and low-low steam generator water level reactor trip will be modified in order to clarify the requirement in accordance with the guidance provided in Section 3/4.3.1 of W-STS for the low flow reactor trip and

low-low steam generator water level reactor trip.

The turbine trip function will be subdivided into its component parts. This proposed change will provide clarification for the turbine trip/RPS interface and would be made in accordance with the guidance provided in the model Technical Specifications enclosed with the letter from Mr. H. R. Denton (NRC) to Mr. L. D. Butterfield (Westinghouse Owners Group) dated July 24, 1985, for the turbine trip. It should be noted that the entry under "Operator Action" for "Stop Valve Closure" should be "12" in lieu of "11." This is a typographical error.

The safety injection function will be changed from referencing the initiating signals for safety injection to specifying the logic that makes up the safety injection/RPS interface. This proposed change will provide clarification of the actual interface between the safety injection actuation system and the RPS and would be made in accordance with the guidance provided in Section 3/4.3.1 of W-STS for the safety injection input from the ESF reactor trip.

A limiting condition of operation for the reactor coolant pump breaker position will be added to TS Table 3.7-1. The position of the reactor coolant pump breaker is an input into the RPS as described in Section 7.2 of the UFSAR and should be included with the other reactor trip instruments. The operability requirements for this trip channel have been established in accordance with the guidance provided in Section 3/4.3.1 of W-STS for the reactor coolant pump breaker position trip.

The control rod misalignment monitor will be deleted from TS Table 3.7-1 because it is not part of the reactor trip instrumentation and does not provide a reactor trip signal. The TS have requirements on flux tilt and rod misalignment, and the control rod misalignment monitor is not assumed to operate in order to mitigate the consequences of any accident.

TS Table 3.7-1, Reactor Trip Instrument Operating Conditions, would be reformatted to be consistent with the format used in Section 3/4.3.1 of W-STS. More specifically, for each functional unit column entries would be added for the "Total Number of Channels," "Channels to Trip," and specific "Operator Action." The column for "Degree of Redundancy" will be deleted from the table. The times for testing and maintenance that are in the action statements have been established in accordance with the guidance provided in WCAP-10271, "Evaluation of Surveillance Frequencies and Out-of-Service Times for the Reactor Protection Instrumentation System," including Supplement 1, portions of which have been approved in NRC's Safety Evaluation issued by a letter from Mr. C. O. Thomas (NRC) to Mr. J. J. Sheppard (Westinghouse Owners Group) dated February 21, 1985.

The changes to the operability requirements for the reactor trip breakers, the reactor trip bypass breakers and the automatic trip logic provide clarification for operation and testing of the reactor trip breakers, reactor trip bypass breakers and automatic trip logic. More specific guidance will be provided in the action statements for these items that address the time allowed for testing and maintenance. Currently, there are no restrictions on time for maintenance and testing of reactor trip breakers, reactor bypass breakers and the automatic trip logic included in the Surry TS. Therefore, the proposed limiting conditions for operation and action statements are more conservative than existing TS requirements. These changes are modeled after the NRC staff guidance provided in Generic Letter 85-09, "Technical Specification for Generic Letter 83-28, Item 4.3," and Westinghouse WCAP-10271.

Section 4.1

Specification 4.1.A.2 would be added which defines the surveillance requirements for the logic for the reactor trip system interlocks and the interlock function. A page number would also be changed to correct a typographical error. Additionally, TS Table 4.1-A will be added to this section of the TS. This table describes the reactor trip system interlocks and is based on information contained in Section 7.2 of the UFSAR.

The surveillance requirements listed in TS Table 4.1-1, Minimum Frequencies for Check, Calibrations, and Test of Instrument Channels, for the nuclear power range, nuclear intermediate range, nuclear source range, 4 KV voltage and frequency, reactor coolant temperature and turbine trip will be modified in accordance with the guidance provided in Section 3/4.3.1 of Mr. Denton's letter dated July 24, 1985, for these instrument channels. This includes the addition of a note which allows exclusion of the neutron detectors from channel calibration of the nuclear power, intermediate and source ranges.

Surveillance requirements have been added to TS Table 4.1-1 for the following channels: safety injection input from ESF, reactor coolant pump breaker position trip, and steam/feedwater flow mismatch coincident with low steam generator water level. The surveillance requirements for these channels have been established based on the guidance provided in Section 3/4.3.1 of W-STS.

The surveillance requirements for the reactor trip breaker, the manual reactor trip, and the reactor bypass breaker are modeled after Generic Letter 85-09 and provide for independent testing of the shunt and undervoltage trip devices. In addition, a limiting condition for operation will be added to allow reactor operation for up to 48 hours with either the undervoltage or shunt trip device of the reactor trip breaker inoperable.

Functional Unit 16 was deleted from Table 4.1-1 by Amendment 103. As a result, functional units following old Functional Unit 16 in Table 4.1-1 would be renumbered to reflect this deletion.

The entries for "weekly," "semiannually," "every two weeks," and "after each startup" will be deleted from the listing of defined abbreviations in TS Table 4.1-1 because they are no longer used in the table.

The pages for TS Table 4.1-1(a), Radioactive Liquid Effluent Monitoring Instrumentation Surveillance Requirements, and TS Table 4.1-1(b), Radioactive Gaseous Effluent Monitoring Instrumentation Surveillance Requirements, will be renumbered so that the page numbering in this section will run consecutively.

Page TS 4.1-9 will be deleted, because all of the information on that page duplicates information that is contained in other portions of TS Table 4.1-1.

Basis for proposed no significant hazards consideration determination: The Commission has provided standards in 10 CFR 50.92(c) for determining whether a significant hazards consideration exists. A proposed amendment to an operating license for a facility involves no significant hazards consideration if operation of the facility in accordance with the proposed amendment would not (1) involve a significant increase in the probability or consequences of an accident previously evaluated; (2) create the possibility of a new or different kind of accident from any accident previously evaluated; or (3) involve a significant reduction in a margin of safety.

The proposed changes by the licensee can be divided in three broad categories: (1) editorial changes, (2) changes which provide added conservatism, and (3) changes based on WCAP-10271 which have been reviewed and approved by the staff.

(1) The nature of the changes covered by first two categories does not significantly increase probability of occurrence or consequences of an accident previously evaluated. The changes involved in third category have

been evaluated in WCAP-10271 and the NRC's Safety Evaluations dated February 21, 1985 and July 24, 1985. The changes involving the reactor trip system affect the probability or consequences of a wide range of accidents which require the actuation of the reactor trip signal. WCAP-10271 and the staff's review of WCAP-10271 have verified that the effect of the proposed changes would not be significant. In the staff's Safety Evaluation dated February 21, 1985, the staff evaluated the changes affecting Reactor Trip Systems' (RTS) analog channels and concluded that the estimated change in reactor trip system unavailability from the proposed changes was very small, and the resulting changes in core damage frequency and risk were quite small compared to the error in the probabilistic estimate. Based on the above evaluation, by letter dated July 24, 1985, the staff provided a marked-up copy of the affected technical specifications as guidelines for licensees to prepare plant-specific proposals for technical specification changes. Thus, these changes are approved and recommended by the staff for implementation. The proposed changes do not alter the manner in which protection is afforded. Thus, the proposed changes do not involve a significant increase in the probability or consequences of an accident previously evaluated.

(2) The proposed changes only affect previously analyzed accidents and do not involve any physical plant alterations which would introduce any new or unique operational modes or accident precursors. Thus, the proposed changes do not create the possibility of a new or different kind of accident from any accident previously evaluated.

(3) As discussed earlier, the changes do not significantly affect a margin of safety. The changes affecting the reactor protection system outage time have been evaluated by the staff in a Safety Evaluation dated February 21, 1985, which concluded that the changes in estimated core damage frequency and risk are insignificant. Therefore, the proposed changes do not involve a significant reduction in a margin of safety.

In addition, the Commission has provided examples of changes that constitute no significant hazards consideration in the **Federal Register**, Volume 51, page 7751. Example (i) is a purely administrative change to the Technical Specifications; for example, a change to achieve consistency throughout the Technical Specifications, correction of an error, or a change in nomenclature. Example (ii) is a change that constitutes an additional limitation, restriction, or control not presently included in the Technical Specifications; for example, a more stringent surveillance requirement.

The proposed changes that reformat TS Table 3.7-1 and renumber the pages that contain TS Table 4.1-1(a) and TS Table 4.1-1(b) are similar to example (i) in that they do not modify any technical requirement and will foster document consistency.

The proposed changes to the operability requirements for the manual reactor trip, the nuclear flux intermediate range reactor trip, the nuclear source range reactor trip, the low steam generator water level with steam/feedwater flow mismatch reactor trip, the reactor trip breakers, the reactor trip bypass breaker, the automatic trip logic, and the addition of the requirements for the reactor coolant pump breaker position trip in TS Table 3.7-1 are similar to example (ii) in that they constitute either new or additional requirements. The proposed changes that address the surveillance requirements for the manual reactor trip, the reactor trip bypass breakers, the safety injection input from ESF, the reactor coolant pump breaker position trip, and the low steam generator water level with steam/feedwater flow mismatch reactor trip in TS Table 4.1-1 are similar to example (ii) in that they constitute additional requirements.

Therefore, based on the above discussion, the staff proposes to determine that the proposed changes involve no significant hazards considerations.

Local Public Document Room location: Swem Library, College of William and Mary, Williamsburg, Virginia 23185.

Attorney for licensee: Mr. Michael W. Maupin, Hunton and Williams, Post Office Box 1535, Richmond, Virginia 23213.

NRC Project Director: Herbert N. Berkow

Virginia Electric and Power Company, Docket Nos. 50-280 and 50-281, Surry Power Station, Unit Nos. 1 and 2, Surry County, Virginia

Date of amendment request: May 29, 1987

Description of amendment request: The proposed amendments would revise Table 3.21-1 of the Surry Technical Specifications, Fire Detection Instruments, by adding two additional smoke detectors to the listing for the auxiliary building general area. The total number shown would increase from 12 to 14. These smoke detectors were added to satisfy the requirements of 10 CFR Part 50, Appendix R, to provide fire detection capabilities in the auxiliary building in the vicinity of the charging pump cooling water pumps.

Basis for proposed no significant hazards consideration determination: The Commission has provided standards in 10 CFR 50.92(c) for determining whether a significant hazards consideration exists. A proposed amendment to an operating license for a facility involves no significant hazards consideration if operation of the facility in accordance with the proposed amendment would not: (1) involve a significant increase in the probability or consequences of an accident previously evaluated; or (2) create the possibility of a new or different kind of accident from any accident previously evaluated; or (3) involve a significant reduction in a margin of safety.

The licensee has evaluated the change against the standards provided above and has determined that the change would involve no significant hazards consideration because:

1. The change enhances the ability to detect fires in the auxiliary building and limit their consequences. Thus, the proposed change does not increase the probability or consequences of any accident previously evaluated.

2. The change does not modify plant design or system operation that could create a different type of accident. Therefore, the proposed change does not create the possibility of a new or different kind of accident than previously evaluated.

3. The addition of two smoke detectors would increase safety by providing additional detection capability. Thus, it would not reduce a margin of safety.

The staff agrees with the licensee's analysis of the three standards and proposes to determine that the proposed amendments do not involve a significant hazards consideration.

Local Public Document Room location: Swem Library, College of William and Mary, Williamsburg, Virginia 23185.

Attorney for licensee: Mr. Michael W. Maupin, Hunton and Williams, Post Office Box 1535, Richmond, Virginia 23213.

NRC Project Director: Herbert N. Berkow

PREVIOUSLY PUBLISHED NOTICES OF CONSIDERATION OF ISSUANCE OF AMENDMENTS TO OPERATING LICENSES AND PROPOSED NO SIGNIFICANT HAZARDS CONSIDERATION DETERMINATION AND OPPORTUNITY FOR HEARING

The following notices were previously published as separate individual notices. The notice content was the same as above. They were published as individual notices because time did not allow the Commission to wait for this bi-weekly notice. They are repeated here because the bi-weekly notice lists all amendments proposed to be issued involving no significant hazards consideration.

For details, see the individual notice in the **Federal Register** on the day and page cited. This notice does not extend the notice period of the original notice.

Florida Power and Light Company, Docket No. 50-335, St. Lucie Plant, Unit No. 1, St. Lucie County, Florida

Date of amendment request: June 12, 1987

Brief description of amendment request: The amendment would allow the licensee to increase the spent fuel pool storage capacity from 728 to 1706 fuel assemblies for St. Lucie Unit No. 1.

Date of publication of individual notice in the **Federal Register:** August 31, 1987 (52 FR 32852)

Expiration date of individual notice: September 30, 1987

Local Public Document Room location: Indian River Junior College Library, 3209 Virginia Avenue, Fort Pierce, Florida 33450

NOTICE OF ISSUANCE OF AMENDMENT TO FACILITY OPERATING LICENSE

During the period since publication of the last bi-weekly notice, the Commission has issued the following amendments. The Commission has determined for each of these amendments that the application complies with the standards and requirements of the Atomic Energy Act of 1954, as amended (the Act), and the Commission's rules and regulations. The Commission has made appropriate findings as required by the Act and the Commission's rules and regulations in 10 CFR Chapter I, which are set forth in the license amendment.

Notice of Consideration of Issuance of Amendment to Facility Operating License and Proposed No Significant Hazards Consideration Determination and Opportunity for Hearing in connection with these actions was published in the **Federal Register** as indicated. No request for a hearing or petition for leave to intervene was filed following this notice.

Unless otherwise indicated, the Commission has determined that these amendments satisfy the criteria for categorical exclusion in accordance with 10 CFR 51.22. Therefore, pursuant to 10 CFR 51.22(b), no environmental impact statement or environmental assessment need be prepared for these amendments. If the Commission has prepared an environmental assessment under the special circumstances provision in 10 CFR 51.12(b) and has made a determination based on that assessment, it is so indicated.

For further details with respect to the action see (1) the applications for amendments, (2) the amendments, and (3) the Commission's related letters, Safety Evaluations and/or Environmental Assessments as indicated. All of these items are available for public inspection at the Commission's Public Document Room, 1717 H Street, NW., Washington, DC, and at the local public document rooms for the particular facilities involved. A copy of items (2) and (3) may be obtained upon request addressed to the U.S. Nuclear Regulatory Commission, Washington, DC 20555, Attention: Director, Division of Licensing.

Arizona Public Service Company, et al, Docket Nos. STN 50-528 and STN 50-529, Palo Verde Nuclear Generating Station, Units 1 and 2, Maricopa County, Arizona

Date of application for amendments: June 24, 1987.

Brief description of amendments: The amendments revised the technical specifications by changing the level required for the Condensate Storage Tank from 23 feet to an indicated level of 25 feet.

Date of issuance: September 4, 1987

Effective date: September 4, 1987

Amendment Nos.: 20 and 11

Facility Operating License Nos. NPF-41 and NPF-51: Amendments change technical specifications.

Date of initial notice in **Federal Register:** July 29, 1987 (52 FR 8371). The Commission's related evaluation of the amendments is contained in a Safety Evaluation dated September 4, 1987

No significant hazards consideration comments received: No.

Local Public Document Room location: Phoenix Public Library, Business and Science Division, 12 East McDowell Road, Phoenix, Arizona 85004.

Arizona Public Service Company, et al, Docket No. STN 50-528, Palo Verde Nuclear Generating Station, Unit 1, Maricopa County, Arizona

Date of applications for amendment: May 11 and 28, 1987.

Brief description of amendment: The amendment revised the technical specifications relating to (1) the applicable modes for allowing changes to the trip setpoints for low pressure in the steam generator and pressurizer, (2) the definition of an operable incore detection system, and (3) the required boration flow rate.

Date of issuance: September 4, 1987

Effective date: September 4, 1987

Amendment No.: 21

Facility Operating License No. NPF-41: Amendment changes technical specifications.

Date of initial notice in **Federal Register:** July 15, 1987 (52 FR 26583) and July 29, 1987 (52 FR 28370). The Commission's related evaluation of the amendment is contained in a Safety Evaluation dated September 4, 1987

No significant hazards consideration comments received: No.

Local Public Document Room location: Phoenix Public Library, Business and Science Division, 12 East McDowell Road, Phoenix, Arizona 85004.

Boston Edison Company Docket No. 50-293, Pilgrim Nuclear Power Station, Plymouth County, Massachusetts

Date of application for amendment: May 22, 1987, as supplemented on July 22, 1987.

Brief description of amendment: The amendment revises the Technical Specifications for Cycle 8 operation of the nuclear reactor following core reload 7. For the first time, only retrofit fuel will be loaded into the core. All non-retrofit fuel will be discharged to the spent fuel pool. The proposed Technical Specification changes are: (1) removing reference to the non-retrofit 8x8 fuel; (2) revising the description of low and low-low reactor water level setpoints to reflect the change in height of the top of the active fuel length; (3) slightly reducing the operating limit minimum critical power ratio to permit operational flexibility; and (4) several editorial changes to correct the spelling of "MFLPD"; identify the unit of measure as megawatt days per standard ton, and include a reference which had been inadvertently deleted.

Date of issuance: August 31, 1987

Effective date: August 31, 1987

Amendment No.: 105

Facility Operating License No. DPR-35: Amendment revised the Technical Specifications.

Date of initial notice in **Federal Register:** July 15, 1987 (52 FR 26583) The Commission's related evaluation of the amendment is contained in a Safety Evaluation dated August 31, 1987.

No signifigant hazards consideration comments received: No.

Local Public Document Room location: Plymouth Public Library, 11 North Street, Plymouth, Massachusetts 02360.

Boston Edison Company Docket No. 50-293, Pilgrim Nuclear Power Station, Plymouth County, Massachusetts

Date of application for amendment: May 20, 1987.

Brief Description of amendment: Change the Technical Specifications to add a timer to the automatic depressurization system (ADS).

Date of issuance: September 4, 1987

Effective date: 30 days from date of issuance

Amendment No.: 106

Facility Operating License No. DPR-35: Amendment revised the Technical Specifications.

Date of initial notice in **Federal Register:** July 29, 1987 (51 FR 28371). The Commission's related evaluation of the amendment is contained in a Safety Evaluation dated September 4, 1987.

No significant hazards consideration comments received: No.

Local Public Document Room location: Plymouth Public Library, 11 North Street, Plymouth, Massachusetts 02360.

Consolidated Edison Company of New York, Docket No. 50-247, Indian Point Nuclear Generating Unit No. 2, Westchester County, New York

Date of application for amendment: May 29, 1987

Brief description of amendment: The amendment revises the Technical Specifications to permit a one-time extension of the surveillance interval limits for various systems and components. Specifically the Technical Specifications are modified to extend the 3.25 total time interval limit over three consecutive surveillance intervals to allow testing to be performed during the scheduled 1987 refueling/maintenance outage rather than requiring a special plant shutdown solely to perform these tests.

Date of issuance: September 1, 1987

Effective date: September 1, 1987

Amendment No.: 122

Facility Operating License No. DPR-26: Amendment revised the Technical Specifications.

Date of initial notice in **Federal Register:** July 29, 1987 (52 FR 28374) The Commission's related evaluation of the amendment is contained in a Safety Evaluation dated September 1, 1987.

No significant hazards consideration comments received: No

Local Public Document Room location: White Plains Public Library, 100 Martine Avenue, White Plains, New York, 10610.

Consolidated Edison Company of New York, Docket Nos. 50-03 and 50-247, Indian Point Nuclear Generating Unit Nos. 1 and 2, Westchester County, New York

Date of application for amendment: November 26, 1986

Brief description of amendment: The amendments revise the Technical Specifications for Indian Point Unit Nos. 1 and 2 to incorporate changes to the Facility Organization. The amendments revise the organizational figures contained in the Technical Specifications and revise the affected titles of the members of the Station Nuclear Safety Committee.

Date of issuance: September 2, 1987

Effective date: September 2, 1987

Amendment Nos.: 36, 123.

Facility Operating License Nos. DPR-5 and 26: Amendment revised the Technical Specifications.

Date of initial notice in **Federal Register:** February 11, 1987 (52 FR 4407) The Commission's related evaluation of the amendments is contained in a Safety Evaluation dated September 2, 1987.

No significant hazards consideration comments received: No

Local Public Document Room location: White Plains Public Library, 100 Martine Avenue, White Plains, New York, 10610.

Consumers Power Company, Docket No. 50-255, Palisades Plant, Van Buren County, Michigan

Date of application for amendment: September 28, 1984, as supplemented June 5, 1987

Brief description of amendment: This amendment changes the Technical Specification requirement for steam generator inspection interval by allowing an extension from the limit of 24 months to 30 months provided that the mean degradation increase for the previous steam generator inspection interval was less than one percent.

Date of issuance: August 26, 1987

Effective date: August 26, 1987

Amendment No. 106

Provisional Operating License No. DPR-20. This amendment revised the Technical Specifications.

Date of initial notice in **Federal Register:** September 28, 1984 (50 FR 20975) and July 1, 1987 (52 FR 24546). The Commission's related evaluation of the amendment is contained in a Safety Evaluation dated August 26, 1987.

No significant hazards consideration comments received: No.

Local Public Document Room location: Van Zoeren Library, Hope College, Holland, Michigan 49423.

Duke Power Company, Docket Nos. 50-369 and 50-370, McGuire Nuclear Station, Units 1 and 2, Mecklenburg County, North Carolina

Date of application for amendments: December 7, 1985, as supplemented March 16 and April 1, 1987

Brief description of amendments: The amendments change the Technical Specifications to add requirements for testing of the undervoltage and shunt trip attachments of reactor trip breakers and testing of reactor trip bypass breakers.

Date of issuance: September 2, 1987

Effective date: September 2, 1987

Amendment Nos.: 74 and 55

Facility Operating License Nos. NPF-9 and NPF-17. Amendments revised the Technical Specifications.

Dates of initial notices in **Federal Register:** June 18, 1986 (51 FR 22234) and April 22, 1987 (52 FR 13336) The Commission's related evaluation of the amendment is contained in a Safety Evaluation dated September 2, 1987.

No significant hazards consideration comments received: No

Local Public Document Room location: Atkins Library, University of North Carolina, Charlotte (UNCC) Station, North Carolina 28223

Duke Power Company, Docket Nos. 50-369 and 50-370, McGuire Nuclear Station, Units 1 and 2, Mecklenburg County, North Carolina

Date of application for amendments: July 2, 1987 as supplemented August 26, 1987

Brief description of amendments: The amendments modified the Technical Specifications to incorporate the ventilation system of the Equipment Staging Building as a new gaseous effluent release point, to specify the limiting conditions for operation and surveillance requirements for this ventilation system and its monitoring instrumentation, and to add associated requirements to the gaseous waste sampling and analysis program.

Date of issuance: September 9, 1987

Effective date: September 9, 1987

Amendment Nos.: 75 and 56

Facility Operating License Nos. NPF-9 and NPF-17. Amendments revised the Technical Specifications.

Date of initial notice in **Federal Register:** July 31, 1986 (52 FR 28624) The Commission's related evaluation of the amendments is contained in a Safety Evaluation dated September 9, 1987.

No significant hazards consideration comments received: No

Local Public Document Room location: Atkins Library, University of North Carolina, Charlotte (UNCC Station), North Carolina 28223

Duke Power Company, Docket Nos. 50-269, 50-270, and 50-287, Oconee Nuclear Station, Units 1, 2, and 3, Oconee County, South Carolina

Date of application for amendments: January 16, 1986, as supplemented April 18, June 27, and September 15, 1986, and April 3, 1987

Brief description of amendments: The amendments modify the Technical Specifications to allow repairing of steam generator tubes by sleeving.

Date of Issuance: September 1, 1987

Effective date: September 1, 1987

Amendment Nos.: 161, 161, and 158

Facility Operating Licenses Nos. DPR-38, DPR-47, and DPR-55. Amendments revised the Technical Specifications.

Date of initial notice in **Federal Register:** April 9, 1986 (51 FR 12227) The Commission's related evaluation of the amendments is contained in a Safety Evaluation dated September 1, 1987.

No significant hazards consideration comments received: No

Local Public Document Room location: Oconee County Library, 501 West Southbroad Street, Walhalla, South Carolina 29691

Duquesne Light Company, Docket No. 50-334, Beaver Valley Power Station, Unit No. 1, Shippingport, Pennsylvania

Date of application for amendment: October 29, 1986 and supplemented by letter dated June 2, 1987

Brief description of amendment: The amendment changed the Technical Specifications for Beaver Valley Unit No. 1 to specify actions to be taken if a pressurizer safety valve discharged liquid water due to an overpressure event, and to specify new surveillance requirements of these valves.

Date of issuance: September 8, 1987

Effective date: September 8, 1987

Amendment No. 115

Facility Operating License No. DPR-66. Amendment revised the Technical Specifications.

Date of initial notice in **Federal Register:** December 17, 1986 (51 FR 45199) and July 29, 1987 (52 FR 28376) The Commission's related evaluation of the amendment is contained in a Safety Evaluation dated September 8, 1987.

No significant hazards consideration comments received: No

Local Public Document Room location: B. F. Jones Memorial Library, 663 Franklin Avenue, Aliquippa, Pennsylvania 15001.

Georgia Power Company, Oglethorpe Power Corporation, Municipal Electric Authority of Georgia, City of Dalton, Georgia, Docket No. 50-366, Edwin I. Hatch Nuclear Plant, Unit 2, Appling County, Georgia

Date of application for amendment: September 27, 1982, as supplemented December 7, 1983, May 4, 1984, December 18, 1985, April 4, 1986, and January 5, 1987.

Brief description of amendment: The amendment revised the Technical Specifications to delete Section 3.7.8 related to settlement of Class I structures.

Date of issuance: August 31, 1987

Effective date: August 31, 1987

Amendment No.: 84

Facility Operating License No. NPF-5. Amendment revised the Technical Specifications.

Date of initial notice in **Federal Register:** November 22, 1983 (48 FR 52812) and July 29, 1987 (52 FR 28376) The Commission's related evaluation of the amendment is contained in a Safety Evaluation dated August 31, 1987.

No significant hazards consideration comments received: No

Local Public Document Room location: Appling County Public Library, 301 City Hall Drive, Baxley, Georgia 31513

Gulf States Utilities Company, Docket No. 50-458, River Bend Station, Unit 1 West Feliciana Parish, Louisiana

Date of application for amendment: May 11, 1987 as supplemented July 27, 1987.

Brief description of amendment: This amendment authorizes a one-time extension to the surveillance interval for the penetration valve leakage control system until the first refueling outage scheduled to begin September 15, 1987.

Date of issuance: August 31, 1987.

Effective date: August 31, 1987.

Amendment No. 10

Facility Operating License No. NPF-47. This amendment revised the Technical Specifications.

Date of initial notice in **Federal Register:** July 1, 1985 (52 FR 24552) The licensee's July 27, 1987 submittal provided editorial changes to the May 11, 1987 submittal and did not alter the NRC staff's determination of no significant hazards as published in the **Federal Register.** The Commission's related evaluation of the amendment is contained in a Safety Evaluation dated August 31, 1987.

No significant hazards consideration comments received: No

Local Public Document Room location: Government Documents Department, Louisiana State University, Baton Rouge, Louisiana 70803

GPU Nuclear Corporation, et al., Docket No. 50-289, Three Mile Island Nuclear Station, Unit No. 1, Dauphin County, Pennsylvania

Date of application for amendment: June 18, 1987

Brief description of amendment: Changed the administrative section of the Technical Specifications to realign functional responsibilities in the GPU Nuclear corporate organization.

Date of Issuance: September 1, 1987

Effective date: September 1, 1987

Amendment No.: 132

Facility Operating License No. DPR-50. Amendment revised the Technical Specifications.

Date of initial notice in **Federal Register:** July 29, 1987 (52 FR 28377) The Commission's related evaluation of this amendment is contained in a Safety Evaluation dated September 1, 1987.

No significant hazards consideration comments received: No.

Local Public Document Room location: Government Publications Section, State Library of Pennsylvania, Education Building, Commonwealth and Walnut Streets, Harrisburg, Pennsylvania, 17126

Nebraska Public Power District, Docket No. 50-298, Cooper Nuclear Station, Nemaha County, Nebraska

Date of amendment request: November 24, 1986, as modified by letter dated August 13, 1987.

Brief description of amendment: The amendment clarifies Appendix A Technical Specifications relating to reactor water chemistry requirements and retention of training records for plant staff members. It also corrected an error made in Amendment No. 62.

Date of issuance: August 31, 1987.

Effective date: August 31, 1987.

Amendment No.: 109

Facility Operating License No. DPR-62. Amendment revised the Technical Specifications.

Date of initial notice in **Federal Register:** February 11, 1987 (52 FR 4412). The August 13, 1987 submittal provided additional clarifying information and did not change the finding of the initial notice. The Commission's related

evaluation of the amendment is contained in a Safety Evaluation dated August 31, 1987.

No significant hazards consideration comments received: No.

Local Public Document Room location: Auburn Public Library, 118 15th Street, Auburn, Nebraska 68305.

Niagara Mohawk Power Corporation, Docket No. 50-220, Nine Mile Point Nuclear Station, Unit No. 1, Oswego County, New York

Date of application for amendment: February 20, 1987

Brief description of amendment: The amendment modifies Technical Specification (TS) Figure 6.2-2 to make the organization chart more consistent with that for Nine Mile Point Nuclear Station Unit 2, and Section 6.3 to include the qualifications requirements for the new position of Radiation Protection Manager.

Date of issuance: August 27, 1987

Effective date: August 27, 1987

Amendment No.: 93

Facility Operating License No. DPR-63: Amendment revises the Technical Specifications.

Date of initial notice in **Federal Register:** April 8, 1987 (52 FR 11367) The Commission's related evaluation of the amendment is contained in a Safety Evaluation dated August 27, 1987.

No significant hazards consideration comments received: No

Local Public Document Room location: State University of New York, Penfield Library, Reference and Documents Department, Oswego, New York 13126.

Northeast Nuclear Energy Company, et al., Docket No. 50-245, Millstone Nuclear Power Station, Unit No. 1, New London County, Connecticut

Date of application for amendment: May 12, 1987

Brief description of amendment: Revision of pressure-temperature limits in Technical Specification Section 3.6 to reflect the results of testing the materials in surveillance capsule 2. The revised limits meet the requirements of Appendix G to 10 CFR Part 50 and are valid until 16 effective full power years of operation.

Date of issuance: August 20, 1987

Effective date: August 20, 1987

Amendment No. 9.

Facility Operating License No. DPR-21. This amendment revised the technical specifications.

Date of initial notice in **Federal Register:** June 3, 1987 (52 FR 20803). The Commission's related evaluation of the amendment is contained in a Safety Evaluation dated August 20, 1987.

No significant hazards consideration comments received: No.

Local Public Document Room location: Waterford Public Library, 49 Rope Ferry Road, Waterford, Connecticut 06385.

Northeast Nuclear Energy Company, et al., Docket No. 50-336, Millstone Nuclear Power Station Unit No. 2, Town of Waterford, Connecticut

Date of application for amendment: June 25, 1987 (partial response)

Brief description of amendment: The change modified the Technical Specifications (TS) as follows: (1) the TS Table that explicitly lists the snubbers that are required to be operable and undergo surveillance is eliminated and (2) the TS numbering system for TS 3/4.7.8.1 is changed. The third proposed change to the snubber TS, which would allow the licensee to perform an engineering evaluation to determine a snubber supported system/component to be operable with an inoperable snubber, will be addressed in future correspondence.

Date of issuance: September 1, 1987

Effective date: September 1, 1987

Amendment No.: 118

Facility Operating License No. DPR-65. Amendment revised the Technical Specifications.

Date of initial notice in **Federal Register:** July 15, 1987 (52 FR 26591) The Commission's related evaluation of the amendment is contained in a Safety Evaluation dated September 1, 1987.

No significant hazards consideration comments received: No.

Local Public Document Room location: Waterford Public Library, Rope Ferry Road, Waterford, Connecticut.

Omaha Public Power District, Docket No. 50-285, Fort Calhoun Station, Unit No. 1, Washington County, Nebraska

Date of amendment request: August 5, 1986, as supplemented on November 24, 1986, April 15, June 22 and July 1, 1987.

Brief description of amendment: The amendment revised the Technical Specifications by adding Inadequate Core Cooling Instrumentation which is required by Item II.F.2 of NUREG-0737.

Date of issuance: August 31, 1987.

Effective date: 60 days from the date of issuance.

Amendment No.: 110

Facility Operating License No. DPR-40. Amendment revised the Technical Specifications.

Date of initial notice in **Federal Register:** September 10, 1986 (51 FR 32278). Since the date of the initial notice, the licensee submitted clarifying information dated November 24, 1986, April 15, June 22 and July 1, 1987. This information was substantial enough to warrant renoticing of the requested amendment on July 29, 1987 (52 FR 28382). The Commission's related evaluation of the amendment is contained in a Safety Evaluation dated August 31, 1987.

No significant hazards consideration comments received: No.

Local Public Document Room location: W. Dale Clark Library, 215 South 15th Street, Omaha, Nebraska 68102

Pacific Gas and Electric Company, Docket Nos. 50-275 and 50-323, Diablo Canyon Nuclear Power Plant, Unit Nos. 1 and 2, San Luis Obispo County, California

Date of application for amendments: October 29, 1986

Brief description of amendments: The amendments change the reporting requirements for iodine spiking events and delete the requirement to shut down the reactor after accumulating 800 hours of out-of-specification dose equivalent I-131 activity, both in response to NRC Generic Letter No. 85-19, dated September 27, 1985.

Date of Issuance: August 31, 1987

Effective date: August 31, 1987

Amendment Nos: 18 and 17

Facility Operating Licenses Nos. DPR-80 and DPR-82: Amendments revised the Technical Specifications.

Date of initial notice in **Federal Register:** July 29, 1987 (52 FR 28383) The Commission's related evaluation of the amendments is contained in a Safety Evaluation dated August 31, 1987.

No significant hazards consideration comments received: No

Local Public Document Room location: California Polytechnic State University Library, Government Documents and Maps Department, San Luis Obispo, California 93407

Pacific Gas and Electric Company, Docket Nos. 50-275 and 50-323, Diablo Canyon Nuclear Power Plant, Unit Nos. 1 and 2, San Luis Obispo County, California

Date of application for amendments: November 5, 1986

Brief description of amendments: The amendments delete the detailed list of containment penetration conductor overcurrent protective devices that are required to be operable. The list will be added to the updated FSAR at the next regular update. The amendment does not alter the requirement that these devices be operable and that they be periodically tested.

Date of Issuance: September 3, 1987

Effective date: September 3, 1987

Amendment Nos: 19 and 18

Facility Operating Licenses Nos. DPR-80 and DPR-82: Amendments revised the Technical Specifications.

Date of initial notice in **Federal Register:** July 29, 1987 (52 FR 28383) The Commission's related evaluation of the amendments is contained in a Safety Evaluation dated September 3, 1987

No significant hazards consideration comments received: No

Local Public Document Room location: California Polytechnic State University Library, Government Documents and Maps Department, San Luis Obispo, California 93407

Pacific Gas and Electric Company, Docket Nos. 50-275 and 50-323, Diablo Canyon Nuclear Power Plant, Unit Nos. 1 and 2, San Luis Obispo County, California

Date of application for amendments: August 14, 1986

Brief description of amendments: The amendments revise the reporting official for the Security Supervisor to the Assistant Plant Manager, Support Services; change the title of the person to whom the Vice President, Nuclear Power Generation reports to President; and require that minutes of the General Office Nuclear Plant Review and Audit Committee meetings be forwarded to the President within 14 working days.

Date of Issuance: September 3, 1987

Effective date: September 3, 1987

Amendment Nos: 20 and 19

Facility Operating Licenses Nos. DPR-80 and DPR-82: Amendments revised the Technical Specifications.

Date of initial notice in **Federal Register:** April 22, 1987 (52 FR 13343) The Commission's related evaluation of the amendments is contained in a Safety Evaluation dated September 3, 1987.

No significant hazards consideration comments received: No

Local Public Document Room location: California Polytechnic State University Library, Government Documents and Maps Department, San Luis Obispo, California 93407

Portland General Electric Company, Docket No. 50-344, Trojan Nuclear Plant, Columbia County, Oregon

Date of application for amendment: February 11, 1987

Brief description of amendment: The amendment (1) revises TS Sections 3/4.4.2, TS 3/4.4.3 and TS 3/4.7.1 by increasing the setpoint tolerance for the pressurizer and main steam safety valves from ±1 percent to ±2 percent, and (2) changes the Bases for TS 3/4.7.1 to correct the value for the main steam system design pressure.

Date of issuance: September 1, 1987

Effective date: September 1, 1987

Amendment No.: 134

Facilities Operating License No. NPF-1: Amendment revised the Technical Specifications.

Date of initial notice in **Federal Register:** May 20, 1987 (52 FR 18986) The Commission's related evaluation of the amendment is contained in a Safety Evaluation dated September 1, 1987

No significant hazards consideration comments received: No.

Local Public Document Room location: Branford Price Millar Library, Portland State University, 731 S. W. Harrison St., Portland Oregon 97207

Public Service Electric & Gas Company, Docket No. 50-354, Hope Creek Generating Station, Salem County, New Jersey

Date of application for amendment: May 1, 1987

Brief description of amendment: The amendment revised the numbering of certain Technical Specification sections.

Date of issuance: September 1, 1987

Effective date: September 1, 1987

Amendment No. 10

Facility Operating License No. NPF-57. This amendment revised the Technical Specifications.

Date of initial notice in **Federal Register:** July 1, 1987 (52 FR 24557) The Commission's related evaluation of the amendment is contained in a Safety Evaluation dated September 1, 1987.

No significant hazards consideration comments received: No

Local Public Document Room location: Pennsville Public Library, 190 S. Broadway, Pennsville, New Jersey 08070

Sacramento Municipal Utility District, Docket No. 50-312, Rancho Seco Nuclear Generating Station, Sacramento County, California,

Date of application for amendment: August 1, 1985, as supplemented November 25, 1985, February 20, 1986 and December 24, 1986. The December 24, 1986 supplement was only for clarification and does not alter staff position.

Brief description of amendment: The amendment revises the technical specifications to add fire protection components in the auxiliary building, Turbine Building and Nuclear Service Electrical Building and clarifies requirements on fire barriers.

Date of Issuance: August 27, 1987

Effective date: August 27, 1987

Amendment No: 85

Facility Operating License No. DPR-54: Amendment revised the Technical Specifications.

Date of initial notice in **Federal Register:** September 24, 1986 (51 FR 33958) The Commission's related evaluation of the amendment is contained in a Safety Evaluation dated August 27, 1987

No significant hazards consideration comments received: No

Local Public Document Room location: Sacramento City-County Library, 828 I Street, Sacramento, California 95814

Tennessee Valley Authority, Dockets Nos. 50-259, 50-260 and 50-296, Browns Ferry Nuclear Plant, Units 1, 2 and 3, Limestone County, Alabama

Date of application for amendments: December 23, 1986 (TS 223)

Brief description of amendments: The amendments revise the Browns Ferry Nuclear Plant (BFN), Units 1, 2, and 3, technical specifications to clarify the surveillance requirements for the Standby Liquid Control System (SLC). The amendments specify the use of demineralized water for testing the minimum pump flow rate and require visual verification of flow when pumping boron solution through the recirculation path.

Specifically, Section 4.4.A.2.b of Units 1, 2, and 3, technical specifications are changed to add two phrases to the current requirement. The first phrase requires the licensee to visually verify flow when pumping boron solution through the recirculation path. The second phrase specifies pumping demineralized water through the SLC test tank instead of borated water through the storage tank to verify flow rate. The requirement to visually verify flow is accomplished by observing turbulence through a sample opening in the top of the SLC solution tank. The change to allow pumping demineralized water from the SLC test tank to verify flow rate is satisfied by observing the rate of level change in the test tank to calculate the minimum pump flow rate.

Date of issuance: August 21, 1987

Effective date: August 21, 1987, and shall be implemented within 60 days.

Amendments Nos.: 136, 132, 107

Facility Operating Licenses Nos. DPR-33, DPR-52 and DPR-68: Amendments revised the Technical Specifications.

Date of initial notice in **Federal Register:** January 28, 1987 (52 FR 2892). The Commission's related evaluation of the amendments is contained in a Safety Evaluation dated August 21, 1987.

No significant hazards consideration comments received: No

Local Public Document Room location: Athens Public Library, South Street, Athens, Alabama 35611.

Tennessee Valley Authority, Docket Nos. 50-327 and 50-328, Sequoyah Nuclear Plant, Units 1 and 2, Hamilton County, Tennessee

Date of application for amendments: April 14, 1987, clarified July 8, 1987 and July 27, 1987 (TS 87-02).

Brief description of amendments: The amendments modify the surveillance requirements for the radiation monitors in the steam generator blowdown and condensate demineralizer lines.

Date of issuance: September 9, 1987

Effective date: September 9, 1987

Amendment Nos.: 57 and 49

Facility Operating Licenses Nos. DPR-77 and DPR-79. Amendments revised the Technical Specifications.

Date of initial notice in **Federal Register:** July 1, 1987 (52 FR 24560) The licensee's July 8 and 27, 1987 letters provided clarifying information which did not change the initial application or the initial no significant hazards consideration determination. Therefore, renoticing was not warranted.

The Commission's related evaluation of the amendment is contained in a Safety Evaluation dated September 9, 1987.

No significant hazards consideration comments received: No

Local Public Document Room location: Chattanooga-Hamilton County Library, 1001 Broad Street, Chattanooga, Tennessee 37402.

Toledo Edison Company and The Cleveland Electric Illuminating Company, Docket No. 50-346, Davis-Besse Nuclear Power Station, Unit No. 1, Ottawa County, Ohio

Date of application for amendment: February 18, 1987

Brief description of amendment: This amendment added to the Technical Specifications (TSs) additional Limiting Conditions for Operation and Surveillance Requirements for the Motor Driven Feedwater Pump System (TS Sections 3.7.1.7 and 4.7.1.7). In addition, a new Section 3/4.7.1.7 was added to the Bases explaining the need for the Motor Driven Feed Pump.

Date of issuance: September 2, 1987

Effective date: September 2, 1987

Amendment No. 103

Facility Operating License No. NPF-3: Amendment revised the Technical Specifications.

Date of initial notice in **Federal Register:** May 20, 1987 (52 FR 18988) The Commission's related evaluation of the amendment is contained in a Safety Evaluation dated September 2, 1987.

No significant hazards consideration comments received: No.

Local Public Document Room location: University of Toledo Library, Documents Department, 2801 Bancroft Avenue, Toledo, Ohio 43606.

Toledo Edison Company and The Cleveland Electric Illuminating Company, Docket No. 50-346, Davis-Besse Nuclear Power Station, Unit No. 1, Ottawa County, Ohio

Date of application for amendment: March 17, 1987

Brief description of amendment: This amendment revises TS Sections 3/4.4.8 and 6.9.1.5 to: (1) change the reporting requirements for primary coolant iodine spikes from a short-term report to an item to be included in the Annual Operating Report, and (2) delete the requirement to shut down the reactor if coolant iodine activity limits are exceeded more than 10 percent of the unit operating time annually. This amendment also makes appropriate changes to Basis Section 3/4.4.8.

Date of issuance: September 8, 1987

Effective date: September 8, 1987

Amendment No. 104

Facility Operating License No. NPF-3. Amendment revised the Technical Specifications.

Date of initial notice in **Federal Register:** May 20, 1987 (52 FR 18988) The Commission's related evaluation of the amendment is contained in a letter to the Toledo Edison Company dated September 8, 1987.

No significant hazards consideration comments received: No.

Local Public Document Room location: University of Toledo Library, Documents Department, 2801 Bancroft Avenue, Toledo, Ohio 43606.

NOTICE OF ISSUANCE OF AMENDMENT TO FACILITY OPERATING LICENSE AND FINAL DETERMINATION OF NO SIGNIFICANT HAZARDS CONSIDERATION AND OPPORTUNITY FOR HEARING (EXIGENT OR EMERGENCY CIRCUMSTANCES)

During the period since publication of the last bi-weekly notice, the Commission has issued the following amendments. The Commission has determined for each of these amendments that the application for the amendment complies with the standards and requirements of the Atomic Energy Act of 1954, as amended (the Act), and the Commission's rules and regulations. The Commission has made appropriate findings as required by the Act and the Commission's rules and regulations in 10 CFR Chapter I, which are set forth in the license amendment.

Because of exigent or emergency circumstances associated with the date the amendment was needed, there was not time for the Commission to publish, for public comment before issuance, its usual 30-day Notice of Consideration of Issuance of Amendment and Proposed No Significant Hazards Consideration Determination and Opportunity for Hearing. For exigent circumstances, the Commission has either issued a **Federal Register** notice providing opportunity for public comment or has used local media to provide notice to the public in the area surrounding a licensee's facility of the licensee's application and of the Commission's proposed determination of no significant hazards consideration. The Commission has provided a reasonable opportunity for the public to comment, using its best efforts to make available to the public means of communication for the public to respond quickly, and in the case of telephone comments, the comments have been recorded or transcribed as appropriate and the licensee has been informed of the public comments.

In circumstances where failure to act in a timely way would have resulted, for example, in derating or shutdown of a nuclear power plant or in prevention of either resumption of operation or of increase in power output up to the plant's licensed power level, the Commission may not have had an opportunity to provide for public comment on its no significant hazards determination. In such case, the license amendment has been issued without opportunity for comment. If there has been some time for public comment but less than 30 days, the Commission may provide an opportunity for public comment. If comments have been requested, it is so stated. In either event, the State has been consulted by telephone whenever possible.

Under its regulations, the Commission may issue and make an amendment immediately effective, notwithstanding the pendency before it of a request for a hearing from any person, in advance of the holding and completion of any required hearing, where it has determined that no significant hazards consideration is involved.

The Commission has applied the standards of 10 CFR 50.92 and has made a final determination that the amendment involves no significant hazards consideration. The basis for this determination is contained in the documents related to this action. Accordingly, the amendments have been issued and made effective as indicated.

Unless otherwise indicated, the Commission has determined that these amendments satisfy the criteria for categorical exclusion in accordance with 10 CFR 51.22. Therefore, pursuant to 10 CFR 51.22(b), no environmental impact statement or environmental assessment need be prepared for these amendments. If the Commission has prepared an environmental assessment under the special circumstances provision in 10 CFR 51.12(b) and has made a determination based on that assessment, it is so indicated.

For further details with respect to the action see (1) the application for amendment, (2) the amendment to Facility Operating License, and (3) the Commission's related letter, Safety Evaluation and/or Environmental Assessment, as indicated. All of these items are available for public inspection at the Commission's Public Document Room, 1717 H Street, NW., Washington, DC, and at the local public document room for the particular facility involved.

A copy of items (2) and (3) may be obtained upon request addressed to the U.S. Nuclear Regulatory Commission, Washington, DC 20555, Attention: Director, Division of Licensing.

The Commission is also offering an opportunity for a hearing with respect to the issuance of the amendments. By October 23, 1987, the licensee may file a request for a hearing with respect to issuance of the amendment to the subject facility operating license and any person whose interest may be affected by this proceeding and who wishes to participate as a party in the proceeding must file a written petition for leave to intervene. Requests for a hearing and petitions for leave to intervene shall be filed in accordance with the Commission's "Rules of Practice for Domestic Licensing Proceedings" in 10 CFR Part 2. If a request for a hearing or petition for leave to intervene is filed by the above date, the Commission or an Atomic Safety and Licensing Board, designated by the Commission or by the Chairman of the Atomic Safety and Licensing Board Panel, will rule on the request and/or petition and the Secretary or the designated Atomic Safety and Licensing Board will issue a notice of hearing or an appropriate order.

As required by 10 CFR 2.714, a petition for leave to intervene shall set forth with particularity the interest of the petitioner in the proceeding and how that interest may be affected by the results of the proceeding. The petition should specifically explain the reasons why intervention should be permitted with particular reference to the following factors: (1) the nature of the petitioner's right under the Act to be made a party to the proceeding; (2) the nature and extent of the petitioner's property, financial, or other interest in the proceeding; and (3) the possible effect of any order which may be entered in the proceeding on the petitioner's interest. The petition should also identify the specific aspect(s) of the subject matter of the proceeding as to which petitioner wishes to intervene. Any person who has filed a petition for leave to intervene or who has been admitted as a party may amend the petition without requesting leave of the Board up to fifteen (15) days prior to the first prehearing conference scheduled in the proceeding, but such an amended petition must satisfy the specificity requirements described above.

Not later than fifteen (15) days prior to the first prehearing conference scheduled in the proceeding, a petitioner shall file a supplement to the petition to intervene which must include a list of the contentions which are sought to be litigated in the matter, and the bases for each contention set forth with reasonable specificity. Contentions shall be limited to matters within the scope of the amendment under consideration. A petitioner who fails to file such a supplement which satisfies these requirements with respect to at least one contention will not be permitted to participate as a party.

Those permitted to intervene become parties to the proceeding, subject to any limitations in the order granting leave to intervene, and have the opportunity to participate fully in the conduct of the hearing, including the opportunity to present evidence and cross-examine witnesses.

Since the Commission has made a final determination that the amendment involves no significant hazards consideration, if a hearing is requested, it will not stay the effectiveness of the amendment. Any hearing held would take place while the amendment is in effect.

A request for a hearing or a petition for leave to intervene must be filed with the Secretary of the Commission, U.S. Nuclear Regulatory Commission, Washington, DC 20555, Attention: Docketing and Service Branch, or may be delivered to the Commission's Public Document Room, 1717 H Street, NW., Washington, DC, by the above date. Where petitions are filed during the last ten (10) days of the notice period, it is requested that the petitioner promptly so inform the Commission by a toll-free telephone call to Western Union at (800) 325-6000 (in Missouri (800) 342-6700). The Western Union operator should be given Datagram Identification Number 3737 and the following message addressed to (*Project Director*): petitioner's name and telephone number; date petition was mailed; plant name; and publication date and page number of this **Federal Register** notice. A copy of the petition should also be sent to the Office of the General Counsel-Bethesda, U.S. Nuclear Regulatory Commission, Washington, DC 20555, and to the attorney for the licensee.

Nontimely filings of petitions for leave to intervene, amended petitions, supplemental petitions and/or requests for hearing will not be entertained absent a determination by the Commission, the presiding officer or the Atomic Safety and Licensing Board, that the petition and/or request should be granted based upon a balancing of the factors specified in 10 CFR 2.714(a)(1)(i)-(v) and 2.714(d).

Duquesne Light Company, Docket No. 50-334, Beaver Valley Power Station, Unit No. 1, Shippingport, Pennsylvania

Date of application for amendment: March 9, 1987

Brief description of amendment: The amendment changed the Technical Specifications for Beaver Valley Unit 1 to permit the storage of fuel assemblies of enrichment up to 4.5 weight percent U-235 in the fresh fuel racks and the spent fuel storage pool.

Date of issuance: September 4, 1987

Effective date: September 4, 1987

Amendment No. 114

Facility Operating License No. DPR-66. Amendment revised the Technical Specifications.

Public comments requested as to proposed no significant hazards consideration: Yes, Published in the **Federal Register** August 12, 1987 (52 FR 29914) and August 19, 1987 (52 FR 31101).

No significant hazards consideration comments received: No The Commission's related evaluation of the amendment and final determination of no significant hazards consideration are contained in a Safety Evaluation dated September 4, 1987.

Attorney for licensee: Gerald Charnoff, Esquire, Jay E. Silberg, Esquire, Shaw, Pittman, Potts, and Trowbridge, 2300 N Street, NW., Washington, DC 20037

Local Public Document Room location: B. F. Jones Memorial Library, 663 Franklin Avenue, Aliquippa, Pennsylvania 15001.

NRC Project Director: John F. Stolz

Power Authority of the State of New York, Docket No. 50-333, James A. FitzPatrick Nuclear Power Plant, Oswego, New York

Date of amendment request: August 18, 1987, as supplemented August 19, 1987.

Brief description of amendment: The amendment revises Note (1) of Table 3.7-1 on TS page 208 to permit plant operation for the duration of Cycle 8 with an MSIV closure time of greater than or equal to 2 seconds and less than or equal to 5 seconds for one of the four main steam lines. The existing TS require that all four lines have a closure time of within 3 to 5 seconds. These changes were authorized verbally on August 20, 1987 and verified by our letter of the same date. This amendment is the followup documentation of the authorization.

Date of issuance: September 1, 1987

Effective date: August 20, 1987

Amendment No.: 112

Facility Operating License No. DPR-59: Amendment revised the Technical Specifications.

Public comments requested as to proposed no significant hazards consideration: No. The Commission's related evaluation of the amendment, consultation with the State, final determination of no significant hazards consideration are contained in a Safety Evaluation dated September 1, 1987.

Local Public Document Room location: Penfield Library, State University College of Oswego, Oswego, New York.

Attorney for licensee: Mr. Charles M. Pratt, 10 Columbus Circle, New York, New York 10019.

NRC Project Director: Robert A. Capra, Acting Director

Dated at Bethesda, Maryland this 17th day of September, 1987.

For the Nuclear Regulatory Commission

Steven A. Varga,

Director, Division of Reactor Projects I/II, Office of Nuclear Reactor Regulation

[FR Doc. 87-21821 Filed 9-22-87; 8:45 am]

BILLING CODE 7590-01-D

[Byproduct Material License No. 34-19089-01, Docket No. 30-16055-OM, ASLBP No. 87-555-01-OM]

Designation of Presiding Officer; Advanced Medical Systems, Inc.

Pursuant to delegation by the Commission dated December 29, 1972, published in the **Federal Register**, 37 FR 28710 (1972) and §§ 2.105, 2.700, 2.702, 2.714, 2.714a, 2.717 and 2.721 of the Commission's Regulations, all as amended, a presiding officer is designated in the following proceeding:

Advanced Medical Systems, Inc.

Byproduct Material License No. 34-19089-01
E.A. 87-139

The presiding officer is being designated pursuant to a request for a hearing regarding an Order issued by the Deputy Executive Director for Regional Operations, dated July 23, 1987, entitled "Order Modifying License, Effective Immediately, and Demand for Information."

The presiding officer in this proceeding is The Honorable Ivan W. Smith, Administrative Law Judge.

All correspondence, documents and other materials shall be filed with Judge Smith in accordance with CFR § 2.701. His address is: Administrative Law Judge Ivan W. Smith, Atomic Safety and Licensing Board Panel, U.S. Nuclear Regulatory Commission, Washington, DC 20555.

Issued at Bethesda, Maryland, this 15th day of September 1987.

B. Paul Cotter, Jr.,

Atomic Safety and Licensing Board Panel.

[FR Doc. 87-21932 Filed 9-22-87; 8:45 am]

BILLING CODE 7590-01-M

[Docket No. 50-320-OLA; ASLBP No. 87-554-04-OLA]

Establishment of Atomic Safety and Licensing Board; General Public Utilities Nuclear Corp. et al.

Pursuant to delegation by the Commission dated December 29, 1972, published in the **Federal Register**, 37 FR 28710 (1972), and §§ 2.105, 2.700 2.702, 2.714, 2.714a, 2.717 and 2.721 of the Commission's Regulations, all as amended, an Atomic Safety and Licensing Board is being established in the following proceeding to rule on petitions for leave to intervene and/or requests for hearing and to preside over the proceeding in the event that a hearing is ordered.

General Public Utilities Nuclear Corporation, et al.

Three Mile Island Nuclear Station, Unit 2
Facility Operating License No. DPR-73

This Board is being established pursuant to a notice published by the Commission on July 31, 1987 in the **Federal Register** (52 FR 28626-27) entitled, "Consideration of Issuance of Amendment to Facility Operating License and Opportunity for Prior Hearing." The proposed amendment would delete the current prohibition on disposal of accident-generated water imposed by Technical Specifications 1.17, 3.9.13 and 3/4.9.13.

The Board is composed of the following administrative judges:

Sheldon J. Wolfe, Chairman, Atomic Safety and Licensing Board Panel, U.S. Nuclear Regulatory Commission, Washington, DC 20555

Glenn O. Bright, Atomic Safety and Licensing Board Panel, U.S. Nuclear Regulatory Commission, Washington, DC 20555

Oscar H. Paris, Atomic Safety and Licensing Board Panel, U.S. Nuclear Regulatory Commission, Washington, DC 20555

Issued at Bethesda, Maryland, this 15th day of September 1987.

B. Paul Cotter, Jr.,

Chief Administrative Judge, Atomic Safety and Licensing Board Panel.

[FR Doc. 87-21933 Filed 9-22-87; 8:45 am]

BILLING CODE 7590-01-M

[Seabrook Station, Units 1 and 2 (Offsite Emergency Planning), Docket Nos. 50-443-OL and 50-444-OL; ASLBP No. 82-471-02 OL]

Reconstitution of Board; Public Service Co. of New Hampshire et al.

Pursuant to the authority contained in 10 CFR 2.721, the Atomic Safety and Licensing Board for *Public Service Company of New Hampshire, et al.* (Seabrook Station, Units 1 and 2) (Offsite Emergency Planning, Docket Nos. 50-443-OL and 50-444-OL, is hereby reconstituted by appointing Administrative Law Judge Ivan W. Smith as Chairman in place of Administrative Judge Helen F. Hoyt, who is unable to serve.

As reconstituted, the Board is comprised of the following Administrative Judges:

Ivan W. Smith, Chairman
Gustave A. Linenberger, Jr.
Jerry Harbour

All correspondence, documents and other material shall be filed with the Board in accordance with 10 CFR 2.701 (1980). The address of the new Board is: Administrative Law Judge Ivan W. Smith, Chairman, Atomic Safety and Licensing Board, U.S. Nuclear Regulatory Commission, Washington, DC 20555.

Dated at Bethesda, Maryland, this 15th day of September 1987.

B. Paul Cotter, Jr.,

Chief Administrative Judge, Atomic Safety and Licensing Board Panel.

[FR Doc. 21934 Filed 9-22-87; 8:45 am]

BILLING CODE 7590-01-M

SECURITIES AND EXCHANGE COMMISSION

[Release No. 34-24920; File No. SR-CBOE-87-41]

Self-Regulatory Organizations; Chicago Board Options Exchange, Inc.; Filing and Order Granting Accelerated Approval to Proposed Rule Change

On September 11, 1987, the Chicago Board Options Exchange, Inc. ("CBOE" or "Exchange"), submitted to the Securities and Exchange Commission ("Commission"), pursuant to section 19(b)(1) under the Securities Exchange Act of 1934 ("Act")[1] and Rule 19b-4 thereunder,[2] a proposed rule change to add December and March 230 calls and puts in the options on the Standard and Poor's ("S&P") 500 stock index ("SPX" and "NSX") during the week of September 14, 1987.

Calls and puts in SPX/NSX at the 230 strike price were available for the expiration cycle of September 1987.[3] The proposed rule change will allow the Exchange to continue making available calls and puts in SPX at the 230 strike price for the expiration cycles of December 1987 and March 1988. This will allow market participants who hold existing positions in the September 230 options to roll out of these positions into December 1987 230 options or March 1988 230 options before the September 230 options expire on September 19, 1987. Because the addition of this strike price will make available put options that are extremely far out of the money, the Exchange will caution its member firms that this proposal is intended to allow sophisticated market participants a greater range of hedging possibilities and is not intended for the use of normal retail customers.[4]

The Commission finds that the proposed rule change is consistent with the requirements of the Act and the rules and regulations thereunder applicable to the national securities exchange, and, in particular, the requirements of section 6,[5] and the rules and regulations thereunder. The Commission believes that the addition of this strike price will increase market liquidity by providng sophisticated market participants with the opportunity to roll their hedge positions into forward months without affecting their stock positions. The S&P stock index has risen over the past year so that, under current CBOE rules, the September 1988 strike prices to be added would be much higher than 230. To roll to a higher strike price would cost the market participants an initial cash debit, which could be quite large for a substantial position. It is reasonable for the CBOE to help customers avoid this circumstance by adding a deep-in-the-money strike price. At the same time, the Exchange will caution its members that deep-in-the-money or out-of-the-money strikes may not be appropriate for normal retail customers.

The Commission finds good cause for approving the proposed rule change prior to the thirtieth day after the date of publication of the proposal in the **Federal Register** because it is critical that the interim relief be made available prior to the expiration of the September 230 SPX options on September 19, 1987. Otherwise, an institution that had hedged its position with SPX/NSX September 230 calls will be forced into an economically disadvantageous position because it could not roll into the same strike price. Further, a companion proposed rule change (File No. SRCBOE-87-42) that is being submitted to the Commission to extend the Exchange's ability to open for trading comparable strike prices will be exposed for a full public comment period.

It is therefore ordered, pursuant to section 19(b)(2) of the Act,[6] that the proposed rule change is approved.

For the Commission, by the Division of Market Regulation, pursuant to delegated authority.[7]

Jonathan G. Katz,

Secretary.

Dated: September 15, 1987.

[FR Doc. 87-21902 Filed 9-22-87; 8:45 am]

BILLING CODE 8010-01-M

[1] 15 U.S.C. 78s(b)(1) (1982).

[2] 17 CFR 240.19b-4 (1986).

[3] Both SPX and NSX options have European exercise provisions. An option with a European exercise provision restricts the option holder's ability to exercise the option prior to expiration. The option holder is free to trade out of his position at any time prior to expiration; he just cannot exercise the option prior to expiration. As a result, a writer of an SPX/NSX option does not face the possibility of early exercise.

[4] Institutional investors hedge long positions in a basket of stocks that closely tracks the S&P index with SPX and NSX options. An institutional investor with a short position in an expiring September 230 call will be able to roll that position forward to December or March at a lower cost and will not be forced to sell stock in the process. To roll this position forward, the institution would buy back the September 230 call and sell an equivalent number of December 230 calls. The premium generated by the sale of the December 230 calls would reduce the cost of buying back the September 230 calls and would permit the institution to retain fully its hedged position.

[5] 15 U.S.C. 78f (1982).

[6] 15 U.S.C. 78s(b)(2) (1982).

[7] 17 CFR 200.30-3(a)(12) (1986).

[Release No. 34-24919; File No. SR-NYSE-87-25]

Self-Regulatory Organizations; Proposed Rule Change by New York Stock Exchange, Inc., Relating to the Implementation of a Two-Year Pilot Program To Test Revisions to NYSE Rule 103A, the Exchange's Specialist Performance Evaluation and Improvement Process

Pursuant to section 19(b)(1) of the Securities Exchange Act of 1934 ("Act"), 15 U.S.C. 78s(b)(1), notice is hereby given that on July 29, 1987, the New York Stock Exchange, Inc. ("NYSE") filed with the Securities and Exchange Commission ("Commission") the proposed rule change as described in Items I, II and III below, which Items have been prepared by the self-regulatory organization. The Commission is publishing this notice to solicit comments on the proposed rule change from interested persons.

I. Self-Regulatory Organization's Statement of the Terms of Substance of the Proposed Rule Change

The intent of the Rule 103A is to encourage a high level of market quality and performance in Exchange listed securities. Revised Rule 103A[1] codifies the authority granted to the Exchange Market Performance Committee ("MPC") to develop and administer systems and procedures, (including the determination of appropriate standards and measurements of performance), designed to measure specialist performance and market quality on a periodic basis to determine whether particular specialist units need to take steps to improve their performance. Based on such determinations, the MPC is authorized to take action to encourage performance improvement and to improve or sustain market quality in appropriate cases.

II. Self-Regulatory Organization's Statement of the Purpose of, and Statutory Basis for, the Proposed Rule Change

In its filing with the Commission, the self-regulatory organization included statements concerning the purpose of and basis for the proposed rule change and discussed any comments it received on the proposed rule change. The text of these statements may be examined at the places specified in Item IV below. The self-regulatory organization has prepared summaries (to which the Commission has made some

[1] In its filing the NYSE included copies of revised Rule 103A and other supporting documents.

modifications), set forth in sections (A), (B), and (C) below, of the most significant aspects of such statements.

A. Self-Regulatory Organization's Statement of the Purpose of, and Statutory Basis for, the Proposed Rule Change

(1) *Purpose.* The purpose of the proposed rule change is to implement a two-year pilot program to test revisions to NYSE Rule 103A.

As described in more detail in File No. SR-NYSE-84-12,[2] the MPC's Subcommittee on Performance Measures and Procedures (the "Subcommittee") has been reviewing the Exchange's specialist performance evaluation and improvement procedures for the purpose of codifying them in a revised version of Rule 103A, and to request the Rule be approved by the Commission as a permanent rule of the Exchange. The current Rule 103A has a "sunset" date of July 31, 1987. In a companion filing to this one, the Exchange is proposing to extend current Rule 103A to September 30, 1987[3] so that the Rule may remain in effect while the Commission considers the proposed rule changes being submitted herein.

Overview of the Revised Rule

The Subcommittee's review of the Rule 103A lead to a thorough restructuring of the current rule's measures of specialist performance and the Exchange's performance improvement process, representing the culmination of over two years of effort. Briefly, the revised Rule would:

Codify the authority granted to the Market Performance Committee (in its charter and in the current Rule 103A) to develop and administer appropriate measures and standards of specialist performance;

Define specific performance measures where below standard performance would trigger a Performance Improvement Action (provided below standard performance was not affected by unusual or extenuating circumstances beyond a specialist unit's control);

Codify, and provide structure to, the Exchange's Performance Improvement Action process to address cases of substandard specialist performance;

Add structure to the reallocation process in those cases where a unit fails to achieve measurable performance improvement goals;

Provide a streamlined means of addressing instances of particularly egregious specialist performance in a timely manner; and

Minimize the possible perception of a conflict of interest in the reallocation of stocks resulting from a Performance Improvement Action under the Rule.

In developing measures of specialist performance, the Subcommittee analyzed the current trading environment seeking to identify the needs of today's markets with the objective of enhancing specialist performance and market quality to meet those needs. Both the Subcommittee and the MPC view this process as ongoing and dynamic in that the performance measures recommended today should be re-evaluated and adjusted, or, if appropriate, some measures deleted and new ones added from time to time in response to changing market conditions. However, any such modification, deletion or addition would be communicated to the membership at least one quarter before it is implemented, and would be formally reflected in the text of the Rule.[4]

The revised Rule would incorporate several existing and newly developed measures and standards of specialist performance where below standard performance on any one measure, independently, would result in a Performance Improvement Action. They are:

SPEQ—For the new Specialist Performance Evaluation Questionnaire of "SPEQ" implemented in 1986 (described in more detail in File No. SR-NYSE-85-14),[5] the standard would be set at the "Adequate" level both in terms of overall performance (or a numerical overall median score at or above 117 of 225 points possible), and in each of the five functions (or a functional median score at or above 24 of 45 points possible) measured by the Questionnaire—the dealer function, agency function, and auction market maintenance, communication and administrative functions. A unit would be below the standard if it failed to achieve an overall "Adequate" score in any one quarter or, it failed to achieve an "Adequate" score in the same or any two functions for two consecutive quarters. Based on past experience, the Exchange believes the SPEQ has proven to be an effective means of encouraging high quality specialist performance both overall and by individual units.

Openings—Both regular and delayed. As to regular openings, the timeliness of a unit's common and non-convertible preferred stocks' openings relative to the Exchange's 9:30 a.m. opening time, would be measured. Below standard performance would be any case where, for two consecutive quarters, a specialist unit has not opened, at least 90% of the time, one or more of its common or non-convertible preferred stocks, by means of an opening trade or a quotation, by 9:45 a.m. In calculating a unit's performance in this area, regulatory delayed openings, and post-9:45 a.m. late openings certified by a Floor Official as being justified by market conditions related to particular stocks, would be excluded. The Exchange views timely openings as facilitating transactions in securities, and, in general, contributing to the maintenance of fair and orderly markets which is in the public interest.

The revised Rule also provides a means of measuring the timeliness of requests for non-regulatory delayed openings, as evaluated by Floor Officials and noted on a "Delayed Opening/Halt in Trading" Form. Substandard performance would be defined as any case where a specialist unit receives unfavorable Floor Official evaluations equal to 15% of its registered common stocks, or a minimum of seven, whichever is greater, as to the timeliness of the unit's request for a non-regulatory delayed opening, in any quarter.[6] The Exchange believes that the timely request for the assistance of a Floor Official in arranging an opening may, in some instances, obviate the need for a delayed opening thereby contributing to the proper functioning and overall orderliness of Exchange markets.

OARS (or the Opening Automated Report Service features of the Exchange's SuperDOT system designed to accept member firm's pre-opening market orders)—The timeliness of a unit's inputting of OARS price cards relative to each eligible security's opening time would be measured. Substandard performance would be any case where, for any two quarters during a "rolling" four quarter period, a specialist unit fails to input 90% of its OARS price period, a specialist unit fails

[2] *See*, Securities Exchange Act Rel. No. 20851 (April 11, 1984), 47 FR 15300.

[3] *See*, Securities Exchange Act Rel. No. 24836, August 21, 1987, 52 FR 32860.

[4] Any changes to the performance measures would have to be approved by the Commission pursuant to section 19(b) of the Act.

[5] *See*, Securities Exchange Act Rel. No. 22036 (May 14, 1985) 50 FR 21007.

[6] For example, a unit with 100 registered common stocks would be deemed to have performed unsatisfactorily and hence, subject to a Performance Improvement Action, if it received 15 unfavorable Floor Official evaluations concerning openings in any one quarter. Similarly, a unit with only 5 registered common stocks would have to receive 7 unfavorable Floor Official evaluations concerning its openings in any one quarter to be subject to a Performance Improvement Action.

to input 90% of its OARS price cards within 10 minutes of the respective openings of each eligible security.

DOT—The DOT turnaround performance, concerns a unit's ability to execute and report post-opening market orders up to 2,099 shares through the SuperDOT system on a timely basis. The current standard that 90% of a unit's post-opening market orders be turned around in two minutes or less would be adopted in the revised Rule. A unit would be subject to a Performance Improvement Action if it fell below this standard in any two quarters in a "rolling" four quarter period.

Status Requests—The timeliness of a response, in relation to the time a member firm inquiry as to the status of an order is received by a specialist unit through the SuperDOT system would be measured. A unit would be deemed to be below standard if it does not respond to 75% of its status requests in 30 minutes, during any two quarters in a "rolling" four quarter period.

The performance measures related to the timeliness of the in-putting of OARS price cards, timely DOT turnaround performance and the timeliness of a unit's responses to status requests are designed to promote the efficiency of the processing of information with respect to securities transactions which are in the interest of both the membership of the Exchange and public investors.

Marketshare—The revised Rule would state that where market share in any issue has declined significantly within two is attributable to factors within the control of the unit, and, if so, a Performance Improvement Action would be initiated.

To assist the MPC, the Subcommittee identified a number of factors affecting marketshare performance which they believe are, generally, within the control of specialist units. They are a unit's commission rates, whether a unit takes advantage of available automated systems, whether a unit is overly aggressive in break-ups of block crosses and specialist performance in general. The Subcommittee also noted several factors which they believe are not generally within the control of specialist units, such as the proprietary interests of some member firm order suppliers with market-making operations at other market centers. The MPC intends to consider these, and possibly other factors in determining whether below standard marketshare performance is attributable to those within the control of specialist units.

The marketshare measure is intended to contribute to the Exchange's efforts to maintain and improve its competitive position, and, generally, to stimulate competition among exchange markets that is consistent with section 11A of the Act, and is in the public interest and appropriate for the protection of investors.

The Performance Improvement Action Process

Once a unit falls below any specific performance standard set forth in revised Rule 103A, a Performance Improvement Action would be triggered. In such a proceeding all notifications to a specialist unit would be in writing, and a written record of the MPC's deliberations would be maintained.

In the event of such an action, the MPC would identify one or more specific, measurable performance goals the unit would be expected to achieve. The specific goal[s] would be related to the area of performance where the unit's performance was below standard. For example, should a unit fall below the DOT standard as described above, the MPC may identify as a performance improvement goal that the unit improve its DOT turnaround performance to a level at or above the minimum acceptable performance standard. In addition, the MPC may also identify as a performance improvement goal that the unit maintain a level of DOT turnaround performance at or above standard for a specific time period as evidence of sustained performance improvement. However, the identification of specific, measurable performance goals a unit would be expected to achieve may vary from case-to-case based on the nature of the performance problem.

The MPC would designate an appropriate Performance Improvement Period, within which the unit is to achieve its performance goals (no specific time period would be prescribed in the Rule). The MPC would determine an appropriate time period in each case based on the nature of the problem, and the steps the unit plans to take to achieve its goals.[7] In order to provide the MPC with another viewpoint of the unit's progress and performance improvement, the MPC would select a four-person Monitoring Team (composed of non-Market Performance MPC members and consisting of two specialists and two non-specialists) who would render a report on the unit's results to the MPC at the end of the Performance Improvement Period. The Monitoring Team would be randomly selected as needed from a pool of qualified individuals nominated by the various Exchange constituent groups and previously approved by the MPC.[8] At the end of the time period allotted, the MPC would review the Monitoring Team's report[9] and related performance data. The unit would then be judged solely on the basis of whether or not it achieved the improvement goals set by the MPC. At any time throughout the process an allocation "freeze" may be imposed if the MPC believes such action would encourage the unit to achieve its performance goals.

Should the unit achieve its goals, the Performance Improvement Action would be concluded. However, should the unit fail to do so, the MPC would initiate a Reallocation Proceeding. In such a proceeding, the MPC would determine one or more of the unit's stocks to be reallocated. In selecting stocks for reallocation the MPC would consider specific data indicating particular stocks where performance may have been deficient. In this regard, some of the objective measures developed, such as OARS and DOT, may be helpful to the MPC in making its determination. In addition, a question on the new SPEQ elicits the evaluator's "specific, professional comments relative to the unit's handling of a particular stock, type of stock or market situation and the performance of any individual specialist within the unit." Responses to this question may also be useful to the MPC in selecting stocks for reallocation.

Due Process Safeguard

The procedural safeguards incorporated in both the Performance Improvement Action and Reallocation Proceedings are designed to balance the need for the Exchange to maintain an effective performance improvement process with the due process rights of specialists registered in Exchange listed securities. For example, all notifications to a specialist unit would be in writing and would specify the reasons that have lead the MPC to make a particular determination. A specialist unit would

[7] Each unit must develop a performance improvement plan whereby it identifies strategies it intends to employ to meet the MPC's performance goals. The unit may devise its own strategies or use the assistance of the monitoring team. The MPC reviews the unit's plan and either approves the plan or modifies it.

[8] In this regard, we note that the Exchange currently selects members of its allocation panel in a similar fashion.

[9] The rule also permits the Monitoring Team, at its discretion, to submit interim reports to the MPC notifying the MPC of the unit's progress in meeting its performance improvement goals. In the interim report, the Monitoring Team may recommend that the performance improvement action be concluded if the unit's performance so warrants; recommend that the performance improvmeent plan be altered including extending the performance improvement period; and recommend the imposition of an allocation freeze to stimulate improved specialist performance.

also be given the opportunity to appear before the MPC and present its case and a written record of the MPC's deliberations would be maintained. Further, a unit may appeal any adverse decision of the MPC to the Exchange's Board of Directors pursuant to the provisions of Article IV, Section 14 of the Exchange's Constitution.

Other Features of the Revised Rule

Three additional features of the revised Rule would also deal with:

First, egregious situations. In cases of specialist performance so egregiously deficient as to call into question the integrity and reputation of Exchange markets, the MPC would be able to by-pass the Performance Improvement Action process and move directly to a reallocation proceeding. In effect, it provides the MPC with a means of dealing with the worst cases in a timely fashion.

In an egregious situation, as in all actions under Rule 103A, the specialist unit would have the right to appear before the MPC and present its case. The unit would also have the right, as provided in the Exchange's Constitution, to seek review by the Exchange's Board of Directors of any adverse decision.

Second, in order to minimize the possible perception of a conflict of interest in the event of a reallocation under the Rule, the member organizations of individuals serving on the MPC, and the organizations of the particular Monitoring Team members assigned to monitor and assist a unit, would be barred from applying for any stock to be reallocated.

Third, the MPC may review performance related data pertaining to any unit relative to the unit's peers. Where appropriate, the MPC may engage in educational counseling to improve a unit's performance.

The Exchange intends that the two-year pilot period would commence upon actual implementation of the new program by the Exchange. Following any Commission approval, the Exchange intends to give its membership one quarter's advance notice before actually implementing the program. The pilot program is intended to permit the Exchange to monitor the operation of the revised Rule and its associated processes under actual conditions and to make such modifications to the proposed revised Rule as may be deemed appropriate. After an appropriate evaluation period, the Exchange expects to codify the revisions with the Commission and to request permanent approval of Rule 103A.

2. *Basis Under the Act for Proposed Rule Change.* The statutory basis for the proposed rule change is section 6(b)(5) of the Act which, among other things, requires Exchange rules to be designd to promote just and equitable principles of trade, to foster cooperation and coordination with persons engaged in regulating, clearing, settling and processing information with respect to and facilitating transactions in securities, to remove inpediments to and perfect the mechanism of a free and open market and a national market system, and in general to protect investors and the public interest.

B. Self-Regulatory Organization's Statement on Burden on Competition

The proposed rule change will not impose any burden on competition that is not necessary or appropriate in furtherance of the purposes of the Act.

C. Self-Regulatory Organization's Statement on Comments on the Proposed Rule Change Received From Members, Participants or Others

The Exchange has neither solicited nor received written comments on the proposed rule change.

III. Date of Effectiveness of the Proposed Rule Change and Timing for Commission Action

Within 35 days of the date of publication of this notice in the **Federal Register** or within such longer period (i) as the Commission may designate up to 90 days of such date if it finds such longer period to be appropriate and publishes its reasons for so finding or (ii) as to which the self-regulatory organization consents, the Commission will:

A. By order approve such proposed rule change, or

B. Institute proceedings to determine whether the proposed rule change should be disapproved.

IV. Solicitation of Comments

Interested persons are invited to submit written data, views and arguments concerning the foregoing. Persons making written submissions should file six copies thereof with the Secretary, Securities and Exchange Commission, 450 Fifth Street, NW., Washington, DC 20549. Copies of the submission, all subsequent amendments, all written statements with respect to the proposed rule change that are filed with the Commission, and all written communications relating to the proposed rule change between the Commission and any person, other than those that may be withheld from the public in accordance with the provisions of 5 U.S.C. 552, will be available for inspection and copying in the Commission's Public Reference Section, 450 Fifth Street, NW., Washington, DC 20549. Copies of such filing will also be available for inspection and copying at the principal offices of the NYSE. All submissions should refer to the file number in the caption above and should be submitted by October 14, 1987.

For the Commission, by the Division of Market Regulation, pursuant to delegated authority.

Jonathan G. Katz,

Secretary.

Dated: September 15, 1987.

[FR Doc. 87-21901 Filed 9-22-87; 8:45 am]

BILLING CODE 8010-01-M

[Release No. 34-24926; File No. SR-NYSE-87-32]

Self-Regulatory Organizations; Filing and Order Granting Accelerated Approval of Proposed Rule Change by the New York Stock Exchange, Inc.; Auxiliary Closing Procedures for Orders Relating to Expiring Stock Index Contracts

Pursuant to section 19(b)(1) of the Securities Exchange Act of 1934, 15 U.S.C. 78s(b)(1), notice is hereby given that on September 15, 1987, the New York Stock Exchange, Inc. ("NYSE"or Exchange") filed with the Securities and Exchange Commission the proposed rule change as described in Items I, II, and III below, for which Items I and II have been prepared by the self-regulatory organization. The Commission is publishing this notice to solicit comments on the proposed rule change from interested persons.

I. Self-Regulatory Organization's Statement of the Terms of Substance of the Proposed Rule Change

The proposed rule change adds auxiliary closing procedures for assisting in handling the order flow associated with the concurrent expiration of stock index futures, stock index options and options on stock index futures on September 18, 1987. It requires the use of procedures substantively identical to those used on June 19, 1987 and on several earlier Expiration Fridays. Only the list of the pilot stocks affected by the rule change has been altered, due to one name change and the substitution of four stocks, as a consequence of changes in trading activity.

Specifically, the auxiliary procedures provide that market-at-the-close stock orders in pilot stocks relating to index arbitrage positions must be received by the Exchange by 3:30 p.m. on September

18. The Exchange will promptly disseminate the size of substantial market other imbalances (50,000 shares of more as of 3:30 p.m.) in 50 pilot stocks. The procedures also ban entry of market-at-the-close orders after 3:30 p.m. unless the orders: (1) Offset the imbalances, and (2) are not for the purpose of liquidating an index arbitrage position.

The Exchange characterizes the proposed rule change as a Rule of the Board of Directors of the Exchange. The proposed rule change supercedes all other Exchange rules and policies inconsistent with it.

II. Self-Regulatory Organization's Statement of the Purpose of, and Statutory Basis for, the Proposed Rule Change

In its filing with the Commission, the self-regulatory organization included statements concerning the purpose of and basis for the proposed rule change and discussed any comments it received on the proposed rule change. The text of these statements may be examined at the places specified in Item IV below and is set forth in Sections A, B, and C below.

A. Self-Regulatory Organization's Statement of the Purpose of, and Statutory Basis for, the Proposed Rule Change

1. *Purpose.* The purpose of the proposed rule change is to comply with the request of the Commission that the Exchange repeat the June 19 closing procedures on September 18, 1987. The proposed rule change will make the procedures a rule of the Exchange.

2. *Statutory.* The basis under the 1934 Act for the proposed rule change in section 6(b)(5), which requires that rules of the Exchange be designed to prevent fraudulent and manipulative acts and practices, to promote just and equitable principles of trade, to remove impediments to and perfect the mechanism of a free and open market and, in general, to protect investors and the public interest.

B. Self-Regulatory Organization's Statement on Burden on Competition

The proposed rule change does not impose any burden on competition that is not necessary or appropriate in furtherance of the purposes of the 1934 Act.

C. Self-Regulatory Organization's Statement on Comments on the Proposed Rule Change Received From Members, Participants or Others

The Exchange has not solicited, and does not intend to solicit, comments regarding the proposed rule change. The Exchange has not received any unsolicited written comments from members or other interested parties.

III. Date of Effectiveness of the Proposed Rule Change and Timing for Commission Action

The Commission finds that the proposed rule change is consistent with the requirements of the Act and the rules and regulations thereunder applicable to a securities exchange, and in particular, the requirements of section 6 and the rules and regulations thereunder. The market-on-close procedures described here have been utilized on the prior four Expiration Fridays (the quarterly expiration when stock index futures, stock index options and options on stock index futures have simultaneous expirations). These procedures were part of efforts by the Commission and the self-regulatory organizations to address stock market volatility that has been associated with certain index arbitrage trading strategies on Expiration Fridays. By requiring submission of market-at-close orders early and disseminating imbalances, the NYSE could attract contra-side interest to alleviate imbalances caused by the closing of index arbitrage positions. The procedures have proven to be operational successes, and have significantly contributed to the smooth handling of the increased order flow associated with these expirations.

The Exchange has requested that the proposed rule change be given accelerated effectiveness pursuant to section 19(b)(2) of the Act. The Commission finds good cause for approving this rule change prior to the thirtieth day after the date of publication of notice of filing thereof in that the Commission desires to notify market participants as soon as possible of the Exchange's intention to repeat these procedures on the upcoming September 18, 1987 expiration. Moreover, the procedures contain no substantive changes from the procedures utilized by the NYSE on June 19, 1987 and several earlier Expiration Fridays.

IV. Solicitation of Comments

Interested persons are invited to submit written data, views and arguments concerning the foregoing. Persons making written submissions should file six copies thereof with the Secretary, Securities and Exchange Commission, 450 Fifth Street NW., Washington, DC 20549. Copies of the submission, all subsequent amendments, all written statements with respect to the proposed rule change that are filed with the Commission, and all written communications relating to the proposed rule change between the Commission and any person, other than those that may be withheld from the public in accordance with the provisions of 5 U.S.C. 552, will be available for inspection and copying in the Commission's Public Reference Room, 450 Fifth Street NW., Washington, DC 20549. Copies of such filing will also be available for inspection and copying at the NYSE. All submissions should refer to the file number in the caption above and should be submitted by October 14, 1987.

For the Commission, by the Division of Market Regulation, pursuant to delegated authority.

Dated: September 17, 1987.

Jonathan G. Katz,

Secretary.

[FR Doc. 87-21896 Filed 9-22-87; 8:45 am]

BILLING CODE 8010-01-M

Release No. IC-15988; 812-6831]

Application; Charter National Life Insurance Co.

September 17, 1987.

AGENCY: Securities and Exchange Commission.

ACTION: Notice of Application for Exemption under the Investment Company Act of 1940 (the "Act").

Applicants: Charter National Life Insurance Company ("Charter"), Charter National Variable Annuity Account (the "Variable Account") and CNL, Inc. ("CNL") (collectively referred to as "Applicants").

Relevant 1940 Act Sections: Exemption requested under section 6(c) from sections 26(a)(2) and 27(c)(2).

Summary of Application: Applicants seek an order to permit them to issue variable annuity contracts which provide for the deduction of mortality and expense risk charges from the assets of the Variable Account.

Filing Date: August 13, 1987.

Hearing or Notification of Hearing: If no hearing is ordered, the application will be granted. Any interested person may request a hearing on this application, or ask to be notified if a hearing is ordered. Any requests must be received by the SEC by 5:30 p.m., on October 13, 1987. Request a hearing in writing, giving the nature of your interest, the reason for the request, and the issues you contest. Serve the Applicants with the request, either personally or by mail, and also send it to

the Secretary of the SEC, along with proof of service by affidavit, or, for lawyers, by certificate. Request notification of the date of a hearing by writing to the Secretary of the SEC.

ADDRESSES: Secretary, SEC, 450 5th Street NW., Washington, DC 20549; Applicants, Charter National Life Insurance Company, 8301 Maryland Ave., St. Louis, Missouri 63105.

FOR FURTHER INFORMATION CONTACT: Heidi Stam, Staff Attorney (202) 272-3017 or Lewis B. Reich, Special Counsel, (202) 272-2061 (Division of Investment Management).

SUPPLEMENTARY INFORMATION: Following is a summary of the application. The complete application is available for a fee from either the SEC's Public Reference Branch in person or the SEC's commercial copier (800) 231-3282 (in Maryland (301) 258-4300).

Applicants' Representations

1. Charter, a stock life insurance company incorporated under Missouri law on December 7, 1955, is a wholly-owned subsidiary of Leucadia National Corporation, a New York corporation ("Leucadia"). Leucadia is a diversified holding company, the common stock of which is listed on the New York Stock Exchange and the Pacific Stock Exchange.

2. The Variable Account was established under Missouri law on May 15, 1987, and is registered as a unit investment trust under the Act. The Variable Account was established by Charter in connection with the proposed issuance of certain variable annuity contracts (the "Contracts").

3. The Contracts are single premium variable deferred annuities which, subject to certain conditions and limitations, allow contract owners to make additional payments of premiums. The Contracts may be purchased with a minimum initial premium of $15,000.

4. If the annuitant dies prior to the date annuity payments are scheduled to begin (the "Maturity Date") and the Contract is in force, a death benefit will be paid to the designated beneficiary under the Contract.

5. CNL, a wholly-owned subsidiary of Charter and a broker-dealer registered with the SEC under the Securities Exchange Act of 1934, will serve as the principal underwriter for the Contracts.

6. The Variable Account will invest exclusively in the Scudder Variable Life Investment Fund (the "Fund"). The Variable Account currently has five subaccounts (the "Subaccounts"), each of which invests solely in a specific corresponding portfolio of the Fund (the "Portfolios"). The Fund is a diversified, open-end management investment company and was organized as a Massachusetts Business Trust on March 15, 1985. Premiums paid under a Contract will be allocated, as directed by the contract owner, to one or more of the Subaccounts and/or to Charter's general account (the "General Account").

7. A charge is made against the value of net assets in each Subaccount to reimburse Charter for certain mortality and expense risks assumed under the Contracts and for the costs of administering the Contracts and the Variable Account. The mortality risk borne by Charter under the Contracts is to pay death benefits prior to the Maturity Date and to make periodic annuity payments regardless of how long all annuitants may live. The expense risk undertaken by Charter is that the actual expenses involved in administering the Contracts may exceed the amount recovered from the contract administration charge and the records maintenance charge.

8. The mortality and expense risk charge will be deducted from the value of net assets in each Subaccount on a daily basis in an amount equal to an effective annual rate of .90%. Of that amount, approximately .70% is charged to cover the mortality risk and approximately .20% is charged to cover the expense risk. The rate of this charge is guaranteed not to increase over the life of the Contracts.

9. A daily charge is deducted from the value of net assets in each Subaccount to cover the cost of administering the Contract and the Variable Account in an amount equal to an effective annual rate of .40%. Administrative expenses related to the Contracts include, among other things, (i) processing Contract applications, Contract changes, cash surrenders, death claims and premiums; (ii) record keeping and reporting; an (iii) overhead costs. In addition, if a Contract has an Accumulated Value of less than $50,000 on a Contract Anniversary, a records maintenance charge of $30 will be deducted from the Accumulated Value on that date. The administration charge and the records maintenance charge represent reimbursement only for the administrative costs expected to be incurred over the life of the contract. Charter does not expect or intend to make a profit from these charges. The rates of these charges are guaranteed not to increase over the life of the Contracts.

10. Charter does not impose a sales charge at the time a premium is paid under the Contract. However, a contingent deferred sales charge ("Surrender Charge") is imposed on certain partial and full surrenders to cover certain expenses relating to the sale of the Contracts.

11. The Surrender Charge for withdrawal of a permium in the contract year a premium is paid is 6% of such premium. The Surrender Charge decreases by 1% for each additional contract year the preimum remains on deposit under the Contract before withdrawal. The amount of any applicable Surrender Charge is calculated on the premiums not previously withdrawn without regard to any increase or decrease in the Accumulated Value. The amount of the Surrender Charge will be calculated as a percentage of each premium paid under the Contract. The applicable Surrender Charge will be determined based upon the date the written request for surrender is received by Charter and will be calculated with respect to premiums paid under the Contract on a first-in, first-out basis.

12. The Surrender Charge may be insufficient to cover all distribution expenses. However, any deficiency will be met from Charter's general corporate funds, which may include amounts derived from the mortality and expense risk charge.

13. Applicants submit that the mortality and expense risk charge is a reasonable charge to compensate Charter for the risk that (i) annuitants under the Contracts will live longer as a group than has been anticipated in setting the annuity rates guaranteed in the Contracts, (ii) the mortality rate of annuitants prior to the Maturity Date will be greater than anticipated in establishing the death benefit payable under the Contract, and (iii) administrative expenses will be greater than the amounts derived from the contract administration charges, including the records maintenance charge.

14. Charter represents that the charge of .90% for mortality and expense risks assumed by Charter is within the range of industry practice with respect to comparable annuity products. This representation is based upon Charter's analysis of publicly available information about similar industry products, taking into consideration such factors as the current charge levels, existence of charge level guarantees, and guaranteed annuity rates of such contracts. Charter represents that, as a further condition for this relief, it will maintain at its administrative offices, and make available to the SEC, a memorandum setting forth in detail the products analyzed in the course of, and

the methodology and results of, its comparative survey made to support this representation.

15. Charter also represents that it has concluded that there is a reasonable likelihood that the proposed distribution financing arrangement will benefit the Variable Account and contract owners. As a further condition for relief, Applicants represent that a memorandum, setting forth the basis for this representation, will be maintained by Charter at its administrative offices and will be available to the SEC.

16. Applicatns also represent as a condition of this relief, that the Variable Account will invest only in management investment companies which undertake, in the event that it should adopt any plan to finance distribution expenses under Rule 12b-1 under the Act, to have a board of directors, a majority of whom are not interested persons of the company, formulated and approve any such distribution plan pursuant to the provisions of Rule 12b-1 under the Act.

For the Commission, by the Division of Investment Management, pursuant to delegated authority.

Jonathan G. Katz,

Secretary.

[FR Doc. 87-21897 Filed 9-22-87; 8:45 am]

BILLING CODE 8010-01-M

[Rel. No. IC-15979; 812-6767]

Application; GMO Core Trust

September 15, 1987.

AGENCY: Securities and Exchange Commission ("SEC").

ACTION: Notice of application for an order amending an existing order of exemption under the Investment Company Act of 1940 ("1940 Act").

Applicant: GMO Core Trust, a Massachusetts business trust (the "Applicant" or the "Trust").

Relevant 1940 Act Sections: Exemption requested under section 6(c) and 17(b) from section 17(a).

Summary of Application: Applicant seeks an amendment to an order dated November 14, 1986 (Investment Company Act Release No. 15415) exempting Applicant from section 17(a) of the Act to the extent necessary to permit stockholders of Applicant's Domestic Equity Series ("Domestic Equity Fund") to purchase and redeem shares of that series in-kind. The amendment would permit shareholder's owning more than 5% of the outstanding shares of the Trust or of the Applicant's Domestic Equity (South Africa Free) Series ("South Africa Free Fund"), the International Series ("International Fund") or any subsequently created series to purchase and redeem shares of the relevant series in-kind.

Filing Date: The application was filed on June 23, 1987.

Hearing or Notification of Hearing: If no hearing is ordered, the application will be granted. Any interested person may request a hearing on this application, or ask to be notified if a hearing is ordered. Any requests must be received by the SEC by 5:30 p.m., on October 9, 1987. Request a hearing in writing, giving the nature of your interest, the reason for the request, and the issues you contest. Serve the Applicant with the request, either personally or by mail, and also send it to the Secretary of the SEC, along with proof of service by affidavit or, for lawyers, by certificate. Request notification of the date of a hearing by writing to the Secretary of the SEC.

ADDRESSES: Secretary, SEC, 450 5th Street, NW., Washington, DC 20549. Applicant, 125 High Street, Boston, Massachusetts 02110.

FOR FURTHER INFORMATION CONTACT: Curtis R. Hilliard, Special Counsel, (202) 272-3030 (Division of Investment Management).

SUPPLEMENTARY INFORMATION: Following is a summary of the application; the complete application is available for a fee from either the SEC's Public Reference Branch in person or the SEC's commercial copier who can be contacted at (800) 231-3282 (in Maryland (301) 258-4300).

Applicant's Representations

1. Applicant is an open-end, diversified management investment company registered under the 1940 Act and currently has three portfolios (each a "Fund" and together with any subsequently created series, the "Funds") represented by shares of the Domestic Equity Fund, South Africa Free Fund and International Fund, respectively. Each Fund is advised and managed by Grantham, Mayo, Van Otterloo & Co. ("Manager").

2. Shares of each Fund are sold to investors by the Applicant. The minimum initial investment for the Domestic Equity Fund, the South Africa Free Fund and the International Fund (collectively, the "Extant Funds") is $2,500,000 and the minimum subsequent investment in the Extant Funds is $250,000 minimum. The initial investment for any Fund other than an Extant Fund will be at least $2,000,000 and the minimum subsequent investment for any such Fund will be at least $100,000. Related investors in a Fund may aggregate investments for the purposes of these minimum investment requirements in accordance with policies approved by the Applicant's board of trustees from time to time. The Applicant's prospectus and statement of additional information (together, the "Prospectus") provide that an investor may purchase shares of any Fund either in cash or in exchange for shares of common stock owned by the investor ("in-kind investments") or a combination thereof. The purchase price of shares is the net asset value of the shares determined after the purchase order is received plus a premium established from time to time by the Applicant. The premium on in-kind investments in the Domestic Equity and South Africa Free Funds is .10% of the net asset value of the shares. For the International Fund, there is currently no premium on in-kind investments. The premiums are paid to and retained by the relevant Fund.

3. An investor may make an in-kind investment in a Fund only if (1) the Manager, in its sole discretion, believes the investor's securities are appropriate investments for the Fund, (2) the investor represents and agrees that all securities offered to the Fund are not subject to restriction upon their sale by the Fund under the Securities Act of 1933, or otherwise, and (3) the securities may be acquired under the investment restrictions applicable to the relevant Fund. The Prospectus currently prohibits in-kind investments in the South Africa Free or International Funds by any investor who owns greater than 5% of the shares of the relevant Fund.

4. Shares of each Fund are redeemed at the net asset value per share of the relevant Fund next determined after receipt of the redemption request, less the applicable redemption fee. In the case of the Domestic Equity and South Africa Free Funds, the redemption fee for in-kind redemptions will be .10%. For the International Funds, there is no redemption fee on redemptions in-kind. Redemption fees will be retained by the relevant fund and are intended to cover brokerage and other expenses of the Fund arising out of redemptions.

5. The Applicant seeks an exemption to permit shareholders owning more than 5% of the outstanding shares of the Trust or of the South Africa Free Fund, the International Fund or any subsequently created Fund (such shareholders not otherwise "affiliated persons" of the Trust within the meaning of section 2(a)(3) of the 1940 Act being referred to as "Affiliated Sharedholders" of the Trust or a Fund) to make in-kind investments in the relevant Fund and to permit the

Applicant to redeem shares of Affiliated Shareholders in -kind. The Applicant received an order dated November 14, 1986 (Investment Company Act of 1940 Release No. 15415) exempting it from section 17(a) of the Act to the extent necessary to permit shareholders who own more than 5% of the shares of the Domestic Equity Fund to purchase and redeem shares of the Domestic Equity Find in-kind.

Applicant's Conditions

This Application is subject to the following conditions:

1. The securities acquired by each Fund in an in-kind investment or distributed to an Affiliated Shareholder pursuant to a redemption in-kind (the "Securities") will be limited to securities which are listed on a securities exchange or for which quoted bid prices are available.

2. The Securities will be valued, in the case of Securities listed on a securities exchange for which market quotations are available, at their last quoted sales price, or, if there is no such reported sale, at the most recent quoted bid price and, in the case of unlisted equity Securities, at the most recent quoted bid price.

3. The Applicant's board of trustees, including a majority of the trustees who are not interested persons (as defined in the 1940 Act) of the Applicant (the "Independent Trustees") will determine no less frequently than annually: (a) Whether the Securities have been valued in accordance with Condition 1, (b) whether the acquisition or distribution of any such Securities is consistent with the policies of the relevant Fund as reflected in the Prospectus, and (c) whether the procedures for valuation and review described in Condition 2 and this Condition 3 continue to be appropriate.

4. The Applicant will maintain and preserve for a period of not less than six years from the end of the fiscal year in which any in-kind investment by, or redemption in-kind to, an Affiliated Shareholder occurred, the first two years in an easily accessible place, a written record of each such investment or redemption setting forth a description of each Security distributed, the identity of the Affiliated Shareholder, the terms of the acquisition or distribution and the information or materials upon which the valuation described in Condition 2 were made.

Applicant's Legal Conclusions

The proposed transactions, including the consideration to be paid and received, are fair and reasonable, do not involve overreaching by either the Applicant or an Affiliated Shareholder, are consistent with the investment policies of the Funds, are necessary or appropriate in the public interest and are consistent with the protection of investors and the purposes fairly intended by the policy and provisions of the Act.

For the Commission, by the Division of Investment Management, under delegated authority.

Jonathan G. Katz,

Secretary.

[FR Doc. 87-21898 Filed 9-22-87; 8:45 am]

BILLING CODE 8010-01-M

[Release No. IC-15982; File No. 812-6744]

Application; The Mutual Life Insurance Company of New York, et al.

September 17, 1987.

AGENCY: Securities and Exchange Commission ("SEC").

ACTION: Notice of application for exemption under the Investment Company Act of 1940 (the "1940 Act").

Applicants: The Mutual Life Insurance Company of New York ("MONY"), MONY Life Insurance Company of America ("MONY America"), MONY Legacy Life Insurance Company ("MONY Legacy") (together, "Companies"), MONY America Variable Account A, and MONY Legacy Variable Account A ("Account(s)").

Relevant 1940 Act Sections: Exemption requested *under* section 6(c) *from* sections 26(a)(2)(C) and 27(c)(2).

Summary of Application: Applicants request exemption to deduct a daily mortality and expense risk charge equal to an effective annual rate of 1.25%, with .80% for mortality and .45% for expense risk assumptions, in connection with certain variable annuity contracts ("contracts").

Filing Date: The application was filed on June 3, 1987, and amended on August 26, 1987.

Hearing or Notification of Hearing: If no hearing is ordered, the application will be granted. Any interested person may request a hearing on this application, or ask to be notified if a hearing is ordered. Any requests must be received by the SEC by 5:30 p.m., on October 13, 1987. Request a hearing in writing, giving the nature of your interest, the reason for the request, either personally or by mail, and also send it to the Secretary of the SEC, along with proof of service by affidavit, or, for lawyers, by certificate. Request notification of the date of a hearing by writing to the Secretary of the SEC.

ADDRESSES: Secretary, SEC, 450 5th Street NW., Washington, DC 20549. Applicants, 1740 Broadway, New York, New York 10019.

FOR FURTHER INFORMATION CONTACT: Financial Analyst Margaret Warnken, (202) 272-2058 or Special Counsel Lewis B. Reich, (202) 272-2061 (Division of Investment Management).

SUPPLEMENTARY INFORMATION: Following is a summary of the application; the complete application is available for a fee from either the SEC's Public Reference Branch in person or the SEC's commercial copies (800) 231-3282 (in Maryland (301) 253-4300).

Applicants' Representations

1. The Companies are stock life insurance companies. MONY America is organized under the laws of Arizona; MONY Legacy, under the laws of New York. The Accounts are (will be) registered under the 1940 Act as a unit investment trust. MONY, a registered broker-dealer, is the principal underwriter for the contracts.

2. During the period prior to the annuity commencement date, the contractholder may allocate purchase payment(s) among six subaccounts of the Accounts, and each subaccount will invest only in a corresponding portfolio of MONY Series Fund, Inc. ("Fund"). A transfer charge of $15 (which may be raised to an amount not exceeding $25) will be imposed for each transfer instructed by the contractholder in excess of four transfers in a contract year. A contingent deferred sales charge ("Surrender Charge") will be deducted, when applicable, in the event of a surrender. In no event will the aggregate Surrender Charge exceed 5 percent of the total purchase payments made in the contract year of the surrender and during the five preceding contract years.

3. An annual contract charge is deducted from cash value on each contract anniversary prior to the annuity commencement date, on the annuity commencement date, and on full surrender of the contract. This charge is currently $30, and will never exceed $50.

4. A daily charge equivalent to an annual rate of 1.25%, with .80% for mortality and .45% for expense risk assumptions, will be deducted from the values of the net assets of the Accounts to compensate for mortality and expense risks assumed in connection with the contracts. The mortality risk assumed is that annuitants may live for a longer time than projected, and that an aggregate amount of annuity benefits greater than that projected will accordingly be payable. The expense

risk assumed is that expenses incurred in issuing and administering the contracts will exceed the administrative charges provided in the contracts.

5. Exemption from the provisions of section 26(a)(2)(C) and 27(c)(2) is requested to the extent necessary to permit the deduction of a mortality and expense risk charge. Applicants represent that:

(a) The mortality and expense risk charge has been designed to reasonably compensate the Companies for the assumption of mortality and administrative and sales expense risks.

(b) The mortality and expense risk charge is within the range of industry practice for comparable annuity contracts based on the Companies' analyses of publicly available information, taking into account current charge levels, the manner in which charges are imposed, guarantees of charge levels or annuity rates, and the markets in which the contracts will be offered. The Companies have incorporated the identity of the products analyzed and their analyses, including their methodology and results, into memoranda which they will maintain as long as there are contracts outstanding, and will make available to the SEC or its staff upon request.

(c) The sales charge may be insufficient to cover all costs relating to the distribution of the contracts. Applicants have concluded that there is a reasonable likelihood that the proposed distribution financing arrangement will benefit the Accounts and contractholders, and Applicants will maintain and make available to the SEC or its staff a memorandum setting forth the basis for this representation; and

(d) The Accounts will invest only in management investment companies which undertake, in the event it should adopt a plan for financing distribution expenses pursuant to Rule 12b-1, to have such a plan formulated and approved by a board of directors or trustees, the majority of whom are not "interested persons" of the management company.

6. The exemption requested to permit the deduction of the mortality and expense risk charge is necessary or appropriate in the public interest and consistent with the protection of investors and the purposes fairly intended by the policy and provision of the 1940 Act.

For the SEC, by the Division of Investment Management, pursuant to delegated authority.

Jonathan G. Katz,

Secretary.

[FR Doc. 87-21899 Filed 9-22-87; 8:45 am]

BILLING CODE 8010-01-M

[Release No. 35-24462]

Applications; Filings Under the Public Utility Holding Company Act of 1935 ("Act")

September 17, 1987.

Notice is hereby given that the following filing(s) has/have been made with the Commission pursuant to provisions of the Act and rules promulgated thereunder. All interested persons are referred to the application(s) and/or declaration(s) for complete statements of the proposed transaction(s) summarized below. The application(s) and/or declaration(s) and any amendment(s) thereto is/are available for public inspection through the Commission's Office of Public Reference.

Interested persons wishing to comment or request a hearing on the application(s) and/or declaration(s) should submit their views in writing by October 13, 1987 to the Secretary, Securities and Exchange Commission, Washington, DC 20549, and serve a copy on the relevant applicant(s) and/or declarant(s) at the addresses specified below. Proof of service (by affidavit or, in case of an attorney at law, by certificate) should be filed with the request. Any request for hearing shall identify specifically the issues of fact or law that are disputed. A person who so requests will be notified of any hearing, if ordered, and will receive a copy of any notice or order issued in the matter. After said date, the application(s) and/or declaration(s), as filed or as amended, may be granted and/or permitted to become effective.

Middle South Utilities (70-6985)

Middle South Utilities, Inc. ("MSU"), 225 Baronne Street, New Orleans, Louisiana 70112, a registered holding company, its electric generating subsidiary, System Energy Resources, Inc. ("SERI"), (formerly, Middle South Energy, Inc.), P.O. Box 23070, Jackson, Mississippi 39225 and MSU's operating electric utility subsidiaries, Mississippi Power & Light Company ("MP&L"), P.O. Box 1640, Jackson, Mississippi 39205, Arkansas Power & Light Company, P.O. Box 551, Little Rock, Arkansas 72203, Louisiana Power & Light Company, 142 Delaronde Street, New Orleans, Louisiana 70174 and New Orleans Public Service Inc., 317 Baronne Street, New Orleans, Louisiana 70112, have filed a post-effective amendment to a declaration pursuant to sections 6(a) and 7 of the Act.

By supplemental order dated August 2, 1985 (HCAR No. 23782), the Commission authorized certain amendments to a Foreign Bank Loan Agreement among SERI, Credit Suisse First Boston Limited, as agent, and the banks listed therein ("Foreign Banks") and to a Domestic Bank Loan Agreement among SERI, Manufacturers Hanover Trust Company and Citibank, N.A., as agents ("Domestic Agents") and the banks listed therein ("U.S. Banks"). The Foreign and U.S. Banks have consented to the deferral by SERI of payment of installments under the loan agreements ("Deferred Installments"), one in the amount of $125 million due September 1, 1987 under the Domestic Bank Loan Agreement, and another in the amount of $47,250,000 due August 5, 1987 under the Foreign Bank Loan Agreement. Payment of the Deferred Installments is to take place, at the earliest, within specified periods of time following certain possible events. The latest date on which such payment could be made is December 15, 1987.

In connection with these deferrals, SERI seeks approval for amendments to the bank loan agreements concerning (i) fees, (ii) additional interest, (iii) the allocation of proceeds from new issuance of SERI debt and equity securities to the Deferred Installments, (iv) certain restrictions on the declaration or payment by SERI of dividends on its capital stock (excluding dividends on its preferred stock, its preference stock and its common shares, so long as there is no event of default under the bank loan agreements), (v) certain restrictions on the redemption or purchase by SERI of its first mortgage bonds, and (vi) approval by the Domestic Agents of a trust company or bank in Mississippi into which SERI may deposit on a monthly basis an amount equal to revenues collected by MP&L from its customers for its share of the costs of the Grand Gulf nuclear unit after June 1, 1987, as authorized in connection with certain guarantees by SERI and MSU bonding arrangements by order of the Commission dated September 10, 1987 (HCAR No. 24458).

Energy Credit Insurance Limited, et al. (70-7388)

Energy Credit Insurance Limited

("ECIL"), P.O. Box 1262, Hamilton 5, Bermuda, New England Power Company ("NEPCO"), 25 Research Drive, Westborough, Massachusetts 01581, an electric utility company subsidiary of New England Electric System ("NEES"), a registered holding company, The Connecticut Light and Power Company ("CL&P"), Selden Street, Berlin, Connecticut 06037, and Western Massachusetts Electric Company ("WMECO"), 174 Brush Hill Avenue, West Springfield, Massachusetts 01089, two electric utility company subsidiaries of Northeast Utilities ("Northeast"), a registered holding company, Montaup Electric Company ("Montaup"), P.O. Box 2333, Boston, Massachusetts, an electric utility company subsidiary of Eastern Utilities Associates ("EUA"), a registered holding company, and EUA Power Corporation ("EUA Power"), Utility Park, P.O. Box 719, 111 Amherst Street, Manchester, New Hampshire 03105, a subsidiary of EUA organized to hold ownership interest in several nuclear electric generating facilities, have filed an application pursuant to sections 2(a)(8), 9(a), and 10 of the Act.

ECIL is a Bermuda corporation organized initially to provide decommissioning fund insurance coverage to four New England nuclear electric generating facilities owned or sponsored in part by NEPCO, CL&P, Montaup, WMECO and EUA Power. ECIL proposes to insure Yankee Atomic Power Company, Vermont Yankee Atomic Power Corporation, Maine Yankee Atomic Power Company, and Connecticut Yankee Atomic Power Company (collectively, "the Yankee plants") against the risk of their sponsors becoming insolvent and failing to provide for their proportionate share of decommissioning cost obligations. The record also states that ECIL may consider offering comparable insurance in connection with other utility joint-ventures where credit risks of individual participants are a concern.

NEPCO, WMECO, CL&P and Montaup propose to acquire 100 shares each of ECIL's Class A voting stock $1 par value. Based upon their percentage ownership interests in the Yankee plants, NEPCO, CL&P, WMECO and Montaup propose to acquire ECIL's Class B non-voting stock $1 par value in respective amounts of 52,507, 13,933, 57,710 and 11,159 shares. ECIL's proposed capital structure is 10,000 shares of authorized Class A voting stock $1.00 par value and 500,000 shares of authorized Class B non-voting stock $1.00 par value.

Stock subscription in ECIL will initially be limited to 13 subscribers. The applicants state that Class A voting stock will be equally divided among the 13 subscribers and that NEPCO, CL&P, WMECO and Montaup each will hold a 7.7% voting stock interest in ECIL.

Premiums would be paid by the Yankee plants. The proposed aggregate initial premium contribution is $1,103,000, based upon the applicants' best estimate of decommissioning costs. It is stated that such costs are ultimately unknown. Funds in the corporation will be invested according to standards mutually developed between the subscribers of the corporation and will be subject to Bermuda regulatory jurisdiction.

As Class A voting shareholders, NEPCO, CL&P, WMECO and Montaup each may appoint a representative to ECIL's board of directors. Each representative will be issued one share of Class A voting stock as required by Bermuda law; NEPCO, CL&P, WMECO, Montaup, and perhaps EUA Power propose to acquire the beneficial interest of the shares issued to their directors.

The applicants may in the future also insure the Seabrook and Millstone II nuclear generating facilities as well as the Yankee plants. In that event, EUA Power Corporation would acquire all of Montaup's Class A voting and Class B non-voting stock, and additional Class B non-voting stock for a total of 100 shares of Class A voting and 32,236 shares of Class B non-voting stock.

Northeast, will become an indirect holder of 15.4% of ECIL's Class A voting stock through the proposed acquisitions of its subsidiaries, CL&P and WMECO. The applicants request an order under section 2(a)(8) of the Act declaring that ECIL is not a subsidiary of Northeast, because, among other reasons: (i) Northeast would only appoint 2 out of 13 directors on ECIL's board, (ii) Northeast could vote only 15.4% of ECIL's closely held stock, the remaining voting stock being equally held and voted by 11 parties; and (iii) ECIL's management and policy decisions are assertedly subject to alternative regulation by state and foreign governments and by the Federal Energy Regulatory Commission.

For the Commission, by the Division of Investment Management, pursuant to delegated authority.

Jonathan G. Katz,

Secretary.

[FR Doc. 87-21900 Filed 9-22-87; 8:45 am]

BILLING CODE 8010-01-M

DEPARTMENT OF STATE

[Public Notice CM-8/1115]

Study Group 5 of the U.S. Organization for the International Radio Consultative Committee (CCIR); Meeting

The Department of State announces that Study Group 5 of the U.S. Organization for the International Radio Consultative Committee (CCIR) will meet on October 20, 1987 in the First Floor Theater of the COMSAT Building, 950 L'Enfant Plaza SW., Washington, DC. The meeting will begin at 9:30 a.m.

Study Group 5 deals with propagation of radio waves (including radio noise) at the surface of the earth, through the non-ionized regions of the earth's atmosphere, and in space where the effect of ionization is negligible. The purpose of the meeting is to receive and approve documents in preparation for the international meeting of Study Group 5 in 1988.

Members of the general public may attend the meeting and join in the discussions subject to instructions of the Chairman. Admittance of public members will be limited to the seating available. Requests for further information should be directed to Mr. Richard Shrum, State Department, Washington, DC 20520; telephone (202) 647-2592.

Richard E. Shrum,

Chairman, U.S. CCIR National Committee.

Date: September 10, 1987.

[FR Doc. 87-21889 Filed 9-22-87; 8:45 am]

BILLING CODE 4710-07-M

DEPARTMENT OF TRANSPORTATION

[Order 87-9-41; Dockets 45028, 45067, and 45070]

London-Frankfurt Exemption Proceeding; Statement of Tentative Findings and Conclusions; Order To Show Cause

AGENCY: Department of Transportation.

ACTION: Tentative decision and order to show cause (Order 87-9-41)—Dockets 45028, 45067, and 45070.

SUMMARY: The Department has tentatively selected Trans World Airlines, Inc. (TWA), to be granted an exemption under section 416(b) of the Federal Aviation Act to carry local traffic between London and Frankfurt during the next two off-peak travel seasons (October 29-May 14). Because only one additional carrier may be

selected now, the competing application of Northwest Airlines would be denied.

DATES: Objections/answers to the show cause order, Order 87-9-41, are due September 28, 1987; and replies will be due October 5, 1987.

ADDRESS: Objections, answers, and replies shall be filed in Docket 45028, addressed to the Documentary Services Division (C-55), U.S. Department of Transportation, 400 Seventh Street, SW, Room 4107, Washington, DC 20590, and shall be served on all parties in Docket 45028.

Dated: September 17, 1987.

Matthew V. Scocozza,

Assistant Secretary for Policy and International Affairs.

[FR Doc. 87-21969 Filed 9-22-87; 8:45 am]

BILLING CODE 4910-62-M

Federal Aviation Administration

Flight Service Station at La Junta, CO; Closing

Notice is hereby given that on or about September 24, 1987, the La Junta, Colorado Flight Service Station will be closed. Services to the aviation public formerly provided by this facility will be provided by the Automated Flight Service Station in Denver, Colorado. This information will be reflected in the FAA Organization Statement the next time it is issued.

(Section 313(a), 72 Stat. 752; 49 U.S.C. 1354.)

Timothy Pile,

Acting Director, Northwest Mountain Region.

Issued in Seattle, Washington, on September 11, 1987.

[FR Doc. 87-21859 Filed 9-22-87; 8:45 am]

BILLING CODE 4910-13-M

Traffic Alert and Collision Avoidance System (TCAS) Airborne Equipment, TCAS I

AGENCY: Federal Aviation Administration (FAA), DOT.

ACTION: Notice of availability of technical standand order (TSO) and request for comments.

SUMMARY: The proposed TSO-C118 prescribes the mininum performance standands that a traffic alert and collision avoidance system (TCAS) airborne equipment, TCAS I, must meet to be identified with the marking "TSO-C118."

DATE: Comments must identify the TSO file number and be received on or before December 31, 1987.

ADDRESS: Send all comments on the proposed technical standard order to:

Technical Analysis Branch, AWS-120, Aircraft Engineering Division, Office of Airworthiness—File No. TSO-C118, Federal Aviation Administration, 800 Independence Avenue SW., Washington, DC 20591

Or deliver comments to: Federal Aviation Administration, Room 335, 800 Independence Avenue SW., Washington, DC 20591.

FOR FURTHER INFORMATION CONTACT: Ms. Bobbie J. Smith, Technical Analysis Branch, AWS-120, Aircraft Engineering Division, Office of Airworthiness, Federal Aviation Administration, 800 Independence Avenue SW., Washington, DC 20591, Telephone (202) 267-9546.

Comments received on the proposed technical standard order may be examined, before and after the comment closing date, in Room 335, FAA Headquarters Building (FOB-10A), 800 Independence Avenue SW., Washington, DC 20591, weekdays except Federal holidays, between 8:30 a.m. and 4:30 p.m.

SUPPLEMENTARY INFORMATION:

Comments Invited

Interested persons are invited to comment on the proposed TSO listed in this notice by submitting such written data, views, or arguments as they desire to the above specified address. All communications received on or before the closing date for comments specified above will be considered by the Director of Airworthiness before issuing the final TSO.

How to Obtain Copies

A copy of the proposed TSO-C118 may be obtained by contacting the person under "**FOR FURTHER INFORMATION CONTACT.**" TSO-C118 references RICA/DO-197, dated March 20, 1987, for minimum performance standards, RTCA/DO-178A for the computer software requirements, and RTCA/DO-160B for the environmental standards. RTCA/DO-197, DO-178A, and DO-160B may be purchased from the Radio Technical Commission for Aeronautics Secretariat, One McPherson Square, Suite 500, 1425 K Street NW., Washington, DC 20005.

Issued in Washington, DC, on September 15, 1987.

Thomas E. McSweeny,

Manager, Aircraft Engineering Division, Office of Airworthiness.

[FR Doc. 87-21860 Filed 9-22-87; 8:45 am]

BILLING CODE 4910-13-M

DEPARTMENT OF THE TREASURY

Public Information Collection Requirements Submitted to OMB for Review

Date: September 16, 1987.

The Department of Treasury has made revisions and resubmitted the following public information collection requirement(s) to OMB for review and clearance under the Paperwork Reduction Act of 1980, Pub. L. 96-511. Copies of the submission(s) may be obtained by calling the Treasury Bureau Clearance Officer listed. Comments regarding these information collections should be addressed to the OMB reviewer listed and to the Treasury Department Clearance Officer, Room 2224, Main Treasury Building, 15th and Pennsylvania Avenue NW., Washington, DC 20220.

Internal Revenue Service

OMB Number: 1545-0074.

Form Number: 1040.

Type of Review: Resubmission.

Title: U.S. Individual Income Tax Return.

Description: This form is used by individuals to report their income tax and compute their correct tax liability. The data is used to verify that the items reported on the form are correct and are also for general statistical use.

Respondents: Individuals or households.

Estimated Burden: 305,441,661 hours.

OMB Number: 1545-0121.

Form Number: 1116.

Type of Review: Resubmission.

Title: Computation of Foreign Tax Credit—Individual, Fiduciary, or Nonresident Alien Individual.

Description: Form 1116 is used by individuals (including nonresident aliens) and fiduciaries who paid foreign income taxes on U.S. taxable income, to compute the foreign tax credit. This information is used by IRS to verify the foreign tax credit.

Respondents: Individuals or households.

Estimated Burden: 637,769 hours.

Clearance Officer: Garrick Shear, (202) 535-4297, Room 5571, 1111 Constitution Avenue NW., Washington, DC 20224.

OMB Reviewer: Milo Sunderhauf, (202) 395-6880, Office of Management and Budget, Room 3208, New Executive Office Building, Washington, DC 20503.

Dale A. Morgan,

Departmental Reports Management Officer.

[FR Doc. 87-21868 Filed 9-22-87; 8:45 am]

BILLING CODE 4810-25-M

Public Information Collection Requirements Submitted to OMB for Review

Date: September 17, 1987.

The Department of Treasury has made revisions and resubmitted the following public information collection requirement(s) to OMB for review and clearance under the Paperwork Reduction Act of 1980, Pub. L. 96-511. Copies of the submission(s) may be obtained by calling the Treasury Bureau Clearance Officer listed. Comments regarding these information collections should be addressed to the OMB reviewer listed and to the Treasury Department Clearance Officer, Room 2224, Main Treasury Building, 15th and Pennsylvania Avenue NW., Washington, DC 20220.

Internal Revenue Service

OMB Number: 1545-0130.
Form Number: 1120S.
Type of Review: Resubmission.
Title: U.S. Income Tax Return for an S Corporation, Capital Gains and Losses, and Shareholder's Share of Income, Credits, Deductions, etc.—1987.
Description: Form 1120S, Schedule D (Form 1120S), and Schedule K-1 (Form 1120S) are used by an S Corporation to figure its tax liability and income and other tax-related information to pass through to its shareholders. Schedule K-1 is given to shareholders to assist them in preparing their separate income tax returns. IRS uses the information to determine the correct tax for the S Corporation and its shareholders.
Respondents: Farms, Businesses or other for profit, Small businesses or organizations.
Estimated Burden: 10,223,535 hours.

Clearance Officer: Garrick Shear, (202) 535-4297, Room 5571, 1111 Constitution Avenue NW., Washington, DC 20224.

OMB Reviewer: Milo Sunderhauf (202) 395-6880, Office of Management and Budget, Room 3208, New Executive Office Building, Washington, DC 20503.

Dale A. Morgan,
Departmental Reports Management Officer.
[FR Doc. 87-21869 Filed 9-22-87; 8:45 am]
BILLING CODE 4810-25-M

UNITED STATES INFORMATION AGENCY

A Grants Program for Private Not-for-Profit Organizations in Support of International Educational and Cultural Activities

The United States Information Agency (USIA) announces a program of selective assistance and limited grant support to non-profit activities of United States institutions and organizations in the Private Sector. The program is designed to increase mutual understanding between the people of the U.S. and other countries and to strengthen the ties which unite our societies. The information collection involved in this solicitation is covered by OMB Clearance Number 3116-0175, entitled "A Grants Program for Private, Non-Profit Organizations in Support of International Educational and Cultural Activities," announced in the **Federal Register** June 3, 1987.

Private sector organizations interested in working cooperatively with USIA on the following concept are encouraged to so indicate:

Burkina Faso: State and Local Government Project

The Office of Private Sector Programs will assist in supporting a seventeen-day study tour that will bring approximately seven officials from Burkina Faso's Ministry of State and Territorial Administration to the US to gain a better understanding of American state and local government. The Burkinabe participants will be selected by USIA representatives abroad. The project, slated for late fall or winter 1987, will emphasize the interrelationship between state and local government while familiarizing the participants with a number of civic institutions. The project will be conceived and executed by a U.S. not-for-profit institution with expertise in the field of intergovernmental affairs. The project design should also address issues in decentralized planning in the fields of education and rural transportation.

USIA is most interested in working with organizations that show promise for innovative and cost-effective programming; and with organizations that have potential for obtaining private-sector funding in addition to USIA support. Organizations must have the substantive expertise and logistical capability needed to successfully develop and conduct the above project and should also demonstrate a potential for designing programs which will have a lasting impact on their participants.

Interested organizations should submit a request for complete application materials—postmarked no later than fifteen days from the date of this notice—to the address listed below. The Office of Private Sector Programs will then forward a set of materials which contains proposal guidelines.

Office of Private Sector Programs, Bureau of Educational and Cultural Affairs, United States Information Agency, 301 4th Street SW., Washington, DC 20547.

Dated: August 18, 1987.

Robert Francis Smith,
Director, Office of Private Sector Programs.
[FR Doc. 87-21877 File 9-22-87; 8:45 am]
BILLING CODE 8230-01-M

UNITED STATES INSTITUTE OF PEACE

Topic and Rules of the National Peace Essay Contest 1987-88

ACTION: Notice.

SUMMARY: The United States Institute of Peace is a national, independent, nonprofit corporation, established by Title XVII of the Defense Authorization Act of 1985, Pub. L. 98-525 (Oct. 19, 1984), codified at 22 U.S.C. 4609(a). With this notice, the Institute announces the formal launching, on October 1, 1987, of its annual essay contest at the high school level. In September, materials on the contest will be mailed to all public and private high schools throughout the United States and to Overseas Dependent Schools. This year's contest topic concerns the relationship between human rights and international peace. Essays are limited to 1,500 words and, to be eligible, must be published in an official high school publication between October 15, 1987 and March 1, 1988. Winners will be selected at state and equivalent-unit levels and at the national level and will receive college scholarships; their sponsoring publications will receive special award certificates.

FOR FURTHER INFORMATION CONTACT: Dr. Kenneth M. Jensen, National Peace Essay Contest, United States Institute of Peace, P.O. Box 27720 Central Station, Washington, DC 20038-7720, telephone (202) 789-5700.

Topic and Rules

Following are the topic and rules for the National Peace Essay Contest 1987-88. The Institute welcomes public comment.

National Peace Essay Contest 1987-88 Official Topic

In preparing to write your essay, consider the meaning and significance of this statement:

The participating States recognize the unusual significance of human rights and fundamental freedoms, respect for which is an essential factor for the peace, justice and well-being necessary to ensure the development of friendly relations and co-operation among themselves as among all States. . . . The participating States reaffirm the universal significance of respect for and effective exercise of equal rights and self-

determination of peoples for the development of friendly relations among themselves as among all States.

This statement comes from the Final Declaration of the 1975 Conference on Security and Co-Operation in Europe. We know the document produced by this conference by another name: the Helsinki Accords. Principles 7 and 8 of these now famous Accords (from which the quotation above is taken) pledge their signatories to observe universal standards of human rights, fundamental freedoms, and self-determination. Thirty-five nations, including the United States and the Soviet Union, signed the Helsinki Accords.

In an essay that does not exceed 1,500 words in length, examine the relationship between (a) peace and (b) human rights, fundamental freedoms, and self-determination of peoples as affirmed in the Helsinki Final Act quoted above.

Official Contest Rules

The National Peace Essay Contest is governed by the following rules:

Rule 1: The Topic

All essays submitted for judging must address the contest topic as presented in the official National Peace Essay Contest brochure. Essays on other topics will not be accepted.

Rule 2: Eligibility of Student Essays

The National Peace Essay Contest is open to student contributors to U.S. public and private high school newspapers, literary magazines, and similar publications that are officially recognized by their school as school-sponsored or otherwise officially recognized school activities. Such publications must have an officially designated faculty adviser, and that adviser must be responsible for assuring that submissions from his or her publication are the fruit of the student writer's own thought and writing. Special publications may be created for the purpose of publishing contest essays. However, such publications must obtain official recognition from their schools and have an officially designated faculty adviser. High school publications that serve more than one school or serve a school district or number of school districts are also eligible sponsors of National Peace Essay Contest entries. A high school is defined as an accredited public or private school that gives instruction in grades 9, 10, 11, and 12 in any combination. Only essays published in official United States high school student publications between October 15, 1987, and March 1, 1988, will be accepted.

Rule 3: Further Eligibility Requirements

All contributors deemed eligible under Rule 1 above must, in addition, be students duly enrolled during academic 1987–1988 in the public or private high school (or school district or districts) at which the student publication in which their essays appear is an officially recognized activity. Contributors need not be United States citizens; however, they must attend public or private high schools in the United States, the District of Columbia, the combined territories of the United States, or Overseas Dependent Schools. No child or other relative of a member of the Board or Staff of the United States Institute of Peace will be eligible for a contest prize, nor will any child or relative of any official or employee of any organization that may assist the Institute in the prosecution of the contest be eligible for a contest prize.

Rule 4: Number of Submissions

Each individual contestant may submit only one essay for judging. There will be no limit on the number of submissions that may come from any one publication or high school, provided that those submissions have been published between October 15, 1987, and March 1, 1988.

Rule 5: Registration of Student Publications

Any student publication wishing to sponsor the essay submissions of student authors must register its intent to take part in the National Peace Essay Contest by filling out an official Contest Registration Form for High School Publications no later than February 15, 1988. Registration will not commit such student publication to present essays; however, no essay will be accepted if the publication in which it appears has not filled out a Contest Registration Form.

Rule 6: Length and Character of Submission

Each submission shall be an original essay of no more than 1,500 words in length. An essay is defined as an analytical literary composition dealing with its subject from a personal point of view (Webster's Ninth New Collegiate Dictionary). Stories, poetry, or other litrary forms will not be accepted.

Rule 7: Authenticity, Attribution, and Plagiarism

Each submission shall be a piece of original thinking, research, composition, and writing on the relationship between human rights, fundamental freedoms, and the self-determination of peoples, and international peace. Each student contributor certified by his own attestation and that of the supervising or advising faculty member assigned to the publication in which the contribution appears shall be deemed to have done all work on the manuscript version of his or her essay, including typing or handwriting.

Customary proprieties regarding attribution of quotations and the arguments and ideas of others shall be scrupulously observed. Plagiarism and other evidence that an entry is not entirely the work of its author will result in the disqualification of the entrant. Plagiarism is defined as the act of presenting the statements and ideas of another as one's own.

Rule 8: Forms of Submission and the Contestant Information and Certification Form

Each contestant essay shall be submitted in two forms:

A. A double-spaced, typed—or neatly handwritten in ink—manuscript copy on 8½ by 11 inch paper. This manuscript must be the original version of the essay as submitted to the publication in which it has appeared. This is the version of the essay that will be judged.

B. A photocopy of the essay as it appears in the official high school publication. This version of the essay may be edited by others to meet the standards of the publication in which it is published. The published version of the essay will not be judged.

Each essay submitted shall be accompanied by a completed Contestant Information and Certification Form, a copy of which is included in the official National Peace Essay Contest brochure. Using this form, entrants and faculty advisers must provide certification of truthful statements and of originality and authenticity. The form also contains a release agreement that must be signed both by the contestant and faculty adviser or supervisor of the publication from which the submission comes permitting the Institute to publish, disseminate, and otherwise use winning essays at its own discretion.

Rule 9: To Whom to Mail and Submission Deadline

Essay submissions in both manuscript and published form, as described above and with attached Contestant Information and Certification Form, shall be submitted by first-class mail to the National Peace Essay Contest, United States Institute of Peace, P.O. Box 27720 Central Station, Washington,

DC 20038–7720, and postmarked no later than March 15, 1988. Submissions become the property of the United States Institute of Peace and cannot be returned.

Rule 10: Judging Criteria

The contest judges will read and evaluate only the manuscript versions of the essays submitted. However, no essay will be passed along to the judges unless a photocopy of the published version is provided as evidence of publication.

Essays will be judged for their knowledgeability and depth of understanding, originality, intellectual and analytical quality, and style. No political or ideological test shall be part of the criteria for making awards.

Rule 11: Judging and Awards

Official contest judging shall be done on the state (or equivalent unit) and national levels only. School publications, schools, and school districts are welcome to judge essays and make awards; however, such judging will not prejudice judging at the state (or equivalent unit) and national levels. Such judging shall not be used to restrict the number of submissions from a given publication, school or school district, and will not be part of the official contest. No student who wishes to make a submission of his or her published essay to the National Peace Essay Contest shall be denied that right by dint of failing to win, or of winning, a local publication, school or school district prize.

All judging on the state (or equivalent unit) and national levels of the competition will be done under the direction and supervision of the Board of Directors of the United States Institute of Peace. All decisions of the judges will be final. The United States Institute of Peace reserves the right to present no award or to limit the number of awards for any given state (or equivalent unit) in the event it deems that an unsufficient number of meritorious entries has been received.

All submissions postmarked on or before March 15, 1988, will be separated into lots by state or equivalent unit and forwarded to the contest judges. The judges will evaluate each lot of state (or equivalent unit) essays and choose first-, second-, and third-place state (or equivalent unit) winners. The first-place essay from each state will be automatically entered in the national competition and will be eligible for first-, second-, and third-place national awards.

State (or equivalent unit) first-, second-, and third-place individual winners will receive college scholarships of $250, $150, and $100, respectively. State first-place winners will also receive an all-expense-paid round trip to Washington, DC for the weekend of June 18–19, 1988. National first-, second-, and third-place individual winners will receive college scholarships of $5,000, $2,500, and $1,000, respectively. State and national individual winners will receive special award certificates suitable for framing. Publications sponsoring winning state (or equivalent unit) first-, second-, and third-place entries will receive special award certificates from the United States Institute of Peace. Publications sponsoring winning national first-, second-, and third-place entries will receive additional special award certificates.

State (or equivalent unit) first-, second-, and third-place winners and their sponsoring high school publications will be notified by mail or telephone on or about May 15, 1988. Prizes will be awarded to state (or equivalent unit) first-place and national individual winners in Washington, DC, on June 18–19, 1988. In the event that a prize winner is unable to travel to Washington, his or her prize will be awarded by mail. Certificates for student publications in which winning state (or equivalent unit) and national essays have appeared will be awarded through their schools by mail on or about July 1, 1988. All contestants and sponsoring high school publications will receive certificates of participation on or about August 1, 1988.

Dated: September 3, 1987.

Robert F. Turner,

President, United States Institute of Peace.

[FR Doc. 87–21879 Filed 9–22–87; 8:45 am]

BILLING CODE 21879

Sunshine Act Meetings

Federal Register
Vol. 52, No. 184
Wednesday, September 23, 1987

This section of the FEDERAL REGISTER contains notices of meetings published under the "Government in the Sunshine Act" (Pub. L. 94-409) 5 U.S.C. 552b(e)(3).

CONSUMER PRODUCT SAFETY COMMISSION

TIME AND DATE: 10:00 a.m., Friday, September 25, 1987.

LOCATION: Room 556, Westwood Towers, 5401 Westbard Avenue, Bethesda, Md.

STATUS: Open to the Public.

MATTERS TO BE CONSIDERED:

Fire Safety Report [1]

Philip Schaenman of Tri Data Corporation will brief the Commission on a report entitled, "Overcoming Barriers to Public Fire Safety Education."

FOR A RECORDED MESSAGE CONTAINING THE LATEST AGENDA INFORMATION, CALL: 301-492-5709.

CONTACT PERSON FOR ADDITIONAL INFORMATION: Sheldon D. Butts, Office of the Secretary, 5401 Westbard Ave., Bethesda, Md. 20207 301-492-6800.

Sheldon D. Butts,
Deputy Secretary.
September 21, 1987.

[FR Doc. 87-22045 Filed 9-21-87; 1:14 pm]
BILLING CODE 6355-01-M

[1] The Commission voted to waive its policy concerning participation by outside parties in Commission meetings for this matter.

NATIONAL TRANSPORTATION SAFETY BOARD

TIME AND DATE: 9:30 a.m., Tuesday, September 29, 1987.

PLACE: Board Room (Room 812A), Eighth Floor, 800 Independence Avenue, SW., Washington, DC 20594.

STATUS: The first five items will be open to the public. The last two items will be closed under Exemption 10 of the Government in the Sunshine Act.

MATTERS TO BE CONSIDERED:

1. Hazardous Materials Accident Investigation Report—Hazardous Materials Release, Baltimore and Ohio Railroad Company Train No. SLFR, Miamisburg, Ohio, July 8, 1986.
2. Marine Accident Report—Explosion and fire Aboard the U.S. Tank Barge STC 410 at the Steuart Petroleum Company Facility, Piney Point, Maryland, December 20, 1986.
3. Safety Study—Emergency Medical Service Helicopter Operations.
4. Recommendations to FAA re Flight Restrictions over Hazardous Materials Spills and Other Disasters (Calendared by Members Nall and Kolstad.)
5. Recommendation to FAA re Requirement for Test of Takeoff Warning System Before Every Flight on all Air Carrier Airplanes Equipped with Takeoff Warning Systems. (Calendared by Chairman.)
6. Opinion and Order: Administrator v. Winslow, Docket SE-7527; disposition of the appeals of both parties. (Calendared by Vice Chairman.)
7. Opinion and Order: Administrator v. Hunt, Docket SE-7350; disposition of the appeals of both parties. (Calendared by Chairman.)

FOR MORE INFORMATION, CONTACT: Bea Hardesty, (202) 382-6525.

Bea Hardesty,
Federal Register Liaison Officer.
September 18, 1987.

[FR Doc. 87-22027 Filed 9-21-87; 11:21 am]
BILLING CODE 7533-01-M

POSTAL SERVICE BOARD OF GOVERNORS

The Board of Governors of the United States Postal Service, pursuant to its Bylaws (139 CFR 7.5) and the Government in the Sunshine Act (5 U.S.C. 552b), hereby gives notice that it intends to hold a meeting at 8:00 a.m. on Tuesday, October 6, 1987, in Room 1516-A, 90 Church Street Station, New York, New York. The meeting is open to the public. The Board expects to discuss the matters stated in the agenda which is set forth below. Requests for information about the meeting should be addressed to the Secretary of the Board, David F. Harris, at (202) 268-4800.

There will also be a session of the Board on Monday, October 5, 1987, but it will consist entirely of briefings and is not open to the public.

Tuesday Session

October 6, 1987—8:00 a.m.

1. Minutes of the Previous Meeting, August 31-September 1, 1987.
2. Remarks of the Postmaster General.
3. Office of the Governors' Operating Budget.
4. Status of CSRS/FERS Retirement Programs.
5. Review of Capital Investment Program.
6. FY 1988 Borrowing.
7. Consideration of Filing with Postal Rate Commission for Classification Changes to Limit Money Order Sales.
8. Consideration of Request to Implement Temporary Classification Changes Expanding Merchandise Return Service.
9. Report on Facilities and Supply Group Programs.
10. Review of Legislative Matters and Government Relations.
11. Consideration of 1988 Schedule of Board of Governors' Meetings.
12. Tentative Agenda for November 2-3, 1987, Meeting in Washington, DC.

David F. Harris,
Secretary.

[FR Doc. 87-22059 Filed 9-21-87; 2:41 pm]
BILLING CODE 7710-12-M

Corrections

Federal Register
Vol. 52, No. 184
Wednesday, September 23, 1987

This section of the FEDERAL REGISTER contains editorial corrections of previously published Presidential, Rule, Proposed Rule, and Notice documents and volumes of the Code of Federal Regulations. These corrections are prepared by the Office of the Federal Register. Agency prepared corrections are issued as signed documents and appear in the appropriate document categories elsewhere in the issue.

ENVIRONMENTAL PROTECTION AGENCY

[OPP-30220C/30226B; FRL-2349-7]

Approval of Pesticide Product Registrations; Ciba-Geigy Corp.

Correction

In notice document 87-18946 appearing on page 31084 in the issue of Wednesday, August 19, 1987, make the following corrections:

1. In the second column, in the **SUPPLEMENTARY INFORMATION**, in the 10th line, "Insecticide" was misspelled; in the 12th line, "isazophos" was misspelled.

2. In the same column, in the second paragraph of the **SUPPLEMENTARY INFORMATION**, in the fifth line, "if" should read "is".

3. In the third column, in the 10th line, "us" should read "use".

BILLING CODE 1505-01-D

FEDERAL COMMUNICATIONS COMMISSION

[MM Docket No. 87-3212; File Nos. BPCT-870304KF et al.]

Applications for Consolidated Hearing; Mack D. Blair

Correction

In notice document 87-20793 beginning on page 34295 in the issue of Thursday, September 10, 1987, make the following correction:

On page 34295, in the third column, in the table of applications, under "MM Docket No.", the first entry should read "87-342".

BILLING CODE 1505-01-D

FEDERAL COMMUNICATIONS COMMISSION

[MM Docket No. 87-344; File Nos. BP-860402AF et al.]

Applications for Consolidated Hearing; John A. McAulay

Correction

In notice document 87-20794 appearing on page 34296 in the issue of Thursday, September 10, 1987, the docket number should read as it appears in the heading above.

BILLING CODE 1505-01-D

DEPARTMENT OF HEALTH AND HUMAN SERVICES

Social Security Administration

20 CFR Part 416

[Regulations No. 16]

Supplemental Security Income for the Aged, Blind, and Disabled; Residence and Citizenship

Correction

In rule document 87-21167 beginning on page 34772 in the issue of Tuesday, September 15, 1987, make the following corrections:

1. On page 34773, in the first column, in amendatory instruction 2, in the first line, "2942" should read "21942".

§ 416.1618 [Corrected]

2. On the same page, in the same column, in § 416.1618(b), in the 12th line, "allow" should read "allows"; and in the last line, "provide" should read "provides".

BILLING CODE 1505-01-D

federal register

Wednesday
September 23, 1987

Part II

Environmental Protection Agency

40 CFR Parts 124, 264, and 270

Permit Modifications for Hazardous Waste Management Facilities; Proposed Rule

ENVIRONMENTAL PROTECTION AGENCY

40 CFR Parts 124, 264, and 270

[FRL-3220-2]

Permit Modfications for Hazardous Waste Management Facilities

AGENCY: Environmental Protection Agency (EPA).

ACTION: Proposed rule.

SUMMARY: The U.S. Environmental Protection Agency (EPA) today proposes to amend its regulations under the Resource Conservation and Recovery Act (RCRA) governing modifications of hazardous waste management permits. This proposed rule would establish new procedures that apply to the various types of changes that facility owners and operators may want to make at their facilities. Today's proposal is based on a negotiated agreement between EPA, members of the regulated community, and representatives of State agencies and public interest groups. EPA is proposing to categorize all permit modifications into three classes and establish administrative procedures for approving modifications in each of these classes. The purpose of these proposed amendments is to provide both owners and operators and EPA more flexibility to change specified permit conditions, to expand public notification and participation opportunities, and to allow for expedited approval if no public concern exists for a proposed permit modification.

DATE: Comments must be received on or before November 23, 1987.

ADDRESSES: The public must submit an original and two copies of their comments to: EPA RCRA Docket (S-212) (WH-562), 401 M Street, SW., Washington, DC 20460.

Place "Docket number F-87-PMHP-FFFFF" on your comments. The OSW docket for this proposed rulemaking is located in the sub-basement at the above address, and is open from 9 00 a.m. to 4 00 p.m., Monday through Friday, excluding Federal holidays. The public must make an appointment by calling (202) 475-9327 to review docket materials. The public may copy a maximum of 50 pages of material from any one regulatory docket at no cost; additional copies cost $0.20 per page.

FOR FURTHER INFORMATION CONTACT: RCRA hotline at (800) 424-9346 (in Washington, DC call 382-3000) or Frank McAlister, Office of Solid Waste (WH-563), U.S. Environmental Protection Agency, Washington, DC 20460, telephone (202) 382-2223.

SUPPLEMENTARY INFORMATION:

Preamble Outline

I. Authority
II. Background
A. Current Permit Modification Requirements
B. Need for Revisions to Modification Process
C. Recent Proposed Changes
D. Regulatory Negotiation
III. Summary of Proposed Approach
IV. Discussion of Proposed Rule Language
A. Modification, Revocation, and Reissuance of Permits
B. Procedures for Class 1, 2, and 3 Modifications
1. Class 1 Modifications
2. Class 2 Modifications
3. Class 3 Modifications
4. Temporary Authorizations
5. Other Modifications
6. Permit Modification Appeals
7. Newly Listed or Identified Wastes
8. Publication of Permit Modification List
C. Classification of Permit Modifications
1. General Permit Provisions
2. General Facility Standards
3. Ground-Water Protection
4. New Wastes in a Unit
5. General Approach to Defining Unit-Specific Changes
i. Tanks and Containers
ii. Surface Impoundments
iii. Waste Piles
iv. Landfills
v. Land Treatment
vi. Incinerators
6. Closure
7. Post-Closure
8. HSWA Corrective Action
D. Conforming Changes to Permitting Regulations
V. Other Issues
A. Permit Modification Form
B. Technical Review and Public Education Fund
VI. State Authority
A. Applicability of Rules in Authorized States
B. Effect on State Authorizations
VII. Effective Date
VIII. Regulatory Analysis
A. Regulatory Impact Analysis
B. Regulatory Flexibility Act

I. Authority

These regulations are proposed under the authority of section 2002(a), 3004, 3005, and 3006 of the Resource Conservation and Recovery Act, as amended, 42 U.S.C. 6912(a), 6924, 6925, and 6926.

II. Background

Subtitle C of the Resource Conservation and Recovery Act (RCRA) creates a "cradle-to-grave" management system designed to ensure that hazardous waste is identified and properly transported, stored, treated, and disposed of. Subtitle C requires EPA to identify hazardous waste and promulgate standards for generators and transporters of such wastes. Under section 3004 of RCRA, owners and operators of treatment, storage, and disposal facilities are required to comply with standards "necessary to protect human health and the environment." These standards are generally implemented initially through interim status standards and later through permits issued under authorized State programs or by EPA.

Under section 3005(a) of RCRA, all treatment, storage, and disposal of hazardous waste is prohibited except in accordance with a permit that implements the section 3004 standards. However, recognizing that the issuance of permits can be time-consuming, Congress created "interim status" for facilities in existence on the effective date of EPA's permitting regulations (November 19, 1980) or on the effective date of statutory or regulatory changes that subject a facility to the RCRA permit requirement. Under section 3005(e), owners and operators of hazardous waste treatment, storage, and disposal facilities in existence on the applicable date who submitted a Part A permit application and complied with section 3010 notification requirements are treated as having been issued permits until an authorized State or EPA takes final administrative action on their permit applications.

A facility with a permit or interim status may change its waste management operations only under certain conditions, specified in EPA's regulations on permit modifications (40 CFR 270.41 and 270.42) and changes in interim status (40 CFR 270.72). Today's proposal revises the regulations governing permit modifications by providing both owners and operators and EPA more flexibility to change specified permit conditions, while at the same time expanding public notification and participation opportunities.

A. Current Permit Modification Requirements

The hazardous waste management regulatory system established by EPA on May 19, 1980, recognized that permits issued to treatment, storage, or disposal facilities would need to be modified for various reasons during the life of the permit (normally ten years). Accordingly' the Agency established two different processes for modifying permits: major and minor modifications. The majority of permit changes follow the major modification procedures, including development of a draft permit, public notice, and opportunity for a public hearing as required under 40 CFR Part 124. (*See* § 270.41.) These

procedures are the same as for initial permit issuance. However, for permit modifications, the scope of the public review is limited to the specific permit conditions being modified.

The current minor modification regulations are set forth in § 270.42. They allow EPA or authorized States to make a limited set of minor changes in RCRA permits with the consent of the permit holder, but without following the procedures of 40 CFR Part 124. A minor modification may only:

- Correct typographical errors.
- Require more frequent monitoring by the permittee.
- Change an interim compliance date in a compliance schedule, as long as the new date is not more than 120 days after the date in the existing permit.
- Allow for a change in ownership or operational control of a facility.
- Change the lists of facility emergency coordinators or equipment in the permit's contingency plan.
- Change the estimate of maximum inventory of hazardous wastes in treatment or storage.
- Change the estimates of expected year of closure or schedules for final closure in the closure plan.
- Approve a longer period for closure activities, if specified criteria are met.
- Make minor changes in permit operating requirements to reflect the results of a trial burn.
- Make minor changes in permit operating requirements for conducting a trial burn.
- Grant one extension in the time period for determining operational readiness after completion of construction.
- Make minor changes in the treatment program requirements for land treatment units to improve treatment of hazardous constituents.
- Make minor changes in conditions specified for land treatment units to reflect the results of field tests or laboratory analyses used in making a treatment demonstration.
- Allow a second treatment demonstration for land treatment, under specified circumstances, provided that the conditions for a second demonstration are substantially the same as those for the first demonstration.
- Allow treatment of a hazardous waste not previously specified in the permit if the waste has been prohibited from land disposal and if certain conditions regarding the management of the waste are met.
- Allow changes at a facility to treat or store restricted wastes in tank and container units not previously specified in the permit, pending subsequent approval as a major modification.

Any permit modifications not included on this list are major modifications.

This list of minor modifications is the result of several separate rulemakings. The May 19, 1980 regulations included the first five minor modifications listed above (45 FR 33430). Subsequent minor modifications were added as follows: (1) January 12, 1981, three minor modifications were identified regarding closure activities (46 FR 2889); (2) June 24, 1982, three minor modifications were added for incinerator permits (47 FR 27520); (3) July 26, 1982, three minor modifications were listed for land treatment permits (47 FR 32369); (4) November 7, 1986, a minor modification was specified to allow the addition of land disposal restricted wastes to the permit for purposes of treatment in permitted units (51 FR 40653); and (5) July 8, 1987, a minor modification was established to allow the addition of tanks and containers for treatment and storage of land disposal restricted wastes, pending subsequent approval as a major modification (52 FR 25760).

B. Need for Revisions to Modification Process

In the preamble to the May 19, 1980 regulations that established the current permit modification requirements, the Agency acknowledged that there may be cases where additional facility changes should be treated as minor modifications. However, at that time the Agency concluded:

> Because there is no experience with the RCRA permit program yet, EPA lacks the information necessary to determine which changes in methods or hazardous wastes would really be minor and which would not be minor. (*See* 45 FR 33317.)

After several years of experience with permitted facilities, EPA and authorized States have found that in many cases the current permit modification regulations are unnecessarily restrictive and seriously hamper the implementation of the permitting program. EPA has found that the modification procedures are time-consuming and resource-intensive, even for routine and administrative tasks. Simple permit modifications, such as a change in the name of the emergency coordinator, require significant paperwork on the part of EPA and in some cases entail a delay in implementation, because of low Agency priority. In addition, "major" modifications, some of which are trivial, require the full permit issuance procedures, including preparation of a draft permit modification, public notification, a 45-day comment period, and the opportunity for a hearing. Major modifications, which can range from building a roof over a storage area to adding a new incinerator to a facility permit, can take six months to a year for approval. The result of this situation has been to delay or discourage facility changes, many of which would lead to improved management of wastes.

The Agency believes that permits must be viewed as living documents that can be modified to allow facilities to make technological improvements, comply with new environmental standards, respond to changing waste streams, and generally improve waste management practices. Since permits are usually written to encompass a ten-year period of operation, the facility or the permit writer cannot anticipate all or even most of the administrative, technical, or operational changes that will be required over the permit term for the facility to maintain an up-to-date operation. Therefore, permit modifications are inevitable. In fact, EPA estimates that a typical permit may have to be modified two or three times a year.

In the past several years, EPA, States, permittees, and members of the public have recognized that current procedures must be revised to allow greater flexibility in modifying permits. The need for greater flexibility is becoming increasingly important as more permits are issued (particularly in response to the permitting deadlines specified in the Hazardous and Solid Waste Amendments (HSWA) of 1984), leading to a corresponding increase in demand for permit modifications. In addition, regulatory developments will increase the demand for permit modifications. For example, recent and upcoming land disposal restrictions on untreated wastes will force hazardous waste facilities to move away from disposal practices to hazardous waste treatment. If permitted facilities are not able to make these changes readily, EPA could be forced to delay the effective date of some aspects of the land disposal restrictions program because of the lack of national capacity. As another example, in response to HSWA and other initiatives, EPA is in the process of identifying and listing new hazardous wastes. Permitted facilities will require permit modifications to handle these new wastes—even if they were already handling the wastes at the time of listing. If permit modifications cannot be readily made, the operation of these facilities will be severely disrupted.

For these reasons, the demand for permit modifications will increase substantially over the next few years.

Unless EPA improves the permit modification procedures, significant EPA (and permit holder) resources will be spent on making trivial or environmentally irrelevant changes to permits, and will be diverted from more important tasks. More important, perhaps, improvements in the handling and treatment of hazardous waste will be delayed, and the regulated community will find itself frozen by rigid permit conditions. The net result of this situation will be an increased threat to human health and the environment and an increased shortfall in hazardous waste treatment, storage, and disposal capacity.

C. Recent Proposed Changes

Amendments to the permit modification regulations were proposed by EPA in 1984, 1986, and 1987.

In 1980, industry and environmental groups challenged the RCRA permitting rules, as well as other hazardous waste regulations (*NRDC et al.* v. *U.S. EPA*, No. 80-1607 and consolidated cases (D.C. Circuit)). Industry groups argued, among other points, that the range of causes for minor modifications was too narrow and would significantly complicate and delay trivial facility changes. As part of a broader settlement between EPA and the industry and environmental groups, EPA agreed to propose an expanded list of minor modifications. The expanded list, which was proposed on March 15, 1984 (49 FR 9850), defined three additional areas in which minor permit modifications could be made: (1) Modifications to various plans contained in the permit; (2) the addition of new wastes at the facility under certain circumstances; and (3) the use of new treatment techniques in certain units.

The rule did not provide a definition of "minor" in each of these areas. Instead, EPA or the authorized State would have discretion in determining whether a given modification was major or minor. The preamble, however, provided extensive guidance on the kinds of modifications in each of the areas that would be considered minor or major. Furthermore, as a broad policy, the preamble stated that EPA would consider a modification "minor" if it reflected a routine technical or administrative change that would have negligible impact on human health or the environment.

Response to the proposal was varied. In general, industry and State governments supported the flexibility of the proposed approach, although industry commenters suggested ways to broaden it. A coalition of environmental groups, however, strongly opposed the proposal, stating that it reflected a departure from existing public participation policy and gave too much discretion to regulating officials. Environmental commenters supported a list of minor modifications that was more narrow in scope and more specific in detail.

Because of the importance of the issue and the diverse nature of public comments, EPA decided not to issue the March 1984 proposal as a final rule, but instead identified RCRA permit modifications as a project for regulatory negotiation. Negotiations on this issue are discussed in section II.D of this preamble.

Two other recent EPA rulemakings addressed permit modifications. The December 1, 1986 land disposal restriction rule (51 FR 44740) proposed to allow, as a minor modification, changes at a facility to treat or store restricted wastes in tanks and containers. This proposal was issued in final form on July 8, 1987 (52 FR 25760). In addition, on August 14, 1987 (52 FR 30570), the Agency proposed that permitted facilities may receive a minor modification to allow continued management of newly identified or listed hazardous wastes. This proposal would require the owner and operator subsequently to obtain approval of the change as a major modification, thereby invoking the public participation procedures of Part 124.

It should be noted that the amendment proposed on August 14, along with the other current minor modification provisions, will be replaced by today's proposed modification scheme if it is adopted as proposed. Nevertheless, the Agency will proceed with the August 14 proposal independent of today's proposal because of the need for expeditious permit changes for newly identified or listed hazardous wastes. The Agency recognizes that any final action taken on the August 14 proposal will most likely have only a short-term effect, pending the outcome of today's proposal.

D. Regulatory Negotiation

Today's proposed rule was developed through the process of regulatory negotiation. This process is an alternative means for developing regulations in which individuals and groups with negotiable interests directly affected by the rule work cooperatively with EPA to develop a standard by committee agreement.

In mid-1986, EPA communicated with various parties interested in developing a new approach to permit modifications, including hazardous waste generators and representatives from the waste management industry, State governments, and environmental and citizen groups. Once the appropriate affected interests had been identified, EPA established a committee under the Federal Advisory Committee Act to negotiate the provisions of the standard. The formation of the Permit Modification Negotiating Committee was announced in the **Federal Register** on July 16, 1986 (51 FR 25739).

Between September 10, 1986 and February 24, 1987, the Committee met six times to discuss a variety of technical and policy issues associated with developing a new permit modification scheme. At the final meeting on February 24, the Committee members, with one exception, reached agreement on the major provisions of the permit modification approach presented in today's proposal. One Committee member did not sign the final agreement because the member could not concur on one critical provision. That provision and the Committee members' comments on it are discussed in section IV.B.2 of this preamble.

The 18 parties who signed the agreement concurred with the new permit modification system as a whole. Inevitably, as in any negotiation, some parties may have made concessions in one area in exchange for concessions from other parties in other areas. As a result, changes in particular parts of the proposed rule could significantly affect one or more of the Committee members' support for the proposal. For this reason, the Agency has tried carefully to translate the agreement in principle into specific regulatory language. A few items that are a part of today's proposal were not addressed or resolved by the Committee. The Agency included them because it believes they are necessary to support the proposed rule. Any provision that EPA has added has been clearly identified in this preamble.

The signed Committee statement has been included in the public docket for this rule. It is available at the address listed at the beginning of this notice.

Members of the negotiating Committee and their affiliation are as follows:

Negotiators/Affiliation

1. Johan Bayer, Chemical Waste Management, Inc.
2. John Campion, Pharmaceutical Manufacturers Association
3. Lecil Colburn, American Coke and Coal Chemical Institute
4. Frank Coolick, New Jersey Bureau of Hazardous Waste Engineering
5. Gary Dietrich, ICF Corporation/ ENSCO, Inc.

6. Larry Eastep, Illinois EPA
7. Bonnie Exner, Citizen Intelligence Network
8. Richard Fortuna, Hazardous Waste Treatment Council
9. Arthur Gillen, BASF Corporation, Synthetic Organic Chemical Manufacturers Association
10. Khris Hall, IBM Corporation
11. William Hamner, North Carolina Division of Health Services
12. Minor Hibbs, Texas Water Commission
13. Gretchen Monti, League of Women Voters
14. Philip Palmer, Dupont Corporation and Chemical Manufacturers Association
15. Suellen Pirages, National Solid Waste Management Association
16. Ann Powers, Chesapeake Bay Foundation
17. Suzi Ruhl, Legal Environmental Assistance Foundation
18. Marcia Williams, U.S. EPA
19. Eleanor Winsor, Pennsylvania Environmental Council

Facilitators

John A.S. McGlennon and Peter Schneider, ERM-McGlennon Associates. Executive Secretary, Chris Kirtz, U.S. EPA.

III. Summary of Proposed Approach

The Agency is proposing to revise the regulations governing permit modifications (40 CFR 270.41 and 270.42) to introduce a permit modification process that recognizes different types or classes of modifications and assigns regulatory requirements according to type of modification. The revisions provide both owners and operators and EPA more flexibility to change specified permit conditions, expand public notification and participation opportunities, and allow for expedited approval if no public concern exists regarding a proposed change.

The Agency's proposal mainly addresses modifications requested by a permittee. It restructures §§ 270.41 and 270.42, which currently specify major and minor modification procedures, respectively, for modifications instigated by either the permittee or the Agency. The proposal would alter § 270.41 to include only modifications initiated by the authorized Agency; the current major modification procedures for these changes remain in effect. The proposal alters § 270.42 to refer only to modifications requested by the permittee.

The proposed permit modification process recognizes three classes of modifications requested by the permittee. Class 1 and 2 modifications do not substantially alter the permit conditions or reduce the capacity of the facility to protect human health and the environment. Class 1 covers routine changes, such as typographical errors or new telephone numbers. Class 2 modifications address common or frequently occurring changes needed to maintain a facility's capability to manage wastes safely or to conform with new regulatory requirements. Class 3 modifications cover major changes that substantially alter the facility or its operations.

Class 1 changes are generally allowed without prior Agency approval. Owners and operators must, however, notify the public and the authorized Agency once they have made these changes. In some cases, which are indicated in Appendix I to 40 CFR Part 270, prior Agency approval is required. The Agency may reject any Class 1 modification, with cause.

Class 2 modifications begin with a modification request to the authorized Agency, public notice by the facility owner of a modification request, an early comment period, and an informational meeting with the public. Within 90 days of submission of a request for a Class 2 modification request, the Agency must approve or deny the request extend the review period 30 days; or approve a temporary authorization for up to 180 days. If the Agency does not take action by the end of the 30-day extension, the changes specified in the modification request are automatically authorized for a period of 180 days. If the Agency has not acted by the end of the 180-day period, the changes are authorized for the duration of the permit. This "default provision," which will ensure prompt action on Class 2 modification requests, is necessary to allow facilities to respond promptly to changing conditions and to give them flexibility to address new regulatory requirements, such as the land disposal restrictions. The proposal also removes the current prohibition on preconstruction for Class 2 modifications.

Class 3 modifications are subject to the same initial public notice and meeting requirements as Class 2 modifications. However, the "default" provision of Class 2 does not apply. Furthermore, an EPA decision to grant the modification request is subject to the permit issuance procedures of 40 CFR Part 124. The Agency must prepare a draft permit modification, notify the public of the draft modification, hold a public hearing on the modification if requested, and grant or deny the request.

The Agency also proposes to change the current permit modification requirement for facilities that are handling a waste when that waste becomes newly listed or is identified as hazardous. For Class 1 modifications, facilities may make the change immediately, as long as they notify EPA and the public of the changes. For Class 2 or Class 3 modifications, the owner or operator may make the change without prior approval; however, he must submit a complete permit modification request within 180 days of the **Federal Register** publication designating the waste as hazardous.

The proposal also gives EPA the authority to grant temporary authorization, without prior public notice and comment, for activities that are necessary for facility owners and operators to respond promptly to changing conditions. Temporary authorizations, for terms ranging from 90 to 180 days, may be granted to Class 2 or Class 3 modifications that meet criteria specified in proposed § 270.42(e) Owners and operators who are granted a temporary authorization are required to notify the public. Temporary authorizations that involve "permanent" activities (i.e., activities that extend beyond 180 days) must also undergo Class 2 or Class 3 public participation procedures for permit modifications.

Specific modifications are assigned to Class 1, 2, or 3 in Appendix I to 40 CFR Part 270. If a single modification will require two or more changes in the permit, then the modification request carries the highest classification assigned to any of the changes. Permit modifications not listed in Class 1, 2, or 3 may be submitted under Class 3. Alternatively, the permittee may request a Class 1 or 2 determination from the Agency.

EPA or an authorized State must maintain a listing of all approved permit modifications and periodically publish a notice that the list is available for review.

IV. Discussion of Proposed Rule Language

A. Modification, Revocation, and Reissuance of Permits

Under current regulations, EPA may modify RCRA permits either at the request of the permittee, or, if certain criteria are met, without the permittee's approval. The negotiating Committee focused primarily on changes requested by the permittee; EPA's authority to reopen and modify permits—for example, in response to new information or new regulations—lay beyond the

scope of the Committee's attention. In revising the permit modification provisions of §§ 270.41 and 270.42, therefore, EPA has left the Agency's authority to reopen permits unchanged.

The Agency, however, is proposing to substantially restructure §§ 270.41 and 270.42 to reflect the Committee's agreement. Under this restructuring, § 270.41 would refer to permit modifications initiated by the Agency, and the current major modification procedures would remain in effect for these changes. Section 270.42 would refer to changes requested by the permittee; in this case, the permit modification classifications and procedures agreed upon by the Committee would apply.

Section 270.41, as proposed today, would identify three causes for which EPA might require a permit modification: Alterations or additions to the permitted facility or activity; new information received by the Agency; or new standards, regulations, or judicial decisions affecting the basis of permit requirements. The first two of these causes remain unchanged from the current regulatory language. The third cause—new regulations—has been revised so that it is consistent with the language EPA proposed on March 28, 1986 (51 FR 10706), which allows the Agency to reopen RCRA permits when necessary to ensure compliance with new regulatory standards. EPA intends to promulgate the 1986 proposal in the near future in a separate rulemaking.

EPA is also proposing to delete those portions of § 270.41(a)(3) that would allow permittees to request major modifications for changes made in response to new regulations or judicial decisions. These, presumably, would generally be changes in cases where EPA standards were relaxed, and the permittee wished to relax permit conditions correspondingly. Under today's proposal, permittees could still request such changes; however, they would do so in accordance with the procedures for Class 1, 2, or 3 modifications in proposed § 270.42. The effect of this proposed amendment will be to eliminate the deadlines in the current § 270 41(a)(3) by which permittees must request permit modifications in the case of new regulations or judicial decisions. Under § 270.41(a)(3), permittees must now request such modifications within 90 days after the **Federal Register** notice announcing the regulatory change or within 90 days of a judicial remand of the regulations. EPA, however, now believes that facilities should have the opportunity to make such changes at any time, as long as they are approved according to the appropriate permit modification procedures. Therefore, it is proposing to eliminate the deadlines on submission of the modification request. The Agency requests comment on this amendment, and on other alternative procedures for this category of permit modification.

Finally, EPA is proposing today to remove from § 270.41 those modifications that would be made at the request of the permittee. These include changes in compliance schedules (§ 270.41(a)(4)) and changes required by regulation, such as modification of a closure plan in accordance with § 264.112(b) or § 264.118(b) (§ 270.41(a)(5)(i)) or extension of the closure period (§ 270 41(a)(5)(ii)). These modifications are being addressed instead in proposed § 270.42, where they are categorized as Class 2 or 3 changes.

Under today's proposal, changes authorized by § 270.41 would be subject to the current major modification procedures—that is, the current procedures for permit issuance. The Agency considered adopting Class 2 or 3 procedures for these changes, but believes that such an approach would not be appropriate. The procedures developed by the Negotiating Committee are designed primarily for situations where a facility desires a change. The Agency believes that, where EPA is imposing a change on a permitted facility, the facility owner or operator should not be required by regulation to notify or meet with the public; this should be the Agency's responsibility. In addition, the default provision of Class 2 modifications makes no sense where the Agency is requiring permit modifications that the facility may be less than enthusiastic about adopting. In these cases, the Agency believes that the current major modification procedures provide an appropriate level of protection for the permittee, and reasonable opportunity for public comment. Therefore, the Agency has not amended the procedures by which it may modify a permit in the case of facility alterations, new information, or new regulations. As discussed, the Negotiating Committee did not specifically address changes of this type. The Agency solicits comment on the approach it is taking.

The Agency would like to point out that today's proposal primarily addresses the procedures for approving facility changes and for public notification and participation regarding these changes. The substantive standards that apply to the design and operation of the new activities at a facility are not affected by today's proposal. Therefore, any permit modification, whether a Class 1, 2, or 3 change, will impose the appropriate Part 264 requirements, including any new standards that are applicable to the activity (e.g., air emission standards of part 269 pursuant to section 3004(n), when promulgated).

B. Procedures for Class 1, 2, and 3 Modifications

1. Class 1 Modifications

Class 1 modifications cover changes that are necessary to correct typographical errors in the permit or routine changes to the facility or its operation. They do not substantially alter the permit conditions or reduce the facility's capacity to protect human health and the environment. Generally, these modifications include correction of typographical errors; necessary updating of names, addresses, or phone numbers identified in the permit or its supporting documents; upgrading, replacement, or relocation of emergency equipment; improvements of monitoring, inspection, recordkeeping, or reporting procedures; updating of sampling and analytical methods to conform with revised Agency guidance or regulations; updating of certain types of schedules identified in the permit; replacement of equipment with functionally equivalent equipment; and replacement of damaged ground-water monitoring wells. The specific modifications that fall into Class 1 are enumerated in Appendix I to 40 CFR Part 270. This Appendix is discussed more fully in section IV.C of this preamble.

Because Class 1 modifications do not substantially alter the permit or reduce the human health and environmental protection it provides, the Committee agreed that they do not need to be reviewed and approved in the same manner as permit applications and requests for major permit modifications. The Committee concluded that, in most cases, the permittee should be allowed to put Class 1 modifications into effect without prior approval, and should be required simply to notify EPA and the public of the changes. In other cases, the Committee agreed that prior Agency approval should be required. The modifications that would require prior Agency approval are identified with an asterisk in Appendix I.

Proposed § 270.42(a) specifies in detail the approval procedures agreed upon by the Committee for Class 1 modifications. Under these procedures, the permittee could, at any time, put into effect a Class 1 modification (except those

requiring prior Agency approval) However, the permittee would be required to notify the Agency by certified mail or by any other means that establish proof of delivery within seven calendar days of making the change. The notice would have to specify the change being made to the permit conditions or documents referenced in the permit and explain briefly why it was necessary.

In addition, the Committee agreed that within 14 days of putting the change into effect, the permittee would be required to notify by mail all persons on the facility mailing list concerning the change. EPA or an authorized State is currently required under 40 CFR 124.10(c)(1)(viii) to compile and maintain such a list for each RCRA permitted facility. The list must include all persons who have asked in writing to be on the list (for example, in response to public solicitations from the Agency). Also, it generally would include both local residents in the vicinity of the facility and statewide organizations that have expressed interest in receiving such information on permit modifications.

Because the facility mailing list is maintained by the Agency or the authorized State, rather than the facility, EPA recognizes that facilities may not in all cases have the most recent facility mailing lists. The Committee did not specifically address this issue. EPA, however, believes that the facility has the responsibility initially to obtain from EPA or the authorized State a complete facility mailing list and to update it by contacting the Agency periodically. However, EPA believes it should be the Agency's responsibility to inform the facility of new additions to the list, and the facility should not be held responsible for failure to notify persons recently added to the EPA list when it has made a reasonable effort to keep its list current.

Under the current requirements of 40 CFR 124.10(c)(1)(ix) (A) and (B), notice of permit applications and major permit modification requests must also be sent to units of local and State governments having jurisdiction over the facility. The Committee did not address the question of whether notices of Class 1, 2, or 3 permit modifications should be sent to these authorities as well as to persons on the public mailing list. However, the Agency recognizes that it may be appropriate to require notification of local and state authorities and solicits comment on this issue.

Although the permittee may make most Class 1 modifications without EPA approval or prior public notice, proposed § 270.42(a)(iii) provides that the public may ask EPA to review any Class 1 modification, and that the Agency may for cause reject a Class 1 modification—either in response to public comments or at its own discretion. The Committee did not specify procedures for denying Class 1 modifications. To clarify this authority, EPA is proposing that, if the Agency denies a Class 1 modification request, it would be required to notify the permittee in writing of this ruling, and the permittee would be required to comply with the original permit conditions. The Committee recognized that it would be extremely unlikely that the Agency would ever have to exercise this authority given the trivial nature of Class 1 modifications; however, the Committee believed that EPA should have the final authority to accept or reject a modification, and it therefore explicitly incorporated this authority into its agreement.

As discussed above, the Committee agreed that certain Class 1 modifications—such as changes in interim dates in schedules of compliance or minor changes in incinerator trial burns—should be allowed only after Agency approval. This provision has been adopted in proposed § 270.42(a)(2), which requires the permittee to secure written Agency approval before putting into effect Class 1 modifications identified in Appendix I with an asterisk. In this case, the approval procedure would be analogous to the current minor modification procedures, except that the permittee would still be required to notify persons on the facility mailing list of the change within 14 days of putting it into effect. (EPA believes that the permittee's request for approval of the modification would satisfy the requirement under proposed § 270.42(a)(1) of notifying EPA within 7 days of putting a Class 1 modification into effect; therefore, the permittee would not be required to notify EPA a second time after the change was effected.)

2. Class 2 Modifications.

Class 2 modifications cover changes that are necessary to enable a permittee to respond, in a timely manner, to (i) common variations in the types and quantities of the wastes managed by the facility, (ii) technological advancements, and (iii) many of the expected regulatory changes, including new land disposal restrictions and listings or identifications of new hazardous wastes,[1] where such changes can be implemented without substantially changing the design specifications or management practices prescribed by the permit. Generally, these changes cover increases of 25 percent or less in a facility's non-land-based treatment or storage capacity, authorizations to treat or store new wastes that do not require different unit design or management practices, and modifications to improve the design of hazardous waste management units or improve management practices. The specific modifications that fall in Class 2 are identified in Appendix I to 40 CFR Part 270. This Appendix is discussed more fully in section IV.C of this preamble.

In the Committee's formulation, Class 2 modifications do not substantially alter the conditions of the permit or reduce protection of human health or the environment. In general, they address common and frequently occurring changes needed to maintain the facility's capability to manage wastes. The Committee, therefore, agreed that these modifications require timely review, justifying different processing and public participation procedures from those currently required for major permit modifications. EPA is proposing the procedures agreed upon by the Committee in § 270.42(b) of this rule.

Under proposed § 270.42(b)(1), a permittee wishing to make a Class 2 modification would be required to submit to EPA a modification request describing the exact change to be made to the permit conditions and supporting documents, identifying the modification as a Class 2 modification,[2] explaining why the modification is needed, and providing the applicable information required by 40 CFR 270.13 through 270.21 and 270.62. The Committee also recommended that permittees discuss proposed modifications with the Agency and the community before submitting the modification request. EPA strongly seconds this recommendation; the Class 2 process will only be effective and provide substantial benefit to the regulated community if modification requests are clear and complete. Early contact with the Agency should eliminate unnecessary delays and denials of the modification requests.

Based on the Committee's agreement, § 270.42(b) also requires the permittee to notify persons on the Agency's facility mailing list about the modification request and to publish a notice of the request in a local newspaper. (The

[1] The Committee agreed that changes necessary to manage newly listed or identified wastes required special procedures. The procedures are proposed in § 270.42(g) of this rule, and described in section IV.B.7 of this preamble.

[2] The Agency has added this requirement. The Committee did not explicitly identify it.

facility mailing list is defined in proposed § 270.2 and is discussed in section IV.B.1 of this preamble.) Under the Committee agreement, the notice would have to be mailed to persons on the facility list and published on the date of submission of the request to the Agency. Although the Agency is proposing this requirement as agreed upon by the Committee, EPA requests comment on whether the permittee should be provided more flexibility in the timing of the notice mailing and publication. The Agency believes it may at times be logistically difficult for the facility to ensure that the submission to EPA, the facility list mailing, and the newspaper publication all occur on the same day. As one alternative, the rule might require that the notice be mailed to persons on the facility list no later than the date of submission of the request to the Agency, and no earlier than seven days before that date. A second alternative would be to require the permittee to submit his request to the Agency no fewer than 7 days and not more than 21 days before mailing and publishing the notice.

Proposed § 270.42(b)(2) specifies the information that would be required in the notice: (i) Announcement of a 60-day comment period, during which interested persons may submit written comments to the Agency; (ii) the announcement of the date, time, and place for a public meeting; (iii) the name and telephone number of the permittee's contact person, whom the public can contact for information on the request; (iv) the name and telephone number of an Agency contact person whom the public could contact for information about the permit, the modification request, applicable regulatory requirements, permit modification procedures, and the permittee's compliance history; (v) information on where the public can view copies of the modification request and any supporting documents; and (vi) a statement that the permittee's compliance history during the life of the permit is available from the Agency's contact person. As the Committee agreed, proposed § 270.42(b)(2) would require the permittee to submit to the Agency evidence that this notice was published in a local newspaper and mailed to persons on the facility mailing list. Finally, the permittee would be required to place a copy of the permit modification request and supporting documents in a location accessible to the public in the vicinity of the permitted facility. This location might be, for example, a public library, a local government agency, or a location under the control of the owner.

EPA believes that several issues raised by the information requirements in this notice deserve further explanation. First, as proposed in § 270.42(b)(4), the 60-day comment period would begin on the date the modification request was mailed to EPA; the notice mailed to the public and published in a local newspaper should indicate the final date of the comment period. Second, EPA or the authorized State Agency would have the responsibility of providing the permittee with the name, address, and telephone number of the Agency contact person, who would be specified in the notice. Finally, the "permittee's compliance history," referred to in proposed § 270.42(b)(2)(vi), might constitute a summary list of violations during the life of the permit or other reasonable summary statements. It would not include confidential inspection reports or other items not in the public record. The Agency would maintain this summary and make it available to the public on request.

The Committee also agreed that the permittee should be required to hold an informational meeting, open to all interested members of the public, no fewer than 15 days after publishing the notice and no fewer than 15 days before the end of the comment period. The purpose of the meeting would be to enable the permittee and the public to exchange views and, to the extent possible, resolve any issues raised by the modification request. (Where issues were not resolved at the meeting, interested parties might meet in smaller subsequent meetings to resolve them.) The meeting would have no official status—that is, an official transcript of record of the statements made at the meeting would not be required and the Agency would not be obligated to attend the meeting or to consider comments made at the meeting. However, the Committee expects that the meeting would lead to more informed written comments to the Agency and, to the extent that issues were resolved, written comments from the permittee revising the modification request.

The Committee agreed on specific procedures for Agency review and approval or denial of Class 2 modification requests, which are proposed at § 270.42(b)(6). Under proposed § 270.42(b)(6)(i), the Agency must make one of the following four decisions within 90 days of receiving the modification request (i) Approve the request with or without changes; (ii) deny the request; (iii) notify the permittee that it will make a decision on the request within 30 days; or (iv) approve the request, with or without changes, as a temporary authorization having a term of up to 180 days. If EPA notifies the permittee of a 30-day extension for a decision, it must, by the 120th day after receiving the modification request, make one of the following decisions: (i) Approve the request, with or without changes; (ii) deny the request; or (iii) approve the request as a temporary authorization for up to 180 days.

It should be noted that the Committee agreement specified that the Agency would have to make its decision within 90 (or 120) days of *submission* of the Class 2 modification request. EPA believes that this date may at times be difficult to ascertain, and therefore has modified the requirement so that it applies 90 (or 120) days after receipt of the modification request. The Agency solicits comments on this change.

If the Agency fails to make one of the three decisions listed above by the 120th day, the activities described in the modification request, as submitted, are authorized for a period of 180 days as an automatic temporary authorization without Agency action. At any time during the term of the automatic temporary authorization, however, the Agency may approve or deny the permit modification request. If the Agency does so, this action will terminate the temporary authorization. If the Agency has not acted on the modification request within 250 days of receipt of the modification request, the permittee must under proposed § 270.42(b)(6)(iv) notify persons on the facility mailing list, and make a reasonable effort to notify other persons who submitted written comments, that the temporary authorization will become permanent unless EPA acts to approve or deny it. If the Agency fails to approve or deny the modification request during the term of the automatic temporary authorization, the activities described in the modification request become authorized without Agency action on the day after the end of the term of the automatic temporary authorization. This authorization would last for the life of the permit unless modified later by the permittee (under § 270.42) or the Agency (under § 270.41).

During the term of any automatic authorization, whether it was a temporary authorization occurring at day 120 or a final authorization at day 300, the newly authorized activities would be limited to those described in the modification request. Furthermore, the permittee would be required to

comply with all applicable Part 265 standards and, to the extent practicable, with the standards of Part 264. These standards would be enforceable by EPA or an authorized State, and any deviation from them—even if the deviation was explicitly described in the modification request—would constitute a violation of Part 264 or Part 265.

As proposed today, an automatic temporary authorization can only occur in the absence of an Agency decision by the 120th day after a Class 2 modification request (or by an alternative date established by § 270.42(b)(6)(vii) or § 270.42(e)(4)(ii), discussed later in this preamble). In contrast, if the Agency takes action on the modification request by *issuing* a temporary authorization by the prescribed deadline, then an automatic authorization cannot subsequently occur on the modification request. In this case, if the Agency has not approved the modification by the date that the temporary authorization expires, then the facility's activities under the authorization would have to cease. The facility would then have to await Agency action or resubmit the permit modification request. Although this approach is consistent with the Committee Agreement, the Committee did not specifically address the operation of automatic authorizations after Agency-issued temporary authorizations. An alternative to today's proposed approach would be to make the automatic authorization provision also apply to these Agency-issued temporary authorizations, including the notification on the 250th day as described above. This alternative would assure the permittee that a final action on his or her modification request would occur on a certain schedule. The Agency solicits comments on these and other alternatives in the Class 2 modification process.

It should be noted that the Committee agreement specified that during the term of an automatic authorization, facilities should be required to comply with Part 264 standards. However, the Agency is concerned that in some cases the Part 264 standards are not self-implementing—they require the permit writer to determine the appropriate permit condition based on the requirements of Part 264 and the operation at the specific facility. The non-self-implementing nature of some of these standards, may cause enforcement problems for the Agency and may not provide practical performance standards for a facility. For these reasons, EPA has modified the Committee Agreement on this point to require compliance with Part 265—which is designed to be self-implementing—at a minimum, and with Part 264 where the standards are clearly established for the activity subject to the automatic authorization. The Agency solicits comments on this proposed approach.

The automatic authorization of Class 2 modifications if EPA or a State failed to approve or deny a modification request expeditiously proved to be a controversial element of the negotiated agreement. One Committee member declined to sign the final agreement because of this provision (which became known as the "default provision"). She stated concerns in a letter to EPA, which is included in the record for this rulemaking. The rest of the Committee members, however, accepted the default provision as necessary to ensure that the regulated community received some assurance that Class 2 modifications—which are relatively straightforward in nature—can be made on a predetermined schedule.

EPA believes that the default provision is an important feature of the negotiated agreement, and disagrees with the concerns expressed by the dissenting Committee member. Class 2 modifications represent a restricted category of changes, such as increases in tank or storage capacity up to 25 percent, addition of new wastes that do not require new management practices, and changes in vegetative requirements for closure. They are the kinds of changes that can be readily reviewed, because they do not represent major deviations from the facility's permitted activities, and the risks they might entail are limited. In fact, these modifications will frequently improve operations at the facility, leading to more efficient handling and treatment of the nation's hazardous waste. Requests for these kinds of changes can and should be acted upon promptly by the Agency. Where the modification fails to comply with Part 264 standards, or where information in the request is insufficient to determine compliance, EPA will deny the request. However, where the request is justified, it should be granted expeditiously. The "default provision" will both ensure prompt Agency attention and assure the facility owners that the review of their requests will not drag on indefinitely.

EPA believes that the "default provision" will only rarely be exercised. However, it should be emphasized that, even in the case of a decision by default, the proposal provides ample protection to human health and the environment. In the first place, as described above, the kinds of activities that could take place under an automatic authorization are limited. In the second place, Part 265 standards, and to the extent practicable Part 264 standards, would apply to all activities conducted under an automatic authorization, ensuring that the changes must comply with enforceable standards. Therefore, EPA disagrees with the comment that this approach would be unenforceable or would not provide reasonable protection to human health and the environment.

For these reasons, EPA supports the "default provision" in today's proposal. The concept of automatic approvals has worked well in other programs, such as EPA's review program for new chemicals under the Toxic Substances Control Act, and it is equally applicable here. Particularly because it is balanced by significantly strengthened procedures for public participation, EPA believes that the "default provision" for limited classes of modifications would contribute to a more effective and streamlined permitting program.

One final issue related to Class 2 modifications deserves discussion. The Committee agreed that the facility owner/operator should be allowed to perform any construction necessary to implement a Class 2 change before the modification request is granted. The permit modification regulations currently prohibit "preconstruction" for permit modifications, just as the statute prohibits preconstruction of hazardous Waste management facilities before a permit is issued. The Committee agreed that, because of the limited nature of Class 2 modifications and the need for flexibility in maintaining permits, preconstruction should be allowed for this category of modification. The Agency believes that it has the authority under RCRA to allow "preconstruction" of these Class 2 changes. The facility owner/operator, however, would assume the risk that EPA might deny the permit modification request, and the construction already undertaken would become unusable, at least for managing hazardous waste. The preconstruction provision for Class 2 modifications is proposed under § 270.42(b)(8).

3. Class 3 Modifications

Class 3 modifications cover changes that substantially alter the facility or its operations. Generally, they include any increases in the facility's land-based treatment, storage, or disposal capacity; increases of more than 25 percent in the facility's non-land-based treatment or storage capacity; authorization to treat, store, or dispose of wastes not listed in the permit that require changes in unit design or management practices;

substantial changes to landfill, surface impoundment, and waste pile liner and leachate collection/detection systems; and substantial changes to the ground-water monitoring systems or incinerator operating conditions. The specific modifications that fall into Class 3 are identified in Appendix I to 40 CFR Part 270 and discussed more fully in section IV.C of this preamble.

The Committee agreed that, because Class 3 modifications involve substantial changes to facility operating conditions or waste management practices, they should be subjected to the same review and public participation procedures as permit applications. In addition, the Committee agreed that the public should have the opportunity to meet with the facility owner/operator and comment on the modification request before the Agency developed a draft permit. The specific procedures agreed upon by the Committee for Class 3 modifications have been proposed at 40 CFR 270.42(c).

The first steps in the application procedures for Class 3 modifications are similar to the procedures for Class 2. Under proposed § 270.42(c)(1), the permittee must submit a modification request to EPA indicating the exact change to be made to the permit; identifying the change as a Class 3 modification; explaining why the modification is needed; and providing applicable information required by 40 CFR 270.13 through 270.21 and 270.62. As with Class 2 modifications, the permittee is encouraged to consult with EPA before submitting the modification request.

As agreed upon by the Committee, the permittee would also be subject to essentially the same public notice and meeting requirements for Class 3 as for Class 2 modifications. Proposed § 270.42(c)(2) would require the permittee to notify persons on the facility mailing list concerning the modification request. This notice would have to occur on the date of submission of the request to the Agency, and would have to contain the same information as the Class 2 notification, except that it would include an announcement that a second public meeting might be held if a written request were made. Proposed § 270.42(c)(4)(i) would require the permittee to hold an informational public meeting, just as in Class 2. However, proposed § 270.42(c)(4)(ii) adds a provision that the permittee may hold a second meeting at his or her own discretion, or if requested in writing by a member of the public.

The Committee agreed that if the permittee chose to conduct a second public meeting, he or she would be required to notify the public in accordance with proposed § 270.42(c)(4)(ii)(A)-(E). The purpose of the meeting would be to allow the permittee and the public to further discuss issues raised in the first meeting and, if possible, to resolve them. In many cases, the Committee believed, this second meeting might lead to a revision to the permittee's modification request. The meeting would have to be held no fewer than 15 days after the notice and no fewer than 15 days before the end of the comment period. If it were not possible to hold the meeting at least 15 days before the end of the comment period, the permittee would be required to extend the comment period. The Committee also agreed that, to facilitate the resolution of issues, the permittee might employ a neutral facilitator to chair the meeting. In this case, the permittee and the Agency would have to agree on the selection of the facilitator. Like the first meeting, the second meeting would not have any official status.

Finally, the Committee agreed that the Agency would use the permit issuance procedures of 40 CFR Part 124 for Class 3 modifications after the conclusion of the 60-day (or extended) comment period. Thus, the Agency would have to prepare a draft permit modification, publish a notice, allow an additional 45-day public comment period on the draft permit modification, hold a public hearing on the modification if requested, and issue or deny the permit modification. In addition, the Agency would be required to consider all written comments received by the Agency during the public comment period announced by the permittee at the time of the modification request.

4. *Temporary Authorizations* The Committee also agreed that EPA should have the authority to grant a permittee temporary authorization, without prior public notice and comment, to conduct activities necessary to respond promptly to changing conditions. In granting a temporary authorization, under the Committee agreement, the Agency would have to find that the modification was necessary to: (i) Facilitate timely implementation of closure or corrective action activities; (ii) facilitate timely management of a newly regulated waste at the permittee's facility; (iii) avoid disrupting ongoing waste management activities at the permittee's facility; (iv) enable the permittee to respond to sudden changes in the types or quantities of wastes being managed at the facility or (v) carry out other changes to protect human health and the environment. Temporary authorizations could be granted for any Class 2 modifications that met these criteria, or for a Class 3 modification that met the criteria and that was necessary to: (i) Implement corrective action or facility closure activities, (ii) manage a newly regulated waste, or (iii) provide improved management or treatment of a waste already listed in the permit.

EPA has proposed these criteria for temporary authorization in § 270.42(e). However, the Agency believes that it may be appropriate to drop item (ii), the management of newly regulated waste, from the list. Elsewhere in the negotiated agreement, the Committee agreed on a special modification procedure for facilities handling newly listed or identified wastes. This procedure would allow the owner/operator to handle the newly regulated waste as a Class 1 modification, pending the review of a Class 2 or 3 modification request. The Agency has proposed this procedure in § 270.42(g) (see section IV.B.7 of this preamble). The Agency, therefore, is proposing a dual approach: A facility owner/operator would have the option of seeking a modification to handle a newly listed waste either as a temporary authorization or under the special procedures of § 270.42(g). Although the Committee agreed on including both approaches during its negotiations, EPA believes that the special procedures of § 270.42(g) are generally more appropriate for newly listed wastes. (This point is explained more fully in section IV.C.7 of the preamble.) Therefore, the Agency specifically solicits comments on whether it should retain changes necessary to handle newly listed wastes as a criterion for temporary authorizations.

In addition, EPA believes that other criteria not addressed by the Committee may be appropriate justifications for temporary authorizations. For example, EPA solicits comment on whether temporary authorizations should explicitly be allowed for storage or treatment of hazardous wastes subject to land disposal restrictions under 40 CFR Part 268. These restrictions are likely to lead to severe short-term dislocation of waste management systems and a shortfall in capacity. The regulated industry will require flexibility to handle and treat restricted wastes under these circumstances. For these reasons, the Agency recently promulgated a regulation classifying changes to facility permits for storage or treatment of restricted wastes as minor permit modifications, pending review of the changes as major modifications. (*See* § 270.42(p), as amended on July 8, 1987, 52 FR 25760.) If today's proposal

becomes final, the minor modification provision will be eliminated. EPA believes that it may be appropriate to retain the flexibility provided by this rule by allowing non-land-based management of restricted wastes (at least for Class 2 modifications) under temporary authorizations. The Agency solicits comments on this question.

Proposed § 270.42(e) (2)–(4) details the procedures agreed upon by the Committee for granting temporary authorizations. Under these procedures, the permittee must submit to the Agency a request for a temporary authorization describing the activities to be conducted; explaining why the temporary authorization was necessary; and providing sufficient information to ensure compliance with Part 264 standards. In addition, the permittee would be required to notify all persons on the facility mailing list about the temporary authorization request within seven days of the request. For temporary authorizations, however, the Committee agreed that there would be no automatic requirement for public comment or hearings. Instead, only temporary authorizations that were "not of short duration (i.e., permanent) would need to go through either the Class 2 or Class 3 approval procedures." (This issue is discussed later in this section of the preamble.)

Proposed § 270.42(e)(3) would require the Agency to approve the temporary authorization as quickly as practical. In granting the authorization, EPA (or the authorized State) would be required to find that the modification met the criteria for a temporary authorization. The Committee agreed that denial of a temporary authorization request would not prejudice action on the modification request. The denial would not necessarily mean that the activities contemplated by the permittee did not meet appropriate permitting standards; it might only mean that the criteria for a temporary authorization were not met.

Proposed § 270.42(e)(i) specifies that a temporary authorization must be issued for a term of no fewer than 90 and no more than 180 days, and that the authorization could be extended for another 180 days. Although the Committee Agreement specified this requirement, at least one member of the Committee raised the question of whether temporary authorizations should be allowed for a term of fewer than 90 days. EPA emphasizes that the term of the temporary authorization would begin at the time of its approval by the Agency, or at some specified effective date shortly after the time of approval. There would be no requirement, of course, that the authorized activities run at least 90 days, only that they be completed by the end of the authorization. Therefore, the Agency believes that there is no need specifically to allow temporary authorizations to be granted for fewer than 90 days. However, the Agency solicits comments on this issue; specifically, should the Agency have the ability to issue a temporary authorization with a duration of less than 90 days?

As the Committee agreed, the permittee would be required under proposed § 270.42(e)(4) to submit a complete modification request within 60 days of submitting the temporary authorization request. The initial request for a temporary authorization, of course, would have to be substantially complete, and, as required in proposed § 270.42(e)(2), would have to include sufficient information for EPA to determine that the activities would be in compliance with Part 264 standards. However, because of the need for timely action, the facility owner might not have time to provide all material required under Part 270—for example, changes that would be required in supporting documents such as personnel training plans or closure plans. This information would have to be provided as part of a complete modification request within 60 days. As required under proposed § 270.42(e)(4), if EPA did not determine the request to be complete after 60 days, the temporary authorization would be terminated.

The Committee agreed that, if the Agency issued a temporary authorization, it would be required to review the subsequent modification request in the same manner that it would in the absence of a request for a temporary authorization. However, in the case of a Class 2 modification, the Agency would not be required to act on the request until the date the temporary authorization (or the extended temporary authorization) expired. At that time, the Agency would be required to make one of the decisions otherwise required on day 120 for Class 2 modifications. If the Agency failed to make one of those decisions, the activities described in the modification would be temporarily authorized without action by the Agency.

It should be noted that this scenario could allow a significant amount of time to pass before the Agency is required to make a final decision on the permit modification request. For example, at the end of the extended temporary authorization, the Agency may grant another temporary authorization, or an automatic 180-day temporary authorization may occur in the absence of a decision. In either case, the final Agency action on the request could be delayed for this additional period of time. EPA believes that it is in the interest of the permittee, the public, and the permitting agency to render timely final decisions on these Class 2 permit modification requests. The Agency invites comment on the decision timeframes that would be established by this approach. Specifically, should the Agency be required to make its decision by the end of the initial temporary authorization, or should there be a fixed time period (e.g., 180 days) for the Agency to make its decision?

As stated earlier, the Committee agreed that Class 2 and 3 public participation procedures would be required only for "permanent" activities conducted under a temporary authorization. The Committee did not provide EPA specific guidance on how to interpret this directive. The Agency, however, believes that any activity that continues beyond 180 days (the maximum term of an initial temporary authorization) should be considered "permanent" and should require the full public participation requirements of Class 2 or 3 modifications, as appropriate. This approach is proposed in § 270.42(e)(3)(iii).

Under this proposal a permittee could operate under a temporary authorization for up to 180 days without providing a formal opportunity for public comment and without holding the informational meeting required for Class 2 and 3 modifications. These steps would be required before the activities continued beyond the 180-day term of the authorization. It should be emphasized, however, that even short-term activities could not be conducted under this authority without public knowledge. As explained above, in the case of all temporary authorization requests, the permittee would be required to notify the public within seven days of the request. Therefore, the public would have an opportunity to raise any issues or concerns it had with the permittee or the Agency, and it could appeal any Agency decision to grant a temporary authorization.

In summary, temporary authorizations may occur in the following situations

1. The permittee requests and the Agency approves a temporary authorization for short-term activities. This temporary authorization is renewable only if the permittee has complied with the notification procedures of the appropriate Class 2 or 3 modification process.

2. The permittee requests and the Agency approves a temporary authorization while the Agency and the public are reviewing the Class 2 or 3 modification. This temporary authorization is renewable once, for up to 180 days.

3. The Agency approves a temporary authorization after public review of a Class 2 modification request but before the Agency issues the final permit modification. This temporary authorization is not renewable.

4. An automatic temporary authorization is granted where the Agency fails to make a decision on a Class 2 modification request within prescribed deadlines.

EPA believes this approach provides a reasonable balance between the public's right to know of and comment on activities at permitted hazardous waste facilities and the facility owner/operators' need to implement certain changes rapidly. The Agency also believes that this approach allows a reasonable implementation of the Committee's agreement that full public participation was not necessary for short-term activities conducted under temporary authorizations at hazardous waste facilities.

More generally, the Agency believes that the temporary authorization procedure approved by the Negotiating Committee will provide important flexibility to permitted hazardous waste facilities, without sacrifice to public health or the environment. In fact, because temporary authorizations are designed specifically for activities necessary to improve management of hazardous waste, or to conduct timely closures and corrective actions, this authority should reduce actual risk and promote safe handling of wastes. For this reason, the Agency believes that the temporary authorization procedure will greatly benefit the regulated industry, regulating agencies, and the public.

5. Other Modifications

As explained later in this preamble, the Agency has chosen to codify the list of permit modifications developed by the Negotiating Committee. This approach leaves open the question of how to handle modifications that have not been listed in one of the three categories.

While the Committee did not specifically address this question, the Agency is proposing an approach in § 270.42(f). Under this proposal, a facility owner/operator wishing to make a permit modification not included on Appendix I could submit a Class 3 modification request, or alternatively ask the Agency for a determination that Class 1 or 2 modification procedures should apply. In making the determination, the Agency would consider the similarity of the modification to modifications listed in Appendix I, and would apply the general definitions of Class 1, 2, and 3 modifications developed by the Negotiating Committee. Furthermore, the Agency would notify persons on the facility mailing list of its decision to classify the modification as Class 1, 2, or 3, and the public and the permittee would have the right to appeal the classification, as well as EPA's decision to grant or deny the request itself. Finally, EPA intends to monitor decisions by permitting authorities (both the EPA Regional offices and authorized states) on modification request classifications and will periodically amend Appendix I of this regulation to include these classifications.

As an alternative, the Agency considered requiring the Class 3 process for any modification that did not appear in Appendix I, and periodically amending the regulations to add new modifications. EPA, however, has rejected this approach as unwieldy and as significantly undermining the flexibility provided by this proposal. The Negotiating Committee and the Agency have made a concerted effort to develop a comprehensive list of permit modifications in Appendix I. However, experience has shown that a complete list is not possible, and that there will inevitably be many requests for modifications not found in the Appendix. Thus, unless a simple and flexible process is developed for addressing unclassified modifications, today's proposal will provide only limited relief. The Agency believes that proposed § 270.42(f) provides such an approach.

6. Permit Modification Appeals

The Committee agreed that members of the public and the permittee should have the same rights to appeal Agency decisions on permit modifications as they have to appeal permits. The proposal would require EPA to notify the public of its decisions on permit modification requests, including the automatic authorization of permit modifications through the default provision. It would also explicitly allow the public to appeal these decisions under the procedures of 40 CFR Part 124. These requirements are proposed in § 270.42(d).

7. Newly Listed or Identified Wastes

Under current regulations, facility owner/operators must secure a major permit modification before handling hazardous wastes not listed in the facility permits. This requirement applies not only to hazardous wastes new to a facility, but also to wastes that a facility is already handling that are newly listed or identified by EPA as hazardous. Thus, if a permitted facility is handling a solid waste that EPA lists as hazardous under section 3001(b) of RCRA or that possesses characteristics that EPA identifies as hazardous under sections 3001 (g) and (h), the facility's permit must undergo a major modification to allow it to continue to handle the waste. This modification might simply entail adding the new waste to the permit, because the facility had been handling the waste in an already permitted unit. Alternatively, it might entail adding to the permit storage or treatment tanks, surface impoundments or landfills, incinerators, or other units, because the waste had been handled in an unpermitted unit.

The Committee agreed that permit modifications necessary to handle newly listed or identified wastes present a special case and do not fit readily into the established procedure. In particular, the Committee recognized the severe disruption that a lengthy permit modification process might cause a facility already handling a newly regulated waste—especially if the facility had to go through a Class 3 modification to continue to handle the waste. The Committee also acknowledged a potential inequity between permitted and interim status or unpermitted facilities handling newly regulated wastes. Under RCRA, previously unregulated facilities can gain interim status, allowing them to continue to handle the waste, simply by submitting a Part A application and complying with 3010 notification requirements. Interim status facilities would be able to continue to handle newly listed or identified wastes through a change in interim status without a detailed permitting review by the Agency. Permitted facilities, however, would require a major permit modification. As a result, permitted facilities would be penalized when it came to handling newly listed or identified wastes.

For this reason, the Committee agreed that special procedures should be developed for modifications involving newly listed or identified wastes, and it provided general guidance to EPA on developing an approach to this class of modifications

- The permittee would submit a Class 1 modification request at the time the waste became subject to the new requirements.

• The permittee would comply, to the extent practicable, with Part 264 requirements, and where this was not practicable with Part 265 requirements.

• In the case of Class 2 and 3 modifications, the permittee would submit the appropriate modification request within a specified time period.

The Committee also agreed that, where new wastes or units are added to a facility's permit under this approach, they would not count against the 25 percent expansion limit for Class 2 modifications.

EPA is today proposing this approach in § 270.42(g). EPA's proposal would allow permitted facilities to continue to handle newly listed or identified wastes—either in permitted or unpermitted units—if they were handling them at the time of publication of the final rule listing or identifying the new waste. Furthermore, as the Committee agreed, the permittee would be required to submit a Class 1 modification at the time the waste became subject to the new listing or identification (that is, on the effective date of the rule); the permittee would have to comply with Part 265 standards and to the extent practicable with Part 264; and for Class 2 or 3 modifications he or she would have to submit a complete permit modification request within 180 days of the effective date.

The Agency considered limiting these special modification procedures to facilities that were handling wastes on the effective date of the final rule (which under RCRA would be six months after publication), rather than the date of publication. EPA has tentatively rejected this approach, because it would provide an opportunity for permitted facilities to introduce new wastes after the exact scope of the listing was known but before the rule became effective. In this way, facilities could circumvent full permit modification procedures. However, EPA acknowledges that its proposed approach does raise equity questions, because interim status and unpermitted facilities under current regulations and statutory requirements would be free to expand capacity up until the effective date of a listing or identification rule.

The Negotiating Committee did not provide specific guidance to EPA on the amount of time that the permittee should be given to submit a complete application. However, the Agency believes a period of 180 days is appropriate because it is consistent with the call-in period for Part B permit applications for interim status facilities. EPA believes that less time may be inadequate in many cases, particularly where a new unit, such as an incinerator or a surface impoundment, is involved. In the case of a surface impoundment, for example, the permittee might in some cases be required to install monitoring wells and take other steps to provide a complete application. For this reason, EPA believes that 180 days is an appropriate period.

As discussed earlier, EPA recently proposed a rule that would allow the handling of newly listed or identified wastes as a minor modification, pending action on a major modification (52 FR 30570, August 14, 1987). The Agency intends to promulgate that rule, regardless of today's proposal, to provide earlier relief to the regulated industry. However, when today's proposal is issued as final, it will supersede that rule.

One major difference between the August 14 proposal and today's proposal should be noted. The August 14 proposal would allow facilities to handle newly regulated wastes through minor permit modification procedures, which require prior EPA approval, while today's proposal would not require prior EPA approval. The permittee would simply have to notify EPA and the public under the Class 1 procedures to put into effect a modification involving a newly listed or regulated waste. The August 14 proposal did not contemplate an approach like the one presented in today's proposal since the intent of the earlier proposal was to adhere to the framework of the current minor modification regulations, which does not provide for modifications without prior Agency approval. EPA believes that the approach in today's proposal is more equitable, because unpermitted facilities and, for the most part, interim status facilities would not require prior Agency approval before continuing to handle a newly listed or identified waste. Furthermore, today's approach is consistent with the Negotiated Committee's agreement.

8. Publication of Permit Modification List

The Committee also agreed that EPA or an authorized State would maintain a list of approved permit modifications and periodically publish a notice that the list is available for review. The Committee did not specify how often such a notice would have to be published; however, EPA believes that the notice should be published once a year. The Agency considered a shorter interval, but believes more frequent publication to be unnecessary and unwieldy. The public notice will only serve as a reminder to the public—or as a notice to new residents—that an updated list is available for review. The Agency believes that annual publication of this notice would provide the public adequate opportunity for oversight of how the Agency was running the permit modification program. Members of the public interested in a closer review could follow the Agency's actions on a site-specific basis.

C. Classification of Permit Modifications

The Committee decided that it was important to identify in the regulation what types of facility changes constitute Class 1, 2, and 3 modifications. Therefore, the Committee developed an extensive classification of possible changes that would necessitate permit modifications. This classification is presented in Appendix I of Part 270.

The Appendix I classification list generally follows the organization of the facility standards in Part 264. The list is designed to be self-explanatory, and, with a few exceptions noted in the preamble discussion below, represents Committee agreement. Therefore, the following preamble discussion will only address items where some background may be useful, suggestions that did not receive Committee consensus, or substantive additions that EPA is proposing.

In adopting the Committee's permit modification classification list for inclusion in Part 270, the Agency needed to make some minor changes to the list. However, the Agency believes that these changes are only minor structural reorganizations or, in some cases, minor editorial changes to make the wording more precise. EPA has also added a few substantive items to the list that the Committee did not address or resolve. All of EPA's substantive additions are identified and discussed in the preamble.

The Agency specifically requests comments on the proposed classification of Class 1, 2, and 3 modifications. Commenters should address the questions of whether the specific modifications listed in Appendix I are clearly described, whether specific modifications are appropriately classified, and whether other modifications should be listed.

1. General Permit Provisions

The items identified under "General Permit Provisions" in Appendix I are primarily derived from the conditions that are applicable to all permits as specified in §§ 270.30–270.33. Other general changes are also included in this section that are administrative in nature, or that recur throughout the Part 264

regulations but would more simply be addressed in one place (e.g., frequency of reporting).

The Committee agreed that administrative and informational changes and correction of typographical errors are of little concern, and are primarily necessary to maintain a current permit document. One Committee member suggested that correction of minor factual errors should also be included as a Class 1 change, but the Committee did not have time to address this suggestion. The Agency requests public comment on whether correction of minor factual errors should be added to this list as a Class 1 change, and if so, how "minor factual errors" should be defined.

The Committee also agreed that it is important that the permittee be able to make routine equipment replacements that are necessary for the continued operation of the facility. Equipment that frequently needs replacement includes pumps, pipes, valves, incinerator fire-brick, instrument readout devices. In most cases, such replacements should not even require a permit modification since the permit should acknowledge them as ongoing maintenance activities. However, some Committee members offered examples where permits specified a particular piece of equipment, including the manufacturer's name and the model number of the item. Such an item may not be available at a later date when it needs replacement. (Some permit conditions may inadvertently create such restrictions by incorporating the Part B permit application by reference.) The Committee decided that when a permit modification for such a change is needed, it would be a Class 1 change. The Committee further agreed that the facility should be able to upgrade these kinds of ancillary equipment without prior approval to take advantage of better designs or more suitable products, so long as the new equipment is "functionally equivalent" to the equipment it replaces. (The definition of "functionally equivalent" is discussed later in the preamble.) These would also be Class 1 changes.

The proposal would also allow changes in interim compliance dates in schedules of compliance with Director approval. Where such changes would be likely to delay the final date of compliance, it would not qualify as a Class 1 change.

2. General Facility Standards

The "General Facility Standards" portion of Appendix I encompasses changes that affect the general standards and requirements that apply to all hazardous waste facilities (Subparts B–E of Part 264). These changes primarily involve the various plans that must be maintained by the facility (e.g., contingency plan, training plan) and are self-explanatory.

3. Ground-Water Protection

Subpart F of Part 264 specifies the RCRA system for protecting ground-water. Permitted facilities subject to ground-water monitoring requirements have very detailed permit conditions regarding the hazardous constituents to be monitored; concentration limits of hazardous constituents that trigger subsequent actions; and the number, location, depth, and design specifications of monitoring wells. The Committee agreed to a classification of typical changes, incorporated into Appendix I, that may be needed in the ground-water monitoring program at a facility.

The classification of changes in ground-water monitoring in Appendix I represents a compromise reached by the Committee. EPA wishes to emphasize, however, that it considers ground-water monitoring to be a critical element of permits for land-based units, and that ground-water monitoring systems require close attention by the Agency. Many of the specific changes categorized as Class 2 in this section might under some circumstances constitute significant changes in the ground-water monitoring system—such as change in point of compliance; change in the number, location, or depth of wells; and reduction in the number of hazardous constituents analyzed for the assessment program. Permittees should understand that, if a permit modification request did not provide documentation that the modification would fully comply with Part 264 standards and would not reduce the effectiveness of the ground-water monitoring system, EPA or an authorized State would be obliged to deny the permit modification request. (Alternatively, the Agency could extend the review period, with the approval of the permittee.) Therefore, EPA expects that the permittee will consult closely with the regulating agency before requesting such modifications, except in the most straightforward of cases.

EPA believes that Class 2 is an appropriate category for these types of changes regarding ground-water monitoring, because of the requirement that Class 2 modification requests indicate compliance with Part 264 requirements and because—once ground-water monitoring systems have been established and approved as part of the original permit—changes in the systems will generally be minor and technical. In fact, EPA believes that most changes will be made to "improve" permitted systems, because of new information, technology, or other considerations. Therefore, the Agency believes that public health and the environment will be best served by an expedited approval procedure for these kinds of changes.

The Agency, however, specifically solicits comments on the Committee's categorization of these permit modifications as Class 2. The Agency also solicits comments on whether certain modifications related to ground-water monitoring should be categorized as Class 1. For example, several of the modifications appear to be technical in nature, easily reversible, and generally of limited interest to the public—for example, changes in sampling or analysis procedures or changes in statistical procedures. The Agency solicits comments on whether such changes should be allowed as a Class 1 with prior Agency approval.

EPA has introduced several changes to the Committee's ground-water protection list. First, § 264.98(h)(4) requires the facility to request a permit modification within 90 days when it must establish a compliance monitoring program. The Committee agreed that this should be a Class 2 permit modification. However, the Committee did not address permit modifications similarly required by § 264.99(k) for changes to an established compliance monitoring program when the program no longer satisfies the specified requirements. The Agency is proposing also to classify these changes as Class 2 modifications. We believe that changes to a compliance monitoring program should be subject to the same level of Agency review and public participation required for the establishment of the compliance monitoring program. (*See* item C(9) in Appendix I.) The Agency requests comments on this addition to the Committee agreement.

Second, the Committee inadvertently failed to address the pre-HSWA corrective action activities at regulated units that are currently identified as major modifications. (HSWA corrective action is discussed in section IV.C.8 of the preamble.) Therefore, the Agency is proposing to add a new item C(10) to Appendix I to address the addition of a corrective action program when required by § 264.99(i)(2) or changes to such a program as required by § 264.100(h). Part 264 requires facilities to submit a permit modification request in both of these cases. The Agency believes that these particular corrective action activities are of major concern

since they are not called for unless there is evidence that the ground-water protection standard is being exceeded. Therefore, the Agency is proposing to categorize them as Class 3 permit modifications. This classification is consistent with earlier Committee deliberations on corrective action and ground-water monitoring. We invite comment on including this additional item in Appendix I.

4. New Wastes in a Unit

The use of the term "new wastes" in the Appendix I list refers to changes involving the introduction of hazardous wastes to units that are not permitted to handle these wastes. In other words, the facility may be seeking to accept wastes that were not previously identified in the permit, or it may already be managing the waste but would prefer to shift it to a different treatment, storage, or disposal process. Permit modifications for "newly regulated wastes"—those wastes that are newly listed or identified—are treated somewhat differently, as described in section IV.B.7 of this preamble.

The Committee agreed that permit modifications to allow new wastes at a permitted unit should be classified into two general categories. The first situation would involve new wastes that are sufficiently similar to wastes currently authorized at the unit so that no additional or different management practices, design, or process is required. As an example, a unit may be permitted only to treat specific solvent wastes, but may be equally capable of treating other solvent wastes that exhibit similar physical and chemical properties within the same management conditions of the permit. In these cases, the Committee specified that the permit modification should follow the Class 2 process.

The second situation would be where the introduction of a new waste at a unit would require different or additional management practices, design, or process in order to properly manage the waste—for instance, if the new waste was reactive or ignitable and the permit conditions did not anticipate that such wastes would be managed in the unit. The Committee agreed that these circumstances would require a Class 3 permit modification.

For each type of unit in Appendix I, the Committee defined general criteria as discussed above to determine whether permit modifications involving the management of new wastes represent a Class 2 or a Class 3 change. Although these criteria are general in nature, the Agency believes that they would be useful and appropriate in delineating between Class 2 and Class 3 modifications.

5. General Approach to Defining Unit-Specific Changes

This section of the preamble describes the Committee's classification of permit modifications involving the various types of hazardous waste management units at a facility. In general, the Committee addressed for each type of unit: (1) Changes to or addition of units that affect the facility's capacity, (2) changes to units that do not affect facility capacity, (3) replacement of units, (4) introduction of new wastes into a unit, and (5) changes to the waste management practices involving the unit. Also, the Committee identified additional changes that were appropriate for specific units.

i. *Tanks and containers.* The permitting standards for containers and tanks are found in Part 264 Subparts I and J. Because of the similarities of the classifications that the Committee developed for these units, they are discussed together. Furthermore, EPA made a structural change to the Committee's classification list in that it combined the "tank storage" and "tank treatment" sections into a single section that encompasses all of the activities identified by the Committee. The Agency believes that this arrangement is preferable because it eliminates possible confusion created by duplicative language and because the Part 264 standards do not differentiate between tanks used for treatment and tanks used for storage. This format change does not affect the substance of the Committee's classifications.

The Committee decided that tank system and container changes or additions resulting in a capacity increase of 25 percent or less should qualify as a Class 2 modification. This arrangement would allow modest capacity growth at a facility without the procedures currently associated with major modifications, but with an appropriate level of public notice and participation. Any change leading to an increase of more than 25 percent would require a Class 3 modification (except for certain specific unit operations described later in this section).

The 25 percent limit is based on the initial permitted capacity for tank systems or containers. As an example, a facility that has a permit for both tank systems and containers may bring on additional tank systems as Class 2 modifications until the cumulative increase in tank capacity equals 25 percent of the tank capacity specified in the permit. Similar changes may be made involving container units, based on the initial container capacity. Once the 25 percent limit is reached, all subsequent modifications involving capacity increase for the specific type of unit would follow the Class 3 process.

Another example that illustrates the limited nature of this Class 2 provision would be where a facility's permit specifies extensive container storage, but there is no provision for tank storage. In this case, the container storage operation may be expanded as a Class 2 change subject to the 25 percent limit, but addition of tanks would be a Class 3 modification since there was no permitted tank capacity.

The Committee also discussed the addition of certain tanks that perform particular treatment activities—neutralization, dewatering, phase separation, or component separation—that are fairly elementary physical processes. These unit operations are relatively simple in design and are well suited to use as mobile treatment units (MTUs). Furthermore, it was recognized that there is growing interest in the waste management field for using such MTUs since they provide industry significant flexibility in selecting among treatment technologies, in pretreating wastes before final treatment, and in reducing waste volume before shipping. (Note that EPA recently proposed amendments to the RCRA permitting program to remove regulatory impediments to using MTUs in treating hazardous wastes. 52 FR 20914, June 3, 1987.)

For these reasons, the Committee decided that the temporary (i.e., up to 90 days) addition of tanks to perform neutralization, dewatering, phase separation, or component separation operations may merit a separate classification from tanks intended for other uses. However, the Committee could not reach consensus on the appropriate modification class for these units. Initial discussions of the issue centered on treating these changes as Class 1 modifications, and some members of the Committee preferred this approach. Most Committee members believed that temporary use of these particular tanks should be assigned to Class 1 but should require Agency approval prior to operation. However, there were a few members who believed that there may be circumstances where the addition of such units would merit a Class 2 ranking. Therefore, the Committee decided that EPA should solicit public comments on these various approaches and consider the comments when developing the final rule.

In today's proposal, the Agency is indicating that the addition of "new treatment tanks to be used for up to 90 days for neutralization, dewatering, phase separation, or component separation" is a Class 1 modification but requires prior Agency approval. (*See* item G(1)(d).) While the temporary use of these units does not appear to warrant imposing the Class 2 process, EPA does believe that Agency review of the proposed use of these tanks is important. Agency approval will ensure that the new units will be governed by the applicable Part 264 standards (and the Part 269 air emissions standards, when promulgated). EPA reiterates that the Committee did not agree on this classification; however, we believe that the public will benefit from seeing specific proposed language in Appendix I. EPA particularly invites comments on these issues to assist in its final decision.

As indicated in item G(1)(c), the addition of units conducting these four specific treatment operations for more than 90 days is a Class 2 modification, without limitation to the resulting capacity increase. This will allow facilities to institute these simple operations even if their current permitted treatment capacity is limited.

Tank replacements were designated by the Committee as Class 1 changes. (*See* item G(3).) Committee members acknowledged it may not always be possible to replace a tank with another tank of exactly the same capacity. Therefore, the Committee agreed that the tank replacement provision should allow a 10 percent variation in the size of the replacement tank, but it would not authorize the use of any additional capacity gained in this fashion. As discussed above, increases in the permitted tank capacity would require a Class 2 modification (if limited to 25 percent or less). (For example, if a 5,000-gallon tank is replaced by a 5,500-gallon tank, the replacement would be a Class 1 modification if the tank will be used to treat or store only 5,000-gallons or less. The facility could use the entire 5,500-gallons after a Class 2 modification.) The 10 percent variation would further be limited to a maximum of 1,500 gallons since tanks of 15,000 gallons and more are usually made to order and therefore would not have to deviate from the original tank size.

The Agency has proposed this modification as agreed upon by the Committee. However, it questions whether it is necessary to prohibit the owner/operator's use of the extra 10% capacity in replacement tanks under Class 1 modifications. It believes this provision may be difficult to enforce and will provide limited if any additional protection to human health and the environment. The Agency specifically solicits comments on this issue.

ii. *Surface impoundments.* The surface impoundment permitting standards of Part 264 Subpart K are designed to prevent any migration of wastes out of the impoundment to adjacent soil, ground-water, or surface water. The Committee decided to allow Class 2 permit modifications only under the following circumstances involving surface impoundments: (1) Changes to an impoundment that do not increase the unit's capacity and that do not modify the liner or leak detection system, (2) changes to management practices at the impoundment, and (3) the addition of new wastes under certain circumstances (as discussed in section IV.C.4 of the preamble). Class 3 permit modifications would be required for other changes, such as increased capacity or replacement of an impoundment.

iii. *Waste piles.* The Committee developed separate permit modification categories for two general types of waste piles. The first type of waste pile is one that is not inside or under a cover providing protection from precipitation, or that otherwise does not qualify for the exemptions provided in § 264.250(c). Such units are referred to as "unenclosed waste piles," and are treated in the same manner as landfills for purposes of permit modifications in today's proposal. Since unenclosed waste piles are subject to essentially the same design, operating, monitoring, and inspection requirements as landfills, the Committee decided that the permit modification requirements for these waste pile units should also be similar. The specific landfill permit modification requirements are discussed in the following section.

The second type of waste pile unit is the "enclosed waste pile"—i.e., waste piles that comply with § 264.250(c). Such waste piles are exempt from the ground-water monitoring requirements of Subpart F and from the § 264.251 requirements for liners, leachate collection systems, run-on and run-off control, and wind dispersal control. Section I of the Appendix lists the modifications that the Committee designated for enclosed waste piles.

Note that item I(1)(b) provides for unit changes or additions resulting in a capacity increase of 25 percent or less as a Class 2 modification. This is the same modification as allowed for tank and container units. Further discussion of the operation and limitations of this Class 2 change can be found in section IV.C.5.i above.

iv. *Landfills.* The permitting standards for landfills are found in Part 264, Subpart N. The Committee's list of permit modifications that are appropriate for landfills are presented in section J of Appendix I. (As discussed above, these modifications would also apply to unenclosed waste piles.)

The Committee specified most changes at landfill facilities as Class 3 modifications. Class 2 changes are indicated only for: (1) Limited unit modifications that would not affect a liner, leachate collection or detection system, run-off control or final cover system, (2) changes to management practices at the landfill, and (3) the addition of new wastes under certain circumstances (see section IV.C.4 of the preamble).

v. *Land treatment.* The list of modifications to land treatment facilities presented in section K of Appendix I is fairly extensive, reflecting the detailed regulatory provisions governing these facilities in Part 264, Subpart M. The modifications identified relate primarily to changes in land treatment operating practices, monitoring of the unsaturated zone, and the treatment demonstration. The items listed are quite specific and self-explanatory.

Currently, three types of permit changes for land treatment facilities are minor modifications. First, § 270.42(l) allows a minor modification for minor changes to the treatment program requirements for the purpose of improving treatment of hazardous constituents. Since the elements of the treatment program (identified in § 264.271) cover a wide range of possible permit conditions, this minor modification raises the question of what constitutes a "minor change" that "improves treatment of hazardous constituents." Today's proposal does not contain a provision similar to § 270.42(l), but instead identifies many potential changes to elements of the treatment program and classifies each one separately. However, the Committee agreement assigned either a Class 2 or 3 modification level to all such changes, thereby requiring a more extensive approval process than in the current system, if the modification were to qualify as minor under this provision. The Agency believes that the Committee may have inadvertently eliminated some land treatment changes that are currently allowed as minor modifications and for which a Class 1 modification with prior Director approval would be appropriate. Therefore, EPA is particularly interested

in comments on the relation of this new classification to the current provision of § 270.42(l).

The second land treatment minor modification is for a minor change to a permit condition to reflect the results of a treatment demonstration (§ 270.42(m)). This provision is retained in today's proposal, but it is a Class 2 modification and includes the additional condition that the performance standards must still be met (item K(15)). Therefore, such changes may require more time for approval under today's proposed system. The Agency welcomes comment on this new classification.

Finally, a third minor modification category allows a second treatment demonstration when the results of the first demonstration are not conclusive (§ 270.42(n)). This provision is essentially unchanged since it is identified as a Class I change that requires prior director approval (item K(16)).

The Agency is also proposing conforming changes to the land treatment demonstration permitting provisions of § 270.63. Section 270.63(d) currently specifies procedures for modifying the second phase of a land treatment permit based on results of field tests or laboratory analyses; however, these procedures are designed, in part, to provide an opportunity to appeal the Director's decision on a minor modification to the second phase permit. Since today's proposed modification approach provides for the appeal of any permit modification (*see* discussion at IV.B.6 above), there is no need to specify special appeals procedures. Therefore, an amendment to § 270.63(d)(2) is proposed that would remove the inappropriate reference to minor modifications. In addition, minor conforming changes are included by deleting the reference to minor modification in section (d)(1), and combining existing section (d)(3) with (d)(1) for simplicity.

vi. *Incinerators.* Permits for incineration facilities specify operating requirements that are established on a case-by-case basis to ensure that the incinerator will comply with the performance standards of Part 264, Subpart O. Usually the operating requirements are defined after a trial burn is performed in accordance with § 270.62. In considering the various changes that may be needed at incineration facilities, the Committee also had to determine when changes in trial burn plans may be necessary. Section L of Appendix I contains the result of the Committee's deliberations on incinerators.

Items L(1) (a) and (b) address modifications to incinerator units that result in capacity increases. Measures of incinerator capacity commonly used in permits are (1) Thermal feed rate, (2) waste feed rate, or (3) organic chlorine feed rate. A Class 2 permit modification may be obtained for capacity increases up to 25 percent; beyond that a Class 3 is required. Item L(1)(c) specifies particular unit modifications that the Committee believed should be treated as Class 3; even if these changes result in less than a 25 percent capacity increase, they would still require the Class 3 approval process. Furthermore, all of the changes identified in item L(1) would require trial burns unless the Director decided that the information that would be gained through the trial burn could be reasonably developed through other means.

The Agency would like to point out that the trial burn requirements specified by the Committee for item L(1) have been slightly altered in today's proposal. The Committee agreement required trial burns for the item L(1) changes just discussed, but it did not allow the Director to waive this requirement if the permittee could make an acceptable demonstration that the performance standards would be met. Current EPA requirements pertaining to trial burns allow substitute demonstrations in lieu of trial burns under certain circumstances—normally where data are available from operational or trial burns at similar units. (See §§ 270.19(c), 270.62(b)(5), and 264.244(c).) The Agency does not believe that the Committee intended to foreclose this alternate demonstration, so the language has been changed to be consistent with existing incinerator regulations. EPA similarly adjusted other items where the Committee language appears (e.g., items L(4)(a) and L(5)(a)).

Item L(2) addresses changes to incinerator operating or monitoring requirements that would not be likely to affect compliance with the performance standards. Examples of these Class 2 changes include modification of the waste feed systems, quench systems, kiln refractory, or control instrumentation. The Director may require a trial burn if he or she believes there is a possibility that the modification could affect the capability of the incinerator to meet performance standards or could significantly change the operating conditions.

Changes to operating requirements are identified in item L(4). The Committee designated as Class 3 modifications those alterations of operating requirements that relate to the unit's capability to meet the performance standards. Changes to other operating requirements could be made under the Class 2 process. Trial burns may be required for the changes listed in item L(4)(a).

Due to the nature of the trial burn and shakedown periods for new incinerators, changes often need to be made in the trial burn plan or in the interim permit conditions that apply to the incinerator before and immediately after the trial burn is conducted. Such changes are outlined in item L(6). Note that items L(6) (b), (c), and (d) are essentially unchanged from the current minor modifications in 270.42 (k), (j), and (i), respectively.

The Agency added item L(7) to the list of incinerator changes developed by the Committee. Where incinerator fuels are specifically identified in the permit, EPA believes that facilities should have the flexibility to use an alternate fuel based on availability and market prices. (For example, substitution of propane for natural gas.) Such changes are considered insignificant and are proposed to be Class 1 modifications.

6. Closure

The closure activities identified in section D of Appendix I stem from Part 264, Subpart G. Since § 264.112(a) specifies that the approved closure plan becomes incorporated as a condition of the permit, any changes to the plan must be made through the permit modification process. The Committee agreed to the classification of specific closure plan changes as presented in Appendix I, item D(1).

The Committee also addressed the possible need to add units to perform closure activities. If the addition of units is already specified in sufficient detail in the approved closure plan, then a permit modification should not be necessary. However, the creation of units not anticipated in the closure plan will require a permit modification to amend the plan (*see* § 264.112(c)). It also raises the issue of the facility undertaking activities that were not initially identified in the permit. In practice, it is not always possible for the permittee or the Agency, at the time of permit issuance, to anticipate the specific methods that will be best suited to close a facility ten or more years in the future. Therefore, the Agency expects that facility owners will frequently introduce units during closure that were not included in the original closure plan.

The Committee decided that adding units to perform closure should carry the same classification as adding the same

types of units for other reasons (discussed in preceding sections of the preamble). However, the Committee did not believe it was necessary to require a Class 3 modification for adding tanks, containers, or enclosed waste piles for closure that result in a capacity increase of more than 25 percent. It was recognized that closure activities are generally of relatively short duration, and therefore capacity increases resulting from the addition of these units to perform closure would be temporary. Items D (2) and (3) in the Appendix I list contain the classification of these closure activities.

The Committee also considered the special case of tanks that perform neutralization, dewatering, phase separation, and component separation. (*See* the earlier discussion on tanks in section IV.C.5.i of this preamble.) As described earlier, the Agency expects these four treatment operations to become increasingly available through the use of MTUs. MTUs are particularly well adapted to cleanup activities and closure of hazardous waste facilities. However, as was the case with the deliberations on the use of these particular tank units for non-closure activities, the Committee could not reach consensus on the appropriate classification for these units when used to perform closure. Therefore, in today's proposal the Agency has indicated that the temporary addition of these specific tank units would be a Class 1 modification but would require Agency approval. (*See* item D(3)(f)). This is consistent with the proposed classification for these same units if used for fewer than 90 days to perform non-closure activities. Again, EPA particularly invites public comments on this approach to assist its final decision.

7. Post-Closure

Permitted fadilities that must conduct post-closure activities must have a post-closure plan in their permits. Once approved, this plan becomes a condition of the RCRA permit (*see* § 264.118(a)).

The Committee agreement identified two types of changes to the post-closure plan, items E (1) and (2) of Appendix I. EPA is proposing to add three additional items to this list that are logical outgrowths of the Committee agreement. The first is the case where a facility requests a reduction to the post-closure care period (item E(3)). The Agency believes that this type of modification could substantially alter the post-closure program, and therefore warrants designation as a Class 3 change.

The two other additions to the Committee list are: (1) Changes in the expected year of final closure (Class 1), and (2) changes in the post-closure plan that need to be made as a result of events occurring at the facility during the active life of the facility, including closure (Class 2). These two types of permit modifications are specifically called for in § 264.118(d)(2). The Committee addressed similar issues regarding the closure plan, so the Agency has merely adopted parallel classifications for these post-closure plan changes (items E (4) and (5)).

8. HSWA Corrective Action

The Committee spent some time considering facility changes that may be needed to implement the corrective action requirements of HSWA. It was agreed that most corrective action activities would fall into the categories of changes already developed by the Committee (Appendix I). Further speculation as to other permit modifications necessary to comply with HSWA corrective action would be premature since a full regulatory program is still being developed. Therefore, the Committee resolved that EPA should develop specific classifications as needed for corrective action when the Agency develops proposed and final rules on the subject.

D. Conforming Changes to Permitting Regulations

Today's proposed changes to §§ 270.41 and 270.42 are based on the Negotiating Committee's agreement and would significantly alter the procedures for facilities to obtain permit modifications. However, the Committee recognized that it could not identify all of the related regulatory changes that would be needed to support the agreement. Therefore, the Committee requested that EPA perform an exhaustive review of the relevant RCRA regulations and propose the necessary conforming changes in this rulemaking. The Agency has identified several other areas in the current RCRA permitting regulations—in addition to §§ 270.41 and 270.42—that it believes would need to be amended to be consistent with the Committee's agreement and the regulatory language in today's proposal. The following discussion briefly explains the additional minor changes to Parts 124, 264 and 270 that are being proposed today.

Section 124.5 generally identifies which permit modifications must follow the full Part 124 permitting procedures. In § 124.5(c) we are proposing to add a reference to § 270.42(c)—procedures for Class 3 permit modifications—to indicate that Class 3 changes must comply with the Part 124 procedures. Section 124.5(c)(3) is modified in today's proposal to remove the reference to RCRA "minor modifications" and replace it with "Class 1 and 2 modifications", indicating that they are not subject to the full permitting requirements.

Part 264 specifies that the permittee must request a permit modification to amend an approved closure plan (§ 264.112(c)) or post-closure plan (§ 264.118(d)). The request must include a copy of the amended plan for approval by the Agency. However, since today's proposal would allow certain changes to closure or post-closure plans as a Class 1 modification, in such cases the permittee would not "request" a modification or seek "approval" of the amended plan. Instead, the permittee would notify the Agency of the Class 1 change, and the Agency may review (and possibly reject) the modification (*See* section IV.B.1 for detailed discussion.) There is no approval action necessary by the Agency for the Class 1 changes to these plans. Therefore, the Agency is proposing minor changes to §§ 264.112(c) and 264.118(d) to allow "written notification" and Agency "review" of Class 1 modifications. Also in Part 264, the comment at § 264.54 is deleted since it describes minor modifications to contingency plans which would be inconsistent with the proposed modification classification.

Several conforming changes are identified for Part 270. First, three definitions are proposed to be added to § 270.2. "Facility mailing list" is defined as meaning the list maintained by the Agency in accordance with § 124.10(c)(1)(viii); this list will be used to notify interested parties of permit modifications (as discussed in section IV.B of this preamble). "Component" and "functionally equivalent component" are included in the definition section to more clearly specify the types of equipment changes that are allowed as Class 1 modifications in accordance with Item A(3) of Appendix I (discussed in section IV.C.1 above).

In a second change to Part 270, the Agency is proposing to add a provision to § 270.4(a) stating "the permit may be modified upon the request of the permittee as set forth in § 270.42." This change is necessary to coincide with the restructuring of § 270.42 to address only permittee-initiated modifications.

Another change is needed in § 270.30(k)(2) since this provision does not allow the permittee to use the modified portion of the facility until a certification is submitted to the Agency indicating the modification is in accordance with the permit and the Agency has had an opportunity to

inspect the modification. Under today's proposed modification scheme, the requirements of § 270.30(k)(2) are not appropriate in many cases, particularly for Class 1 modifications and temporary authorizations. Therefore, the proposed amendment to this provision would allow the use of the modified portion of the facility as long as such use is in conformance with § 270.42.

Finally, the Agency proposes to delete the reference to "minor modification" in § 270.40 (transfer of permits by modification) and § 270.62 (incinerator permits). These provisions continue to reference the permittee-initiated modifications that are available under proposed § 270.42.

V. Other Issues

A. Permit Modification Form

Currently, there is no prescribed format for submitting permit modification requests. The RCRA regulations provide that in the case of a permit modification, the Director may require the submission of an updated application. (*See* § 124.5(C).) Today's proposal would amend § 270.42 to provide a more specific indication of the information that the permittee would have to submit. However, even with these proposed changes, each permittee seeking a permit modification will have to decide the most appropriate way to assemble his or her submission.

Certain members of the Committee suggested that changes at interim status facilities occur routinely, and that correspondence to the Agency is simplified by the use of the Part A permit application form. Of course, as discussed elsewhere in this preamble, the procedures for making changes at interim status facilities are simpler than those for making changes at permitted facilities. However, Committee members still credited the use of the Part A form as contributing to a more efficient process for gaining approval of facility changes. They suggested that a form for requesting permit modifications might serve a comparable function.

The Committee therefore examined the use of a standard form for permit modification requests. Although the final Committee agreement did not prescribe the use of such a form, there was general support for the idea. Members believed that a standard form would accomplish the following objectives:

- Guide the applicant in preparing the modification request;
- Facilitate Agency and public review of the request;
- Serve as the primary vehicle for notification to all persons on the facility mailing list;
- Assist the applicant in assuring that all appropriate parts of the permit have been changed;
- Help the applicant and the Agency to determine the proper modification classification; and
- Identify other permitting requirements that are also affected (e.g., permits for other media, such as air or water).

Information that might be included on a permit modification form would include (1) Facility name, address, EPA ID number, contact person, and phone number; (2) dates of initial permit and subsequent modifications; (3) a brief description of the requested modification; (4) a list of other environmental permits affected (if any); (5) a summary of voluntary public participation activities related to the modification (if any); (6) proposed classification of the modification request; and (7) components of the permit to be modified. The form could provide a list of typical permit components (e.g., contingency plan, ground-water system, closure plan) so that the applicant would merely check a box as to whether or not that item were changed. The Committee believed that the form should not exceed one or two pages. However, explanatory material would have to be attached to the form in most cases.

The Agency solicits comments on the desirability, contents, and format of such a form. In particular, the Agency is interested in whether such a form would be useful; whether it should be optional or required; whether it should be referenced in the regulations (like the Part A form) or presented as guidance; and what information would be useful for the permitting agency, the applicant, and the public. EPA will consider public comments on this issue when deciding whether or not to pursue the development of a permit modification form.

B. Technical Review and Public Education Fund

Several Committee members suggested that a fund should be established to support site-specific citizen education regarding proposed permit modifications. It was recognized that citizens often do not have the technical background to make judgments on the merits of many hazardous waste facility changes. Indeed, the design of these facilities can involve scientific and engineering skills in several disciplines. Consequently, Committee members thought that a general fund would be useful in providing technical support to the public commenting on permit modification requests or, more broadly, on permit applications.

Individual members of the Committee volunteered to serve on an informal working group to address the need for and feasibility of allocating funds for local technical review of permit modification requests and for public education on hazardous waste issues. One of the alternatives that will be investigated is the establishment of a special fund to enable citizens to obtain independent qualified technical experts to evaluate proposed facility changes. EPA believes that this type of evaluation would enable the local citizens to make constructive technical suggestions for improvements or to confirm that the permittee's proposed changes are technically sound and protective of human health and the environment.

VI. State Authority

A. Applicability of Rules in Authorized States

Under section 3006 of RCRA, EPA may authorize qualified States to administer and enforce the RCRA program within the State. (*See* 40 CFR Part 271 for the standards and requirements for authorization.) Following authorization, EPA retains enforcement authority under sections 3008, 7003, and 3013 of RCRA, although authorized States have primary enforcement responsibility.

Prior to the Hazardous and Solid Waste Amendments of 1984 (HSWA), a State with final authorization administered its hazardous waste program entirely in lieu of EPA administering the Federal program in that State. The Federal requirements no longer applied in the authorized State, and EPA could not issue permits for any facilities in the State that the State was authorized to permit. When new, more stringent Federal requirements were promulgated or enacted, the State was obliged to enact equivalent authority within specified time frames. Federal requirements did not take effect in an authorized State until the State adopted the requirements as State law.

In contrast, under section 3006(g) of RCRA, 42 U.S.C. 6926(g), new requirements and prohibitions imposed by HSWA take effect in authorized States at the same time that they take effect in nonauthorized States. EPA is directed to carry out those requirements and prohibitions in authorized States, including the issuance of permits, until the State is granted authorization to do so. While States must still adopt HSWA-related provisions as State law to retain final authorization, HSWA

applies in authorized States in the interim.

B. Effect on State Authorizations

Today's proposal would be imposed pursuant to pre-HSWA authority. Therefore, those standards would not be effective in authorized States, but would be applicable in those States that do not have interim or final authorization. In authorized States, the requirements will not be applicable until the State revises its program to adopt equivalent requirements under State law.

It should be noted that authorized States are only required to modify their programs when EPA promulgates Federal standards that are more stringent or broader in scope than the existing Federal standards. Section 3009 of RCRA allows States to impose standards more stringent than or in addition to those in the Federal program. The amendments proposed in today's rule are considered to be less stringent than or reduce the scope of the existing Federal requirements. Therefore, authorized States would not be required to modify their programs to adopt requirements equivalent to the provisions contained in today's proposal.

VII. Effective Date

This rule, if promulgated, would be effective 30 days after final promulgation. Section 3010(b) of RCRA provides that regulations concerning permits for the treatment, storage, or disposal of hazardous waste shall take effect six months after the date of promulgation. However, section 3010(b)(1) provides for a shorter period if the Agency finds that the regulated community does not need six months to comply with the new regulation.

Since the proposed rule is designed to expedite permit modifications requested by the regulated community, the Agency believes that the regulated community will not need six months to come into compliance. Therefore, these amendments, when final, will be effective 30 days after promulgation, as provided under the Administrative Procedures Act.

VIII. Regulatory Analysis

A. Regulatory Impact Analysis

Under Executive Order 12291, EPA must determine whether a regulation is "major" and thus whether EPA must prepare and consider a Regulatory Impact Analysis in connection with the rule. Today's proposal is not major because it will not result in an annual effect on the economy of $100 million or more, nor will it result in an increase in costs or prices to industry. There will be no adverse impact on the ability of the U.S.-based enterprises to compete with foreign-based enterprises in domestic or export markets. Therefore, the Agency does not believe a Regulatory Impact Analysis is required for today's rule. The proposed rule has been submitted to the Office of Management and Budget (OMB) for review in accordance with Executive Order 12291.

B. Regulatory Flexibility Act

Under the Regulatory Flexibility Act, 5 U.S.C. 601 et seq., at the time an agency publishes any proposed or final rule, it must prepare a regulatory flexibility analysis that describes the impact of the rule on small entities unless the Administrator certifies that the rule will not have a significant economic impact on a substantial number of small entities.

The amendmehts proposed today provide additional flexibility for hazardous waste treatment, storage, and disposal facilities to undertake changes and overall do not affect the compliance burdens of the regulated community. Therefore, pursuant to 5 U.S.C. 601(b), I certify that this regulation will not have a significant economic impact on a substantial number of small entities.

List of Subjects

40 CFR Part 124

Administrative practice and procedure, Hazardous waste, Waste treatment and disposal.

40 CFR Part 264

Corrective action, Hazardous waste, Reporting and recordkeeping requirements, Waste treatment and disposal.

40 CFR Part 270

Administrative practice and procedure, Hazardous waste, Reporting and recordkeeping requirements, Permit application requirements, Permit modification procedures, Waste treatment and disposal.

Lee M. Thomas,

Administrator.

Date: September 13, 1987.

Therefore, it is proposed that Subchapter I of Title 40 be amended as follows:

PART 124—PROCEDURES FOR DECISIONMAKING

1. The authority citation for Part 124 continues to read as follows:

Authority: Resource Conservation and Recovery Act, 42 U.S.C. 6901 et seq.; Safe Drinking Water Act, 42 U.S.C. 300(f) et seq.; Clean Water Act, 33 U.S.C. 1251 et seq.; and Clean Air Act, 42 U.S.C. 1857 et seq.

2. Section 124.5 is amended by revising paragraphs (c)(1) and (c)(3) to read as follows:

§ 124.5 Modification revocation and reissuance, or termination of permits.

* * * * *

(c) *(Applicable to State programs, see §§ 123.25 (NPDES, 145.11 (UIC), 233.26 (404), and 271.14 (RCRA)).* (1) If the Director tentatively decides to modify or revoke and reissue a permit under §§ 122.62 (NPDES), 144.39 (UIC), 233.14 (404), 270.41 or 270.42(c) (RCRA), he or she shall prepare a draft permit under § 124.6 incorporating the proposed changes. The Director may request additional information and, in the case of a modified permit, may require the submission of an updated application. In the case of revoked and reissued permits, the Director shall require the submission of a new application.

* * * * *

(3) "Minor modifications" as defined in §§ 122.63 (NPDES), 144.41 (UIC), and 233.16 (404), and "Class 1 and 2 modifications" as defined in § 270.42 (a) and (b) (RCRA) are not subject to the requirements of this section.

PART 264—STANDARDS FOR OWNERS AND OPERATORS OF HAZARDOUS WASTE TREATMENT, STORAGE, AND DISPOSAL FACILITIES

3. The authority citation for Part 264 continues to read as follows:

Authority: Sections 1006, 2002(a), 3004, and 3005 of the Solid Waste Disposal Act, as amended by the Resource Conservation and Recovery Act of 1976, as amended (42 U.S.C 6905, 6912(a), 6924, and 6925).

§ 264.54 [Amended]

4. Section 264.54 is amended by removing the comment.

5. In § 264.112, paragraphs (c) introductory text, (c)(1), and (c)(2) introductory text are revised to read as follows

§ 264.112 Closure plan; amendment of plan.

* * * * *

(c) *Amendment of plan.* The owner or operator must submit a written notification of or request for a permit modification to authorize a change in operating plans, facility design, or the approved closure plan in accordance with the applicable procedures in Parts 124 and 270. The written notification or request must include a copy of the amended closure plan for review or approval by the Regional Administrator.

(1) The owner or operator may submit a written notification or request to the Regional Administrator for a permit modification to amend the closure plan at any time prior to the notification of partial or final closure of the facility.

(2) The owner or operator must submit a written notification of or request for a permit modification to authorize a change in the approved closure plan whenever:

* * * * *

6. In § 264.118, paragraphs (d) introductory text, (d)(1), and (d)(2) introductory text are revised to read as follows:

§ 264.118 Post-closure plan; amendment of plan.

* * * * *

(d) *Amendment of plan.* The owner or operator must submit a written notification of or request for a permit modification to authorize a change in the approved post-closure plan in accordance with the applicable requirements in Parts 124 and 270. The written notification or request must include a copy of the amended post-closure plan for review or approval by the Regional Administrator.

(1) The owner or operator may submit a written notification or request to the Regional Administrator for a permit modification to amend the post-closure plan at any time during the active life of the facility or during the post-closure care period.

(2) The owner or operator must submit a written notification of or request for a permit modification to authorize a change in the approved post-closure plan whenever:

* * * * *

PART 270—EPA ADMINISTERED PERMIT PROGRAMS: THE HAZARDOUS WASTE PERMIT PROGRAM

7. The authority citation for Part 270 continues to read as follows:

Authority: Secs. 1006, 2992, 3005, 3007, 3019, and 7004 of the Solid Waste Disposal Act, as amended by the Resource Conservation and Recovery Act of 1976, as amended (42 U.S.C. 6905, 6912, 6925, 6927, 6939, and 6974).

8. Section 270.2 is amended by adding the following definitions in alphabetical order:

§ 270.2 Definitions.

* * * * *

Component means any constituent part of a unit or group of unit constituent parts which are assembled to perform a specific function (e.g., a pump seal, pump, kiln liner, kiln thermocouple, entire kiln, tank farm scrubber).

* * * * *

Facility mailing list means the mailing list for a facility maintained by EPA in accordance with 40 CFR 124.10(c)(1)(viii).

* * * * *

Functionally equivalent component means a component which performs the same function or measurement and which meets or exceeds the performance specifications of another component.

* * * * *

9. In § 270.4, the last sentence of paragraph (a) is revised to read as follows:

§ 270.4 Effect of a permit.

(a) * * *

However, a permit may be modified, revoked and reissued, or terminated during its term for cause as set forth in §§ 270.41 and 270.43, or the permit may be modified upon the request of the permittee as set forth in § 270.42.

* * * * *

10. In § 270.30, paragraph (k)(2) introductory text is revised to read as follows:

§ 270.30 Conditions applicable to all permits.

* * * * *

(k) * * *

(2) *Anticipated noncompliance.* The permittee shall give advance notice to the Director of any planned changes in the permitted facility or activity which may result in noncompliance with permit requirements. For a new facility, the permittee may not treat, store, or dispose of hazardous waste; and for a facility being modified, the permittee may not treat, store, or dispose of hazardous waste in the modified portion of the facility except as provided in § 270.42, until:

* * * * *

11. Section 270.40 is revised to read as follows:

§ 270.40 Transfer of permits.

Transfers by modification. A permit may be transferred by the permittee to a new owner or operator only if the permit has been modified or revoked and reissued (under § 270.41(b)(2) or § 270.42) to identify the new permittee and incorporate such other requirements as may be necessary under the appropriate Act.

12. Section 270.41 is amended by removing paragraph (a)(5), redesignating existing paragraph (a)(6) as (a)(5), and revising the introductory paragraph and paragraph (a)(3) introductory text to read as follows:

§ 270.41 Modification or revocation and reissuance of permits.

When the Director receives any information (for example, inspects the facility, receives information submitted by the permittee as required in the permit (see § 270.30), receives a request for revocation and reissuance under § 124.5 or conducts a review of the permit file) he or she may determine whether one or more of the causes listed in paragraphs (a) and (b) of this section for modification, or revocation and reissuance or both exist. If cause exists, the Director may modify or revoke and reissue the permit accordingly, subject to the limitations of paragraph (c) of this section, and may request an updated application if necessary. When a permit is modified, only the conditions subject to modification are reopened. If a permit is revoked and reissued, the entire permit is reopened and subject to revision and the permit is reissued for a new term. (See 40 CFR 124.5(c)(2).) If cause does not exist under this section, the Director shall not modify or revoke and reissue the permit, except on request of the permittee. If a permit modification is requested by the permittee, the Director shall approve or deny the request according to the procedures of 40 CFR 270.42. Otherwise, a draft permit must be prepared and other procedures in Part 124 (or procedures of an approved State program) followed.

* * * * *

(a) * * *

(3) *New statutory requirements or regulations.* The standards or regulations on which the permit was based have been changed by statute, through promulgation of new or amended standards or regulations, or by judicial decision after the permit was issued.

* * * * *

13. Section 270.42 is revised to read as follows:

§ 270.42 Permit modification at the request of the permittee.

(a) *Class 1 modifications.* (1) Except as provided in paragraph (a)(2) of this section, the permittee may put into effect Class 1 modifications listed in Appendix I of this section under the following conditions:

(i) The permittee must notify the Director concerning the modification by certified mail or other means that establish proof of delivery within 7 calendar days after the change is put into effect. This notice must specify the

changes being made to permit conditions or supporting documents referenced by the permit and must explain why they are necessary.

(ii) The permittee must notify by mail all persons on the facility mailing list, maintained by the Director in accordance with 40 CFR 124.10(c)(viii), about the modification. This notification must be made within 14 calendar days after the change is put into effect.

(iii) Any person may request the Director to review, and the Director may for cause reject, any Class 1 modification. The Director must inform the permittee by certified mail that a Class 1 modification has been rejected, explaining the reasons for the rejection. If a Class 1 modification has been rejected, the permittee must comply with the original permit conditions.

(2) Permit modifications identified in Appendix I by an asterisk may be made only with the prior written approval of the Director.

(b) *Class 2 modifications.* (1) For Class 2 modifications, listed in Appendix I of this section, the permittee must submit a modification request to the Director that:

(i) Describes the exact change to be made to the permit conditions and supporting documents referenced by the permit;

(ii) Identifies that the modification is a Class 2 modification;

(iii) Explains why the modification is needed; and

(iv) Provides the applicable information required by 40 CFR 270.13 through 270.21 and 270.62.

(2) The permittee must send a notice of the modification request to all persons on the facility mailing list maintained by the Agency and must publish this notice in a local newspaper. This notice must be mailed and published on the date of submission of the modification request, and the permittee must provide to the Director evidence of the mailing and publication. The notice must include:

(i) Announcement of a 60-day comment period, in accordance with § 270.42(b)(5), and the name and address of an Agency contact to whom comments must be sent;

(ii) Announcement of the date, time, and place for a public meeting held in accordance with § 270.42(b)(4);

(iii) Name and telephone number of the permittee's contact person;

(iv) Name and telephone number of an Agency contact person;

(v) Location where copies of the modification request and any supporting documents can be viewed and copied; and

(vi) The following statement "The permittee's compliance history during the life of the permit being modified is available from the Agency contact person."

(3) The permittee must place a copy of the permit modification request and supporting documents in a location accessible to the public in the vicinity of the permitted facility.

(4) The permittee must hold a public meeting no fewer than 15 days after the publication of the notice required in paragraph (b)(2) of this section and no fewer than 15 days before the close of the 60-day comment period. The meeting must be held to the extent practicable in the vicinity of the permitted facility.

(5) The public shall be provided 60 days to comment on the modification request. The comment period will begin on the date the permittee submits the modification request to the Agency. Comments should be submitted to the Agency contact identified in the public notice.

(6)(i) No later than 90 days after receipt of the notification request, the Director must:

(A) Approve the modification request, with or without changes, and modify the permit accordingly;

(B) Deny the request;

(C) Notify the permittee that he or she will decide on the request within the next 30 days; or

(D) Approve the request, with or without changes, as a temporary authorization having a term of up to 180 days.

(ii) If the Director notifies the permittee of a 30-day extension for a decision, he or she must, no later than 120 days after receipt of the notification request:

(A) Approve the modification request, with or without changes, and modify the permit accordingly;

(B) Deny the request; or

(C) Approve the request, with or without changes, as a temporary authorization having a term of up to 180 days.

(iii) If the Director fails to make one of the decisions specified in paragraph (b)(6)(ii) of this section by the 120th day after receipt of the modification request, the permittee is automatically authorized to conduct the activities described in the modification request for up to 180 days, without formal Agency action. The authorized activities must be conducted as described in the permit modification request and must be in compliance with all appropriate standards of 40 CFR Part 265 and, to the extent practicable, with those of 40 CFR Part 264. If the Director approves, with or without changes, or denies the modification request during the term of the temporary authorization provided for in paragraphs (b)(6)(i), (b)(6)(ii), or (b)(6)(iii) of this section, such action cancels the temporary authorization.

(iv) In the case of an automatic authorization under paragraph (b)(6)(iii) of this section, if the Director has not made a final approval or denial of the modification request within 250 days after receipt of the request, the permittee must at or about that time notify persons on the facility mailing list, and make a reasonable effort to notify other persons who submitted written comments on the modification request, that:

(A) The permittee has been authorized temporarily to conduct the activities described in the permit modification request, and

(B) Unless the Director acts to give final approval or denial of the request by the end of the 180-day period of the temporary authorization, the permittee will receive authorization to conduct such activities for the life of the permit.

(v) If the Director does not approve or deny a modification request before the end of the 180-day automatic authorization period, the permittee is authorized to conduct the activities described in the permit modification request for the life of the permit unless modified later under § 270.41 or § 270.42. The authorized activities must be conducted as described in the permit modification request and must be in compliance with all appropriate standards of 40 CFR Part 265 and, to the extent practicable, with those of 40 CFR Part 264.

(vi) In making a decision to approve or deny a modification request, including a decision to issue a temporary authorization, the Director must consider all written comments submitted to the Agency during the public comment period and must respond in writing to these comments in his or her decision.

(vii) With the written consent of the permittee, the Director may extend indefinitely or for a specified period the time periods for final approval or denial of a modification request.

(7) The Director may deny or change the terms of a Class 2 permit modification request under paragraphs (b)(6)(i), (b)(6)(ii) and (b)(6)(iii) of this section for the following reasons:

(i) The modification request is incomplete;

(ii) The requested modification does not comply with the appropriate requirements of 40 CFR Part 264 or other applicable requirements; or

(iii) The conditions of the modification fail to protect human health and the environment.

(8) The permittee may perform any construction associated with a Class 2 permit modification request after the submission of the request.

(c) *Class 3 modifications.* (1) For Class 3 modifications listed in Appendix I of this section, the permittee must submit a modification request to the Director that:

(i) Describes the exact change to be made to the permit conditions and supporting documents referenced by the permit;

(ii) Identifies that the modification is a Class 3 modification;

(iii) Explains why the modification is needed; and

(iv) Provides the applicable information required by 40 CFR 270.13 through 270.21 and 270.62.

(2) The permittee must send a notice of the modification request to all persons on the facility mailing list maintained by the Agency and must publish this notice in the local newspaper. This notice must be mailed and published on the date of submission of the modification request, and the permittee must provide to the Director evidence of the mailing and publication. The notice must include:

(i) Announcement of a 60-day comment period, and a name and address of an Agency contact to whom comments must be sent;

(ii) Announcement of the date, time, and place for a public meeting on the modification request, in accordance with § 270.42(c)(4)(i);

(iii) Announcement that a second public meeting may be held if a written request is made to permittee's contact person within a specified period (of at least 15 days) after the announced public meeting;

(iv) Name and telephone number of the permittee's contact person;

(v) Name and telephone number of an Agency contact person;

(vi) Location where copies of the modification request and any supporting documents can be viewed and copied; and

(vii) The following statement: "The permittee's compliance history during the life of the permit being modified is available from the Agency contact person."

(3) The permittee must place a copy of the permit modification request and supporting documents in a location accessible to the public in the vicinity of the permitted facility.

(4) (i) The permittee must hold a public meeting no sooner than 15 days after the publication of the notice required in paragraph (c)(2) of this section and no fewer than 15 days before the close of the 60-day comment period. The meeting must be held to the extent practicable in the vicinity of the permitted facility, and the time and place of the meeting must be announced in the public notice.

(ii) The permittee may hold a second public meeting at its own discretion or if requested by a member of the public. If the permittee chooses to hold a meeting, the permittee must notify persons on the facility mailing list maintained by the Agency and must publish this notice in a local newspaper. This notice must include:

(A) Announcement of the extension of the public comment period if the second meeting cannot be scheduled 15 days before the close of the initial comment period;

(B) Announcement of the date, time, and place of the meeting; the meeting must be scheduled no fewer than 15 days after publication of the notice and no fewer than 15 days before the end of the initial or extended public comment period;

(C) Name and telephone number of the permittee's contact person;

(D) Name and telephone number of an Agency contact person; and

(E) Location where copies of the modification request and any supporting documents can be viewed and copied. The permittee must provide evidence to the Agency that the above-described notice was published in the local newspaper and mailed to persons on the facility mailing list.

(iii) The permittee may employ a neutral facilitator to chair the second meeting. In this case, the Director and the permittee must agree on the selection of the facilitator.

(5) The public shall be provided at least 60 days to comment on the modification request. The comment period will begin on the date the modification request is submitted to the Agency. Comments should be submitted to the Agency contact identified in the notice.

(6) After the conclusion of the 60-day (or extended) comment period, the Director must grant or deny the permit modification request according to the permit modification procedures of 40 CFR Part 124. In addition, the Director must consider and respond to all written comments received during the initial 60-day or extended comment period.

(d) *Public notice and appeals of permit modification decisions.* (1) The Director shall notify persons on the facility mailing list within 10 days of any decision under this section to grant or deny a permit modification request; to grant a temporary authorization; or to classify a modification not listed in Appendix I. The Director shall also notify such persons within 10 days after an automatic authorization for a Class 2 modification that goes into effect under § 270.42(b)(6) (iii) or (v).

(2) The Director's decision to grant or deny a permit modification request or temporary authorization under this section; the granting of an automatic authorization under § 270.42(b)(6) (iii) or (v); and the classification of a permit modification request under § 270.42(f), may be appealed under the permit appeal procedures of 40 CFR 124.19.

(e) *Temporary authorizations.* (1) Upon request of the permittee, the Director may, without prior public notice and comment, grant the permittee a temporary authorization in accordance with this subsection. Temporary authorizations must have a term of no fewer than 90 days and not more than 180 days. They may be reissued for an additional term of up to 180 days.

(2)(i) The permittee may request a temporary authorization for:

(A) Any Class 2 modification meeting the criteria in paragraph (3)(ii) of this section, and

(B) Any Class 3 modification that meets the criteria in paragraphs (3)(ii) (A) or (B) of this section; or that meets the criteria in paragraphs (3)(ii) (C) through (E) of this section and provides improved management or treatment of a hazardous waste already listed in the facility permit.

(ii) The temporary authorization request must include:

(A) A description of the activities to be conducted under the temporary authorization;

(B) An explanation of why the temporary authorization is necessary; and

(C) Sufficient information to ensure compliance with 40 CFR Part 264 standards.

(iii) The permittee must notify by mail all persons on the facility mailing list, maintained by the Director in accordance with 40 CFR 124.10(c)(viii), about the temporary authorization request. This notification must be made within 7 days of the authorization request.

(3) The Director shall approve or deny the temporary authorization as quickly as practical. To issue a temporary authorization, the Director must find:

(i) The authorized activities are in compliance with the standards of 40 CFR Part 264.

(ii) The temporary authorization is necessary to achieve one of the following objectives before action is

likely to be taken on a modification request.

(A) To facilitate timely implementation of closure or corrective action activities;

(B) To facilitate timely management of a newly regulated waste at the facility;

(C) To avoid disrupting ongoing waste management activities;

(D) To enable the permittee to respond to sudden changes in the types or quantities of the wastes being managed at the facility; or

(E) To facilitate other changes to protect human health and the environment.

(4)(i) Within 60 days of a temporary authorization, the permittee must submit a complete modification request. If the Director determines that the request is not complete, he or she shall terminate the temporary authorization.

(ii) The Director shall review and act on the complete modification request submitted under paragraph (4)(i) of this section according to the procedures for Class 2 and 3 modifications specified in paragraphs (a) and (b) of this section. However, the time period specified in paragraph (b)(6)(ii) of this section for Class 2 modifications would end on the date the temporary authorization (or the extended temporary authorization) expired, rather than 120 days after receipt of the modification request.

(iii) If the permittee wishes to continue the activities conducted under the temporary authorization after the expiration of the term of the initial authorization (which cannot exceed 180 days), the permittee must comply with the public notification procedures for Class 2 or 3 modifications, as appropriate (paragraph (b)(2) and (b)(3) or (c)(2) and (c)(3) of this section, as appropriate). In addition, the public shall be provided an opportunity to comment on the modification request, in accordance with paragraph (b)(4) or (c)(4) of this section.

(f) *Other modifications.* (1) In the case of modifications not explicitly listed in Appendix I of this section, the permittee may submit a Class 3 modification request to the Agency, or he or she may request a determination by the Director that the modification should be reviewed and approved as a Class 1 or Class 2 modification. If the permittee requests that the modification be classified as a Class 1 or Class 2 modification, he or she must provide the Agency with the necessary information to support the requested classification.

(2) The Director shall make the determination described in paragraph (f)(1) of this section as promptly as practicable. In determining the appropriate class for a specific modification, the Director shall consider the similarity of the modification to other modifications codified in Appendix I and the following criteria:

(i) Class 1 modifications apply to changes that correct typographical errors in the permit and keep the permit current with routine changes to the facility or its operation. These changes do not substantially alter the permit conditions or reduce the capacity of the facility to protect human health or the environment. In the case of Class 1 modifications, the Director may require prior approval.

(ii) Class 2 modifications apply to changes that are necessary to enable a permittee to respond, in a timely manner, to (A) common variations in the types and quantities of the wastes managed by the facility, (B) technological advancements, and (C) changes necessary to comply with new regulations, where these changes can be implemented without substantially changing design specifications or management practices in the permit.

(iii) Class 3 modifications substantially alter the facility or its operation.

(3) The Director shall notify persons on the facility mailing list in writing of any determination made under § 270.42(f). This notice must be mailed within 10 days of the determination. Any person may appeal the Director's determination, as specified in § 270.42(d).

(g) *Newly listed or identified wastes.* (1) The permittee is authorized to continue to manage wastes listed or identified as hazardous under 40 CFR Part 261 if he or she:

(i) Was managing the waste at the time the final rule listing or identifying the waste was published in the **Federal Register;**

(ii) Submits a Class 1 modification request at the time the waste becomes subject to the new requirements;

(iii) Is in compliance with the standards of 40 CFR Part 265 and, to the extent practicable, with those of 40 CFR Part 264; and

(iv) In the case of Class 2 and 3 modifications, submits a permit modification request within 180 days.

(2) New wastes or units added to a facility's permit under this subsection do not constitute expansions for the purpose of the 25 percent capacity expansion limit for Class 2 modifications.

(h) *Permit modification list.* The Director must maintain a list of all approved permit modifications and must publish a notice once a year in a State-wide newspaper that an updated list is available for review.

APPENDIX I TO § 270.42—CLASSIFICATION OF PERMIT MODIFICATIONS

Modifications	Class
A. General permit provisions:	
1. Administrative and informational changes	1
2. Correction of typographical errors	1
3. Equipment replacement or upgrading with functionally equivalent components (e.g., pipes, valves, pumps, conveyors, controls)	1
4. Changes in the frequency of or procedures for monitoring, reporting, or maintenance activities by the permittee:	
a. To provide for more frequent monitoring, reporting, or maintenance	1
b. Other changes	2
5. Schedule of compliance:	
a. Changes in interim compliance dates, with prior approval of the Director	[1] 1
b. Extension of final compliance date	3
6. Changes in expiration date of permit to allow earlier permit termination, with prior approval of the Director [2]	[1] 1
B. General facility standards:	
1. Changes to waste sampling or analysis methods:	
a. To conform with agency guidance or regulations	1
b. Other changes	2
2. Changes to analytical quality assurance/control plan:	
a. To conform with agency guidance or regulations	1
b. Other changes	2
3. Changes in procedures for maintaining the operating record	1
4. Changes in frequency or content of inspection schedules	2
5. Changes in the training plan:	
a. That affect the type and amount of training given to employees	2
b. Other changes	1
6. Contingency plan:	
a. Changes in emergency procedures (i.e., spill or release response procedures)	2
b. Replacement with functionally equivalent equipment, upgrade, or relocate emergency equipment listed	1
c. Removal of equipment from emergency equipment list	2
d. Changes in name, address, or phone number of coordinators or other persons or agencies identified in the plan	1
C. Ground-water protection:	
1. Changes in hazardous constituents for which the ground-water protection standard applies	3
2. Changes in concentration limit (including ACL)	3
3. Changes in point of compliance (e.g., due to inclusion of other units in waste management area)	2
4. Changes to wells:	
a. Changes in the number, location, or depth of upgradient or downgradient wells of permitted ground-water monitoring system	2
b. Replacement of an existing well that has been damaged or rendered inoperable, without change to location, design, or depth of the well	1
c. Replacement of existing wells resulting in a change to location, design, or depth of the well	2
5. Changes in ground-water sampling or analysis procedures or monitoring schedule	2
6. Changes in established background ground-water quality concentration levels	2
7. Changes in statistical procedure for determining whether a statistically significant change in ground-water quality between upgradient and downgradient wells has occurred	2
8. Changes in parameters or constituents that the permit requires to be monitored	2
9. Addition of a compliance monitoring program as required by § 264.98(h)(4) and § 264.99 or changes to a compliance monitoring program as required by § 264.99(k) [2]	2
10. Addition of a corrective action program as required by § 264.99(i)(2) and § 264.100 or changes to a corrective action program as required by § 264.100(h) [2]	3
11. Reduction in number of hazardous constituents analyzed for assessment program based on no evidence of wastes in the unit	2

APPENDIX I TO § 270.42—CLASSIFICATION OF PERMIT MODIFICATIONS—Continued

Modifications	Class
D. Closure:	
1. Changes to the closure plan:	
a. Changes in estimate of maximum extent of operations during the active life of the facility	2
b. Changes in estimate of maximum inventory of wastes on-site at any time during the active life of the facility	1
c. Changes in the closure schedule for any unit, changes in the final closure schedule for the facility, or extension of closure period	2
d. Changes in the expected year of final closure, where other permit conditions are not changed	1
e. Changes in procedures for decontamination of facility equipment or structures	2
f. Changes in the approved closure plan resulting from unexpected events occurring during partial or final closure	3
2. Creation of a new landfill unit as part of closure	3
3. Addition of the following new units to be used temporarily for closure activities:	
a. Surface impoundments	3
b. Incinerators	3
c. Waste piles that do not comply with § 264.250(c)	3
d. Waste piles that comply with § 264.250(c)	2
e. Tanks or containers (other than specified below)	2
f. Tanks used for neutralization, dewatering, phase separation, or component separation, with prior Director's approval	[1]
E. Post-closure plan:	
1. Changes in name, address, or phone number of contact in post-closure plan	1
2. Extension of post-closure care period	2
3. Reduction in the post-closure care period [2]	3
4. Changes to the expected year of final closure, where other permit conditions are not changed [2]	1
5. Events occurring during the active life of the facility, including partial and final closure, which necessitate changes to the approved post-closure plan [2]	2
F. Containers:	
1. Modification or addition of container units:	
a. Resulting in greater than 25% increase in the facility's container storage capacity	3
b. Resulting in up to 25% increase in the facility's container storage capacity	2
2. Modification of a container unit without increasing the capacity of the unit	2
3. Storage of new wastes in containers:	
a. That require additional or different management practices from those authorized in the permit	3
b. That do not require additional or different management practices from those authorized in the permit	2
4. Other changes in container management practices (e.g., aisle space; types of containers; segregation)	2
G. Tanks:	
1.:	
a. Modification or addition of tank units resulting in greater than 25% increase in the facility's tank capacity, except as provided in G(1)(c) below	3
b. Modification or addition of tank units resulting in up to 25% increase in the facility's tank capacity, except as provided in G(1)(d) below	2
c. Addition of a new tank that will operate for more than 90 days using any of the following physical or chemical treatment technologies neutralization, dewatering, phase separation, or component separation	2
d. After prior approval of the Director, addition of a new tank that will operate for up to 90 days using any of the following physical or chemical treatment technologies: neutralization, dewatering, phase separation, or component separation	[1]
2. Modification of a tank unit or secondary containment system without increasing the capacity of the unit	2
3. Replacement of a tank with a tank that meets the same design standards and has a capacity within +/−10% of the replaced tank provided:	1
—the capacity difference is no more than 1500 gallons,	
—the facility's permitted tank capacity is not increased, and	
—the replacement tank meets the same conditions in the permit.	
4. Modification of a tank management practice	2
5. Management of new wastes in tanks:	
a. That require additional or different management practices, tank design, different fire protection specifications, or significantly different tank treatment process from that authorized in the permit	2
b. That do not require additional or different management practices, tank design, different fire protection specifications, or significantly different tank treatment process than authorized in the permit	2
H. Surface impoundments:	
1. Modification or addition of surface impoundment units that result in increasing the facility's surface impoundment storage or treatment capacity	3
2. Replacement of a surface impoundment unit	3
3. Modification of a surface impoundment unit without increasing the facility's surface impoundment storage or treatment capacity or without adding or modifying the unit's liner or leak detection system	2
4. Modification of a surface impoundment management practice	2
5. Storage or treatment of new wastes in surface impoundments:	
a. That require additional or different management practices or different design of the liner or leak detection system than authorized in the permit	3
b. That do not require additional or different management practices or different design of the liner or leak detection system than authorized in the permit	2
I. Enclosed waste piles:	
For all waste piles except those complying with § 265.250(c), modifications are treated the same as for a landfill. The following modifications are applicable only to waste piles complying with § 265.250(c).	
1. Modification or addition of waste pile units:	
a. Resulting in greater than 25% increase in the facility's waste pile storage or treatment capacity	3
b. Resulting in up to 25% increase in the facility's waste pile storage or treatment capacity	2
2. Modification of a waste pile unit without increasing the capacity of the unit	2
3. Replacement of a waste pile unit with another waste pile unit of the same design and capacity and meeting all waste pile conditions in the permit	1
4. Modification of a waste pile management practice	2
5. Storage or treatment of new wastes in waste piles:	
a. That require additional or different management practices or different design of the unit	3
b. That do not require additional or different management practices or different design of the unit	2
J. Landfills and unenclosed waste piles:	
1. Modification or addition of landfill units that result in increasing the facility's disposal capacity	3
2. Replacement of a landfill	3
3. Addition or modification of a liner, leachate collection system, leachate detection system, run-off control, or final cover system	3
4. Modification of a landfill unit without changing a liner, leachate collection system, leachate detection system, run-off control, or final cover system	2
5. Modification of a landfill management practice	2
6. Landfill new wastes:	
a. That require additional or different management practices, different design of the liner, leachate collection system, or leachate detection system	3
b. That do not require additional or different management practices, different design of the liner leachate collection system, or leachate detection system	2
K. Land treatment:	
1. Lateral expansion of or otherwise modification of a land treatment unit to increase areal extent	3
2. Modification of run-on control system	2
3. Modify run-off control system	3
4. Other modifications of land treatment unit component specifications or standards required in permit	2
5. Management of new wastes in land treatment units:	
a. That require a change in permit operating conditions or unit design specifications	3
b. That do not require a change in permit operating conditions or unit design specifications	2
6. Modification of a land treatment unit management practice to change rate or method of waste application	3
7. Modification of a land treatment unit management practice to change measures of pH or moisture content, or to enhance microbial or chemical reactions	2
8. Modification of a land treatment unit management practice to grow food chain crops, to add to or replace existing permitted crops with different food chain crops, or to modify operating plans for distribution of animal feeds resulting from such crops	3
9. Modification of operating practice due to detection of releases from the land treatment unit pursuant to § 264.278(g)(2)	3
10. Changes in the unsaturated zone monitoring system, resulting in a change to the location, depth, number of sampling points, or replacement of unsaturated zone monitoring devices or components of devices with devices or components that have specifications different from permit requirements	3
11. Changes in the unsaturated zone monitoring system that do not result in a change to the location, depth, number of sampling points, or that replaces unsaturated zone monitoring devices or components of devices with devices or components having specifications different from permit requirements	2
12. Changes in background values for hazardous constituents in soil and soil-pore liquid	3
13. Changes in sampling, analysis, or statistical procedure	2
14. Changes in land treatment demonstration program prior to or during the demonstration	2
15. Changes in any conditions specified in the permit for a land treatment unit to reflect results of the land treatment demonstration, provided performance standards are met	2
16. Changes to allow a second land treatment demonstration to be conducted when the results of the first demonstration have not shown the conditions under which the wastes can be treated completely, provided the conditions for the second demonstration are substantially the same as the conditions for the first demonstration and have received the prior approval of the Director	[1]
17. Changes to allow a second land treatment demonstration to be conducted when the results of the first demonstration have not shown the conditions under which the wastes can be treated completely, where the conditions for the second demonstration are not substantially the same as the conditions for the first demonstration	3
18. Changes in vegetative cover requirements for closure	2
L. Incinerators:	
1. Modification of an incinerator unit:	
a. To increase by more than 25% any of the following limits authorized in the permit a thermal feed rate limit, a waste feed rate limit, or an organic chlorine feed rate limit. The Director will require a new trial burn to substantiate compliance with the regulatory performance standards unless this demonstration can be made through other means	3

APPENDIX I TO § 270.42—CLASSIFICATION OF PERMIT MODIFICATIONS—Continued

Modifications	Class
b. To increase by up to 25% any of the following limits authorized in the permit: a thermal feed rate limit, a waste feed limit, or an organic chlorine feed rate limit. The Director will require a new trial burn to substantiate compliance with the regulatory performance standards unless this demonstration can be made through other means	2
c. By changing the internal size or geometry of the primary or secondary combustion units, by adding a primary or secondary combustion unit, by substantially changing the design of any component used to remove HC1 or particulate from the combustion gases, or by changing other features of the incinerator that could affect its capability to meet the regulatory performance standards. The Director will require a new trial burn to substantiate compliance with the regulatory performance standards unless this demonstration can be made through other means	3
2. Modification of an incinerator unit in a manner that would not likely affect the capability of the unit to meet the regulatory performance standards but which would change the operating conditions or monitoring requirements specified in the permit. The Director may require a new trial burn to demonstrate compliance with the regulatory performance standards	2
3. Replacement of unit components with functionally equivalent components that would not affect its capability to meet the regulatory performance standards or the operating conditions or monitoring requirements specified in the permit	1
4. Operating requirements:	
a. Modification of the limits specified in the permit for minimum combustion gas temperature, minimum combustion gas residence time, or oxygen concentration in the secondary combustion chamber. The Director will require a new trial burn to substantiate compliance with the regulatory performance standards unless this demonstration can be made through other means	3
b. Modification of any stack gas emission limits specified in the permit, or modification of any conditions in the permit concerning emergency shutdown or automatic waste feed cutoff procedures or controls	3

APPENDIX I TO § 270.42—CLASSIFICATION OF PERMIT MODIFICATIONS—Continued

Modifications	Class
c. Modification of any other operating condition or any inspection or recordkeeping requirement specified in the permit. The Director may require a new trial burn to demonstrate compliance with the regulatory performance standards, particularly if thermal feed rates, waste feed rates or organic chlorine feed rates are to be substantially changed	2
5. Incineration of new wastes:	
a. If the waste contains a POHC that is more difficult to incinerate than authorized by the permit or if incineration of the waste requires compliance with different regulatory performance standards than specified in the permit. The Director will require a new trial burn to substantiate compliance with the regulatory performance standards unless this demonstration can be made through other means	3
b. If the waste does not contain a POHC that is more difficult to incinerate than authorized by the permit and if incineration of the waste does not require compliance with different regulatory performance standards than specified in the permit	2
6. Shakedown and trial burn period:	
a. Modification of the trial burn plan or any of the permit conditions applicable during the shakedown period for determining operational readiness after construction, the trial burn period, or the period immediately following the trial burn	2
b. Authorization of up to an additional 720 hours of waste incineration during the shakedown period for determining operational readiness after construction, with the prior approval of the Director	[1] 1
c. Changes in the operating requirements set in the permit for conducting a trial burn, provided the change is minor and has received the prior approval of the Director	[1] 1
d. Changes in the ranges of the operating requirements set in the permit to reflect the results of the trial burn, provided the change is minor and has received the prior approval of the Director	[1] 1
7. Substitution of an alternate type of fuel that is not specified in the permit [2]	1

[1] Class 1 modifications requiring prior Agency approval.
[2] Permit modifications not addressed or agreed upon by the Regulatory Negotiating Committee.

14. In § 270.62, the last sentence of paragraph (a) introductory text and the last sentence of paragraph (b)(10) are revised to read as follows:

§ 270.62 Hazardous waste incinerator permits.

(a) * * *

The permit may be modified to reflect the extension according to § 270.42 of this chapter.

* * * * *

(b) * * *

(10) * * *

The permit modification shall proceed according to § 270.42.

* * * * *

15. In § 270.63, paragraph (d)(3) is removed and paragraphs (d)(1) and (d)(2) are revised to read as follows:

§ 270.63 Permits for land treatment demonstrations using field test or laboratory analyses.

* * * * *

(d) * * *

(1) This permit modification may proceed under § 270.42, or otherwise will proceed as a modification under § 270.41(a)(2). If such modifications are necessary, the second phase of the permit will become effective only after those modifications have been made.

(2) If no modifications of the second phase of the permit are necessary, the Director will give notice of his final decision to the permit applicant and to each person who submitted written comments on the phased permit or who requested notice of the final decision on the second phase of the permit. The second phase of the permit then will become effective as specified in § 124.15(b).

[FR Doc. 87-21726 Filed 9-22-87; 8:45 am]
BILLING CODE 6560-50-M

federal register

Wednesday
September 23, 1987

Part III

Department of Labor

Pension and Welfare Benefits Administration

29 CFR Part 2582

Bonding Under the Federal Employees' Retirement System Act of 1986; Interim Rule With Request for Comments

DEPARTMENT OF LABOR

Pension and Welfare Benefits Administration

29 CFR Part 2582

Bonding Under the Federal Employees' Retirement System Act of 1986

AGENCY: Pension and Welfare Benefits Administration, Labor.

ACTION: Interim rule with request for comments.

SUMMARY: This interim rule applies the temporary bonding regulations under the Employee Retirement Income Security Act of 1974 (ERISA) to the Thrift Savings Fund (Fund) which has been established pursuant to the provisions of the Federal Employees' Retirement System Act of 1986 (FERSA). This interim rule also prescribes the amount of bonds required under FERSA for fiduciaries and persons who handle funds or other property of the Fund.

This interim rule is being issued because the Secretary of Labor (Secretary) is required by FERSA to prescribe regulations necessary to carry out the bonding requirements of FERSA. This interim rule is also being issued because the Secretary is required by FERSA to prescribe the amount of a required bond at the beginning of each fiscal year of the Fund. The rule will help to ensure that each fiduciary and each person who handles funds or other property of the Fund will be properly bonded.

DATES: This interim rule will be effective as of April 1, 1987. Written comments concerning this interim rule must be received by the Department of Labor (the Department) on or before November 23, 1987.

ADDRESSES: Interested persons are invited to submit written comments concerning this interim rule to: Pension and Welfare Benefits Administration, Room N-5669, U.S. Department of Labor, 200 Constitution Ave., NW., Washington, DC 20210. Attention: Interim FERSA Rule on Bonding. All submissions will be open to public inspection at the Public Documents Room, Pension and Welfare Benefits Administration, U.S. Department of Labor, Room N-5507, 200 Constitution Ave., NW., Washington, DC 20210.

FOR FURTHER INFORMATION CONTACT: Alan H. Levitas, Office of Regulations and Interpretations, (202) 523-8194 (FTS 523-8194).

SUPPLEMENTARY INFORMATION

Background Information

Enacted on June 6, 1986, and amended by the Federal Employees' Retirement System Technical Corrections Act of 1986 (FERSTCA, Pub. L. 99-556) and the Omnibus Budget Reconciliation Act of 1986 (Pub. L. 99-509), the Federal Employees' Retirement System Act of 1986 (Pub. L. 99-335, 100 Stat. 515, 5 U.S.C. 8401 *et seq.*) established a new program of retirement and other benefits for most federal civilian employees hired after December 31, 1983, as well as certain other federal employees. FERSA provides a tax-deferred savings plan ("Thrift Savings Plan") as an option for federal employees, whose contributions may be matched in part by contributions made by employing agencies of the United States Government. The Thrift Savings Plan became operational on April 1, 1987. When the Thrift Savings Plan is fully implemented, contributions will be invested in one or more of three separate investment funds which together comprise the Thrift Savings Fund.

In general, the fiduciary responsibility, prohibited transaction, bonding and related rules applicable to the management of the Fund under FERSA are derived from similar rules applicable to private employee benefit plans under ERISA.

The bonding requirements applicable to the Fund are set forth in section 8478 of FERSA, which closely parallels section 412 of ERISA. Section 8478(a) of FERSA requires, with certain exceptions, that each fiduciary and each person who handles funds or other property of the Fund shall be bonded as provided in section 8478 against loss by reason of acts of fraud or dishonesty. In this connection, section 8478(b)(1) provides that the Secretary shall prescribe the amount of a bond required under section 8478 at the beginning of each fiscal year. Section 8478(b)(1) further provides that the amount of bond shall not be less than 10 percent of the amount of funds handled, but in no case less than $1,000 nor more than $500,000 except that the Secretary, after due notice and opportunity for a hearing to all interested parties, may prescribe a bond in excess of $500,000. Under section 8478(b)(2), in prescribing the amount of a bond for purposes of section 8478(b)(1), the amount of funds handled must be determined by reference to the amount of funds handled during the preceding fiscal year by the person, group or class to be covered by the bond (or by their predecessor of predecessors, if any), or to the amount of funds handled during the current fiscal year, estimated as provided in regulations prescribed by the Secretary.

Pursuant to section 8478(c), a bond obtained with respect to the Fund must also include the terms and conditions required by the Secretary and must have as surety thereon a corporate surety company approved for Federal bonds. Any such bond, whether covering an individual or a group or class, must be in a form or of a type approved by the Secretary.

Section 8478(d) makes it unlawful for any person to whom FERSA's bonding requirements apply to handle, disburse, or otherwise exercise custody or control over Fund property without being bonded as required by section 8478. It is also unlawful under section 8478(d) for any fiduciary, or any other person having authority to direct the peformance of functions involving the handling of Fund property, to permit any such function to be performed by any person to whom FERSA's bonding requirements apply if the requirements of section 8478 are not met.

Section 8478(f) provides that the Secretary shall prescribe such regulations as may be necessary to carry out the provisions of section 8478, including regulations exempting a person or a class of persons from FERSA's bonding requirements. Section 113 of FERSTCA authorizes the Secretary of Labor to apply with respect to the Fund, through December 31, 1989, the temporary bonding regulations under section 412 of ERISA that are set forth in § 2550.412-1 and Part 2580 or Subchapter I of Chapter XXV of Title 29 of the Code of Federal Regulations (CFR).

ERISA section 412 requires generally that plan officials who handle funds or other property of private employee benefit plans be bonded. On January 10, 1975, the Department published a temporary bonding regulation under ERISA section 412 (29 CFR 2655.1, redesignated as 29 CFR 2550.412-1 on May 12, 1975, at 40 FR 20654). Temporary regulation 29 CFR 2550.412-1 references selected portions of the bonding regulations originally issued under the authority of section 13 of the Welfare and Pension Plans Disclosure Act (WPPDA), which was repealed on January 1, 1975, and makes them applicable to plan officials under ERISA.

On June 28, 1985 the Department published a notice of final rulemaking in the **Federal Register** (50 FR 26704) which recodified the ERISA temporary bonding regulations in Part 2580 of Subchapter I of Chapter XXV of CFR Title 29, and which amended temporary ERISA regulation 29 CFR 2550.412-1 to make

clear that the WPPDA bonding regulations referenced therein are now located in Part 2580 of CFR Title 29.

Discussion of the Interim Rule

On April 13, 1987, the Secretary delegated to the Assistant Secretary for Pension and Welfare Benefits the authority to administer section 8478 of FERSA (Secretary's Order 1-87, 52 FR 13139, April 21, 1987). Accordingly, and under the authority of section 113 of FERSTCA, this interim rule applies the temporary bonding regulations under section 412 of ERISA to the bonding provisions of FERSA, pending the issuance of permanent regulations under section 8478, but no later than December 31, 1989. Consistent with that authority, the Department intends, in construing section 8478, to adhere to the principles contained in the ERISA temporary bonding regulations included in Part 2580 of CFR Title 29. In this connection, the interim rule explains that, for purposes of FERSA section 8478 and the temporary bonding rules applicable thereto, any reference to section 13 of the WPPDA in the ERISA temporary bonding regulations shall be deemed to refer to section 8478 of FERSA. The interim rule also explains that, where the particular phrases set forth in FERSA are not identical to the phrases in the WPPDA, ERISA or the ERISA temporary bonding regulations, the phrases appearing in FERSA shall be substituted therefor. The interim rule further explains that where the phases are identical but the meaning is different, the meaning given such phrases by FERSA shall govern.

This interim rule also prescribes the amount of a bond required under section 8478(a) of FERSA for each fiscal year of the Fund. The rule specifies that, for each fiscal year of the Fund, the amount of any such bond shall be not less than 10 percent of the amount of funds handled and that in no case shall a bond be less than $1,000 nor more than $500,000, except that the Secretary, after due notice and opportunity for hearing to all interested parties, and other consideration of the record, may prescribe an amount in excess of $500,000.

Reference should be made to the temporary bonding regulations contained in Subpart C ("Amount of the Bond") of Part 2580 of CFR Title 29, being applied to FERSA by this interim rule, for further guidance with respect to matters relating to the amount of a bond. Such matters include, but are not limited to: The use of deductibles (§ 2580.412-11); the meaning of "funds" in determining the amount of the bond (§ 2580.412-13); determinations of the amount of funds handled during the preceding fiscal year of the Fund (§ 2580.412-14); and estimating the amount of funds to be handled during the current fiscal year in a case where there is no prior fiscal year (§ 2580.412-15).

It should be noted that, pursuant to this interim rule, the Secretary will not conduct a new rulemaking at the beginning of each fiscal year of the Fund, in order to prescribe the amount of a bond under section 8478. Instead, the interim rule contained herein automatically establishes the amount of a bond with respect to the 1987 fiscal year of the Fund, as well as for all successive fiscal years, unless the Secretary prescribes a maximum amount for such a bond in excess of $500,000, subject to the procedural requirements for notice and comment contained in section 8478(b)(1) of FERSA and the Administrative Procedure Act (APA, 5 U.S.C. *et seq.*).

Publication as an Interim Rule and Opportunity for Comment

The Department is publishing this document as an interim rule, with a request for comments, rather than as a proposed rule, as generally required by the APA, because it has determined that "good cause" exists within the meaning of section 553(b)(3)(B) of the APA for finding that a notice and comment period prior to the effective date of the rule would be impracticable, unnecessary and contrary to the public interest. Since the Thrift Savings Plan became operational on April 1, 1987, any delay in the effective date of this rule would deprive the Federal Retirement Thrift Investment Board ("Board"), which is responsible for the management and operation of the Fund, of the guidance which is necessary to implement effectively the bonding provisions of section 8478 of FERSA. Such guidance must be provided without delay, because section 8478(d) makes it unlawful for any person to whom FERSA's bonding requirements apply to handle Fund property without being properly bonded, and because it is also unlawful under section 8478(d) for any fiduciary with respect to the Fund to permit any person under his or her direction to handle Fund property without being properly bonded.

Under section 8478(b)(1) of FERSA, the Secretary is required to provide notice and an opportunity for a hearing to all interested parties only when he intends to prescribe an amount of a bond in excess of $500,000, in contrast to cases such as the present rulemaking, where he is prescribing an amount of a bond of $500,000 or less. Moreover, the Department notes that the amount of a bond prescribed under FERSA by this rulemaking will be consistent with the amount of bonds presently prescribed with respect to very large private employee benefit plans pursuant to section 412 of ERISA.

Although this interim rule will be effective as of April 1, 1987, all interested persons are invited to submit written comments on the subject matter of this notice to the address and within the time period set forth above. All comments will be considered by the Department and made available for public inspection as part of the record of the proceeding referred to herein. The Department may make modifications to the interim rule on the basis of the public comments received.

Effective Date

This document will become effective as of April 1, 1987. The undersigned has determined that good cause exists for waiving the customary requirement for delay in the effective date of a final rule for 30 days following its publication. This determination is based upon a finding by the Department that any delay in the effective date of this rule would deprive the Board of the guidance which is necessary to implement effectively the bonding provisions of section 8478 of FERSA when the Thrift Savings Plan becomes operational on April 1, 1987.

Regulatory Flexibility Act

The Regulatory Flexibility Act (RFA, Pub. L. 96-354, 5 U.S.C. 601-612) requires that an agency prepare and make available for public comment in initial regulatory flexibility analysis whenever it publishes a general notice of proposed rulemaking. The purpose of the analysis is to describe the impact of the rule on "small entities," as defined in 5 U.S.C. 601(6). That definition incorporates the terms "small business" and "small organization," as defined in the RFA. However, in order to avoid unnecessary analyses, the RFA also provides that an analysis is not required if the head of the agency certifies that a rule will not, if adopted, have a significant economic impact on a substantial number of small entities. See 5 U.S.C. 605.

The term "small entity," as applied to "small businesses" and "small organizations" is defined in the RFA to mean, unless an agency establishes otherwise, a business or not-for-profit enterprise which is independently owned and operated and which is not dominant in its field. That definition will apply to this certification, because the Department has not yet established an

alternative definition and because the Department believes that whatever alternative definition it ultimately may develop for purposes of administering the fiduciary responsibility provisions of FERSA (if it should choose to establish an alternative definition) would not affect the certification.

To the extent that this interim rule can be considered a general notice of proposed rulemaking for purposes of the RFA, it is hereby certified, under the authority granted in 5 U.S.C. 605 and for the reasons set forth below, that the interim rule contained in this notice will not have a significant economic impact on a substantial number of small entities. Therefore, no regulatory flexibility analysis is required in connection with this interim rule.

The reasons for the certification are as follows. This interim rule applies only to a single employee benefit plan which limits participation to employees of U.S. Government agencies. To the extent that bonding against loss by reason of acts of fraud or dishonesty are required pursuant to section 8478 of FERSA for fiduciaries with respect to the Fund or persons handling funds or other property of the Fund, very few, if any, "small entities," as defined in 5 U.S.C. 601(6), will be affected by this interim rule. This is because the Thrift Savings Plan is sponsored by the U.S. Government, and because FERSA's bonding requirements are likely to affect primarily federal employees and an insubstantial number of financial institutions which may provide various services in connection with the Fund.

Paperwork Reduction Act

This final rule is not subject to section 3504(h) of the Paperwork Reduction Act (44 U.S.C. 3501) since it does not contain any new information collection requirement.

Executive Order 12291

The Department has determined that this rule is not a "major rule" as that term is used in Executive Order 12291 because the rule will not result in: An annual effect on the economy of $100 million; a major increase in costs or prices for consumers, individual industries, government agencies, or geographic regions; or significant adverse effects on competition, employment, investment, productivity, innovation, or on the ability of United States-based enterprises to compete with foreign-based enterprises in domestic or export markets.

Statutory Authority

This regulation is adopted pursuant to the authority contained in section 8478 of FERSA (Pub. L. 99-335; 100 Stat. 515; 5 U.S.C. 8478) and section 113 of FERSTCA (Pub. L. 99-556).

List of Subjects in 29 CFR Part 2582

Employee benefit plan, Federal Employees' Retirement System Act, Pension plan, Surety bonds.

Adoption of Amendment of Regulations

For the reasons set forth above, Chapter XXV of Title 29 of the Code of Federal Regulations is amended as set forth below:

1. A new Subchapter J, consisting of Part 2582, is added to read as follows:

SUBCHAPTER J—FIDUCIARY RESPONSIBILITY UNDER THE FEDERAL EMPLOYEES' RETIREMENT SYSTEM ACT OF 1986

PART 2582—RULES AND REGULATIONS FOR FIDUCIARY RESPONSIBILITY

Subpart A—Temporary Bonding Rules

Sec.
2582.8478-1 Temporary bonding requirements.
2582.8478-2 Amount of the bond.

Authority: Sec. 101, Pub. L. 99-335, 100 Stat. 515 (5 U.S.C. 8478); Sec. 113, Pub. L. 99-556; Secretary's Order 1-87, 52 FR 13139, April 21, 1987.

Subpart A—Temporary Bonding Rules

§ 2582.8478-1 Temporary bonding requirements.

(a) *General.* Pending the issuance of permanent regulations under section 8478 of the Federal Employees' Retirement System Act of 1986 (FERSA), any fiduciary with respect to the Thrift Savings Fund (Fund) established under FERSA or any person who handles funds or other property of the Fund, shall be deemed to be in compliance with the bonding requirements of section 8478 of FERSA if he or she is bonded in compliance with the temporary bonding regulations under section 412 of the Employee Retirement Income Security Act of 1974 (ERISA) set forth in Part 2580 of Title 29 of the Code of Federal Regulations.

(b) *Application of ERISA temporary bonding rules.* For purposes of this section, (1) any reference to section 13 of the Welfare and Pension Plans Disclosure Act, as amended (WPPDA), or any section thereof in the ERISA temporary bonding regulations shall be deemed to refer to section 8478 of FERSA or the corresponding subsection thereof; (2) where the particular phrases set forth in FERSA are not identical to the phrases in the WPPDA, ERISA or the ERISA temporary bonding regulations, the phrases appearing in FERSA shall be substituted by operation of law; and (3) where the phrases are identical but the meaning is different, the meaning given such phrases by FERSA shall govern. For example, the phrase "every administrator, officer and employee of any employee welfare benefit plan or of any employee pension benefit plan subject to this Act who handles funds or other property of such plan" which appears in the WPPDA and in the ERISA temporary bonding regulations shall be construed to mean, for purposes of this section, "each fiduciary and each person who handles funds or property of the Thrift Savings Fund," which is the term appearing in section 8478 of FERSA; the terms "employee benefit plan" and "plan" which appear in the ERISA temporary bonding regulations shall be construed to mean, for purposes of this section, "Thrift Savings Fund"; and the term "reporting year of the plan" which appears in the ERISA temporary bonding regulations shall be construed to mean, for purposes of this section, "fiscal year of the Thrift Savings Fund."

(c) *Effectiveness.* This section is effective until the earlier of the date of issuance by the Secretary of Labor of permanent regulations under section 8478 of FERSA or December 31, 1989.

§ 2582.8478-2 Amount of the bond.

(a) *General.* Under the authority of section 8478(b)(1) of the Federal Employees' Retirement System Act of 1986 (FERSA), the amount of a bond for each person, group or class to be bonded shall not be less than 10 percent of the amount of funds handled by such person, group or class with respect to any fiscal year of the Fund. In no case shall such bond be less than $1,000 nor more than $500,000. However, the Secretary of Labor reserves the authority under section 8478(b)(1) of FERSA to prescribe an amount in excess of $500,000, after due notice and opportunity for hearing to all interested parties, and other consideration of the record.

(b) *Effectiveness.* This section shall remain in effect until it is amended or withdrawn in accordance with section 8478(b)(1) of FERSA.

Dated: September 17, 1987.

David M. Walker,

Deputy Assistant Secretary for Pension and Welfare Benefits.

[FR Doc. 87-21873 Filed 9-22-87; 8:45 am]

BILLING CODE 4510-29-M

federal register

Wednesday
September 23, 1987

Part IV

Department of Education

Pell Grant Program; Notice

DEPARTMENT OF EDUCATION

Pell Grant Program

AGENCY: Department of Education.

ACTION: Publication of the 1987–88 Award Year Zero Student Aid Index (SAI) Charts.

SUMMARY: The Secretary publishes the Zero Student Aid Index (SAI) Charts for institutions to use when verifying application information under the Pell Grant Program. The use of the Zero SAI Charts is authorized by § 668.59(a)(2) of the Student Assistance General Provisions regulations, 34 CFR 668.59(a)(2).

SUPPLEMENTARY INFORMATION: The Pell Grant Program provides grant assistance to financially needy students to help them meet their cost of postsecondary education. In order to receive a Pell Grant, a student must submit an application to the Secretary which contains financial and other information that permits the Secretary to determine the student's expected family contribution, i.e., an amount that the student and his or her family may be reasonably expected to contribute toward the student's education. The expected family contribution is called the Student Aid Index or SAI in the Pell Grant Program.

The Secretary notifies the student of his or her SAI on a document called a Student Aid Report (SAR). On the SAR, the Secretary includes financial and other information reported by the applicant on the application. The Secretary uses some of this information to calculate the student's SAI.

In order to assure that applicants for Pell Grants provide accurate information on their applications, the Secretary requires these applicants to verify and update that information and has published regulations governing this verification process in Subpart E of the Student Assistance General Provisions regulations, 34 CFR Part 668, Subpart E. Generally, under these procedures, if an applicant is required to change any of his or her application information, the applicant must make the change on the SAR that he or she received and must resubmit that changed SAR to the Secretary. However, there are certain situtations where the changed application information would not change the student's SAI, and, in those situations, the Secretary does not require the applicant to resubmit his or her application.

Under § 668.59(a)(2) of the Student Assistance General Provisions regulations, 34 CFR 668.59(a)(2), the Secretary does not require an applicant to resubmit his or her changed SAR to the Secretary if the applicant has a zero SAI and the institution that the applicant is attending can determine that the applicant's SAI remains at zero using the verified information and the Zero SAI Charts.

The Zero SAI Charts are a simplified version of the formula the Secretary uses in calculating an applicant's SAI. The charts may be used only under certain conditions:

- The applicant's dependency status remains unchanged after verification, and
- The applicant's own income and assets and the parental income and assets of the dependent student do not exceed specified amounts.

Use the following criteria to determine whether to use the Zero SAI Charts to calculate the applicant's SAI:

For Dependent Students

1. Income of a single dependent student of less than $3,501;
2. Income of a married dependent student of less than $5,201;
3. No dependent student and spouse savings or net assets;
4. Net home asset of parents of less than $25,001;
5. Net farm and business assets of parents of less than $50,001; and
6. Net parental assets, other than home and farm and business assets, of less than $25,001.

For Independent Students With Dependents

1. Net home assets of less than $25,001;
2. Net farm and business assets of less than $50,001; and
3. Net value of assets, other than home and farm and business assets, of less than $25,001.

For Independent Students Without Dependents

No savings or net assets.

Zero SAI—Chart A

Applicant Is Eligible for Full Employment Expense Offset

An applicant's SAI is zero if—	
The corrected Household size is—	And the verified effective family income (EFI) [1] is less than—
1	
2	8,001
3	9,501
4	11,601
5	13,601
6	15,101
7	16,801
8	18,501
9	20,201
10	21,901
11	23,601
12	25,301
13	27,001

[1] EFI equals the annual adjusted family income (AGI + untaxed income + ½ of student's VA educational benefits) of the parents for a dependent student, or of the student and spouse for an independent student, minus any Federal income tax paid on that income.

Zero SAI—Chart B

Applicant Is Not Eligible for Full Employment Expense Offset

An applicant's SAI is zero if—	
The correct household size is—	And the verified effective family income (EFI) [1] is less than—
1	5,201
2	6,501
3	8,001
4	10,101
5	12,101
6	13,601
7	15,301
8	17,001
9	18,701
10	20,401
11	22,101
12	23,801
13	25,501

[1] EFI equals the annual adjusted family income (AGI + untaxed income + ½ of student's VA educational benefits) of the parents for a dependent student, or of the student and spouse for an independent student, minus any Federal income tax paid on that income.

FOR FURTHER INFORMATION CONTACT: Donald Conner, Program Analyst, Verification Development Section, Student Verification Branch, Division of Policy and Program Development, Office of Student Financial Assistance, Office of Postsecondary Education, 400 Maryland Avenue SW., ROB-3, Room 4613, Washington, DC 20202, Telephone: (202) 472-6200.

(20 U.S.C. 1094)

(Catalog of Federal Domestic Assistance No. 84.063 Pell Grant Program)

Dated: September 16, 1987.

C. Ronald Kimberling,

Assistant Secretary for Postsecondary Education.

[FR Doc. 87-21893 Filed 9-22-87; 8:45 am]

BILLING CODE 4000-01

federal register

Wednesday
September 23, 1987

Part V

Department of Defense

Corps of Engineers, Department of the Army

33 CFR Part 241

Flood Control Cost-Sharing Requirements Under the Ability To Pay Provision; Interim Final Rule

DEPARTMENT OF DEFENSE

Corps of Engineers, Department of the Army

33 CFR Part 241

Flood Control Cost-Sharing Requirements Under the Ability To Pay Provision

AGENCY: U.S. Army Corps of Engineers, DoD.

ACTION: Interim final rule.

SUMMARY: This document presents an interim final rule partially implementing section 103(m) of Pub. L. 99-662, which directs the Secretary of the Army to reduce the non-Federal cost-share of flood control and agricultural water supply projects under an "ability to pay" determination. This interim final rule applies only to flood control projects. Agricultural water supply projects will be covered by other guidelines which will be published in the future.

This document was published in the **Federal Register** on September 16, 1987, as a proposed rule. In order to begin to apply the rule immediately, we are republishing it as an interim final rule. The comment period has been extended to reflect the republication. The rule itself has not changed. Minor editorial changes have been made in the Supplementary Information so that the rule's status as interim final is clearly indicated.

The ability to pay calculation is a two step procedure. In step one, an alternative level of cost-sharing is determined by comparing project flood control benefits to project flood control costs. It is assumed that even the poorest communities and states should have the ability to afford a cost-share equal to one fourth of the benefit/cost ratio, when expressed as a percentage. If this calculation yields an alternative non-Federal cost-share that exceeds the normal share (as defined in section 103), the Non-Federal interest will be required to provide the normal share.

If the benefits-based share alternative is less than the normal share, the project sponsor may be eligible to contribute the amount required by the lower share, or to provide a share that is between the two values. Eligibility will be determined by a formula that uses per capita personal income of the state(s) and county(ies) in which the project is located. If the state and county per capita income values are low enough, the project will be eligible for the full reduction. Intermediate values of state and county per capita income yield a partial reduction from the normal cost-share to the benefits-based alternative. High values of state and county income result in no reduction from the normal share.

The interim final rule also covers other subjects which are relevant to the ability to pay test. These details are discussed in the supplementary information that follows:

DATE: This interim final rule is effective as of September 23, 1987. Before adopting the interim final rule as a final rule, the Corps of Engineers will give consideration to any written comments timely submitted. Written comments must be received by December 22, 1987.

ADDRESS: Send comments to HQUSACE, Director of Civil Works, ATTN: CECW-RP, Washington, DC 20314-1000.

FOR FURTHER INFORMATION CONTACT: Dr. Robert N. Stearns, (202) 272-0120.

SUPPLEMENTARY INFORMATION:

Background

The language of section 103(m) is broad: "Any cost-sharing agreement under this section for flood control or agricultural water supply shall be subject to the ability of a non-Federal interest to pay. The ability of any non-Federal interest to pay shall be determined by the Secretary in accordance with procedures established by the Secretary." There is no definite Congressional direction on how the Secretary is to proceed.

The Report of the Senate Committee on Environment and Public Works (Senate Report 99-126, Aug. 1, 1985) briefly discusses section 103(m). The first reference (p. 6) gives examples of the kinds of factors which should be included in the ability to pay criteria; income in relation to need, unemployment, and the sponsor's ability to borrow funds. The second reference (p. 69) stresses that beneficial projects should not be rejected simply because non-Federal interests lack the necessary resources, but points out that since the normal cost-sharing provisions under section 103 should not prove burdensome, ability to pay determinations reducing the non-Federal share are quite unlikely.

The debate over section 103(m) provides some insight as to Congressional intent. Senator Moynihan, on March 4, 1986 stated that floods could hit and devastate communities "which are small and could not possibly themselves take care of the cost sharing that is provided under the basic schedule." (pp. S2838-S2839) Senator Pryor on March 26, 1986, expressed his concern that "in the rural areas, there are fewer benefited parties to make up the local sponsor group, and the amount they would have to tax themselves to pay 25 to 35 percent of construction costs are onerous." (p. S3401) The debate also shows that there is no clear consensus on precisely how the section is to operate. Congressman Roe, in describing the conference agreement on Oct. 17, 1986, expressed his view that the Secretary should be encouraged "to use this discretionary authority to continue to provide new flood control protection at reduced or no non-Federal cost-sharing in areas where need exists but ability to pay does not." (p. H11546) On the other hand Senator Stafford, Chairman of the Senate Committee on Environment and Public Works argued that, "It is anticipated that the Secretary will only rarely invoke this authority. And this provision can never be used to eliminate the non-Federal share." (p. S16983) Senator Stafford also argued, "This bill now says local communities must, in general pay 25 cents to get at least $1 in benefits, sometimes much more than $1 in benefits. Even the poorest communities should be able to find a quarter to invest in order to get $1 or more in return." (p. S16983).

The Role of the Local Sponsor

In developing the ability to pay guidelines, we have had to address the issue that different states have different policies with respect to the degree of state involvement in sponsoring flood control projects and providing financial support. We believe that the guidelines should be "policy neutral" in relation to the selection of the local sponsor. Thus, states where sponsors are agencies of state governments will not be treated differently than states where sponsors may be much smaller governmental units such as cities or towns.

While our goal is to be policy neutral with respect to the selection of the local sponsor, we will not be neutral with respect to the possibility of state assistance when local sponsors have limited financial capability. We believe that states have a responsibility in cases where a local sponsor seems incapable of providing the non-Federal share. This has led to two conclusions which have been incorporated into our guidelines.

Our first conclusion is that state resources as well as project area resources should be a factor in determining any adjustments to the normal cost-share. This will be evident in the formulas described below.

Our second conclusion is that project size should not be a separate consideration. Larger projects must generate larger benefits, and therefore

affect a larger segment of the population, if they have met the economic feasibility test for Federal funding. More importantly, when compared to state budgets, every project becomes a small percentage of total capital expenditures.

The Use of Project Benefits in Developing a Cost-Share Alternative

Local sponsors and their states have two sources of economic resources that can be used to pay for the non-Federal share of the project. First, existing resources as reflected in traditional measures of income and/or wealth, may be sufficient. Second the project itself will generate benefits. Many of the benefits to flood control projects are either due to flood damage reduction or to income enhancement to households and businesses located in the project area. These benefits represent an important source of income and wealth that will be available for project funding no matter how poor the project area is before implementation.

We believe that project benefits should determine the alternative level of cost-sharing under the ability to pay test. This alternative level establishes a benefits based floor (BBF) below which the non-Federal cost-share will not be reduced. Therefore, when projects are fully eligible, the reduction in the non-Federal share would be such as to set the share equal to one fourth of the project's benefit/cost ratio, when this ratio is expressed as a percentage. For example, if a project has a benefit/cost ratio of 1.2, share reductions cannot bring the share below one fourth of this, or 30 percent of project first costs. In this example, if the "normal" level of cost-sharing, i.e. the amount required by section 103(a) or 103(b), is less than 30 percent, there will be no reduction under the ability to pay provision.

The selection of the factor of one fourth, or 25 percent, is based on the minimum level of non-Federal cost-sharing for flood control projects specified in sections 103(a) and 103(b). The position is equivalent to that expressed by Senator Stafford "[e]ven the poorest communities should be able to find a quarter to invest in order to get $1 or more in return." (see Background section above). It is expected that the reductions in cost-sharing will occur most often when normal non-Federal costs are closer to the 50 percent maximum than to the 25 percent minimum. Congress may occasionally authorize projects which have a benefit cost ratio below one. The determination of alternative levels of cost-sharing under the ability to pay test should apply in these cases, despite the low ratio. These projects will not generate the same level of economic resources (compared to project costs) as economically justified projects, and project beneficiaries will not have the same ability to pay from this source. Under no circumstances however, do we believe that the non-Federal share should be less than the five percent minimum payment of section 103(a)(1)(A), Pub. L. 99-662.

Operations and maintenance (O&M) expenses of flood control projects have traditionally been the responsibility of a non-Federal interest. This will not change; any reductions in non-Federal shares under the ability to pay provision will apply to first costs only. For administrative simplicity, we will use one fourth of the benefit cost ratio as an alternative share, even though the costs in this calculation include O&M costs. This ratio will be calculated based on the discount rate which the Corps is using to evaluate projects at the time the local cooperation agreement (LCA) is signed. For LCA's signed in 1987 for example, an 8.875 percent discount rate would be used.

The Use of Per Capita Personal Income to Determine Project Eligibility

Project eligibility for reductions in the non-Federal share will be determined by the per capita personal income of the project area (using county income as the surrogate for project area income) and the state in which the project is located. Although alternative concepts of a "fiscal capacity" or "ability to pay" index have been developed and promoted, many government programs continue to use per capita income (including Medicaid and Aid to Families with Dependent Children). The data are readily available from the Bureau of Economic Analysis on a yearly basis.

Per capita income reflects two of the three factors set out in the aforementioned report of the Senate Committee on Environment and Public Works: (1) Income in relation to need; and (2) unemployment. "Income in relation to need" is a phrase which suggests consideration not only of income, but of the relative cost of living in a particular geographic area. Unfortunately, information on regional cost of living differentials is not available from the Federal government. Data from private sources, including the *Rand McNally Places Rated Guide, 1985* are useful indicators of price differentials among urban areas, but fail to document the cost of living for rural areas within the United States, making it impossible to calculate state and county price indices accurately from these sources. Moreover, the cost of living measures reported by these sources place a heavy emphasis on the current market value of housing, a factor that may not be relevant for people who have lived in an area for a long time. This leaves us with no comprehensive information to use as a basis for precisely adjusting income figures to account for differences in the cost of living. On the other hand such a precise calculation may not be necessary. When current housing value is given a smaller weight and urban price indices are combined for all regions in a single state, the cost of living differentials set out in the private sources decrease dramatically. Per capita income thus already takes into account, to a great degree, 'income in relation to need." This fact, in addition to the unavailability of comprehensive cost of living data reaffirms the choice of per capita income as our basic statistical measure.

We should note two exceptions: Alaska and Hawaii. Even when current housing value is given less weight in calculations for these two states, their relative costs of living are far higher than the rest of the country. This finding is consistent with that of the Office of Personnel Management, which conducts surveys to determine the salary levels of Federal employees in Alaska and Hawaii which would compensate the employees for the higher prices they must pay. Cost of living adjustments will therefore be made for Alaska and Hawaii, based on the Federal Government's salary differentials in those two states for Federal employees living in non-Federal housing without Federal Commissary provisions. Pay differentials may be different for various regions in Alaska and Hawaii. For administrative simplicity, the differentials for the two most populated regions will be used; Anchorage AK (a 25 percent pay differential in 1986), and Oahu HI (a 22.5 percent differential in 1986). Information on the salary differentials for the period 1982-86 is available in FPM Bulletins 591-30, 591-32, and 591-33.

Unemployment, the second factor mentioned in the Committee report, tends to be lower in areas where per capita personal income is higher. For example, using state information for 1985, the correlation coefficient between these variables was .47, a value which is significantly different from zero statistically. Moreover, since ability to pay is more a function of the *level* of income than the *distribution* of income, PCI is preferred over a measure of unemployment.

The third factor set out in the Committee Report is the sponsor's borrowing capability. We have carefully considered how best to incorporate this factor in our calculations. We conclude that such an incorporation is inappropriate. Borrowing capability as measured for example by an entity's credit rating, will reflect a number of factors including but not limited to the underlying economic resource base. Local governments may have committed themselves to providing public services which are either discretionary or are provided by the private sector in other locations. In some cases, a community may be unable to raise additional capital because its citizens are simply unwilling to vote for the tax increases that might be required. We conclude therefore, that the borrowing capability of the local sponsor should not be a factor in the ability to pay determination.

The interim final rule will use a three year average of PCI. Although this will create lags in recognizing when an area has had a deterioration or improvement in its economic circumstances, it also reduces the likelihood that findings will be based on temporary circumstances. Other Federal programs are based on a three year average.

All U.S. Territories will be eligible for the full amount of cost-share reduction. Unpublished data from the Bureau of Economic Analysis indicates that in 1985, per capita personal income in the territories ranged from 66 percent of the U.S. average (Guam) to 25 percent of the U.S. average (American Samoa).

The Eligibility Formula

The eligibility factor (EF) will be determined by:

$$EF = a - b_1 \text{ (State PCI Index)} - b_2 \text{ (County PCI Index)}$$

where a, b_1, and b_2 are positive constants. The county and state PCI indices are a measure of the local PCI relative to the national average. If per capita income in a state equals the national average, the state's index number would be 100. If a project includes beneficiaries in more than one county, the PCI index is weighted by the share of project benefits which can be located geographically. If EF is less than zero, the project is not eligible for cost-share reductions under the ability to pay test. If EF is greater than or equal to one, the project is eligible for full application of the benefits based cost-share alternative described above. For EF less than one but greater than zero, the value represents the degree of application for which the project is eligible. For example if the normal cost-share is 50 percent and the minimum cost-share under the ability to pay formula is 30 percent and EF = .6, the project will receive 60 percent of the difference between 50 percent and 30 percent. The cost-share in this example would be 38 percent (50 − .60 (50−30) = 38).

The formula reflects our view that state participation in the cost-sharing of flood control projects should be encouraged. The choice of county data to represent a project area's per capita income is based on considerations of practicality and policy. County data is available from the Bureau of Economic Analysis, Department of Commerce, on a yearly basis. If smaller governmental units were used, there would be an increased likelihood of inaccurate statistics. Equally important, by defining in advance the governmental region to represent the project area, the non-Federal interests are free to identify the local sponsor without regard to the effect this might have on the ability to pay determination.

In selecting the parameters a, b_1, and b_2 we have had two objectives. First, in order to encourage state participation where necessary, we have given equal weights to state and county PCI, that is b_1 and b_2 have been set equal to each other (they are kept separate in the formula, so that the weights may be changed, if appropriate, after comments are considered). Second, we have been guided by our sense of the intent of Congress that the ability to pay provision should only apply in exceptional circumstances. The formula has therefore been constructed so that two thirds of the counties would not be eligible; 20 percent of the counties would be eligible for the full application; and the remaining 13⅓ percent would be eligible for a partial application.

Available county PCI data lag behind available state PCI data. Currently, county information is available through 1984, state information through 1986. The interim guidelines require the use of the three latest years even if these years are different for counties and states. We believe that this represents the most up-to-date economic profile of a project area which can be applied uniformly to all projects.

Other Factors

We have retained the five percent minimum cash requirement of section 103(a)(1)(A) even for projects where the ability to pay test leads to a reduction in the non-Federal cost-share. This requirement is intended to demonstrate that the non-Federal interest has a serious commitment to the project. Congress did not want the cash requirement changed when the normal cost-share level was at the maximum of 50 percent (see section 103(a)(3)) nor did it want the requirement waived when the non-Federal interest chooses to make a deferred payment (see section 103(a)(4)). By keeping the 5 percent cash requirement under the ability to pay provision, it may be necessary to negotiate cash repayments to the local sponsor at the end of the project, or to make Federal payments for Lands, Easements, Rights of Way, Relocations, and Dredge Material Disposal Areas (LERRD) that are normally the responsibility of the non-Federal interest.

The interim final rule also contains a provision allowing the non-Federal interest to waive application of the ability to pay test. This might be most advantageous when project benefits have not been fully enumerated before authorization or when additional research is necessary to separate flood control benefits and costs from total costs of a multi-purpose project. In these cases, local sponsors may want to accept the normal cost-share so that implementation of the project will not be delayed.

E.O. 12291 and Regulatory Flexibility Act

This rule is not a major rule within the meaning of Executive Order 12291, because it is not likely to result in: (1) An annual effect on the economy of $100 million or more; (2) a major increase in costs or prices for consumers, individual industries, Federal, State, or local government agencies, or geographic regions; or (3) significant adverse effects on competition, employment, investment, productivity, innovation, or on the ability of the United States based enterprises to compete with foreign based enterprises in domestic or export markets.

Pursuant to 5 U.S.C. 605(b) I hereby certify that this rule will not have a significant economic impact on a substantial number of small entities because it imposes few, if any, administrative burdens of any sort on small entities.

Furthermore, the number of entities affected by this rule is small and the relief granted in individual cases, though significant to the parties involved, is not significant within the meaning of the Regulatory Flexibility Act.

List of Subjects in 33 CFR Part 241

Community facilities, Flood control, Intergovernmental relations, Water resources.

Dated: September 18, 1987.

Approved:
Peter J. Cahill,
Colonel, GS, Executive, OASA(CW).

The Corps of Engineers hereby establishes a new part 241 in Title 33, Chapter II as follows:

PART 241—FLOOD CONTROL COST-SHARING REQUIREMENTS UNDER THE ABILITY TO PAY PROVISION—SECTION 103(m) OF P.L. 99-662 [ER 1165-2-121]

Sec.
241.1 Purpose.
241.2 Applicability.
241.3 References.
241.4 General policy.
241.5 Procedures for estimating the alternative cost-share.
241.6 Application of test.
Appendix A—State Per Capita Personal Income Index Numbers, State Income as a Percent of U.S. Average, 1984-86.
Appendix B—County Per Capita Personal Income Index Numbers, County Income as a Percent of U.S. Average, 1982-84.

Authority: Sec. 103(m), Water Resources Development Act of 1986 Pub. L. 99-662, 100 Stat. 4082, 33 U.S.C. 2201 *et seq.*

§ 241.1 Purpose.

This regulation gives general instructions on the implementation of section 103(m) of Pub. L. 99-662 as it applies to flood control projects.

§ 241.2 Applicability.

This regulation applies to all HQUSACE elements and field operating agencies of the Corps of Engineers having Civil Works responsibilities.

§ 241.3 References.

(a) Section 103, Water Resources Development Act, 1986, Pub. L. 99-662, 100 Stat. 4082, 33 U.S.C. 2201 *et seq.*

(b) U.S. Water Resources Council, *Economic and Environmental Principles and Guidelines for Water and Related Land Resources Implementation Studies*, March 10, 1983.

(c) Office of Personnel Management, *FPM Bulletin* 591-30.

(d) Office of Personnel Management, *FPM Bulletin* 591-32.

(e) Office of Personnel Management, *FPM Bulletin* 591-33.

(f) U.S. Dept. of Commerce, Bureau of Economic Analysis, *Local Area Personal Income, 1979-84*, Volumes 1-9.

(g) U.S. Army Corps of Engineers, *Reference Handbook.*

§ 241.4 General policy.

(a) Procedures described herein will be used to establish an "ability to pay" test which will be applied to all flood control projects. As a result of the application of the test, some projects will be cost-shared by the non-Federal interest at a lower level than the non-Federal share would be normally under the provisions of section 103 of Pub. L. 99-662.

(b) The ability to pay test shall be conducted independently of any analysis of a project sponsor's ability to finance its ultimate share of proposed project costs. The test shall not be used to affect project scope, or to change budgetary priorities among projects competing for scarce Federal funds.

(c) Since the normal non-Federal cost-share is substantially less than full costs in every case, the ability to pay test should be structured so that reductions in the level of cost-sharing will be granted in only a limited number of cases of severe economic hardship.

(d) Any reductions in the level of non-Federal cost-sharing as a result of the application of this test will be applied to construction costs only. The non-Federal interests will continue to be responsible for the costs of operations, maintenance and rehabilitation.

(e) Section 103(m) requires that all cost-sharing agreements for flood control be subject to the ability to pay test. This includes any projects specifically authorized by Congress as well as the "continuing authority" projects constructed under section 14 of the 1946 Flood Control Act (33 U.S.C. 701r) and section 205 of the 1948 Flood Control Act (33 U.S.C. 701s).

(f) The test should be based not only on the economic circumstances within a project area, but also on the conditions of the state(s) in which the project is located. Although states' policies with respect to supporting local interests on flood control projects are not uniform, the state represents a potential source of financial assistance which should be considered in the analysis.

(g) The alternative level of cost-sharing determined under the ability to pay principle should be governed in part by project benefits. If, as a result of the project, local beneficiaries receive more income, or are required to use fewer resources on flood damage repair or replacement, or on flood insurance, a portion of these resources should be available to pay for the non-Federal share, even in those cases where an analysis of current economic conditions indicates that there are relatively limited resources in the project area and its state.

(h) The non-Federal interest may, at its discretion, waive the application of the ability to pay test. In this case, the non-Federal interest shall be considered to have the ability to pay the normal cost-share and no further research will be required.

§ 241.5 Procedures for estimating the alternative cost-share.

(a) *Step one.* Determine the maximum reduction in the level of non-Federal cost-sharing for qualifying projects.

(1) Calculate the ratio of flood control benefits (developed using the Water Resources Council's *Principles and Guidelines*—ref. b) to flood control costs for the authorized project based on the discount rate which the Corps is currently using to evaluate projects. Costs include operations and maintenance as well as first costs. Divide the result by four.

(2) If the ratio determined in § 241.5a(1), when expressed as a percentage, is less than the level of cost-sharing that would normally be required by section 103(a) or 103(b), Pub. L. 99-662, projects may be eligible for a reduction in the non-Federal share to this "benefits based floor" (BBF), or for a partial reduction to a share between the normal level and the BBF. In no case however, will the non-Federal cost-share be less than five percent.

(3) If the ratio determined in § 241.5a(1), when expressed as a percentage, is greater than the level of cost-sharing that would normally be required by section 103(a) or 103(b), Pub. L. 99-662, the normal level of cost-sharing will apply.

(b) *Step two.* Determine project eligibility. Projects may qualify for the full amount of the reduction in cost-sharing calculated in Step one, or for some fraction of the reduction in cost-sharing, depending on a measure of the economic resources of the project area and of the state or states in which the project is located.

(1) For each of the three latest calendar years for which information is available, determine the level of per capita personal income in the state or states in which the project sponsors are located, and compare this to the national average of per capita personal income. Source: Dept. of Commerce, Bureau of Economic Analysis as presented in the *Survey of Current Business.* For Alaska and Hawaii only, divide the per capita personal income figure by one plus the percentage used in the Federal Government's cost of living pay differential for Federal workers who purchase local retail and who use private housing, employed in Anchorage, AK and Oahu, HI (see References § 241.3(c) and § 241.3(d). Index each state's per capita personal income to the national average (U.S. = 100), and calculate the three year average of the state's index number.

(2) For each of the three latest calendar years for which information is

available, determine the level of per capita personal income in the county or counties where project benefits accrue (the "project area", and compare this to the national average of per capita personal income. Source: Reference § 241.3(e). For Alaska and Hawaii only, divide the per capita personal income figure by one plus the percentage used in the Federal Government's cost of living pay differential for Federal workers who purchase local retail and who use private housing, employed in Anchorage, AK and Oahu, HI. Index each county's per capita personal income to the national average (U.S. = 100), and calculate the three year average of the county's index number.

(3) To assure consistency, the calculations in § 241.5(b) (1) and (2) will be performed by HQUSACE and distributed to all field elements. This information is included in Appendices A and B to this document. In subsequent years the information will be included in the Corps' Reference Handbook, Ref. § 241.3(g), which is updated annually.

(4) When the project area includes more than one county, calculate a composite project area index by taking a weighted average of the county index numbers, the weights being equal to the relative levels of benefits received in each county.

(5) Calculate an "eligibility factor" for the project according to the following formula:

$$EF = a - b_1 \times (\text{state factor}) - b_2 \times (\text{area factor}).$$

If EF is one or more, the project is eligible for the full reduction in cost-share to the benefits based floor. If EF is zero or less, the project is not eligible for a reduction. If EF is between zero and one, the non-Federal cost-share will be reduced proportionately to an amount which is greater than the BBF but less than the normal non-Federal cost-share. See paragraph § 241.5(c) below. The values of a, b_1, and b_2 will be determined by HQUSACE. The parameter values will be based on the latest available data and set so that 20 percent of counties have an EF of 1.0 or more, while 66.7 percent have an EF of 0 or less. These values will be adjusted periodically as new information becomes available. Changes will be published in the Corps' Reference Handbook. The values as of July 1, 1987, are:

$a = 14.45646$
$b_1 = 0.08858$
$b_2 = 0.08858$

Note that currently, b_1 and b_2 are equal, giving the same weight to state and local income levels.

(6) For Puerto Rico, Guam and other U.S. territories the eligibility factor is administratively established to be equal to 1.

(c) *Application of the ability to pay formula to the basic cost-sharing provisions of section 103.* If a flood control project has a BBF which is less than the normal cost-share and an EF which is greater than zero, the non-Federal cost-share will be reduced. The actual reduction is determined by applying the ability to pay formula to the basic flood control cost-sharing provisions of section 103 of Pub. L. 99-662 as follows:

(1) when EF = 1:

$$\text{cost-share} = \text{BBF}$$

(2) when EF < 1, for structural projects covered by section 103(a):

(i) if LERRD equals or exceeds 45 percent:

$$\text{cost-share} = 50 - EF \times (50 - \text{BBF})$$

(ii) if LERRD exceeds 20 percent but is less than 45 percent:

$$\text{cost-share} = (\text{LERRD} + 5) - EF \times [(\text{LERRD} + 5) - \text{BBF}]$$

(iii) if LERRD is less than 20 percent:

$$\text{cost-share} = 25 - EF \times (25 - \text{BBF})$$

(3) when EF < 1, for non-structural projects covered by Section 103(b):

$$\text{cost-share} = 25 - EF \times (25 - \text{BBF})$$

(4) In no case can the non-Federal share be less than five percent.

Note: LERRD equals the costs of lands, easements, rights-of-way, relocations, and dredged material disposal areas.

§ 241.6 Application of test.

(a) A preliminary ability to pay test will be applied during the study phase of any proposed project. If the ability to pay cost-share is lower than the share that would normally apply, the revised estimated cost-share will be used for budgetary and other planning purposes.

(b) The official application of the ability to pay test will be made at the time the Local Cooperation Agreement (LCA) between the Corps of Engineers and the Non-Federal interest is signed. For structural flood control projects, the normal level of cost-sharing will not be known until the end of the project (since the normal level as specified in section 103(a) includes LERRD). In this case, if the Eligibility Factor is greater than zero but less than one, the ability to pay non-Federal share will be determined using estimated costs. For all projects, the LCA will include a clause indicating the results of the ability to pay test. If a project is eligible for a lower non-Federal share, the revised share will be specified (there will be no recalculation of this share once the LCA is signed). If at the time of project completion, the normal non-Federal share based on actual costs, is less than the ability to pay share specified in the LCA, the normal share will apply. For all projects, an exhibit attached to the LCA will include: The benefits based floor (BBF) determined in § 241.5(a); the eligibility factor (EF) determined in § 241.5(b); if the Eligibility Factor is greater than zero and less than one, the estimated normal non-Federal share; and the formula used in determining the ability to pay share as described in paragraphs § 241.5(c)(1) through (c)(4).

(c) For structural projects, the project sponsor will be required to provide a cash payment equal to a minimum of five per cent of estimated total project costs during the period of construction, regardless of the outcome of the ability to pay test. If formula § 241.5(c)(2) is used to estimate the non-Federal share, the resultant non-Federal cash requirement could continue to exceed five per cent. For example, if LERRD is 10 percent of costs, the normal cost-share requirement is 25 percent, including 15 percent cash payment; if the revised Non-Federal share under ability to pay is 20 percent, there remains a 10 percent cash requirement. In these cases, the Non-Federal interest shall pay its share of cash during construction at a rate proportionate to its projected final cash share. If the non-Federal share, adjusted for ability to pay considerations, exceeds 30 percent, section 103(a)(4), permitting deferred payment of the amount exceeding 30 percent, will still apply.

(d) If the normal LERRD plus five percent cash requirement exceeds the ability to pay cost-sharing requirement, the Federal Government will make any necessary adjustments to the Non-Federal interest through Federal payments for LERRD or reimbursement. The adjustment mechanism will be negotiated and the Local Cooperation Agreement will include a description of the mechanism.

[FR Doc. 87-21949 Filed 9-22-87; 8:45 am]

BILLING CODE 3710-08-M

Appendix A.—State Per Capita Personal Income Index Numbers, State Income as a Percent of U.S. Average, 1984-86

State	State Index No.
Alabama	76.90
Alaska	104.14
Arizona	91.71
Arkansas	75.33

State	State Index No.
California	115.84
Colorado	106.36
Connecticut	130.59
Delaware	103.32
District of Columbia	130.75
Florida	99.09
Georgia	90.61
Hawaii	85.79
Idaho	79.85
Illinois	106.50
Indiana	89.93
Iowa	91.48
Kansas	99.44
Kentucky	78.00
Louisiana	80.96
Maine	86.33
Maryland	114.04
Massachusetts	118.43
Michigan	98.13
Minnesota	101.86
Mississippi	66.59
Missouri	94.94
Montana	81.38
Nebraska	95.23
Nevada	104.48
New Hampshire	107.90
New Jersey	124.38
New Mexico	78.10
New York	116.32
North Carolina	84.05
North Dakota	86.83
Ohio	95.27
Oklahoma	87.91
Oregon	91.35
Pennsylvania	96.70
Rhode Island	100.76
South Carolina	76.88
South Dakota	81.55
Tennessee	81.21
Texas	96.07
Utah	75.45
Vermont	87.41
Virginia	104.95
Washington	100.59
West Virginia	73.67
Wisconsin	95.42
Wyoming	94.02

Source: Survey of Current Business, April, 1987.

Note.—Alaska income figures divided by 1.25 Hawaii income figures divided by 1.15, 1984, 85; By 1.225, 1986.

Appendix B.—County Per Capita Personal Index Numbers, County Income as a Percent of U.S. Average, 1982–84

County	County PCI Index
Alabama	
Autauga	77.01
Baldwin	81.85
Barbour	66.37
Bibb	61.76
Blount	64.26
Bullock	60.46
Butler	64.14
Calhoun	71.88
Chambers	67.49
Cherokee	60.04
Chilton	69.44
Choctaw	67.32
Clarke	64.10
Clay	66.14
Cleburne	63.34
Coffee	76.72
Colbert	79.24
Conecuh	61.17
Coosa	55.87
Covington	72.99
Crenshaw	72.75
Cullman	70.04
Dale	71.11
Dallas	65.71
De Kalb	65.43
Elmore	77.71
Escambia	72.56
Etowah	76.04
Fayette	71.32
Franklin	74.10
Geneva	74.29
Greene	49.02
Hale	53.04
Henry	63.45
Houston	77.47
Jackson	67.38
Jefferson	93.78
Lamar	73.87
Lauderdale	82.78
Lawrence	61.35
Lee	70.49
Limestone	73.71
Lowndes	58.54
Macon	55.37
Madison	96.41
Marengo	61.83
Marion	64.37
Marshall	73.89
Mobile	77.58
Monroe	69.84
Montgomery	92.44
Morgan	84.75
Perry	45.55
Pickens	62.25
Pike	67.41
Randolph	62.70
Russell	68.14
St. Clair	70.38
Shelby	90.04
Sumter	53.39
Talladega	66.03
Tallapoosa	69.52
Tuscalossa	76.39
Walker	79.51
Washington	62.61
Wilcox	58.75
Winston	70.50
Alaska	
Aleutian Islands	104.84
Anchorage Borough	128.00
Bethel	63.82
Bristol Bay Bor.	130.67
Dillingham	70.55
Fairbanks N. Star	135.39
Haines Borough	104.57
Juneau Borough	139.70
Kenai Peninsula	92.26
Ketchikan Gateway	122.19
Kobuk	76.29
Kodiak Island	91.27
Matanuska-Susitna	100.47
Nome	88.00
North Slope Bor.	161.41
Pr. of Wales-Outer Ketchikan	93.64
Sitka Borough	106.76
Skagway-Yakutat-Angoon	98.48
Se Fairbanks	81.78
Valdez-Cordova	114.35
Wade Hampton	46.63
Wrangell-Petersburg	113.45
Yukon-Koyukuk	61.52
Arizona	
Apache	47.93
Cochise	71.38
Coconino	71.73
Gila	75.15
Graham	57.80
Greenlee	72.27
La Paz (2 Years)	65.79
Maricopa	101.85
Mohave	74.32
Navajo	60.95
Pima	90.66
Pinal	65.20
Santa Cruz	70.75
Yavapai	85.82
Yuma (2 Years)	69.78
Arkansas	
Arkansas	81.85
Ashley	68.71
Baxter	84.26
Benton	86.92
Boone	75.12
Bradley	66.43
Calhoun	58.13
Carroll	73.90
Chicot	52.26
Clark	68.69
Clay	64.72
Cleburne	69.87
Cleveland	62.93
Columbia	77.91
Conway	70.88
Craighead	75.89
Crawford	63.72
Crittenden	65.65
Cross	60.60
Dallas	65.81
Desha	61.74
Drew	59.15
Faulkner	78.63
Franklin	66.70
Fulton	48.18
Garland	85.70
Grant	73.20
Greene	67.23
Hempstead	68.13
Hot Spring	72.67
Howard	86.73
Independence	72.78
Izard	67.54

County	County PCI Index
Jackson	64.02
Jefferson	75.39
Johnson	66.94
Lafayette	63.87
Lawrence	68.28
Lee	47.92
Lincoln	52.68
Little River	67.42
Logan	63.60
Lonoke	72.87
Madison	61.61
Marion	62.92
Miller	72.77
Mississippi	69.78
Monroe	56.80
Montgomery	62.71
Nevada	64.22
Newton	48.18
Ouachita	72.99
Perry	58.63
Phillips	54.96
Pike	65.56
Poinsett	62.85
Polk	59.95
Pope	70.75
Prairie	65.67
Pulaski	99.01
Randolph	57.61
St. Francis	61.57
Saline	78.57
Scott	64.02
Searcy	47.87
Sebastian	87.77
Sevier	70.14
Sharp	63.52
Stone	50.11
Union	94.15
Van Buren	57.50
Washington	76.58
White	67.20
Woodruff	66.25
Yell	66.05
California	
Alameda	119.92
Alpine	80.21
Amador	91.68
Butte	81.65
Calaveras	70.62
Colusa	102.24
Contra Costa	138.51
Del Norte	75.08
El Dorado	95.10
Fresno	91.84
Glenn	94.57
Humboldt	85.73
Imperial	80.69
Inyo	92.72
Kern	92.07
Kings	80.10
Lake	87.00
Lassen	76.95
Los Angeles	114.07
Madera	81.74
Marin	174.75
Mariposa	86.64
Mendocino	86.31
Merced	81.79
Modoc	82.27
Mono	88.41
Monterey	111.39
Napa	120.87
Nevada	83.23
Orange	131.86
Placer	105.09
Plumas	81.08
Riverside	103.37
Sacramento	101.66
San Benito	82.85
San Bernardino	92.71
San Diego	105.74
San Francisco	141.22
San Joaquin	92.22
San Luis Obispo	98.23
San Mateo	156.13
Santa Barbara	120.16
Santa Clara	136.29
Santa Cruz	105.45
Shasta	84.74
Sierra	82.98
Siskiyou	80.64
Solano	100.81
Sonoma	115.58
Stanislaus	91.09
Sutter	89.28
Tehama	77.77
Trinity	73.08
Tulare	80.40
Tuolumne	80.96
Ventura	112.17
Yolo	94.42
Yuba	73.80
Colorado	
Adams	101.60
Alamosa	80.37
Arapahoe	137.74
Archuleta	68.19
Baca	92.30
Bent	77.46
Boulder	120.55
Chaffee	91.18
Cheyenne	87.80
Clear Creek	90.10
Conejos	45.02
Costilla	62.38
Crowley	94.53
Custer	71.09
Delta	75.73
Denver	122.45
Dolores	82.13
Douglas	138.70
Eagle	112.86
Elbert	104.78
El Paso	95.94
Fremont	80.76
Garfield	109.31
Gilpin	87.62
Grand	97.15
Gunnison	68.08
Hinsdale	66.37
Huerfano	71.43
Jackson	91.55
Jefferson	129.31
Kiowa	118.18
Kit Carson	93.63
Lake	70.46
La Plata	80.49
Larimer	91.20
Las Animas	69.57
Lincoln	105.46
Logan	92.08
Mesa	87.03
Mineral	97.81
Moffat	82.82
Montezuma	86.98
Montrose	74.67
Morgan	95.48
Otero	81.03
Ouray	88.40
Park	90.38
Phillips	97.34
Pitkin	155.60
Prowers	85.54
Pueblo	81.95
Rio Blanco	105.34
Rio Grande	79.26
Routt	114.30
Saguache	65.12
San Juan	74.79
San Miguel	63.10
Sedgwick	101.54
Summit	113.37
Teller	90.15
Washington	103.42
Weld	90.58
Yuma	100.37
Connecticut	
Fairfield	158.08
Hartford	125.36
Litchfield	117.96
Middlesex	121.03
New Haven	113.15
New London	112.35
Tolland	110.22
Windham	96.00
Delaware	
Kent	83.64
New Castle	115.60
Sussex	96.45
Florida	
Alachua	76.49
Baker	64.08
Bay	81.39
Bradford	57.07
Brevard	96.27
Broward	123.96
Calhoun	55.59
Charlotte	92.91
Citrus	71.41
Clay	94.72
Collier	116.31
Columbia	68.17
Dade	102.87
De Soto	68.74
Dixie	52.46
Duval	95.65
Escambia	80.42
Flagler	75.91
Franklin	52.79
Gadsden	53.78
Gilchrist	69.85
Glades	48.91
Gulf	67.35
Hamilton	63.45
Hardee	65.47

County	County PCI Index
Hendry	79.35
Hernando	75.38
Highlands	80.66
Hillsborough	89.57
Holmes	52.70
Indian River	106.55
Jackson	64.30
Jefferson	60.26
Lafayette	71.63
Lake	92.48
Lee	101.53
Leon	84.80
Levy	60.37
Liberty	58.01
Madison	66.52
Manatee	103.56
Marion	76.85
Martin	113.73
Monroe	88.58
Nassau	84.72
Okaloosa	82.23
Okeechobee	60.04
Orange	99.90
Osceola	85.03
Palm Beach	130.73
Pasco	80.71
Pinellas	113.11
Polk	82.71
Putnam	71.99
St. Johns	94.78
St. Lucie	79.41
Santa Rosa	82.18
Sarasota	126.95
Seminole	96.82
Sumter	66.95
Suwannee	65.44
Taylor	71.64
Union	47.77
Volusia	90.66
Wakulla	63.72
Walton	56.01
Washington	61.79
Georgia	
Appling	73.56
Atkinson	67.93
Bacon	61.69
Baker	64.30
Baldwin	72.23
Banks	71.18
Barrow	78.67
Bartow	77.19
Ben Hill	67.59
Berrien	70.14
Bibb	86.46
Bleckley	73.29
Brantley	59.62
Brooks	56.32
Bryan	66.70
Bulloch	67.11
Burke	64.88
Butts	69.10
Calhoun	72.25
Camden	82.40
Candler	60.20
Carroll	78.62
Catoosa	71.16
Charlton	60.77
Chatham	90.41
Chattahoochee	60.74
Chattooga	63.19
Cherokee	85.30
Clarke	84.83
Clay	50.31
Clayton	92.14
Clinch	64.28
Cobb	118.73
Coffee	64.36
Colquitt	70.15
Columbia	92.70
Cook	56.92
Coweta	86.71
Crawford	73.16
Crisp	66.38
Dade	61.17
Dawson	84.67
Decatur	70.39
De Kalb	116.85
Dodge	64.81
Dooly	77.98
Dougherty	78.52
Douglas	84.84
Early	65.79
Echols	55.93
Effingham	76.56
Elbert	76.57
Emanuel	60.20
Evans	66.09
Fannin	64.99
Fayette	120.55
Floyd	87.61
Forsyth	93.78
Franklin	79.88
Fulton	109.42
Gilmer	74.02
Glascock	79.59
Glynn	89.67
Gordon	80.06
Grady	68.92
Greene	64.77
Gwinnett	112.83
Habersham	69.40
Hall	91.75
Hancock	56.15
Haralson	81.22
Harris	69.97
Hart	74.43
Heard	76.05
Henry	91.29
Houston	88.92
Irwin	71.08
Jackson	76.89
Jasper	79.66
Jeff Davis	74.13
Jefferson	65.21
Jenkins	57.48
Johnson	63.11
Jones	77.28
Lamar	71.55
Lanier	60.57
Laurens	74.26
Lee	74.64
Liberty	66.60
Lincoln	66.71
Long	57.35
Lowndes	73.25
Lumpkin	68.55
McDuffie	70.75
McIntosh	55.11
Macon	58.15
Madison	73.51
Marion	63.49
Meriwether	62.46
Miller	64.52
Mitchell	62.26
Monroe	74.40
Montgomery	63.99
Morgan	78.78
Murray	70.33
Muscogee	83.48
Newton	80.34
Oconee	86 71
Oglethorpe	72.62
Paulding	73.51
Peach	79.25
Pickens	79.21
Pierce	62.29
Pike	75.37
Polk	74.36
Pulaski	76.25
Putnam	71.13
Quitman	55.00
Rabun	61.81
Randolph	54.86
Richmond	84.44
Rockdale	93.75
Schley	69.39
Screven	65.01
Seminole	69.13
Spalding	78.93
Stephens	72.72
Stewart	57.37
Sumter	74.31
Talbot	56.49
Taliaferro	72.13
Tattnall	62.31
Taylor	65.97
Telfair	71.66
Terrell	59.42
Thomas	78.21
Tift	77.95
Toombs	64.38
Towns	58.51
Treutlen	58.02
Troup	83.08
Turner	71.07
Twiggs	57.76
Union	50.44
Upson	71.35
Walker	74.99
Walton	75.65
Ware	78.71
Warren	63.68
Washington	70.39
Wayne	70.84
Webster	69.91
Wheeler	58.15
White	64.15
Whitfield	88.26
Wilcox	62.60
Wilkes	75.09
Wilkinson	72.56
Worth	67.44
Hawaii	
Hawaii	69 79
Honolulu	95.11
Kauai	73.07
Maui and Kalawao	81.12

County	County PCI Index
Idaho	
Ada	98.15
Adams	83.49
Bannock	81.50
Bear Lake	71.06
Benewah	81.09
Bingham	67.53
Blaine	95.00
Boise	77.47
Bonner	69.44
Bonneville	86.16
Boundary	73.94
Butte	66.28
Camas	113.80
Canyon	74.98
Caribou	75.36
Cassia	78.17
Clark	124.46
Clearwater	67.41
Custer	76.38
Elmore	70.53
Franklin	65.40
Fremont Co & Yellowstone Park	70.02
Gem	76.53
Gooding	72.03
Idaho	69.58
Jefferson	59.90
Jerome	66.26
Kootenai	80.81
Latah	75.72
Lemhi	64.84
Lewis	101.42
Lincoln	77.79
Madison	51.70
Minidoka	62.79
Nez Perce	95.24
Oneida	66.74
Owyhee	53.91
Payette	73.85
Power	85.92
Shoshone	77.87
Teton	65.13
Twin Falls	84.35
Valley	81.51
Washington	79.29
Illinois	
Adams	91.73
Alexander	59.38
Bond	83.06
Boone	96.78
Brown	78.83
Bureau	100.23
Calhoun	79.64
Carroll	84.38
Cass	93.14
Champaign	87.06
Christian	96.45
Clark	84.52
Clay	80.87
Clinton	86.80
Coles	80.08
Cook	111.75
Crawford	94.70
Cumberland	65.43
De Kalb	86.46
De Witt	102.43
Douglas	91.04
Du Page	140.84
Edgar	88.61
Edwards	96.18
Effingham	83.91
Fayette	67.61
Ford	103.98
Franklin	88.47
Fulton	84.60
Gallatin	73.89
Greene	77.19
Grundy	111.95
Hamilton	73.86
Hancock	83.21
Hardin	58.39
Henderson	78.25
Henry	97.42
Iroquois	97.33
Jackson	76.90
Jasper	76.11
Jefferson	87.23
Jersey	84.63
Jo Daviess	88.44
Johnson	53.12
Kane	111.92
Kankakee	91.81
Kendall	101.88
Knox	91.17
Lake	134.13
La Salle	98.49
Lawrence	97.72
Lee	98.45
Livingston	100.48
Logan	100.05
McDonough	72.79
McHenry	115.82
McLean	99.70
Macon	97.87
Macoupin	89.41
Madison	98.92
Marion	86.62
Marshall	92.73
Mason	88.08
Massac	74.03
Menard	95.53
Mercer	84.32
Monroe	104.39
Montgomery	89.81
Morgan	97.30
Moultrie	86.80
Ogle	87.22
Peoria	103.19
Perry	91.99
Piatt	100.93
Pike	75.19
Pope	45.92
Pulaski	57.81
Putnam	95.29
Randolph	85.81
Richland	97.25
Rock Island	100.58
St. Clair	86.18
Saline	86.06
Sangamon	104.49
Schuyler	70.38
Scott	91.21
Shelby	79.73
Stark	106.00
Stephenson	101.51
Tazewell	99.10
Union	75.88
Vermilion	90.62
Wabash	98.27
Warren	88.11
Washington	92.51
Wayne	86.26
White	91.78
Whiteside	89.34
Will	100.92
Williamson	81.52
Winnebago	100.87
Woodford	98.94
Indiana	
Adams	79.72
Allen	95.90
Bartholomew	96.36
Benton	102.69
Blackford	77.71
Boone	104.64
Brown	70.68
Carroll	84.35
Cass	89.24
Clark	85.79
Clay	83.90
Clinton	89.67
Crawford	60.73
Daviess	74.16
Dearborn	84.83
Decatur	84.42
De Kalb	85.53
Delaware	81.97
Dubois	93.54
Elkhart	98.58
Fayette	82.72
Floyd	91.60
Fountain	79.86
Franklin	68.06
Fulton	78.86
Gibson	93.11
Grant	86.70
Greene	73.72
Hamilton	118.55
Hancock	97.95
Harrison	75.89
Hendricks	97.05
Henry	83.10
Howard	98.40
Huntington	89.38
Jackson	84.98
Jasper	84.48
Jay	80.70
Jefferson	81.96
Jennings	66.91
Johnson	98.48
Knox	84.11
Kosciusko	87.00
LaGrange	65.45
Lake	92.23
La Porte	90.06
Lawrence	80.97
Madison	86.50
Marion	101.46
Marshall	85.79
Martin	74.33
Miami	83.66
Monroe	72.23
Montgomery	87.17
Morgan	86.69
Newton	77.39
Noble	79.41
Ohio	75.55
Orange	67.10

County	County PCI Index
Owen	72.61
Parke	75.96
Perry	68.18
Pike	87.68
Porter	100.41
Posey	92.16
Pulaski	85.94
Putnam	77.26
Randolph	82.42
Ripley	79.53
Rush	83.30
St. Joseph	95.45
Scott	70.84
Shelby	88.25
Spencer	80.30
Starke	69.59
Steuben	82.84
Sullivan	79.14
Switzerland	62.34
Tippecanoe	84.30
Tipton	102.55
Union	84.31
Vanderburgh	100.04
Vermillion	77.52
Vigo	82.77
Wabash	85.08
Warren	83.98
Warrick	93.36
Washington	70.53
Wayne	83.19
Wells	89.24
White	90.59
Whitley	83.97
Iowa	
Adair	74.76
Adams	82.74
Allamakee	72.58
Appanoose	73.88
Audubon	82.54
Benton	90.27
Black Hawk	94.72
Boone	90.98
Bremer	91.13
Buchanan	79.27
Buena Vista	93.66
Butler	84.45
Calhoun	96.75
Carroll	94.93
Cass	91.42
Cedar	92.16
Cerro Gordo	98.69
Cherokee	87.61
Chickasaw	83.89
Clarke	75.70
Clay	91.08
Clayton	78.92
Clinton	92.27
Crawford	85.63
Dallas	98.57
Davis	66.31
Decatur	66.16
Delaware	74.16
Des Moines	92.50
Dickinson	93.64
Dubuque	88.27
Emmet	89.84
Fayette	79.03
Floyd	84.75
Franklin	88.37
Fremont	95.84
Greene	97.65
Grundy	93.82
Guthrie	84.97
Hamilton	99.44
Hancock	91.29
Hardin	95.63
Harrison	81.38
Henry	87.11
Howard	77.35
Humboldt	101.20
Ida	87.84
Iowa	95.11
Jackson	77.69
Jasper	92.81
Jefferson	77.82
Johnson	93.88
Jones	77.95
Keokuk	89.14
Kossuth	89.47
Lee	88.20
Linn	103.59
Louisa	80.63
Lucas	88.51
Lyon	78.77
Madison	85.55
Mahaska	81.83
Marion	94.13
Marshall	100.03
Mills	87.86
Mitchell	85.09
Monona	85.71
Monroe	80.63
Montgomery	93.38
Muscatine	103.65
O'Brien	94.14
Osceola	91.47
Page	85.49
Palo Alto	92.96
Plymouth	82.96
Pocahontas	97.75
Polk	112.56
Pottawattamie	91.85
Poweshiek	95.65
Ringgold	73.38
Sac	91.28
Scott	100.92
Shelby	87.16
Sioux	77.79
Story	87.39
Tama	89.19
Taylor	71.74
Union	89.76
Van Buren	73.62
Wapello	86.69
Warren	94.60
Washington	98.44
Wayne	80.86
Webster	94.26
Winnebago	97.97
Winneshiek	73.30
Woodbury	94.08
Worth	84.53
Wright	107.96
Kansas	
Allen	87.22
Anderson	93.31
Atchison	77.41
Barber	111.76
Barton	115.09
Bourbon	93.58
Brown	89.16
Butler	105.91
Chase	93.22
Chautauqua	75.52
Cherokee	76.71
Cheyenne	96.48
Clark	116.91
Clay	86.29
Cloud	95.78
Coffey	96.03
Comanche	115.30
Cowley	90.51
Crawford	85.44
Decatur	115.37
Dickinson	88.04
Doniphan	76.93
Douglas	79.12
Edwards	114.09
Elk	81.90
Ellis	93.74
Ellsworth	101.22
Finney	108.44
Ford	109.79
Franklin	92.32
Geary	83.61
Gove	102.25
Graham	99.78
Grant	131.01
Gray	120.18
Greeley	151.42
Greenwood	95.58
Hamilton	116.79
Harper	110.44
Harvey	93.19
Haskell	117.44
Hodgeman	136.21
Jackson	86.88
Jefferson	87.44
Jewell	99.30
Johnson	148.81
Kearny	102.55
Kingman	91.64
Kiowa	104.68
Labette	79.38
Lane	147.43
Leavenworth	85.17
Lincoln	105.25
Linn	87.85
Logan	98.29
Lyon	88.83
McPherson	100.96
Marion	93.06
Marshall	82.76
Meade	129.96
Miami	87.36
Mitchell	107.54
Montgomery	87.36
Morris	80.36
Morton	114.38
Nemaha	90.13
Neosho	93.46
Ness	115.05
Norton	101.33
Osage	83.27
Osborne	104.36
Ottawa	98.38
Pawnee	101.26
Phillips	112.80
Pottawatomie	76.77

County	County PCI Index
Pratt	122.05
Rawlins	98.34
Reno	97.15
Republic	94.60
Rice	103.62
Riley	83.97
Rooks	99.35
Rush	118.08
Russell	128.85
Saline	101.61
Scott	122.65
Sedgwick	112.75
Seward	119.19
Shawnee	107.55
Sheridan	109.38
Sherman	96.33
Smith	98.60
Stafford	136.11
Stanton	105.80
Stevens	133.41
Sumner	104.94
Thomas	94.95
Trego	107.25
Wabaunsee	89.73
Wallace	96.23
Washington	95.75
Wichita	167.33
Wilson	85.25
Woodson	86.69
Wyandotte	82.99
Kentucky	
Adair	56.41
Allen	67.79
Anderson	83.96
Ballard	80.87
Barren	71.03
Bath	59.27
Bell	64.74
Boone	90.64
Bourbon	116.35
Boyd	90.50
Boyle	80.47
Bracken	73.12
Breathitt	58.41
Breckinridge	58.27
Bullitt	72.12
Butler	52.53
Caldwell	74.28
Calloway	70.58
Campbell	87.73
Carlisle	70.28
Carroll	78.15
Carter	55.45
Casey	46.50
Christian	71.29
Clark	85.34
Clay	57.38
Clinton	42.87
Crittenden	72.93
Cumberland	57.87
Daviess	91.76
Edmonson	47.17
Elliott	43.99
Estill	59.40
Fayette	112.70
Fleming	55.28
Floyd	58.63
Franklin	100.72
Fulton	78.82
Gallatin	66.19
Garrard	69.23
Grant	71.40
Graves	78.96
Grayson	59.02
Green	64.73
Greenup	77.12
Hancock	82.96
Hardin	69.51
Harlan	63.42
Harrison	77.88
Hart	58.42
Henderson	90.68
Henry	74.91
Hickman	64.72
Hopkins	95.49
Jackson	43.32
Jefferson	101.44
Jessamine	77.66
Johnson	65.17
Kenton	91.92
Knott	55.35
Knox	51.93
Larue	67.84
Laurel	61.98
Lawrence	59.31
Lee	49.26
Leslie	48.51
Letcher	58.19
Lewis	48.96
Lincoln	55.08
Livingston	72.45
Logan	70.49
Lyon	65.45
McCracken	95.00
McCreary	40.56
McLean	76.83
Madison	67.58
Magoffin	51.79
Marion	54.65
Marshall	75.37
Martin	67.28
Mason	78.52
Meade	60.87
Menifee	41.61
Mercer	74.83
Metcalfe	51.30
Monroe	54.32
Montgomery	69.10
Morgan	48.35
Muhlenberg	84.32
Nelson	73.31
Nicholas	65.12
Ohio	70.00
Oldham	97.09
Owen	61.10
Owsley	39.65
Pendleton	69.12
Perry	61.97
Pike	68.84
Powell	53.88
Pulaski	64.21
Robertson	61.16
Rockcastle	46.72
Rowan	57.68
Russell	53.11
Scott	85.75
Shelby	84.30
Simpson	78.83
Spencer	68.72
Taylor	68.18
Todd	60.16
Trigg	76.12
Trimble	69.68
Union	83.34
Warren	72.76
Washington	61.34
Wayne	46.58
Webster	86.48
Whitley	66.26
Wolfe	46.05
Woodford	121.04
Louisiana	
Acadia	73.76
Allen	58.25
Ascension	86.69
Assumption	69.49
Avoyelles	54.06
Beauregard	67.56
Bienville	72.42
Bossier	82.95
Caddo	96.64
Calcasieu	89.54
Caldwell	58.20
Cameron	85.69
Catahoula	61.14
Claiborne	74.55
Concordia	73.68
De Soto	72.47
East Baton Rouge	101.08
East Carroll	57.32
East Feliciana	65.32
Evangeline	61.78
Franklin	53.27
Grant	57.45
Iberia	94.40
Iberville	75.95
Jackson	72.81
jefferson	106.52
Jefferson Davis	68.49
Lafayette	116.28
Lafourche	86.04
La Salle	58.53
Lincoln	72.89
Livingston	74.19
Madison	46.38
Morehouse	65.01
Natchitoches	62.20
Orleans	94.84
Ouachita	77.81
Plaquemines	85.62
Pointe Coupee	75.53
Rapides	71.78
Red River	58.81
Richland	64.34
Sabine	48.88
St. Bernard	92.41
St. Charles	100.14
St. Helena	55.83
St. James	89.46
St. John/Baptist	90.04
St. Landry	66.63
St. Martin	70.12
St. Mary	91.85
St. Tammany	103.75
Tangipahoa	63.39
Tensas	64.96
Terrebonne	88.26
Union	68.61
Vermilion	82.94

County	County PCI Index
Vernon	59.91
Washington	66.89
Webster	77.85
West Baton Rouge	83.05
West Carroll	51.55
West Feliciana	54.58
Winn	58.20
Maine	
Androscoggin	83.69
Aroostook	70.01
Cumberland	102.27
Franklin	72.06
Hancock	84.15
Kennebec	87.38
Knox	84.00
Lincoln	88.90
Oxford	76.81
Penobscot	81.41
Piscataquis	72.68
Sagadahoc	91.62
Somerset	74.15
Waldo	64.77
Washington	67.96
York	84.40
Maryland	
Allegany	78.82
Anne Arundel	111.83
Baltimore	119.14
Calvert	102.94
Caroline	79.86
Carroll	106.40
Cecil	89.80
Charles	97.67
Dorchester	83.72
Frederick	100.82
Garrett	64.26
Harford	105.07
Howard	137.13
Kent	88.78
Montgomery	166.64
E. George's	109.92
Queen Anne's	95.68
St. Mary's	85.92
Somerset	72.26
Talbot	119.65
Washington	90.22
Wicomico	86.54
Worcester	94.68
Baltimore Ind City	86.26
Massachusetts	
Barnstable	119.12
Berkshire	100.91
Bristol	93.31
Dukes	101.04
Essex	118.66
Franklin	92.92
Hampden	98.67
Hampshire	91.16
Middlesex	132.22
Nantucket	126.11
Norfolk	138.57
Plymouth	103.19
Suffolk	99.90
Worcester	97.70
Michigan	
Alcona	67.60
Alger	67.91
Allegan	80.89
Alpena	76.14
Antrim	73.41
Arenac	68.38
Baraga	65.99
Barry	80.32
Bay	88.87
Benzie	73.88
Berrien	87.42
Branch	82.43
Calhoun	93.69
Cass	86.54
Charlevoix	77.74
Cheboygan	68.28
Chippewa	65.08
Clare	64.81
Clinton	93.15
Crawford	64.65
Delta	75.19
Dickinson	90.48
Eaton	100.19
Emmet	84.61
Genesee	100.72
Gladwin	65.15
Gogebic	71.61
Grand Traverse	93.20
Gratiot	82.18
Hillsdale	79.20
Houghton	65.52
Huron	84.28
Ingham	96.49
Ionia	77.44
Iosco	71.27
Iron	79.34
Isabella	69.99
Jackson	88.32
Kalamazoo	100.49
Kalkaska	70.45
Kent	96.59
Keweenaw	65.25
Lake	55.95
Lapeer	88.94
Leelanau	89.07
Lenawee	88.82
Livingston	102.16
Luce	81.07
Mackinac	76.01
Macomb	111.03
Manistee	76.60
Marquette	76.25
Mason	70.77
Mecosta	56.36
Menominee	76.64
Midland	103.76
Missaukee	60.10
Monroe	94.61
Montcalm	75.71
Montmorency	68.06
Muskegon	82.25
Newaygo	70.15
Oakland	137.12
Oceana	68.42
Ogemaw	60.93
Ontonagon	60.89
Osceola	62.87
Oscoda	56.71
Otsego	78.06
Ottawa	94.32
Presque Isle	67.87
Roscommon	71.86
Saginaw	89.85
St. Clair	93.76
St. Joseph	83.80
Sanilac	77.81
Schoolcraft	71.58
Shiawassee	89.55
Tuscola	80.13
Van Buren	76.51
Washtenaw	112.88
Wayne	95.72
Wexford	70.11
Minnesota	
Atkin	65.62
Anoka	99.67
Becker	65.08
Beltrami	60.86
Benton	75.32
Big Stone	73.69
Blue Earth	91.74
Brown	90.76
Carlton	75.99
Carver	102.07
Cass	68.30
Chippewa	81.41
Chisago	86.89
Clay	80.40
Clearwater	55.50
Cook	81.02
Cottonwood	92.06
Crow Wing	78.05
Dakota	116.69
Dodge	85.18
Douglas	74.21
Faribault	91.54
Fillmore	83.44
Freeborn	95.70
Goodhue	94.62
Grant	82.48
Hennepin	130.28
Houston	81.08
Hubbard	61.27
Isanti	77.39
Itasca	72.35
Jackson	88.24
Kanabec	71.63
Kandiyohi	81.27
Kittson	92.15
Koochiching	76.92
Lac Qui Parle	79.48
Lake	59.99
Lake of the Woods	74.39
Le Sueur	87.36
Lincoln	68.19
Lyon	86.26
McLeod	98.42
Mahnomen	69.83
Marshall	84.77
Martin	103.81
Meeker	77.51
Mille Lacs	79.31
Morrison	63.45
Mower	97.09
Murray	87.00
Nicollett	85.38
Nobles	91.79
Norman	97.03

County	County PCI Index
Olmsted	117.28
Otter Tail	81.62
Pennington	81.56
Pine	67.61
Pipestone	77.79
Polk	87.02
Pope	71.36
Ramsey	115.10
Red Lake	78.74
Redwood	88.35
Renville	89.13
Rice	82.84
Rock	84.14
Roseau	83.34
St. Louis	86.84
Scott	102.99
Sherburne	78.70
Sibley	79.21
Stearns	78.50
Steele	102.77
Stevens	81.05
Swift	71.33
Todd	60.13
Traverse	80.60
Wabasha	89.33
Wadena	67.85
Waseca	92.97
Washington	109.99
Watonwan	96.44
Wilkin	84.88
Winona	81.82
Wright	83.63
Yellow Medicine	85.23
Mississippi	
Adams	79.17
Alcorn	70.96
Amite	59.74
Attala	55.23
Benton	53.90
Bolivar	54.76
Calhoun	55.37
Carroll	53.10
Chickasaw	62.38
Choctaw	57.20
Claiborne	52.83
Clarke	64.02
Clay	62.74
Coahoma	60.96
Copiah	60.81
Covington	60.85
De Soto	79.04
Forrest	73.90
Franklin	58.73
George	63.26
Greene	48.54
Grenada	69.47
Hancock	68.56
Harrison	73.58
Hinds	92.73
Holmes	45.72
Humphreys	51.58
Issaquena	48.89
Itawamba	63.49
Jackson	75.29
Jasper	61.12
Jefferson	63.15
Jefferson Davis	53.17
Jones	74.89
Kemper	47.71
Lafayette	56.87
Lamar	63.89
Lauderdale	79.96
Lawrence	53.39
Leake	62.69
Lee	80.57
Leflore	62.55
Lincoln	63.78
Lowndes	71.72
Madison	67.88
Marion	58.93
Marshall	51.09
Monroe	67.34
Montgomery	53.71
Neshoba	61.82
Newton	68.61
Noxubee	48.60
Oktibbeha	60.10
Panola	56.06
Pearl River	62.46
Perry	70.07
Pike	61.97
Pontotoc	62.06
Prentiss	58.34
Quitman	53.01
Rankin	78.81
Scott	59.58
Sharkey	56.30
Simpson	61.70
Smith	62.30
Stone	68.07
Sunflower	53.49
Tallahatchie	49.08
Tate	68.25
Tippah	64.99
Tishomingo	61.32
Tunica	51.19
Union	69.31
Walthall	57.32
Warren	84.38
Washington	66.00
Wayne	52.92
Webster	64.58
Wilkinson	53.44
Winston	61.33
Yalobusha	58.83
Yazoo	63.12
Missouri	
Adair	72.34
Andrew	78.11
Atchison	81.87
Audrain	85.23
Barry	73.51
Barton	74.46
Bates	79.23
Benton	65.24
Bollinger	46.76
Boone	85.93
Buchanan	89.99
Butler	66.46
Caldwell	78.06
Callaway	87.80
Camden	74.34
Cape Girardeau	86.36
Carroll	85.13
Carter	45.43
Cass	91.78
Cedar	58.48
Chariton	79.50
Christian	73.80
Clark	64.60
Clay	107.47
Clinton	86.23
Cole	96.83
Cooper	83.78
Crawford	71.15
Dade	69.94
Dallas	60.28
Daviess	63.10
De Kalb	68.22
Dent	60.97
Douglas	49.20
Dunklin	59.87
Franklin	87.43
Gasconade	76.49
Gentry	70.46
Greene	89.37
Grundy	77.59
Harrison	67.38
Henry	87.37
Hickory	56.59
Holt	73.90
Howard	74.91
Howell	61.70
Iron	68.53
Jackson	102.73
Jasper	81.65
Jefferson	82.93
Johnson	72.36
Knox	66.56
Laclede	70.86
Lafayette	88.06
Lawrence	68.41
Lewis	65.81
Lincoln	84.81
Linn	75.49
Livingston	81.53
McDonald	58.11
Macon	71.31
Madison	57.09
Maries	57.13
Marion	78.50
Mercer	62.98
Miller	73.80
Mississippi	63.16
Moniteau	72.61
Monroe	76.76
Montgomery	78.85
Morgan	62.68
New Madrid	60.57
Newton	68.22
Nodaway	69.41
Oregon	52.92
Osage	68.10
Ozark	52.04
Pemiscot	56.92
Perry	73.27
Pettis	83.93
Phelps	72.24
Pike	74.19
Platte	107.39
Polk	65.78
Pulaski	57.97
Putnam	62.57
Ralls	69.46
Randolph	81.99
Ray	85.12
Reynolds	55.47
Ripley	47.13
St. Charles	105.55

County	County PCI Index
St. Clair	69.39
Ste. Genevieve	77.08
St. Francois	75.27
St. Louis	131.70
Saline	87.35
Schuyler	68.69
Scotland	69.66
Scott	68.39
Shannon	49.43
Shelby	74.00
Stoddard	65.78
Stone	71.82
Sullivan	70.08
Taney	79.64
Texas	59.18
Vernon	73.91
Warren	86.42
Washington	55.13
Wayne	44.64
Webster	65.30
Worth	59.89
Wright	60.67
St. Louis Ind City	93.19
Montana	
Beaverhead	79.75
Big Horn	63.71
Blaine	68.46
Broadwater	70.01
Carbon	78.97
Carter	68.49
Cascade	90.24
Chouteau	86.19
Custer	87.96
Daniels	87.04
Dawson	86.59
Deer Lodge	68.81
Fallon	80.33
Fergus	83.16
Flathead	84.28
Gallatin	78.74
Garfield	84.83
Glacier	81.87
Golden Valley	69.10
Granite	76.25
Hill	84.77
Jefferson	74.91
Judith Basin	65.40
Lake	67.19
Lewis and Clark	98.22
Liberty	95.30
Lincoln	70.30
McCone	90.22
Madison	71.61
Meagher	70.13
Mineral	75.29
Missoula	82.84
Musselshell	81.76
Petroleum	54.83
Phillips	77.80
Pondera	91.26
Powder River	83.72
Powell	89.72
Prairie	68.30
Ravalli	69.91
Richland	79.74
Roosevelt	73.78
Rosebud	87.70
Sanders	68.86
Sheridan	93.30
Silver Bow	92.97
Stillwater	81.04
Sweet Grass	86.24
Teton	80.12
Toole	108.12
Treasure	81.56
Valley	82.58
Wheatland	88.05
Wibaux	63.08
Yellowstone	101.19
Park (Incl. Ylwst. Ntl. Pk.)	81.40
Nebraska	
Adams	99.83
Antelope	90.34
Arthur	83.86
Banner	89.94
Blaine	75.47
Boone	81.54
Box Butte	75.88
Boyd	72.52
Brown	91.17
Buffalo	85.49
Burt	94.08
Butler	96.73
Cass	87.42
Cedar	69.34
Chase	95.08
Cherry	83.54
Cheyenne	98.19
Clay	100.11
Colfax	89.75
Cuming	90.55
Custer	85.24
Dakota	81.40
Dawes	79.06
Dawson	92.65
Deuel	110.42
Dixon	73.55
Dodge	100.08
Douglas	109.56
Dundy	100.96
Fillmore	101.71
Franklin	101.84
Frontier	82.46
Furnas	84.42
Gage	91.26
Garden	110.70
Garfield	80.74
Gosper	97.74
Grant	102.39
Greeley	79.21
Hall	94.91
Hamilton	100.13
Harlan	91.07
Hayes	63.88
Hitchcock	90.73
Holt	70.21
Hooker	85.21
Howard	82.62
Jefferson	92.78
Johnson	79.01
Kearney	115.53
Keith	101.62
Keya Paha	60.59
Kimball	112.25
Knox	63.53
Lancaster	99.42
Lincoln	95.18
Logan	85.42
Loup	55.94
McPherson	77.17
Madison	93.56
Merrick	85.25
Morrill	76.98
Nance	86.63
Nemaha	86.12
Nuckolls	81.69
Otoe	89.91
Pawnee	87.90
Perkins	119.43
Phelps	117.60
Pierce	72.22
Platte	100.18
Polk	109.56
Red Willow	97.39
Richardson	85.50
Rock	92.82
Saline	102.05
Sarpy	89.69
Saunders	87.71
Scotts Bluff	88.03
Seward	87.54
Sheridan	77.41
Sherman	73.75
Sioux	73.26
Stanton	75.43
Thayer	88.39
Thomas	78.92
Thurston	65.01
Valley	81.73
Washington	96.19
Wayne	69.11
Webster	84.26
Wheeler	55.61
York	105.78
Nevada	
Churchill	85.08
Clark	101.91
Douglas	128.89
Eklo	101.87
Esmeralda	93.92
Eureka	92.43
Humboldt	77.76
Lander	88.05
Lincoln	88.07
Lyon	87.88
Mineral	95.06
Nye	93.09
Pershing	87.80
Storey	94.80
Washoe	120.85
White Pine	87.68
Carson City	105.71
New Hampshire	
Belknap	95.07
Carroll	94.76
Cheshire	95.39
Coos	85.65
Grafton	93.55
Hillsborough	109.71
Merrimack	101.58
Rockingham	111.40
Strafford	91.30
Sullivan	88.74

County	County PCI Index
New Jersey	
Atlantic	112.12
Bergen	153.40
Burlington	106.13
Camden	103.15
Cape May	107.09
Cumberland	87.77
Essex	111.03
Gloucester	97.44
Hudson	94.70
Hunterdon	140.49
Mercer	117.85
Middlesex	123.85
Monmouth	121.39
Morris	150.24
Ocean	105.62
Passaic	106.65
Salem	92.90
Somerset	153.20
Sussex	107.42
Union	135.50
Warren	108.27
New Mexico	
Bernalillo	96.42
Catron	53.89
Chaves	81.79
Cibola	48.00
Colfax	81.22
Curry	81.63
De Baca	75.00
Dona Ana	67.57
Eddy	85.80
Grant	71.31
Guadalupe	52.98
Harding	77.04
Hidalgo	71.65
Lea	96.89
Lincoln	84.04
Los Alamos	159.36
Luna	69.11
McKinley	50.67
Mora	39.33
Otero	75.82
Quay	77.93
Rio Arriba	54.89
Roosevelt	66.30
Sandoval	78.09
San Juan	76.79
San Miguel	51.46
Santa Fe	91.73
Sierra	76.56
Socorro	54.72
Taos	66.89
Torrance	56.94
Union	72.41
Valencia	73.91
New York	
Albany	111.50
Allegany	65.85
Bronx	82.57
Broome	98.77
Cattaraugus	73.34
Cayuga	81.06
Chautauqua	85.66
Chemung	88.76
Chenango	75.46
Clinton	72.25
Columbia	84.72
Cortland	77.26
Delaware	74.12
Dutchess	109.35
Erie	99.06
Essex	78.84
Franklin	68.08
Fulton	82.15
Genesee	91.24
Greene	83.20
Hamilton	80.25
Herkimer	80.43
Jefferson	80.85
Kings	90.21
Lewis	67.17
Levingston	86.58
Madison	82.82
Monroe	116.59
Montgomery	87.44
Nassau	155.17
New York	157.77
Niagara	95.06
Oneida	89.55
Onandaga	102.56
Ontario	95.17
Orange	95.09
Orleans	88.44
Oswego	82.91
Otsego	77.69
Putnam	121.79
Queens	115.10
Rensselaer	90.61
Richmond	115.26
Rockland	134.28
St. Lawrence	70.67
Saratoga	95.10
Schenectady	110.60
Schoharie	70.53
Schuyler	75.51
Seneca	88.99
Steuben	85.02
Suffolk	115.44
Sullivan	87.15
Tioga	87.58
Tompkins	80.98
Ulster	95.82
Warren	89.95
Washington	76.24
Wayne	93.05
Westchester	163.00
Wyoming	76.24
Yates	82.07
North Carolina	
Alamance	87.54
Alexander	78.85
Alleghany	68.18
Anson	66.06
Ashe	62.63
Avery	61.05
Beaufort	72.03
Bertie	65.95
Bladen	59.17
Brunswick	64.75
Buncombe	86.03
Burke	78.16
Cabarrus	89.11
Caldwell	74.25
Camden	66.79
Carteret	70.84
Caswell	58.59
Catawba	91.01
Chatham	86.29
Cherokee	55.71
Chowan	69.71
Clay	55.67
Cleveland	76.92
Columbus	61.63
Craven	78.75
Cumberland	73.85
Currituck	67.76
Dare	67.43
Davidson	83.20
Davie	84.36
Duplin	67.69
Durham	95.92
Edgecombe	76.32
Forsyth	106.85
Franklin	66.62
Gaston	83.91
Gates	72.80
Graham	60.11
Granville	66.78
Greene	73.38
Guilford	101.91
Halifax	62.20
Harnett	62.96
Haywood	78.90
Henderson	93.09
Hertford	66.89
Hoke	49.69
Hyde	53.46
Iredell	80.85
Jackson	66.00
Johnston	72.08
Jones	62.76
Lee	87.26
Lenoir	75.75
Lincoln	81.57
McDowell	71.59
Macon	70.80
Madison	60.09
Martin	72.14
Mecklenburg	108.90
Mitchell	70.82
Montgomery	68.45
Moore	88.80
Nash	89.86
New Hanover	84.78
Northampton	54.35
Onslow	73.77
Orange	93.68
Pamlico	71.89
Pasquotank	78.42
Pender	63.55
Perquimans	66.56
Person	69.82
Pitt	75.87
Polk	93.00
Randolph	84.89
Richmond	66.64
Robeson	56.94
Rockingham	79.71
Rowan	84.13
Rutherford	73.99
Sampson	68.82
Scotland	68.37
Stanly	81.52
Stokes	76.17
Surry	79.09

County	County PCI Index
Swain	58.37
Transylvania	82.11
Tyrrell	79.38
Union	88.88
Vance	72.00
Wake	109.29
Warren	64.34
Washington	77.41
Watauga	65.14
Wayne	72.25
Wilkes	76.03
Wilson	86.00
Yadkin	80.92
Yancey	57.00
North Dakota	
Adams	92.23
Barnes	96.77
Benson	81.31
Billings	89.97
Bottineau	104.84
Bowman	103.15
Burke	110.95
Burleigh	110.16
Cass	110.78
Cavalier	109.61
Dickey	85.33
Divide	122.41
Dunn	92.91
Eddy	101.01
Emmons	72.60
Foster	93.93
Golden Valley	102.17
Grand Forks	88.02
Grant	69.60
Griggs	95.89
Hettinger	95.41
Kidder	77.84
La Moure	82.01
Logan	83.84
McHenry	93.41
McIntosh	84.16
McKenzie	88.97
McLean	100.47
Mercer	107.64
Morton	86.38
Mountrail	84.68
Nelson	103.18
Oliver	91.21
Pembina	108.00
Pierce	87.22
Ramsey	103.15
Ransom	91.39
Renville	109.95
Richland	87.86
Rolette	62.92
Sargent	96.71
Sheridan	87.72
Sioux	55.34
Slope	84.19
Stark	92.42
Steele	117.67
Stutsman	97.61
Towner	101.26
Traill	110.45
Walsh	92.18
Ward	96.35
Wells	105.92
Williams	115.29

County	County PCI Index
Ohio	
Adams	53.17
Allen	91.94
Ashland	85.76
Ashtabula	81.81
Athens	59.18
Auglaize	89.33
Belmont	83.76
Brown	76.62
Butler	95.20
Carroll	73.33
Champaign	79.33
Clark	87.41
Clermont	83.94
Clinton	84.30
Columbiana	75.15
Coshocton	85.88
Crawford	84.75
Cuyahoga	113.32
Darke	83.19
Defiance	91.84
Delaware	96.39
Erie	95.18
Fairfield	92.51
Fayette	74.94
Franklin	101.27
Fulton	91.03
Gallia	77.04
Geauga	111.74
Greene	96.15
Guernsey	72.87
Hamilton	108.70
Hancock	106.15
Hardin	75.54
Harrison	76.03
Henry	91.95
Highland	71.13
Hocking	73.35
Holmes	57.91
Huron	84.77
Jackson	68.41
Jefferson	86.13
Knox	79.22
Lake	106.96
Lawrence	69.01
Licking	90.28
Logan	88.07
Lorain	91.78
Lucas	99.84
Madison	75.60
Mahoning	89.14
Marion	87.96
Medina	101.27
Meigs	70.13
Mercer	86.26
Miami	93.72
Monroe	73.73
Montgomery	101.66
Morgan	80.92
Morrow	71.83
Muskingum	82.61
Noble	67.84
Ottawa	96.59
Paulding	81.16
Perry	67.80
Pickaway	83.08
Pike	63.53
Portage	87.96
Preble	83.27
Putnam	87.29

County	County PCI Index
Richland	91.08
Ross	76.95
Sandusky	90.98
Scioto	66.04
Seneca	87.32
Shelby	83.89
Stark	93.50
Summit	103.42
Trumbull	95.52
Tuscarawas	82.98
Union	88.76
Van Wert	96.43
Vinton	58.83
Warren	88.43
Washington	84.88
Wayne	88.19
Williams	91.78
Wood	93.53
Wyandot	92.45
Oklahoma	
Adair	55.46
Alfalfa	107.78
Atoka	52.77
Beaver	97.21
Beckham	75.87
Blaine	82.14
Bryan	74.44
Caddo	78.54
Canadian	104.31
Carter	95.02
Cherokee	61.20
Choctaw	59.39
Cimarron	117.84
Cleveland	99.94
Coal	61.58
Comanche	75.55
Cotton	78.21
Craig	89.21
Creek	84.88
Custer	87.15
Delaware	59.70
Dewey	94.79
Ellis	101.54
Garfield	106.44
Garvin	85.09
Grady	82.09
Grant	125.95
Greer	76.96
Harmon	72.10
Harper	111.40
Haskell	64.79
Hughes	66.31
Jackson	77.97
Jefferson	79.69
Johnston	54.13
Kay	118.63
Kingfisher	96.17
Kiowa	79.37
Latimer	59.72
Le Flore	64.27
Lincoln	81.94
Logan	85.30
Love	71.90
McClain	84.25
McCurtain	60.24
McIntosh	66.92
Major	91.96
Marshall	71.17
Mayes	76.28

County	County PCI Index
Murray	74.01
Muskogee	83.18
Noble	87.70
Nowata	79.15
Okfuskee	62.51
Oklahoma	113.60
Okmulgee	76.43
Osage	80.34
Ottawa	81.85
Pawnee	85.24
Payne	74.26
Pittsburg	68.59
Pontotoc	85.00
Pottawatomie	87.93
Pushmataha	49.76
Roger Mills	69.67
Rogers	90.86
Seminole	80.80
Sequoyah	61.51
Stephens	94.86
Texas	126.24
Tillman	71.33
Tulsa	115.69
Wagoner	79.61
Washington	131.11
Washita	65.19
Woods	101.63
Woodward	87.72
Oregon	
Baker	74.93
Benton	84.21
Clackamas	101.85
Clatsop	84.61
Columbia	84.28
Coos	79.38
Crook	80.59
Curry	85.58
Deschutes	80.45
Douglas	80.27
Gilliam	101.04
Grant	75.82
Harney	78.47
Hood River	91.13
Jackson	80.99
Jefferson	79.62
Josephine	69.64
Klamath	78.11
Lake	83.07
Lane	82.40
Lincoln	84.78
Linn	79.11
Malheur	72.14
Marion	87.03
Morrow	108.42
Multnomah	105.13
Polk	78.12
Sherman	109.31
Tillamook	81.30
Umatilla	80.03
Union	79.35
Wallowa	81.79
Wasco	94.78
Washington	110.27
Wheeler	90.95
Yamhill	83.86
Pennsylvania	
Adams	82.11
Allegheny	108.86
Armstrong	84.32
Beaver	88.62
Bedford	64.74
Berks	104.26
Blair	75.83
Bradford	73.82
Bucks	111.77
Butler	88.72
Cambria	80.71
Cameron	79.90
Carbon	86.59
Centre	76.13
Chester	122.08
Clarion	77.11
Clearfield	80.69
Clinton	72.61
Columbia	77.84
Crawford	73.85
Cumberland	107.62
Dauphin	101.27
Delaware	119.71
Elk	89.95
Erie	88.35
Fayette	76.14
Forest	70.87
Franklin	88.95
Fulton	63.44
Greene	71.41
Huntingdon	67.41
Indiana	79.15
Jefferson	80.88
Juniata	79.59
Lackawanna	87.15
Lancaster	96.65
Lawrence	78.39
Lebanon	91.95
Lehigh	107.78
Luzerne	86.42
Lycoming	83.55
McKean	86.45
Mercer	82.43
Mifflin	70.98
Monroe	88.83
Montgomery	142.43
Montour	88.34
Northampton	100.39
Northumberland	79.46
Perry	82.16
Philadelphia	89.22
Pike	86.39
Potter	67.89
Schuylkill	83.86
Synder	74.18
Somerset	76.99
Sullivan	69.40
Susquehanna	74.94
Tioga	67.68
Union	79.30
Venango	86.50
Warren	85.86
Washington	91.44
Wayne	81.49
Westmoreland	93.23
Wyoming	75.12
York	95.10
Rhode Island	
Bristol	112.76
Kent	106.62
Newport	102.46
Providence	96.17
Washington	103.05
South Carolina	
Abbeville	65.37
Aiken	88.48
Allendale	53.36
Anderson	76.51
Bamberg	56.49
Barnwell	72.83
Beaufort	92.05
Berkeley	68.86
Calhoun	70.49
Charleston	83.92
Cherokee	76.39
Chester	76.67
Chesterfield	68.95
Clarendon	53.95
Colleton	59.76
Darlington	65.97
Dillon	54.41
Dorchester	76.65
Edgefield	60.73
Fairfield	62.00
Florence	74.57
Georgetown	69.23
Greenville	91.73
Greenwood	80.35
Hampton	65.14
Horry	78.37
Jasper	63.09
Kershaw	81.75
Lancaster	70.73
Laurens	75.49
Lee	57.90
Lexington	91.39
McCormick	60.57
Marion	61.76
Marlboro	52.49
Newberry	84.15
Oconee	78.66
Orangeburg	64.00
Pickens	78.60
Richland	88.76
Saluda	64.54
Spartanburg	83.11
Sumter	65.34
Union	66.42
Williamsburg	53.72
York	87.96
South Dakota	
Aurora	64.49
Beadle	90.47
Bennett	63.43
Bon Homme	77.63
Brookings	75.55
Brown	91.49
Brule	81.65
Buffalo	56.23
Butte	77.78
Campbell	76.37
Charles Mix	66.01
Clark	80.22
Clay	73.34
Codington	82.05
Corson	52.37
Custer	76.09

County	County PCI Index
Davison	84.97
Day	78.10
Deuel	75.03
Dewey	64.31
Douglas	65.32
Edmunds	76.31
Fall River	91.23
Faulk	80.54
Grant	80.63
Gregory	74.80
Haakon	88.63
Hamlin	73.95
Hand	87.83
Hanson	64.15
Harding	85.05
Hughes	94.36
Hutchinson	77.76
Hyde	92.75
Jackson	63.01
Jerauld	68.04
Jones	105.23
Kingsbury	86.10
Lake	80.63
Lawrence	82.03
Lincoln	87.47
Lyman	82.93
McCook	74.81
McPherson	81.60
Marshall	74.97
Meade	77.86
Mellette	61.51
Miner	78.10
Minnehaha	98.78
Moody	74.36
Pennington	89.85
Perkins	89.29
Potter	92.54
Roberts	70.25
Sanborn	71.79
Shannon	29.08
Spink	85.72
Stanley	92.23
Sully	127.78
Todd	44.13
Tripp	82.68
Turner	84.70
Union	87.20
Walworth	88.08
Yankton	81.48
Ziebach	66.70

Tennessee

County	County PCI Index
Anderson	94.18
Bedford	74.97
Benton	71.71
Bledsoe	55.39
Blount	82.82
Bradley	77.73
Campbell	55.53
Cannon	67.82
Carroll	75.67
Carter	60.69
Cheatham	75.51
Chester	59.50
Claiborne	54.65
Clay	53.34
Cocke	55.19
Coffee	81.98
Crockett	64.78
Cumberland	61.24
Davidson	100.55
Decatur	60.25
De Kalb	71.66
Dickson	76.96
Dyer	74.15
Fayette	55.40
Fentress	43.89
Franklin	64.54
Gibson	69.93
Giles	77.76
Grainger	54.82
Greene	70.61
Grundy	50.96
Hamblen	64.03
Hamilton	92.01
Hancock	42.42
Hardeman	58.21
Hargin	61.26
Hawkins	63.22
Haywood	55.53
Henderson	59.96
Henry	77.03
Hickman	64.17
Houston	65.79
Humphreys	71.81
Jackson	49.19
Jefferson	65.47
Johnson	57.08
Knox	87.96
Lake	53.18
Lauderdale	60.37
Lawrence	72.45
Lewis	47.22
Lincoln	66.23
Loudon	82.06
McMinn	71.68
McNairy	61.57
Macon	67.96
Madison	79.52
Marion	64.35
Marshall	79.41
Maury	78.17
Meigs	65.72
Monroe	52.76
Montgomery	74.12
Moore	73.07
Morgan	50.55
Obion	82.99
Overton	52.86
Perry	65.15
Pickett	48.19
Polk	64.47
Putnam	69.46
Rhea	73.65
Roane	73.12
Robertson	75.12
Rutherford	83.64
Scott	50.64
Sequatchie	56.44
Sevier	72.55
Shelby	93.43
Smith	65.53
Stewart	68.19
Sullivan	86.08
Sumner	86.01
Tipton	68.51
Trousdale	77.22
Unicoi	69.67
Union	53.29
Van Buren	53.28
Warren	76.74
Washington	81.49
Wayne	57.25
Weakley	61.89
White	63.16
Williamson	108.33
Wilson	86.52

Texas

County	County PCI Index
Anderson	77.83
Andrews	106.46
Angelina	84.44
Arkansas	88.86
Archer	104.71
Armstrong	100.85
Atascosa	73.91
Austin	105.69
Bailey	68.52
Bandera	99.71
Bastrop	81.70
Baylor	100.70
Bee	68.84
Bell	83.80
Bexar	89.49
Blanco	96.12
Borden	102.43
Bosque	94.69
Bowie	86.00
Brazoria	106.40
Brazos	74.38
Brewster	91.70
Briscoe	103.53
Brooks	55.28
Brown	82.73
Burleson	72.11
Burnet	100.94
Caldwell	70.37
Calhoun	83.64
Callahan	86.73
Cameron	54.59
Camp	93.57
Carson	110.26
Cass	72.59
Castro	65.21
Chambers	87.49
Cherokee	86.69
Childress	81.86
Clay	98.14
Cochran	86.73
Coke	85.51
Coleman	82.23
Collin	128.05
Collingsworth	80.18
Colorado	89.05
Comal	107.01
Comanche	87.47
Concho	71.66
Cooke	99.24
Coryell	71.22
Cottle	94.81
Crane	108.39
Crockett	106.29
Crosby	72.69
Culberson	63.45
Dallam	97.17
Dallas	123.89
Dawson	84.31
Deaf Smith	85.00
Delta	87.99
Denton	123.72
DeWitt	80.32

County	County PCI Index
Dickens	68.69
Dimmit	50.01
Donley	91.67
Duval	67.16
Eastland	78.25
Ector	99.70
Edwards	90.96
Ellis	97.75
El Paso	68.74
Erath	98.37
Falls	74.14
Fannin	83.76
Fayette	99.09
Fisher	89.46
Floyd	84.93
Foard	93.64
Fort Bend	124.29
Franklin	97.37
Freestone	86.27
Frio	59.24
Gaines	77.40
Galveston	108.65
Garza	88.11
Gillespie	109.56
Glasscock	145.85
Goliad	89.05
Gonzales	90.35
Gray	114.08
Grayson	94.71
Gregg	101.29
Grimes	84.04
Guadalupe	87.23
Hale	78.90
Hall	82.61
Hamilton	74.25
Hansford	102.84
Hardeman	93.57
Hardin	88.73
Harris	118.69
Harrison	80.20
Hartley	82.50
Haskell	86.97
Hays	80.50
Hemphill	92.96
Henderson	73.63
Hidalgo	51.31
Hill	81.59
Hockley	87.79
Hood	109.61
Hopkins	98.21
Houston	92.78
Howard	92.21
Hudspeth	79.80
Hunt	87.34
Hutchinson	116.04
Irion	115.66
Jack	100.88
Jackson	97.42
Jasper	78.31
Jeff Davis	97.76
Jefferson	107.40
Jim Hogg	86.57
Jim Wells	75.56
Johnson	99.54
Jones	87.50
Karnes	82.62
Kaufman	92.99
Kendall	116.60
Kennedy	129.30
Kent	73.68
Kerr	112.39
Kimble	87.89
King	78.81
Kinney	80.08
Kleberg	75.19
Knox	79.47
Lamar	82.22
Lamb	92.83
Lampasas	84.87
La Salle	47.76
Lavaca	92.80
Lee	81.73
Leon	94.54
Liberty	92.02
Limestone	79.51
Lipscomb	100.66
Live Oak	80.11
Llano	103.20
Loving	193.55
Lubbock	92.08
Lynn	73.31
McCulloch	84.95
McLennan	92.07
McMullen	115.55
Madison	77.41
Marion	61.08
Martin	96.99
Mason	74.74
Matagorda	85.17
Maverick	33.97
Medina	77.68
Menard	90.91
Midland	134.04
Milam	88.75
Mills	97.67
Mitchell	86.85
Montague	85.25
Montgomery	121.30
Moore	97.07
Morris	86.13
Motley	57.99
Nacogdoches	79.75
Navarro	88.68
Newton	68.07
Nolan	93.07
Nueces	91.52
Ochiltree	109.60
Oldham	89.16
Orange	84.33
Palo Pinto	90.50
Panola	77.91
Parker	98.89
Parmer	74.43
Pecos	81.34
Polk	74.36
Potter	92.87
Presidio	72.43
Rains	81.48
Randall	111.14
Reagan	98.30
Real	57.39
Red River	67.76
Reeves	71.99
Refugio	97.13
Roberts	107.91
Robertson	69.70
Rockwall	134.04
Runnels	92.36
Rusk	94.39
Sabine	68.27
San Augustine	62.75
San Jacinto	71.68
San Patricio	79.54
San Saba	75.67
Schleicher	96.66
Scurry	96.44
Shackleford	100.28
Shelby	72.82
Sherman	144.04
Smith	105.03
Somervell	104.78
Starr	33.13
Stephens	88.23
Sterling	87.91
Stonewall	92.92
Sutton	88.33
Swisher	74.94
Tarrant	111.95
Taylor	98.84
Terrell	103.69
Terry	82.83
Throckmorton	96.39
Titus	94.96
Tom Green	97.70
Travis	106.95
Trinity	67.85
Tyler	85.75
Upshur	71.93
Upton	90.86
Uvalde	69.30
Val Verde	59.31
Van Zandt	87.42
Victoria	107.04
Walker	69.98
Waller	85.93
Ward	92.78
Washington	106.01
Webb	50.42
Wharton	85.14
Wheeler	88.36
Wichita	103.62
Wilbarger	97.35
Willacy	48.70
Williamson	99.84
Wilson	68.67
Winkler	92.20
Wise	95.58
Wood	92.68
Yoakum	103.92
Young	112.10
Zapata	55.13
Zavala	48.01
Utah	
Beaver	57.74
Box Elder	77.53
Cache	62.84
Carbon	86.20
Daggett	58.97
Davis	76.71
Duchesne	71.94
Emery	68.54
Garfield	63.40
Grand	77.49
Iron	61.76
Juab	58.52
Kane	74.85
Millard	62.48
Morgan	83.95
Piute	55.24
Rich	50.84
Salt Lake	86.87

County	County PCI Index
San Juan	47.40
Sanpete	53.83
Sevier	75.04
Summit	94.96
Tooele	78.22
Uintah	76.15
Utah	57.40
Wasatch	67.14
Washington	63.11
Wayne	54.14
Weber	84.38
Vermont	
Addison	73.10
Bennington	88.49
Caledonia	73.72
Chittenden	95.39
Essex	67.30
Franklin	78.37
Grand Isle	78.07
Lamoille	80.58
Orange	72.19
Orleans	65.79
Rutland	87.41
Washington	90.29
Windham	87.28
Windsor	88.51
Virginia	
Accomack	79.40
Albemarle	97.23
Alleghany	71.18
Amelia	70.78
Amherst	74.24
Appomattox	73.05
Arlington	176.03
Augusta	80.15
Bath	88.85
Bedford	83.92
Bland	56.40
Botetourt	85.31
Brunswick	61.32
Buchanan	70.64
Buckingham	62.47
Campbell	85.91
Caroline	76.73
Carroll	59.91
Charles City	79.25
Charlotte	67.26
Chesterfield	113.55
Clarke	96.47
Craig	80.69
Culpeper	85.91
Cumberland	57.79
Dickenson	66.76
Dinwiddie	72.10
Essex	72.72
Fairfax	153.68
Fauquier	102.74
Floyd	62.30
Fluvanna	72.86
Franklin	65.33
Frederick	87.18
Giles	74.78
Gloucester	90.01
Goochland	100.75
Grayson	62.18
Greene	74.71
Greensville	60.64
Halifax	65.02
Hanover	108.71
Henrico	122.56
Henry	82.31
Highland	84.16
Isle of Wight	92.03
James City	94.17
King and Queen	77.11
King George	93.50
King William	91.24
Lancaster	99.09
Lee	60.77
Loudoun	125.65
Louisa	77.22
Lunenburg	66.43
Madison	67.74
Mathews	82.39
Mecklenburg	71.63
Middlesex	75.10
Montgomery	68.28
Nelson	68.01
New Kent	98.29
Northampton	72.54
Northumberland	87.54
Nottoway	74.06
Orange	85.75
Page	74.39
Patrick	65.28
Pittsylvania	64.38
Powhatan	81.18
Prince Edward	68.47
Prince George	68.58
Prince William	108.14
Pulaski	73.20
Rappahannock	88.26
Richmond	80.53
Roanoke	103.39
Rockbridge	75.59
Rockingham	86.09
Russell	63.80
Scott	64.70
Shenandoah	82.43
Smyth	64.85
Southampton	82.82
Spotsylvania	85.81
Stafford	99.40
Surry	81.58
Sussex	80.34
Tazewell	78.18
Warren	84.98
Washington	70.15
Westmoreland	78.67
Wise	81.42
Wythe	71.24
York	98.17
Alexandria	174.95
Bedford City	95.12
Bristol	84.80
Buena Vista	76.33
Charlottesville	97.75
Chesapeake	92.22
Clifton Forge	101.19
Colonial Heights	122.19
Covington	94.85
Danville	91.77
Emporia	99.55
Fairfax City	165.15
Falls Church	194.25
Franklin	115.59
Fredericksburg	97.62
Galax	90.04
Hampton	94.63
Harrisonburg	79.05
Hopewell	93.54
Lexington	85.03
Lynchburg	97.61
Manassas	122.68
Manassas Park	94.64
Martinsville	94.71
Newport News	97.03
Norfolk	87.84
Norton	99.26
Petersburg	96.65
Poquoson	107.68
Portsmouth	88.95
Radford	78.94
Richmond	115.39
Roanoke	96.68
Salem	100.26
South Boston	88.53
Staunton	96.17
Suffolk	84.29
Virginia Beach	109.42
Waynesboro	98.79
Williamsburg	123.69
Winchester	105.39
Washington	
Adams	107.25
Asotin	90.78
Benton	106.12
Chelan	96.59
Clallam	93.60
Clark	91.10
Columbia	125.60
Cowlitz	95.79
Douglas	90.23
Ferry	61.28
Franklin	90.56
Garfield	139.19
Grant	79.97
Grays Harbor	97.30
Island	91.80
Jefferson	95.82
King	123.99
Kitsap	101.70
Kittitas	81.20
Klickitat	85.19
Lewis	92.48
Lincoln	141.17
Mason	81.32
Okanogan	87.85
Pacific	95.04
Pend Oreille	66.15
Pierce	93.48
San Juan	110.23
Skagit	99.55
Skamania	80.33
Snohomish	99.54
Spokane	89.55
Stevens	69.10
Thurston	98.03
Wahkiakum	90.11
Walla Walla	96.93
Whatcom	85.55
Whitman	93.13
Yakima	82.58
West Virginia	
Barbour	68.76
Berkeley	79.52

County	County PCI Index
Boone	71.79
Braxton	60.39
Brooke	79.27
Cabell	86.48
Calhoun	54.36
Clay	51.85
Doddridge	56.49
Fayette	68.39
Gilmer	61.04
Grant	66.15
Greenbrier	70.18
Hampshire	59.34
Hancock	91.11
Hardy	56.31
Harrison	82.59
Jackson	75.23
Jefferson	77.06
Kanawha	100.68
Lewis	71.83
Lincoln	53.44
Logan	71.57
McDowell	66.37
Marion	86.22
Marshall	78.31
Mason	69.01
Mercer	78.12
Mineral	67.95
Mingo	66.06
Monongalia	80.40
Monroe	58.40
Morgan	74.87
Nicholas	69.95
Ohio	93.65
Pendleton	48.76
Pleasants	78.19
Pocahontas	66.49
Preston	66.92
Putnam	83.61
Raleigh	79.17
Randolph	69.70
Ritchie	62.37
Roane	63.82
Summers	59.57
Taylor	67.88
Tucker	57.90
Tyler	68.97
Upshur	70.20
Wayne	64.18
Webster	49.35
Wetzel	80.82
Wirt	61.50
Wood	88.69
Wyoming	62.19

County	County PCI Index
Wisconsin	
Adams	60.52
Ashland	73.73
Barron	78.83
Bayfield	62.64
Brown	99.55
Buffalo	80.39
Burnett	64.46
Calumet	91.84
Chippewa	77.23
Clark	73.58
Columbia	91.10
Crawford	69.90
Dane	110.04
Dodge	85.47
Door	91.57
Douglas	76.26
Dunn	69.71
Eau Claire	84.93
Florence	63.14
Fond Du Lac	90.93
Forest	56.81
Grant	80.80
Green	102.20
Green Lake	88.02
Iowa	76.25
Iron	67.20
Jackson	74.96
Jefferson	91.60
Juneau	79.67
Kenosha	102.61
Kewaunee	83.82
La Crosse	93.95
Lafayette	85.51
Langlade	71.26
Lincoln	74.38
Manitowoc	89.01
Marathon	84.63
Marinette	79.17
Marquette	70.27
Milwaukee	107.61
Monroe	81.54
Oconto	72.18
Oneida	82.75
Outagamie	96.49
Ozaukee	130.61
Pepin	76.39
Pierce	87.81
Polk	78.50
Portage	85.16
Price	74.38
Racine	104.48

County	County PCI Index
Richland	74.43
Rock	93.22
Rusk	63.81
St. Croix	95.31
Sauk	87.12
Sawyer	64.42
Sheboygan	99.14
Taylor	73.35
Trempealeau	72.32
Vernon	75.92
Vilas	69.78
Walworth	90.83
Washburn	73.55
Washington	101.35
Waukesha	123.42
Waupaca	89.35
Waushara	68.42
Winnebago	100.13
Wood	93.71
Shawano	72.63
Wyoming	
Albany	88.34
Big Horn	74.60
Campbell	105.04
Carbon	95.44
Converse	87.62
Crook	92.42
Fremont	84.42
Goshen	78.90
Hot Springs	97.93
Johnson	97.01
Laramie	109.70
Lincoln	85.46
Natrona	123.69
Niobrara	89.28
Park	100.96
Platte	75.30
Sheridan	107.65
Sublette	98.28
Sweetwater	104.37
Teton	118.02
Uinta	87.12
Washakie	93.80
Weston	106.67

Note.—Alaska Income Figures Divided by 1.25. Hawaii Income Figures Divided by 1.15.

Source: Bureau of Economic Analysis, Local Area Personal Income 1978–84.

BILLING CODE 3710-08-T

federal register

Wednesday
September 23, 1987

Part VI

Environmental Protection Agency

40 CFR Parts 262 and 271

Exception Reporting for Small Quantity Generators of Hazardous Waste; Final Rule

ENVIRONMENTAL PROTECTION AGENCY

40 CFR Parts 262 and 271

[SWH-FRL-3249-1]

Exception Reporting for Small Quantity Generators of Hazardous Waste

AGENCY: U.S. Environmental Protection Agency.

ACTION: Final rule.

SUMMARY: On March 24, 1986, the U.S. Environmental Protection Agency (EPA) promulgated final regulations for generators of between 100 and 1000 kilograms of hazardous waste in a calendar month (i.e., generators of 100–1000 kg/mo) under the Resource Conservation and Recovery Act (RCRA), as amended by the Hazardous and Solid Waste Amendments of 1984 (HSWA). In the final regulations, the Agency exempted these generators from the requirement to file an exception report in those instances where the generator did not receive confirmation of delivery of his hazardous waste shipment to the designated facility. As a result of this exemption, the Environmental Defense Fund (EDF) challenged the final rule. Based on the arguments raised by EDF, the Agency proposed to reinstate the exception reporting requirement in a modified form on May 1, 1987.

After considering public comments on the proposal, EPA is today promulgating in final form the exception reporting requirement as proposed.

DATE: This regulation applies to hazardous waste shipments by generators of between 100 and 1000 kg of hazardous waste per calendar month initiated after March 23, 1988.

ADDRESSES: The public docket for this rulemaking is located in Room LG-100, U.S. Environmental Protection Agency, 401 M Street, SW., Washington, DC 20460. The EPA RCRA Docket is open from 9:00 a.m. to 4:00 p.m., Monday through Friday, excluding Federal holidays. To review docket materials, the public must make an appointment by calling (202) 475-9327. The docket has been assigned code number F-87-ESQP-FFFFF. A maximum of 50 pages of material may be copied from any regulatory docket at no cost. Additional copies cost $0.20/page.

FOR FURTHER INFORMATION CONTACT: For general information, contact the RCRA/Superfund Hotline, toll free at (800) 424-9346 (in Washington, DC, call 382-3000), or the Small Business Hotline, (800) 368-5888. For information on specific aspects of today's notice, contact Paul Mushovic, Office of Solid Waste (WH-562B), U.S. Environmental Protection Agency, 401 M Street, SW., Washington, DC 20460, (202) 475-7736.

SUPPLEMENTAL INFORMATION:

Preamble Outline

I. Background and Summary
II. Major Comments and EPA's Responses
A. The Need for Exception Reporting
1. General policy for developing standards for small quantity generators
2. Exception reporting as part of the manifest system
3. Usefulness of the exception report in enforcement cases
B. Burdens of Exception Reporting
1. Report preparation and submission
2. Recordkeeping
C. Regulatory Changes and Educational Efforts
D. Requirement to Locate Lost Shipments
III. State Authority
A. Applicability in Authorized States
B. Effect on State Authorizations
IV. Executive Order No. 12291
V. Regulatory Flexibility Act
VI. Paperwork Reduction Act
VII. Supporting Document

I. Background and Summary

On August 1, 1985, the U.S. Environmental Protection Agency (EPA) proposed regulations under the Resource Conservation and Recovery Act (RCRA), as amended by the Hazardous and Solid Waste Amendments of 1984 (HSWA), that would be applicable to generators of between 100 and 1000 kg of hazardous waste in a calendar month ("100–1000 kg/mo generators"). The proposed rules, based in large measure on the existing hazardous waste regulatory program, represented the Agency's efforts to balance the statutory mandate to protect human health and the environment with the statutory directive to keep burdensome regulation of small businesses to a minimum. Among other things, EPA proposed to exempt generators of between 100 and 1000 kg/mo from the full hazardous waste manifest system as well as the requirement to file exception reports. Under the proposed rules, there would have been only a single copy of the manifest; therefore, there would be no manifest copies for return to the generator, and, hence, no basis for exception reporting.

In the final rule issued on March 24, 1986 (see 51 FR 10146), EPA determined that the full, multiple-copy manifest system was necessary to protect public health and the environment and that its use would not impose a significant burden on 100 to 1000 kg/mo generators. See 51 FR 10155-10156. The Agency also concluded, however, that the administrative burden associated with the exception reporting requirement outweighed the incremental environmental benefits that may be gained. See 51 FR 10159-160. Subsequently, on June 6, 1986, the Environmental Defense Fund (EDF) filed a petition in the United States Court of Appeals for the District of Columbia Circuit (Environmental Defense Fund v. Thomas, No. 86-1334) for review of EPA's decision to exempt 100 to 1000 kg/mo generators from the exception reporting requirement. On December 17, 1986, EPA and EDF agreed to defer the litigation pending EPA's reconsideration of the decision made in the final rule and additional rulemaking on the exception reporting exemption.

As a result of EPA's reconsideration of this issue, the Agency proposed to reinstate the exception reporting requirement for generators of between 100 and 1000 kg of hazardous waste per month, but in a modified form designed to reduce any burden associated with the full reporting requirement. (See 52 FR 16158; May 1, 1987.) The Agency also requested comment on a number of alternative approaches to the existing exception reporting requirement that were not considered in the March 24, 1986, rulemaking. The comment period on the May 1, 1987, proposal closed on June 1, 1987.

EPA has reviewed the public comments submitted in response to the May 1 proposal and has decided to promulgate the modified exception reporting rule as proposed. The Agency arrived at this decision based on our conclusion that the modified exception reporting requirement adequately protects human health and the environment without placing undue burdens on small businesses.

The remainder of this preamble discusses the major comments received and the Agency's response to those comments, the applicability of the final rule in authorized and nonauthorized States, and EPA's consideration of impacts, as required by Executive Order No. 12291, the Paperwork Reduction Act, and the Regulatory Flexibility Act.

The reader should note that the sections affected by today's rules (40 CFR 262.42 and 262.44) have been modified slightly from the proposal to clarify the requirements; these changes are nonsubstantive. First, in the May 1 proposal, EPA limited the full exception reporting requirements of § 262.42 (a) and (b) to generators of greater than 1000 kg/mo by adding a new paragraph (c) for generators of between 100 and 1000 kg/mo. In the final rule, we simply condensed old paragraphs (a) and (b) in

§ 262.42 into a new paragraph (a), and placed the requirements for generators of between 100 and 1000 kg/mo in a new paragraph (b) (*i.e.*, now paragraph (a) applies to generators of greater than 1000 kg/mo, and paragraph (b) to generators of between 100 and 1000 kg/mo). Second, EPA has added a "note" to the end of § 262.42(b) to clarify that when a generator of between 100 and 1000 kg of hazardous waste per month must notify EPA of a nonreturned manifest, the notice can be as simple as a handwritten or typed statement on a copy of the subject manifest or on an attached sheet of paper. The preamble of the May 1, 1987, proposal indicated that this was EPA's intent (52 FR 16159), but we now have concluded that a note in the actual regulation will make communication of the intent easier and prevent any confusion over what is actually required. Finally, EPA has amended § 266.44. Previously, this section read that generators of between 100 and 1000 kg/mo are exempt from Part 262, Subpart D, "except for . . . paragraphs (a), (c) and (d) in § 262.40, and . . . §§ 262.42 and 262.43." The "except for" language was somewhat confusing, so § 262.44 now simply lists requirements in the subpart that apply to generators of between 100 and 1000 kg/mo.

II. Major Comments and EPA's Responses

This section of the preamble addresses the major issues raised in comments received on the May 1, 1987, proposal. Any comments not addressed here are addressed in a response-to-comment document available in the public docket.

As an overview, the proposal was generally well received by commenters. Of the 11 comments received, 8 were favorable. In fact, 7 of the 11 commenters stated simply that they agreed with the proposal, *i.e.*, that the modified exception reporting requirement would be beneficial to public health and the environment without causing undue burdens on small businesses. Those commenting favorably included firms representing the chemical and petroleum industries as well as several trade associations representing both large and some small businesses; the other favorable comment was from a State environmental control agency. On the other hand, the National Automotive Dealer's Association (NADA) and the U.S. Small Business Administration (SBA) primarily representing small business, commented that the exception reporting requirements were unnecessary and would impose additional burdens on small business (see discussion below).

A. The Need for Exception Reporting

The National Automotive Dealer's Association (NADA) and the U.S. Small Business Administration (SBA) questioned the need for exception reporting. These commenters argue that very few exception reports have been filed since the requirement was imposed for large quantity generators in 1980, and that when exception reports are filed the cause is usually a clerical error, not an illegal or misdirected shipment. Commenters further claim that State enforcement agencies rarely follow up on reports that do receive, and that any cases brought for illegal waste transport are discovered not through the manifest system, but through other means. NADA and SBA also claim the EPA has not demonstrated exception reporting is necessary to protect human health and environment. NADA further argues that EPA has not met the statutory test of RCRA Section 3001(d), and both NADA and SBA argue that exception reporting is simply an unnecessary burden imposed by EPA on small business. EPA will address the question of burden in Section II.B. The following is EPA's response to the claims that exception reporting is unnecessary to protect human health and the environment.

1. General Policy for Developing Standards for Small Quantity Generators

RCRA section 3001(d) reads that:

> the Administrator shall promulgate standards under sections 3002, 3003, and 3004 for hazardous waste generated by a generator in a total quantity of hazardous waste greater than one hundred kilograms but less than one thousand kilograms during a calendar month.
>
> (2) The standards . . . may vary from the standards applicable to hazardous waste generated by larger quantity generators, but such standards shall be sufficient to protect human health and the environment.

EPA has interpreted section 3001(d) as requiring a balancing between the two competing goals inherent in that section—protecting human health and the environment and avoiding unreasonable burdens on the large number of small businesses affected by the standards. In assuring protection of human health and the environment, the Agency deemed it appropriate and consistent to consider the relative risk posed by the small aggregate amounts of waste generated by the 100 and 1000 kg/mo generators. Given the lower relative risk that these generators pose compared to larger generators in terms of quantity of waste, it is possible that the standards applicable to large quantity generators can be modified while still meeting the statutory criterion that the small generator standards protect human health and the environment.

EPA has determined that retaining the round trip manifest system for small quantity generators is necessary to protect human health and the environment. See 51 FR 10155–56 (March 24, 1986). It has also determined in previous rulemakings that exception reporting provides an important link in the "tracking" function of the round trip manifest system, and therefore, is necessary to protect human health and the environment. (See 45 FR 12731; February 26, 1980.)

EPA is not required by section 3001(d) to reexamine whether each generator standard is necessary to protect human health and the environment; rather, it is directed to vary the standards to the extent possible to reduce unreasonable burdens while still retaining their protectiveness.

Even when viewing small generators' waste as presenting a lower relative risk, EPA is unable to determine that eliminating the exception reporting for these generators would still be protective of human health and the environment. Although EPA made such a finding in the March 24, 1986, final rule, it had failed to consider a number of relevant factors. First, it had failed to consider that the relative risk associated with the illegal disposal of any given shipment of hazardous waste may be the same for large and small quantity generators since transporters often consolidate small quantity shipments for transport to TSD's. Therefore, although the small quantity shipped by a SQG may pose a minimal risk, actual shipping practices which consolidate shipments will increase the risks associated with a lost or illegally disposed of truckload. Second, the Agency failed to consider ways to reduce any unreasonable burdens imposed on small quantity generators by exception reporting while retaining the basic requirement. Under the balancing approach mentioned above, if the requirement can be modified to reduce burdens, there is no authority under section 3001(d) to eliminate a standard that has otherwise been found to be necessary to protect human health and the environment.

As EPA has proposed a means of reducing the burdens of exception reporting while retaining the necessary level of protectiveness (the May 1, 1987, proposal), and is today adopting this proposed mechanism, EPA's action is totally consistent with the statutory

directive. Thus, EPA disagrees with NADA's and SBA's comments.

The remainder of this section goes on to explain in detail that exception reporting is an important part of the hazardous waste manifest system, and discusses the issue of using exception reports in RCRA enforcement cases.

2. Exception Reporting as Part of the Manifest System

SBA argues that the RCRA multiple-copy manifest itself, without exception reporting, is an adequate means to prevent improper transport and disposal. EPA does not agree. As explained below, exception reporting is an important part of the manifest system, and the system is not adequate without some form of exception reporting.

EPA discussed the need for a hazardous waste manifest system, and Congress's intent that EPA institute such a system, on February 26, 1980 (45 FR 12748–12744). In large part, the reader may ascertain Congress' intent from RCRA section 3002(a)(5), in which EPA is directed to:

> . . . establish requirements respecting. . . (5) use of a manifest system and any other reasonable means necessary to assure that all such hazardous waste generated is designated for treatment, storage, or disposal in, *and arrives at*, treatment, storage, or disposal facilities . . . for which a permit has been issued . . . (emphasis added).

That is, the purpose of the manifest is to ensure that hazardous waste is not only designated for, but is actually delivered to a properly permitted facility.

A basic principle supporting the utilization of the hazardous waste system is that the generator of a waste is responsible for ensuring delivery of his waste to a properly permitted facility, and that the generator is the person in the best position to monitor the tracking system to ensure his waste is properly delivered. (Id. at 12728 and 12731.) The failure of a generator to receive a signed and returned copy of the manifest is a signal or warning that a shipment may have been misdelivered or even illegally diverted to an unauthorized facility. The requirement to notify EPA of nonreceipt allows EPA (or State enforcement officials) the opportunity to begin an investigation to determine whether a violation has been committed. Additionally, the knowledge that generators must notify EPA when a manifest is not returned puts transporters and facility owners and operators on notice that manifests must be returned promptly, and so exception reporting helps maintain the manifest as a "self-policing" system. (Id. at 12731.)

3. *Usefulness of the Exception Report in Enforcement Cases*

Both NADA and SBA argue that few, if any, enforcement cases have been brought via exception reporting for large quantity generators, and therefore the requirement is virtually useless. EPA acknowledges that based on the information we have available at this time, it appears that very few enforcement cases for illegal transport or disposal have been initiated via the exception report. However, EPA does not concur with commenters who argue that because exception reporting has apparently resulted in few enforcement cases, EPA should therefore continue to exempt 100 to 1000 kg/mo generators from the requirement. Commenters presented two studies which supposedly support their contentions. It should be noted that the two studies provided by commenters covered only 5 States, but even in examining that limited universe, one study (performed by the U.S. General Accounting Office (GAO), entitled "Illegal Waste Shipments: Difficult to Detect and Deter," Feb. 1985), did identify one enforcement case that was in fact brought as a result of the generator's failure to file an exception report. (See page 27 of the GAO report, footnote 1.)

Further, EPA believes that exception reporting has a deterrent value that is hard to quantify or measure in any study. The knowledge that generators must report the nonreturn of manifest copies acts as a self-policing check between the parties involved.[1] Also, transporters or facility owners or operators who wish to evade regulation must either collude with generators or go to greater lengths to cover their tracks than if exception reporting is not required (e.g., in the GAO report, cases of transporters forging facility operator's signatures were uncovered).

In summary, EPA believes exception reporting is an important part of the manifest system, is sometimes used in enforcement cases, and is necessary for protection of human health and the environment.

B. Burdens of Exception Reporting

As explained in the May 1, 1987, proposal, EPA considered ways in which burdensome requirements could be reduced on 100 to 1000 kg/mo generators while still retaining the protective value provided by an exception reporting mechanism. (52 FR 16159–16160.) The option proposed was a modification of the requirement that applies to large quantity generators. The proposed option varied from the large generator requirement in that when a manifest is not returned, 100 to 1000 kg/mo generators are not required to attempt to locate lost shipments. Further, in lieu of a report to EPA, 100 to 1000 kg/mo generator could simply submit a copy of the unreturned manifest accompanied by a note (either typed or hand written on the manifest itself, or on an attached piece of paper) stating that the return copy was not received from the facility owner or operator. Finally, a 100 to 1000 kg/mo generator would be allowed 60 days before a report is to be submitted to EPA as compared to 45 days allowed for large quantity generators. EPA is adopting the proposed option in today's final rule to reduce any burdens that may be associated with exception reporting.

Most commenters, including several comments from associations representing small quantity generators, agreed that EPA had given due consideration to small business impacts and that the proposed requirements were reasonable. SBA and NADA claimed, however, that the requirements would still impose unreasonable burdens. In response to these comments, the following sections address each aspect of the reporting and recordkeeping burdens associated with the proposal.

1. *Report Preparation and Submission*

EPA estimated that on average a 100 to 1000 kg/mo generator would only initiate between 2 and 4 manifests per year. This is because under the rules promulgated on March 24, 1986, these generators may store waste on-site for up to 180 days (or in some cases 270 days) without a permit.[2] (See 52 FR 16160; May 1, 1987.) EPA further estimated that given such infrequent shipments, an exception report would only be required, on average, once in 10 years. (Id.) EPA estimated the actual cost of preparing and submitting an exception report to be $19 (Id.) The commenters have provided no data to indicate costs would be any higher than

[1] SBA suggested in their comments that EPA should obtain information from States which have been regulating generators of less than 1000 kg/mo previous to EPA's regulation. Presumably, a comparison could be made between States with and without exception reporting to see if there was more illegal disposal in States without. Such a study is impossible to conduct. Due to its very nature, illegal disposal is impossible to accurately measure, so any comparisons between States would be meaningless.

[2] Note that many generators who ship more frequently than this, e.g., vehicle maintenance facilities with spent solvents and spent lead acid batteries, are eligible for an exemption from the entire manifest system under 40 CFR 262.20(e) and 40 CFR Part 266, Subpart G.

these estimates, and given the relative infrequency of the reports and the modified reporting format, EPA concludes that such costs of reporting do not impose significant burdens on small businesses or on small quantity generators in general.

2. *Recordkeeping*

SBA pointed out that 100 to 1000 kg/mo generators would have to keep records to know if a manifest had not been returned within the allowable time frame, and claimed that this would be an unreasonable recordkeeping burden. EPA agrees that the requirement to file an exception report does impose some burden in addition to the burdens already imposed by § 262.40(a), made applicable to 100 to 1000 kg/mo generators on March 24, 1986, under which generators must keep copies of manifests for 3 years. (See 51 FR 10159.) Generators of between 100 to 1000 kg/mo must not only keep copies of manifests they initiate, but must also, under today's rule, be aware of when the return copy is due back and then must match returned copies against originals. EPA does not agree, however, that this is an unreasonable burden. The responsibility of a generator to ensure his waste is actually delivered to a properly permitted facility goes to the heart of the Subtitle C system; this was the intent of the manifest system. EPA expects that most generators, including small businesses, want to be sure their waste is properly delivered, and are likely to track their shipments out of their own interest to avoid liability problems. The rules promulgated today merely codify practices that make good business sense. Finally, the Agency notes that since 100 to 1000 kg/mo generators only initiate on average 2–4 shipments per year, they will typically have only one manifest outstanding at any point in time, so their recordkeeping will not be very complicated.

EPA concludes, in summary, that the burdens associated with today's rule are minimal, and are justified by the need to have the protection afforded by some form of exception reporting. EPA noted above that, first, 100 to 1000 kg/mo generators have relatively few shipments to keep track of, second, that generators keeping track of their shipments is necessary to make the manifest system work (and represents good business practices), and third, that when reports must be filed the costs are minimal due to the special modifications adopted today.

C. Regulatory Changes and Educational Efforts

One commenter, representing small quantity generators, specifically argued that "continual revision" of regulations affecting so many small businesses (i.e., small quantity generators) might adversely affect on-going compliance education programs. The Agency does not intend to continually revise the small quantity generator regulations, but at times some revisions may be necessary and this probably will make EPA's (and State and industry) educational efforts more difficult. Today's rule will not become effective for six months, so small businesses will have time to learn of their new responsibility. Also, today's rule is a minor revision to the current requirements, so major adjustments should not be necessary for most generators. To assist small quantity generators, EPA will prepare and distribute a pamphlet advising small businesses of the change in exception reporting requirements, and will update its handbook for small business, "Understanding the Small Quantity Generator Hazardous Waste Rules," to include the new requirement.

D. Requirement to Locate Lost Shipments

The Environmental Defense Fund (EDF) argued that EPA should require 100 to 1000 kg/mo generators to attempt to locate shipments when a manifest is not returned. (This is presently required of large quantity generators under 40 CFR 262.42(a).) EPA rejected this as a requirement for 100 to 1000 kg/mo generators in its May 1, 1987, proposal but rather encouraged 100 to 1000 kg/mo generators to attempt to locate shipments voluntarily. See 52 FR 16159. EDF further argues such a requirement would not be burdensome, and would only be necessary when something was (at least potentially) amiss.

EPA does not agree that an additional requirement to attempt to locate lost shipments is necessary for 100 to 1000 kg/mo generators. EPA expects that most generators will voluntarily undertake such efforts out of liability concerns and to avoid the need to file an exception report. Further, under RCRA section 3001(d), EPA must carefully consider the impacts of its rules on small businesses. Since requiring locational efforts would be of little value without an accompanying requirement to document those efforts, the requirement to attempt to locate a lost shipment would have the effect of requiring a full exception report to be filed (*i.e.*, documenting efforts taken to locate missing waste). This outcome does not seem consistent with Congressional intent for EPA to reduce paperwork burdens on small quantity generators whenever possible. Therefore, EPA is not imposing a requirement for generators of between 100 and 1000 kg/mo to attempt to locate lost shipments, but the Agency would strongly encourage 100 to 1000 kg/mo generators to attempt to locate a missing manifest or waste shipment on their own to minimize any potential long term liability as well as to avoid the need to file an exception report.

III. State Authority

Today's rules amend the March 24, 1986, rules and are being promulgated under the authority of RCRA section 3001(d). Section 3001(d) was added to RCRA by HSWA, and as explained below, HSWA contains special rules dealing with the applicability of HSWA-related requirements in authorized States, and State authorizations.

A. Applicability in Authorized States

Under Section 3006 of RCRA, EPA may authorize qualified States to administer and enforce their own hazardous waste programs pursuant to Subtitle C. (See 40 CFR Part 271 for the standards and requirements for authorization.) Following authorization, EPA retains enforcement authority under sections 3008, 3013 and 7003 of RCRA, although authorized States have primary enforcement responsibility.

Prior to the Hazardous and Solid Waste Amendments of 1984 (HSWA), a State with final authorization administered its hazardous waste program entirely in lieu of the Federal program. The Federal requirements no longer applied in the authorized State, and EPA could not issue permits for any hazardous waste management facilities which the State was authorized to permit. When new, more stringent Federal requirements were promulgated or enacted, the State was obligated to enact equivalent authority within specified time frames; however, the new Federal requirements did not take effect in an authorized State until the requirements were adopted as State law.

In contrast, under section 3006(g) of RCRA, 42 U.S.C. 6926(g), new requirements and prohibitions imposed by HSWA take effect in authorized States at the same time that they take effect in nonauthorized States. EPA is directed to carry out those requirements and prohibitions in authorized States, including the issuance of permits, until the State is granted authorization to do

so. While States must still adopt HSWA provisions as State law to retain final authorization, the HSWA requirements apply in authorized States in the interim.

Today's final rule is promulgated pursuant to section 3001(d) of RCRA, a provision added by HSWA. Therefore, it is being added to Table 1 in § 271.1(j), which identifies the Federal program requirements that are promulgated pursuant to HSWA and that take effect in all States, regardless of their authorization status. States may apply for either interim or final status for the HSWA provisions identified in Table 1, as discussed in the following section of this preamble.

B. Effect on State Authorizations

As noted above, EPA will implement the standards in authorized States until they revise their programs to adopt these rules and the modification is approved by EPA. Because the rule is promulgated pursuant to HSWA, a State submitting a program modification may apply to receive either interim or final authorization under section 3006(g)(2) or 3006(b), respectively, on the basis of requirements that are substantially equivalent to EPA's. The procedures and schedule for State program modifications for either interim or final authorizaton are described in 40 CFR 271.21. It should be noted that all HSWA interim authorizations will expire January 1, 1993. (See § 271.24(c).)

40 CFR 271.21(e)(2) requires that States that have final authorization must modify their programs to reflect Federal program changes, and must subsequently submit the modifications to EPA for approval. The deadline by which a State must modify its programs to adopt today's rule is July 1, 1991 (or July 1, 1992 if a statutory change is needed.) These deadlines can be extended in certain cases. (See 40 CFR 271.21(e)(3).) Once EPA approves the modification, the State requirements become RCRA Subtitle C requirements.

It should be noted that States with authorized RCRA programs may already have requirements similar to those in today's rule. These State regulations have not been assessed against the Federal regulations being promulgated today to determine whether they meet the tests for authorization. Thus, a State is not authorized to implement these requirements in lieu of EPA until the State program modification is approved. Of course, States with existing standards may continue to administer and enforce them as a matter of State law. In implementing the Federal program, EPA will work with States under cooperative agreements to minimize duplication of efforts. In many cases, EPA will be able to defer to States in their efforts to implement their programs rather than take separate action under Federal authority.

States that submit their official applications for final authorization less than 12 months after the effective date of these standards are not required to include standards equivalent to these standards in their application. However, the State must modify its program by the deadlines set forth in § 271.21(e). States that submit official applications for final authorization 12 months after the effective date of these standards must include standards equivalent to these in their application. 40 CFR 271.3 sets forth the requirements a State must meet when submitting its final authorization application.

IV. Executive Order No. 12291

Under Executive Order No. 12291, EPA must judge whether a regulation is "major" and, therefore, subject to the requirement to perform a Regulatory Impact Analysis. Today's rules would require that 100 to 1000 kg/mo generators report potentially lost shipments of hazardous waste to EPA or the appropriate State authority. However, because of the infrequent need to file such a report and the very low costs involved, I have determined that the rule would not constitute a major rule subject to the Regulatory Impact Analysis requirements of Executive Order No. 12291.

V. Regulatory Flexibility Act

Under the Regulatory Flexibility Act, 5 U.S.C. 601 et seq., EPA must prepare a regulatory flexibility analysis for all rules, unless the Administrator certifies that the rule will not have a significant impact on a substantial number of small entities. Today's rule will affect as many as 100,000 small businesses, but will not result in significantly increased compliance costs for these businesses. This is because an exception report, costing less than $19/report, will most likely only be required, on average, once every 10 years. Further, during a 10-year period, generators would, on average, only have to track 20–40 manifests in total.

Therefore, I hereby certify, pursuant to 5 U.S.C. 601(b), that this final rule will not have a significant impact on a substantial number of small entities.

VI. Paperwork Reduction Act

The information collection requirements contained in this rule have been approved by the Office of Management and Budget (OMB) under the Paperwork Reduction Act of 1980, 44 U.S.C. 3501 *et seq.*, and have been assigned the OMB control number 2050–0039 (Manifest Exception Reporting).

VII. Supporting Document

A background document in which EPA responds to any comments not addressed in this preamble, entitled *Summary and EPA Responses to Public Comments on the May 1, 1987, Proposed Rule Governing Exception Reporting for 100 to 1000 kg/mo Generators of Hazardous Waste*, dated September 1987, is available in the RCRA Docket at EPA (LG–100), 401 M Street, SW., Washington, DC 20460. The docket number for this rulemaking is F–87–ESQP–FFFFF. The docket is open from 9:00 a.m. to 4:00 p.m. Monday through Friday, except for Federal holidays. The public must make an appointment to review docket materials by calling (202) 475–9327. The public may copy a maximum of 50 pages of material from any one regulatory docket at no cost. Additional copies cost $0.20 per page.

List of Subjects

40 CFR Part 262

Hazardous materials transportation, Hazardous waste, Imports, Labeling, Packaging and containers, Reporting and recordkeeping requirements, Waste minimization.

40 CFR Part 271

Administrative practice and procedure, Confidential business information, Hazardous materials transportation, Hazardous waste, Indian lands, Intergovernmental relations, Penalties, Reporting and recordkeeping requirements, Water pollution control, Water supply.

Dated: September 17, 1987.

Lee M. Thomas,

Administrator.

For the reasons set out in the preamble, Title 40 of the Code of Federal Regulations is amended as follows:

PART 262—STANDARDS APPLICABLE TO GENERATORS OF HAZARDOUS WASTE

1. The authority citation for Part 262 is revised to read as follows:

Authority: 42 U.S.C. 6906, 6912, 6922, 6923, 6924, 6925, and 6937.

2. Section 262.42 is revised to read as follows:

§ 262.42 Exception reporting.

(a)(1) A generator of greater than 1000 kilograms of hazardous waste in a calendar month who does not receive a copy of the manifest with the handwritten signature of the owner or

operator of the designated facility within 35 days of the date the waste was accepted by the initial transporter must contact the transporter and/or the owner or operator of the designated facility to determine the status of the hazardous waste.

(2) A generator of greater than 1000 kilograms of hazardous waste in a calendar month must submit an Exception Report to the EPA Regional Administrator for the Region in which the generator is located if he has not received a copy of the manifest with the handwritten signature of the owner or operator of the designated facility within 45 days of the date the waste was accepted by the initial transporter.

The Exception Report must include:

(i) A legible copy of the manifest for which the generator does not have confirmation of delivery;

(ii) A cover letter signed by the generator or his authorized representative explaining the efforts taken to locate the hazardous waste and the results of those efforts.

(b) A generator of greater than 100 kilograms but less than 1000 kilograms of hazardous waste in a calendar month who does not receive a copy of the manifest with the handwritten signature of the owner or operator of the designated facility within 60 days of the date the waste was accepted by the initial transporter must submit a legible copy of the manifest, with some indication that the generator has not received confirmation of delivery, to the EPA Regional Administrator for the Region in which the generator is located.

Note.—The submission to EPA need only be a handwritten or typed note on the manifest itself, or on an attached sheet of paper, stating that the return copy was not received.

(The information requirements in this section have been approved by OMB and assigned control number 2050-0039)

3. Section 262.44 is revised to read as follows:

§ 262.44 Special requirements for generators of between 100 and 1000 kg/mo.

A generator of greater than 100 kilograms but less than 1000 kilograms of hazardous waste in a calendar month is subject only to the following requirements in this Subpart:

(a) § 262.40(a), (c), and (d), recordkeeping;

(b) § 262.42(b), exception reporting; and

(c) § 262.43, additional reporting.

(The information requirements in this section have been approved by OMB and assigned control number 2050-0039)

PART 271—REQUIREMENTS FOR AUTHORIZATION OF STATE HAZARDOUS WASTE PROGRAMS

4. The authority citation for Part 271 is revised to read as follows:

Authority: 42 U.S.C. 6905, 6912(a), and 6926.

5. Section 271.1(j) is amended by adding the following entry to Table 1 in chronological order by date of publication:

§ 271.1 Purpose and scope.

* * * * *

(j) * * *

TABLE 1.—REGULATIONS IMPLEMENTING THE HAZARDOUS AND SOLID WASTE AMENDMENTS OF 1984

Promulgation date	Title of regulation	Federal Register reference	Effective date
*	*	*	*
September 23, 1987.	Exception Reporting for Small Quantity Generators of Hazardous Waste.	52 FR.....	March 23, 1988.
*	*	*	*

[FR Doc. 87-21940 Filed 9-22-87; 8:45 am]
BILLING CODE 6560-50-M

federal register

Wednesday
September 23, 1987

Part VII

Department of Education

Perkins Loan, College Work Study, Supplemental Educational Opportunity Grant and Guaranteed Student Loan Programs; Notice

DEPARTMENT OF EDUCATION

Perkins Loan (Formerly National Direct Student Loan), College Work-Study, Supplemental Educational Opportunity Grant and Guaranteed Student Loan Programs

AGENCY: Department of Education.

ACTION: Notice of procedures for certification of need analysis servicers' systems and notice of closing dates for requesting and returning agreements and transmittal of information.

SUMMARY: The Secretary of Education is informing individuals and organizations that operate need analysis systems (need analysis servicer) that the Secretary will enter into an agreement with a need analysis servicer under which the need analysis servicer's system would become a certified system. If an institution uses a certified need analysis system in the calculation of an expected family contribution for the 1988–89 academic year under the Perkins Loan, College Work-Study (CWS), Supplemental Educational Opportunity Grant (SEOG) (known collectively as the campus-based programs) and Guaranteed Student Loan (GSL) Programs, the institution can be assured that the expected family contribution produced by the system will accurately reflect the expected family contribution described in Title IV, Part F, of the Higher Education Act of 1965, as amended (HEA). A need analysis servicer may also agree to incorporate Department of Education (ED) specifications and edits, and/or to select applicants for verification.

FOR FURTHER INFORMATION CONTACT: Margaret O. Henry, Division of Policy and Program Development, Office of Student Financial Assistance, Department of Education, 400 Maryland Avenue, SW., Room 4018, ROB-3, Washington, DC 20202, Telephone (202) 732-4490. For information regarding the specification package contact: Paul Hill or Dan Madzelan, Telephone (202) 732-3963.

SUPPLEMENTARY INFORMATION:

Program Information

The campus-based and Guaranteed Student Loan programs are "need-based" student financial aid programs. In order to award financial aid under each program, an institution must determine whether a student has financial need. The institution determines a student's financial need by subtracting from the student's educational cost his or her expected family contribution, i.e., the amount the student, his or her spouse and, in the case of a dependent student, his or her parents, may reasonably be expected to contribute toward his or her educational costs.

Part F of Title IV of the Higher Education Act of 1965 (HEA), after its amendment by the Higher Education Amendments of 1986, provides detailed formulas for determining a student's expected family contribution for the campus-based and GSL programs. The statutory formulas specify the criteria, data elements and tables for schedules of expected family contributions for these programs.

As authorized by the HEA and as a service to institutions, the Secretary will certify that an expected family contribution produced by an individual's or organization's system is consistent with the calculation prescribed by Title IV-F of the HEA. To accomplish the certification process with a minimal disruption to the existing institutional practices of awarding financial aid, the Secretary has developed four levels of participation in the certification process. These four levels are described as follows:

Each need analysis servicer whose system is certified by the Secretary is able to calculate an expected family contribution under Title IV-F of the HEA when an applicant provides all the data elements necessary for that calculation in a complete and consistent manner. A need analysis servicer that is able only to perform this function may have its system certified at Level 1.

Under Level 2, the need analysis servicer is able to perform the function described under Level 1 and select applicants for verification under ED instructions for that selection.

Under Level 3, the need analysis servicer is able to perform the function described under Level 1 and calculate an expected family contribution under Title IV-F of the HEA, even when an applicant provides incomplete and inconsistent data, through the use of ED edits.

Under Level 4, the need analysis servicer is able to perform the function described under Level 1 and calculate an expected family contribution under Title IV-F of the HEA even when an applicant provides incomplete and inconsistent data through the use of ED edits and is able to select applicants for verification under ED instructions for that selection.

The following table summarizes characteristics of each participation level:

Characteristics Table			
	Able to Calculate Expected Family Contribution (EFC) When Applicant Information is Complete and Consistent	Able to Incorporate Verification Selection Criteria	Able to Incorporate ED Edits for Incomplete or Inconsistent Information in Calculation of Expected Family Contribution (EFC)
Formula Level 1	Yes	No	No
Formula and Verification Level 2	Yes	Yes	No
Formula and Edits Level 3	Yes	No	Yes
Formula, Edits, and Verification Level 4	Yes	Yes	Yes

This notice describes below the procedures that must be followed by need analysis servicers to have their systems certified by the Secretary. The Secretary will subsequently publish other notices in January 1988 and March 1988 listing those need analysis servicers that have completed that process and whose systems have been certified.

Certification Procedural Requirements

In order to have its system certified by the Secretary, a need analysis servicer must enter into an agreement with the Secretary and follow the procedural steps below:

Step 1: The need analysis servicer requests an agreement from ED. The request must be in writing and either hand-delivered or mailed to the address indicated below.

Step 2: After ED receives a request, it provides an agreement package to the need analysis servicer. The agreement package contains information that will enable the need analysis servicer to determine whether it wishes its system to become certified and will enable the need analysis servicer to choose one of four levels of participation.

Step 3: A need analysis servicer selects its participation level by indicating that level on the agreement and returning its signed agreement to ED.

Step 4: Following submission of the signed agreement to ED, ED provides the need analysis servicer with the appropriate software development package based on the participation level selected.

Step 5: Test cases will then be transmitted to need analysis servicers at a date agreed upon between the Department and the need analysis servicer. The complexity and number of the test cases depend on the participation level the need analysis servicer has selected. (A test case is a discrete set of hypothetical applicant data which is used to test the accuracy and adequacy of a computer function and the need analysis servicer's implementation of Title IV, Part F of the HEA. A single test case may test one or more specific input, process, or output functions. An aggregate of test cases may test a particular computer process, computer run, process cycle, subsystem, or total system process.) ED will send test cases and additional information to the need analysis servicer signing the agreement, providing instructions for submitting the results of processing the test cases to ED. Each set of test cases is designed to provide evidence that will indicate the need analysis servicer's ability to actually perform operational functions at the particular level of service selected. A need analysis servicer will be given a choice of receiving its test cases by hard copy, floppy disk, or magnetic tape.

Step 6: A need analysis servicer processes all the test cases provided it and submits the results of the test cases to ED by December 14, 1987. If there are deficiencies in the test case results, these must be resolved to the satisfaction of ED by January 6, 1988 in order for that need analysis servicer to be included in the list of certified need analysis servicers that the Secretary will publish in the **Federal Register** in January 1988.

If the submission date of December 14, 1987 is not met, results of the test cases must be submitted by the need analysis servicers to ED by February 1, 1988 with deficiencies in the test case results resolved to the satisfaction of ED by March 15, 1988 in order for the need analysis servicer to be included in the list of certified need analysis servicers that the Secretary will publish in the **Federal Register** in March 1988.

A need analysis servicer will be given a choice of submitting its processed test case data and system generated results by hard copy, floppy disk or magnetic tape.

Requesting Agreements

The deadline for requesting the agreement is October 16, 1987. Agreements must be requested in writing. The request must be addressed or hand-delivered to the Department of

Education, Office of Student Financial Assistance, Division of Policy and Program Development, Campus and State Grant Branch, 400 Maryland Avenue, SW., (Room 4018, Regional Office Building 3), Washington, DC 20202.

Submission of Agreements

All agreements must be signed and mailed or hand-delivered to the Department of Education by November 12, 1987.

Agreements Delivered by Mail

Agreements delivered by mail must be addressed to the Department of Education, Office of Student Financial Assistance, Division of Policy and Program Development, Campus and State Grant Branch, 400 Maryland Avenue, SW., (Room 4018, Regional Office Building 3), Washington, DC 20202.

A need analysis servicer must show proof of mailing the agreement. Proof of mailing consists of one of the following: (1) A legible mail receipt with the date of mailing stamped by the U.S. Postal Service, (2) a legibly dated U.S. Postal Service postmark, (3) a dated shipping label, invoice, or receipt from a commercial carrier, or (4) any other proof of mailing acceptable to the U.S. Secretary of Education.

If agreements are forwarded using the U.S. Postal Service, the Secretary does not accept either of the following as proof of mailing: (1) A private metered postmark, or (2) a mail receipt that is not dated by the U.S. Postal Service. A need analysis servicer should note that the U.S. Postal Service does not uniformly provide a dated postmark. Before relying on this method, confirmation should be obtained from the local post office. A need analysis servicer is encouraged to use certified or, at least, first-class mail.

Agreements Delivered by Hand

Agreements that are hand-delivered must be taken to the Department of Education, Office of Student Financial Assistance, Division of Policy and Program Development, Campus and State Grant Branch, 7th and D Streets, SW., Room 4018, Regional Office Building 3, Washington, DC 20202.

Hand-delivered agreements will be accepted between 8:00 a.m. and 4:30 p.m. daily (Washington, DC time), except Saturdays, Sundays and Federal holidays. Agreements delivered by hand will not be accepted after 4:30 p.m. on the closing date.

Submission of Test Case Results

A need analysis servicer may choose to submit its test results data by—

(1) Submitting the processed test case data and its (the system's) generated results on hard copy;

(2) Submitting the processed test case data and generated results on floppy disks; or

(3) Submitting the processed test case data and generated results on a magnetic tape from data stored on a mainframe computer.

Regardless of which method is used for submitting test case results, need analysis servicers must submit data in accordance with the ED instructions.

Test Case Results Delivered by Mail

Test case results delivered by mail must be addressed to the Department of Education, Office of Student Financial Assistance, Division of Policy and Program Development, Campus and State Grant Branch, 400 Maryland Avenue, SW., (Room 4004, Regional Office Building 3), Washington, DC 20202.

A need analysis servicer must show proof of mailing the test case results. Proof of mailing consists of one of the following: (1) A legible mail receipt with the date of mailing stamped by the U.S. Postal Service, (2) a legibly dated U.S. Postal Service postmark (3) a dated shipping label, invoice, or receipt from a commercial carrier, or (4) any other proof of mailing acceptable to the U.S. Secretary of Education.

If test case results are forwarded using the U.S. Postal Service, the Secretary does not accept either of the following as proof of mailing: (1) A private metered postmark, or (2) a mail receipt that is not dated by the U.S. Postal Service. A need analysis servicer should note that the U.S. Postal Service does not uniformly provide a dated postmark. Before relying on this method, confirmation should be obtained from the local post office. A need analysis servicer is encouraged to use certified or, at least, first-class mail.

Test Case Results Delivered by Hand

Test case results that are hand-delivered must be taken to the Department of Education, Office of Student Financial Assistance, Division of Policy and Program Development, Campus and State Grant Branch, 7th and D Streets, SW., Room 4004, Regional Office Building 3, Washington, DC 20202.

Hand-delivered test case results will be accepted between 8:00 a.m. and 4:30 p.m. daily (Washington, DC time), except Saturdays, Sundays and Federal holidays. Test case results delivered by hand will not be accepted after 4:30 p.m. on the closing date.

The Secretary plans to publish two notices listing systems that are certified. These notices are expected to be published in the **Federal Register** in January 1988 and March 1988. To ensure consideration for publication in the January 1988 notice, all test case results must be submitted by December 14, 1987 and all discrepancies resolved and approved by the Secretary by January 6, 1988. To ensure consideration for publication in the March 1988 notice, all test case results must be submitted by February 1, 1988 and all discrepancies resolved and approved by the Secretary by March 15, 1988.

Closing Dates

1. Deadline date to request agreement—October 16, 1987.

2. Deadline date to submit agreement to ED—November 12, 1987.

3. Deadline date to submit test case results to ED for January 1988 notice—December 14, 1987.

4. Deadline date to resolve test case results for January 1988 notice—January 6, 1988.

5. Deadline date to submit test case results to ED for March 1988 notice—February 1, 1988.

6. Deadline date to resolve test case results for March 1988 notice—March 15, 1988.

(Catalog of Federal Domestic Assistance No. 84.038, National Direct Student Loan Program; 84.033, College Work-Study Program; 84.007, Supplemental Educational Opportunity Grant Program; and 84.032, Guaranteed Student Loan Program)

Dated: September 18, 1987.

C. Ronald Kimberling,

Assistant Secretary for Postsecondary Education.

[FR Doc. 87-21946 Filed 9-22-87; 8:45 am]

BILLING CODE 4000-01-M

Reader Aids

Federal Register

Vol. 52, No. 184

Wednesday, September 23, 1987

INFORMATION AND ASSISTANCE

SUBSCRIPTIONS AND ORDERS

Subscriptions (public)	202-783-3238
Problems with subscriptions	275-3054
Subscriptions (Federal agencies)	523-5240
Single copies, back copies of FR	783-3238
Magnetic tapes of FR, CFR volumes	275-1184
Public laws (Slip laws)	275-3030

PUBLICATIONS AND SERVICES

Daily Federal Register

General information, index, and finding aids	523-5227
Public inspection desk	523-5215
Corrections	523-5237
Document drafting information	523-5237
Legal staff	523-4534
Machine readable documents, specifications	523-3408

Code of Federal Regulations

General information, index, and finding aids	523-5227
Printing schedules and pricing information	523-3419

Laws	523-5230

Presidential Documents

Executive orders and proclamations	523-5230
Public Papers of the President	523-5230
Weekly Compilation of Presidential Documents	523-5230

United States Government Manual	523-5230

Other Services

Library	523-5240
Privacy Act Compilation	523-4534
TDD for the deaf	523-5229

FEDERAL REGISTER PAGES AND DATES, SEPTEMBER

32907-33216.....1
33217-33398.....2
33399-33570.....3
33571-33796.....4
33797-33914.....8
33915-34192.....9
34193-34372.....10
34373-34616.....11
34617-34760.....14
34761-34890.....15
34891-35058.....16
35059-35214.....17
35215-35394.....18
35395-35522.....21
35523-35678.....22
35679-35904.....23

CFR PARTS AFFECTED DURING SEPTEMBER

At the end of each month, the Office of the Federal Register publishes separately a List of CFR Sections Affected (LSA), which lists parts and sections affected by documents published since the revision date of each title.

1 CFR

456.....34373

3 CFR

Proclamations:

5697.....34193
5698.....34195
5699.....34197
5700.....34199
5701.....34761
5702.....35523
5703.....35525
5704.....35527

Executive Orders:

8248 (Amended by EO 12608).....34617
8512 (Amended by EO 12608).....34617
8744 (Revoked by EO 12608).....34617
9094 (Amended by EO 12608).....34617
9830 (Amended by EO 12608).....34617
9979 (Amended by EO 12608).....34617
10289 (Amended by EO 12608).....34617
10484 (Amended by EO 12608).....34617
10499 (Amended by EO 12608).....34617
10521 (Amended by EO 12608).....34617
10530 (Amended by EO 12608).....34617
10582 (Amended by EO 12608).....34617
10608 (Amended by EO 12608).....34617
10624 (Amended by EO 12608).....34617
10786 (Amended by EO 12608).....34617
10797 (Amended by EO 12608).....34617
10840 (Amended by EO 12608).....34617
10841 (Amended by EO 12608).....34617
10880 (Revoked by EO 12608).....34617
10903 (Amended by EO 12608).....34617
10909 (Amended by EO 12608).....34617
11012 (Amended by EO 12608).....34617
11023 (Amended by EO 12608).....34617
11030 (Amended by EO 12608).....34617
11034 (Amended by EO 12608).....34617
11044 (Amended by EO 12608).....34617
11047 (Amended by EO 12608).....34617
11060 (Amended by EO 12608).....34617
11077 (Amended by EO 12608).....34617
11079 (Amended by EO 12608).....34617
11140 (Amended by EO 12608).....34617
11157 (Amended by EO 12608).....34617
11377 (Revoked by EO 12608).....34617
11390 (Amended by EO 12608).....34617
11440 (Amended by EO 12608).....34617
11467 (Amended by EO 12608).....34617
11480 (Amended by EO 12608).....34617
11490 (Amended by EO 12608).....34617
11561 (Amended by EO 12608).....34617
11580 (Amended by EO 12608).....34617
11583 (Amended by EO 12608).....34617
11609 (Amended by EO 12608).....34617
11623 (Amended by EO 12608).....34617
11644 (Amended by EO 12608).....34617
11687 (Amended by EO 12608).....34617
11747 (Amended by EO 12608).....34617
11755 (Amended by EO 12608).....34617
11758 (Amended by EO 12608).....34617
11776 (Amended by EO 12608).....34617
11800 (Amended by EO 12608).....34617
11845 (Amended by EO 12608).....34617
11880 (Amended by EO 12608).....34617
11899 (Amended by EO 12608).....34617
11911 (Revoked by EO 12608).....34617
11990 (Amended by

EO 12608)....34617
12034 (Revoked by EO 12608)....34617
12048 (Amended by EO 12608)....34617
12049 (Amended by EO 12608)....34617
12086 (Amended by EO 12608)....34617
12101 (Amended by EO 12608)....34617
12138 (Amended by EO 12608)....34617
12146 (Amended by EO 12608)....34617
12154 (Amended by EO 12608)....34617
12163 (Amended by EO 12608)....34617
12196 (Amended by EO 12608)....34617
12208 (Amended by EO 12608)....34617
12295 (Revoked by EO 12608)....34617
12322 (Amended by EO 12608)....34617
12328 (Amended by EO 12608)....34617
12426 (Revoked by EO 12608)....34617
12606....34188
12607....34190
12608....34617

Administrative Orders:

Memorandums:
August 27, 1987....33397

5 CFR

752....34623
890....34625
930....34201

Proposed Rules:

551....34657
1260....35722
1261....35722

7 CFR

2....33571
12....35194
27....35215
28....35215
53....35679
54....35679
61....35215
272....35221
277....35221
301....32907, 33218, 35059, 35350
418....34626
419....34627
427....34628
429....34629
439....34630
725....35227
726....35227
905....33217
910....33224, 33572, 34631, 35395
987....35529
1004....34763
1079....33915
1137....35395
1250....33903
1957....35518

Proposed Rules:

210....32930
226....35105
245....33834
246....35264
301....35105
401....34658-34667, 34671, 34673, 34809, 35266
413....33941
420....34670
421....34674
423....32931
424....35269
431....32932
432....33942
438....34675
448....35270
724....33943
945....33833
981....34676
1068....33943
1136....32933
1139....32933
1942....32933
1951....32933, 32935
1955....32933
1965....32935

8 CFR

204....33797
245....34764

Proposed Rules:

1....35271

9 CFR

78....33798, 34207
91....33573
92....35230
93....35350
94....33800
99....35350
166....34208

Proposed Rules:

85....34391
92....34456, 35271
94....34677

10 CFR

20....33916
50....34884
456....34138
458....34138
961....35356

Proposed Rules:

50....34223
73....33420
600....35111

11 CFR

100....35530
110....35530

12 CFR

202....35537
221....35683
303....35396
308....35396
310....34208
346....34209
522....33399
563....33399
592....33399
700....34891
705....34981
706....35060
790....35231

Proposed Rules:

Ch. V....33595
226....33596, 34811
332....35724

13 CFR

101....35411
105....34895

Proposed Rules:

107....33598

14 CFR

21....34744
23....34744
36....34744
39....32912, 32913, 33224, 33227, 33228, 33917, 33918, 34631, 34632, 34896, 34899, 35232, 35233, 35683, 35689
43....34096, 35234
45....34096, 35234
71....32914, 32915, 33680, 33919, 34210, 34457, 34900, 34901, 35388
73....35234, 35235
75....35235, 35236, 35693, 35694
91....34096, 34744, 35234
95....34374
97....34902
135....34744
234....34056, 34077
255....34056
1204....35538

Proposed Rules:

Ch. I....35272
21....33246
23....33246
39....32937, 33947-33952, 34225-34228, 35273, 35725-35729
71....34230, 34606, 34682, 34683
91....35052
217....34889
241....34889

15 CFR

372....34211
373....33919
374....34212
375....34212
399....33919, 34213, 35538

Proposed Rules:

806....34685
971....34748

16 CFR

5....34764
13....33921, 34213, 34766, 35412, 35413
455....34769

17 CFR

1....34633
202....33796

Proposed Rules:

1....33680
200....35115

18 CFR

2....35539
11....33801
35....35695
284....35539

Proposed Rules:

2....33756, 33766
154....35117
157....35117
260....35117
284....33756, 33766, 35117
1301....34343

19 CFR

101....35062

Proposed Rules:

113....35274

20 CFR

404....33316, 33921
416....33921, 34772, 35187, 35836
602....33520, 34343

Proposed Rules:

416....34813

21 CFR

10....35063
58....33768
81....33573
177....32916, 33574, 33802, 35540
178....33929, 34047, 35541
193....34903
310....34047
331....33576
341....34047, 35610
369....34047
510....32917
520....34637
540....32917
558....33803, 33930, 35518
561....34903
872....34456
886....33346
888....33686

Proposed Rules:

133....35426, 35435
189....33952
193....35730
201....35610
310....35610
341....35610
352....33598
369....35610
872....34047, 34343
886....33366
888....33714

23 CFR

658....35064
752....34638

Proposed Rules:

1204....33422
1205....33422

24 CFR

17....35413
201....33404, 34903
203....33680, 34903
215....34108
232....35067
234....33680, 33804, 34903
235....35067
236....34108
813....34108
882....34108
888....34118, 34904
912....34108
913....34108
3280....35542

25 CFR

211....35702

212 ... 35702
225 ... 35702
Proposed Rules:
38 ... 33382

26 CFR
1 ... 33577, 33808, 33930, 35414
31 ... 33581, 34354
41 ... 33583
48 ... 34344
301 ... 34354
602 ... 33583, 34354
Proposed Rules:
1 ... 33427, 33836, 34230, 34392, 34580, 35278, 35438, 35447
5h ... 33953
31 ... 34230, 34358
41 ... 33602
55 ... 33953
301 ... 34230, 34358
602 ... 34358, 35278

27 CFR
47 ... 34381
Proposed Rules:
4 ... 33603
5 ... 33603
7 ... 33603
9 ... 34924, 34927

28 CFR
2 ... 33407, 33408
16 ... 33229, 34214
51 ... 33409
602 ... 35543
Proposed Rules:
2 ... 33431, 33433, 34392
20 ... 34242
50 ... 34242
541 ... 34343

29 CFR
697 ... 35415
1601 ... 34215
1625 ... 33809
1910 ... 34460
1952 ... 34381, 35068
2582 ... 35864
2619 ... 34773
2676 ... 34774
Proposed Rules:
505 ... 35447
1910 ... 35731
1915 ... 35731
1917 ... 35731
1918 ... 35731
2550 ... 33508
2616 ... 33318
2617 ... 33318

30 CFR
46 ... 33234
47 ... 33234
Proposed Rules:
57 ... 33956
202 ... 33247, 35451
203 ... 33247, 35451
206 ... 33247, 35451
207 ... 33247, 35451
210 ... 33247, 35451
241 ... 33247, 35451
250 ... 35559
750 ... 34394
842 ... 34050
843 ... 34050
901 ... 34929
914 ... 35733, 35734
916 ... 34930
917 ... 34932
931 ... 33956
934 ... 35735

31 CFR
16 ... 35071
103 ... 35544, 35545
550 ... 35548
Proposed Rules:
103 ... 35562

32 CFR
59 ... 34215
165 ... 34639
199 ... 32992, 34775
368 ... 35417
706 ... 35237
728 ... 33718

33 CFR
3 ... 33809
67 ... 33809
80 ... 33809
100 ... 33809
110 ... 33809
117 ... 33812
147 ... 33809
150 ... 33809
161 ... 33585, 33809
162 ... 33809
165 ... 33809, 34905, 35080
166 ... 33587, 33809
167 ... 33587, 33809
177 ... 33809
207 ... 34775
241 ... 35872
Proposed Rules:
110 ... 34815
117 ... 33434, 33836, 34686
162 ... 34933
165 ... 33435, 33436, 34687 34816
241 ... 34934

34 CFR
326 ... 34368
602 ... 33908
603 ... 33908

36 CFR
1 ... 35238
2 ... 35238
5 ... 35238
7 ... 34776, 34777
701 ... 34383
903 ... 34384
1220 ... 34134
1228 ... 34134
Proposed Rules:
251 ... 33837, 33839
404 ... 33957
1190 ... 34955

37 CFR
Proposed Rules:
1 ... 34080

38 CFR
3 ... 34906
21 ... 35240
36 ... 34217, 34910
Proposed Rules:
4 ... 35610
13 ... 33248

39 CFR
10 ... 33409
111 ... 34778
Proposed Rules:
20 ... 34816
111 ... 34243

40 CFR
52 ... 32918, 33590, 33592, 33933, 34384, 35081, 35703, 35704
60 ... 33316, 33934, 34639, 34868, 35083-35091
61 ... 35084-35092
136 ... 33542
180 ... 33236, 33238, 33903, 33935, 34910-34913, 35705
228 ... 34218
262 ... 35894
270 ... 23936, 34779
271 ... 35556, 35894
305 ... 33812
306 ... 33812
795 ... 32990
798 ... 34654
799 ... 32990, 35706
Proposed Rules:
22 ... 33960
24 ... 33960
50 ... 34243
52 ... 33250, 33252, 33437, 33840, 34243, 35279
62 ... 33605
80 ... 33438
86 ... 33438, 33560
124 ... 35838
133 ... 35210
136 ... 33547
180 ... 33903, 34343
261 ... 33439, 35279
264 ... 35838
270 ... 35838
271 ... 35452
300 ... 33446
600 ... 33438
721 ... 33606
761 ... 33680, 35350

41 CFR
Proposed Rules:
201-21 ... 35736
201-23 ... 35736
201-38 ... 35736
201-39 ... 35736
201-41 ... 35736

42 CFR
36 ... 35044
405 ... 33034, 35350
412 ... 33034, 33168, 35350
413 ... 32920, 33034, 35350
466 ... 33034, 35350
Proposed Rules:
59 ... 33209
405 ... 34244
410 ... 34244

43 CFR
4 ... 35557
2800 ... 34456
Public Land Orders:
6649 (corrected by PLO 6657) ... 33239
6653 ... 32990
6657 ... 33239
Proposed Rules:
2620 ... 35119
3160 ... 33247, 35451

44 CFR
5 ... 33410
59 ... 33410
60 ... 33410
64 ... 35241
361 ... 33814
Proposed Rules:
5 ... 33960

45 CFR
74 ... 33239
Proposed Rules:
95 ... 35454
205 ... 35454
233 ... 34343
302 ... 34689
303 ... 34689
305 ... 34689
307 ... 35454

46 CFR
581 ... 33936
Proposed Rules:
25 ... 33448
38 ... 33841
54 ... 33841
98 ... 33841
151 ... 33841

47 CFR
36 ... 32922
67 ... 32922
73 ... 33240-33243, 33593, 34781, 34914
76 ... 32923
80 ... 35243, 35246
Proposed Rules:
Ch. I ... 33962
1 ... 35737
36 ... 32937
63 ... 34818
67 ... 32937
73 ... 33253-33256, 33609, 33610, 34259, 34260, 34818, 35737
80 ... 33610
90 ... 35281

48 CFR
1 ... 35612
15 ... 35612
30 ... 35612
31 ... 35612
52 ... 35612
203 ... 34386, 34781
204 ... 34781
205 ... 34781
206 ... 34781
207 ... 34781
208 ... 33411, 34781, 34866
209 ... 34386
210 ... 34781
213 ... 33413, 34781
214 ... 34781
215 ... 34781
217 ... 33415, 34781
222 ... 34781
225 ... 34781
233 ... 34781

244....34781
245....34781
252....34386, 34781
253....33413
507....35092
519....34387
552....35092
553....34387
571....33416
1801....34790
1802....34790
1803....34790
1804....34790
1805....34790
1810....34790
1812....34790
1813....34790
1815....34790
1816....34790
1822....34790
1823....34790
1832....34790
1842....34790
1845....34790
1847....34790
1852....34790
1870....34790
2801....34389
2806....34389
2808....34389
2809....34389
2827....34389
2834....34389
2852....34389

Proposed Rules:
Ch. 53....34692
31....35191
209....33450
225....33450
252....33450

49 CFR

192....32924
383....32925
543....33821
571....33416, 34654, 35709
1181....33418
1207....33418
1244....33418
1249....33418
1313....33419

Proposed Rules:
171....35464
172....33611, 33906, 35464
173....33906, 35464
174....33906, 35464
175....33906, 35464
176....33906, 35464
177....33906, 35464
178....33906, 35464
179....33906, 35464
571....35740, 35741
1002....34818
1039....33257

50 CFR

17....32926, 34914, 35034, 35366
20....35248
26....35710
285....34655
301....33831
604....35717
611....33593
641....35717
642....33594, 35720
651....35093
653....34918
661....33244, 34807, 35263
663....33593
672....35424, 35721
675....33245, 34656

Proposed Rules:
17....32939, 33849, 33850, 33980, 34396, 34966, 35282
20....35563
23....35710
611....32942
644....35119
650....35464
675....32942

LIST OF PUBLIC LAWS

Note: No public bills which have become law were received by the Office of the Federal Register for inclusion in today's **List of Public Laws.**

Last List August 31, 1987